AGENDA
CITY OF EL CENTRO
CITY COUNCIL
TUESDAY, NOVEMBER 5, 2024

City Hall | **Regular Meeting** | **11:30 AM**

REVISED

CITY HALL
COUNCIL CHAMBERS
1275 MAIN STREET
EL CENTRO, CA 92243

The public may attend in person. Any member of the public attending in person and wishing to make a comment is asked to complete a speaker slip and follow the instructions below regarding "Notice to the Public". Any member of the public is invited to submit public comments in advance of the meeting to be answered at the meeting. Please email your questions to CityClerk@cityofelcentro.org or call 760-337-4515 by November 5, 2024.

COUNCIL MEMBERS, STAFF AND THE PUBLIC MAY ATTEND VIA ZOOM.

To participate and make a public comment in person, via Zoom or telephone, please raise your hand, speak up and introduce yourself.

Join Zoom Meeting:

https://us06web.zoom.us/j/4180375132?pwd=Rmo5UjZ1cWdyV1VoWUhSZWp6R0tVZz09&omn=87475003140

Optional dial-in number: **1 (669) 444-9171**
Meeting ID: **418 037 5132** Passcode: **5iHJYM**

Public comments via zoom are subject to the same time limits as those in person.

Mayor and Council Members may be reached at (760) 336-8989

Mayor:	**Sylvia Marroquin**	**City Manager: Cedric Ceseña**
Interim Mayor Pro-tem:	**Martha Cardenas-Singh**	**City Attorney: Elizabeth Martyn Evans**
Council Members:	**Tomás Oliva**	**City Clerk: Norma Wyles**
	Sonia Carter	
	Edgard Garcia	

11:30 AM CLOSED SESSION - CONFERENCE ROOM "A":
ROLL CALL (Open Session)

CLOSED SESSION COMMENT:

Any member of the public wishing to address the City Council on any matter appearing on the closed session agenda may do so at this time. Unless the Mayor extends the time limit, remarks shall be limited to three (3) minutes. Additional opportunities for Public Comments will be given during and at the end of the meeting.

CITY COUNCIL ADJOURNS INTO CLOSED SESSION:

CITY COUNCIL CLOSED SESSION:

PUBLIC EMPLOYEE APPOINTMENT - pursuant to Govt. Code Section 54957
Position Title: Interim City Manager
CONFERENCE WITH LABOR NEGOTIATOR - pursuant to Govt. Code Section 54957.6
Agency representatives: City Manager or Interim City Manager; Dulce Bedlolla, Human Resources Director and Patrick Clark, Consultant
Negotiating with: All bargaining units and unrepresented employees
Under negotiation: Salaries and fringe benefits
CONFERENCE WITH REAL PROPERTY NEGOTIATORS - pursuant to Govt. Code Section 54956.8
Property: Portion of the Old Library space
Agency negotiator: Abraham Campos, Public Works Director
Negotiating Party: ICOE
Under Negotiations: Price and Terms
CONFERENCE WITH LEGAL COUNSEL - Anticipated Litigation by the City pursuant to Govt. Code Section 54956.9(d)(4).
CLOSED SESSION PURSUANT TO GOVT. CODE SECTION 54956.9(d)(2) - claims by John Seaman

NOTICE TO THE PUBLIC

This is a public meeting. If there is an item on the agenda on which you wish to be heard, you are asked to complete a blue speaker slip and submit it to the City Clerk prior to the start of the meeting. **Persons wishing to address the Council are not required to identify themselves (Gov't Code § 54953.3); however, this information assists the Mayor by ensuring that all persons wishing to address the Council are recognized and also assists the City Clerk in preparing the City Council meeting minutes.** When the item is announced and your name is called by the Mayor, please step to the podium and state your name for the record. Unless the Mayor extends the time, there is a three (3) minute time limit for each public presentation. If you wish to address the Council concerning any other matter not appearing on the agenda, you may do so during the public comment portion of the agenda. **However, you may not show a visual presentation without review of that material. If you do so, you will be considered out of order.**

* Any information provided on the "Speaker Slip" is voluntary and will be public record

RECONVENE FOR OPEN SESSION 6:00 P.M.

6:00 PM OPEN SESSION

ALL TIMES ARE APPROXIMATE AND MAY VARY:

CALL TO ORDER:

ROLL CALL BY CITY CLERK:

PLEDGE OF ALLEGIANCE:

INVOCATION:

6:05-6:10 PM CITY ATTORNEY REPORT ON CLOSED SESSION:

6:10-6:15 PM (TIME MAY VARY) PUBLIC COMMENTS:

The City Council welcomes your input. At this time, members of the public may address the City Council on any matter not listed on the posted agenda. Pursuant to the Brown Act, no action will be taken on any issue brought forth under Public Comments. We ask that you please complete a "Speaker Slip" and submit it to the City Clerk prior to the start of the meeting. Although you are not required to identify yourself (Gov't Code §54953.3); this information on the "Speaker Slip" assists the Mayor so that all persons wishing to address the Council are recognized and also assists the City Clerk in preparing the City Council meeting minutes. Unless the Mayor extends the time, there is a three (3) minute time limit for each public presentation. *Any information provided on the "Speaker Slip" is voluntary and will be public record.

6:15-6:20 PM PRESENTATIONS AND ANNOUNCEMENTS BY MAYOR:

1. Proclamation - National Law Enforcement Records and Support Personnel Appreciation Week, November 11-15, 2024

6:20-6:25 PM CONSENT AGENDA (ITEMS 2-8):

2. 2nd Reading and Adoption of Ordinance No. 24-04, AN UNCODIFIED ORDINANCE OF THE CITY COUNCIL OF THE CITY OF EL CENTRO APPROVING THE SECOND RENEWAL OF ORDINANCE NO. 22-06 REGARDING THE CONTINUING USE OF ANNUAL MILITARY EQUIPMENT PURSUANT TO THE POLICY OF THE EL CENTRO POLICE DEPARTMENT, waive reading and adopt by title only.

3. Approval of City Council Minutes of October 15, 2024, October 28, 2024, and October 29, 2024.

4. Adopt Resolution No. 24- , RESOLUTION OF THE CITY COUNCIL OF THE CITY OF EL CENTRO APPROVING A VENDOR AGREEMENT WITH VESTIS SERVICES, LLC FOR UNIFORM RENTAL AND LAUNDRY SERVICES.

5. Adopt Resolution. 24- , RESOLUTION OF THE CITY COUNCIL AUTHORIZING THE EL CENTRO POLICE DEPARTMENT TO PARTICIPATE IN THE BUREAU OF JUSTICE ASSISTANCE PATRICK LEAHY BULLETPROOF VEST PARTNERSHIP GRANT PROGRAM.

6. Approval of Plans and Specifications for the Wastewater Treatment Plant UV Disinfection Improvements.

7. Granting of an Easement to the Imperial Irrigation District at the City of El Centro Police Station.

8. Adopt Resolution. 24- , RESOLUTION OF THE CITY COUNCIL AUTHORIZING THE EL CENTRO POLICE DEPARTMENT TO PARTICIPATE IN THE DEPARTMENT OF ALCOHOLIC BEVERAGE CONTROL GRANT PROGRAM.

6:25-6:45 PM NEW BUSINESS:

9. Community Sponsorship - Soroptimist International of El Centro

   Presentation: Cedric Cesena, City Manager

   Recommendation:
   Discussion and any necessary action regarding the community sponsorship request

10. Ratify Letter of Support - Workforce Accelerator Grant Project in Imperial Valley

    Presentation: Cedric Cesena, City Manager

    Recommendation:
    Ratify letter of support request received from the Institute of Local Government for the Workforce Accelerator Grant Project in the Imperial Valley

6:45-6:55 PM DEPARTMENT PRESENTATIONS:

11. Library Department Presentation

LEGISLATIVE ACTION:

INFORMATIONAL ITEMS:

12. Received and referred to Community Development Department, Application for Alcoholic Beverage License Patriot Gas Inc. 2420 S. 4TH St El Centro, CA 92243-6003

13. Old City Library Electrical Emergency Repairs

6:55-7:30 PM TASK FORCE REPORTS AND MAYOR - COUNCIL MEMBER REPORTS:

7:30-7:40 PM CITY MANAGER REPORT:

ADJOURNMENT:

Materials related to an item on this Agenda submitted to the City Council after distribution of the agenda packet will be available for public inspection at the Office of the City Clerk, 1275 Main Street, El Centro, California 92243, Monday-Friday during normal business hours.

In compliance with the Americans with Disabilities Act, if you need special assistance to participate in this meeting, you should contact the office of the City Clerk at (760)337-4515. Notification at least 48 hours prior to the meeting will enable the City to make reasonable arrangement to assure accessibility to this meeting.

Proclamation - National Law Enforcement Records and Support Personnel Appreciation Week, November 11-15, 2024

CITY MANAGER'S RECOMMENDATION:
N/A

FISCAL IMPACT:
N/A

STRATEGIC PLANNING PROGRAM 2022-2027 RELATION:

DUE DILIGENCE CHECK FOR CONTRACTORS/CONSULTANTS: DID THE DEPARTMENT VERIFY CURRENT EL CENTRO BUSINESS LICENSE, CONTRACTOR'S LICENSE, REFERENCE CHECKES, INSURANCE, ETC.:
N/A

BACKGROUND:
N/A

DISCUSSION:
N/A

CONCLUSION:
N/A

ATTACHMENTS:
None

2nd Reading and Adoption of Ordinance No. 24-04, AN UNCODIFIED ORDINANCE OF THE CITY COUNCIL OF THE CITY OF EL CENTRO APPROVING THE SECOND RENEWAL OF ORDINANCE NO. 22-06 REGARDING THE CONTINUING USE OF ANNUAL MILITARY EQUIPMENT PURSUANT TO THE POLICY OF THE EL CENTRO POLICE DEPARTMENT, waive reading and adopt by title only.

CITY MANAGER'S RECOMMENDATION:
2nd Reading and Adoption of Ordinance No. 24-04, AN UNCODIFIED ORDINANCE OF THE CITY COUNCIL OF THE CITY OF EL CENTRO APPROVING THE SECOND RENEWAL OF ORDINANCE NO. 22-06 REGARDING THE CONTINUING USE OF ANNUAL MILITARY EQUIPMENT PURSUANT TO THE POLICY OF THE EL CENTRO POLICE DEPARTMENT, waive reading and adopt by title only.

FISCAL IMPACT:
N/A

STRATEGIC PLANNING PROGRAM 2022-2027 RELATION:

DUE DILIGENCE CHECK FOR CONTRACTORS/CONSULTANTS: DID THE DEPARTMENT VERIFY CURRENT EL CENTRO BUSINESS LICENSE, CONTRACTOR'S LICENSE, REFERENCE CHECKES, INSURANCE, ETC.:
N/A

BACKGROUND:
N/A

DISCUSSION:
N/A

CONCLUSION:
N/A

ATTACHMENTS:
1. Ordinance MIlitary Equipment

ORDINANCE NO. 24-04

AN UNCODIFIED ORDINANCE OF THE CITY COUNCIL OF THE CITY OF EL CENTRO APPROVING THE SECOND RENEWAL OF ORD. NO 22-06 REGARDING THE CONTINUING USE OF ANNUAL MILITARY EQUIPMENT PURSUANT TO THE POLICY OF THE EL CENTRO POLICE DEPARTMENT

SECTION 1. Findings. The City Council of the City of El Centro finds as follows:

A. Ordinance No. 22-06 made certain findings and adopted the Police Department's military use Policy, as currently posted on the Police Department website as required by AB 481 (Govt. Code Sections 7070-7075) regarding the use of certain military equipment (as defined in those Sections) by law enforcement agencies.

B. Assembly Bill 481 allows the City Council to approve the funding, acquisition, or use of military equipment and a Police Department Policy (the "Policy") for such use within the City upon making specified findings at a duly noticed public hearing;

C. At an open session held on April 19, 2022, during a regular City Council meeting conducted pursuant to the Ralph M. Brown Act, the City Council considered the presentation of the Police Department and any public testimony and based upon thereon, the City Council found as follows and reviewed and approved the Policy:

a The military equipment is necessary because there is no reasonable alternative that can achieve the same objective of officer and civilian safety; and

b The proposed military equipment use policy will safeguard the public's welfare, safety, civil rights, and civil liberties; and

c If purchasing the equipment, the equipment is reasonably cost effective compared to available alternatives that can achieve the same objective of officer and civilian safety; and

d Prior military equipment use complied with the military equipment use policy that was in effect at the time, or if prior uses did not comply with the accompanying military equipment use policy, corrective action has been taken to remedy nonconforming uses and ensure future compliance; and

D. After adoption of Ordinance 22-6, for the Police Department to continue to possess and use the identified military equipment, the Police Department must provide an annual report which regarding the use of the identified military equipment. There has been no change in the type of military equipment possessed or used by the Police Department.

E. Annual Report. Govt. Code Section 7072(a) requires a law enforcement agency that receives approval for a submit to the governing body an annual military equipment report for each type of military equipment approved by the governing body within one year of approval, and annually thereafter for as long as the military equipment is available for use.

F. The annual military equipment report shall include the following information for the immediately preceding calendar year for each type of military equipment:

(1) A summary of how the military equipment was used and the purpose of its use.
(2) A summary of any complaints or concerns received concerning the military equipment.
(3) The results of any internal audits, any information about violations of the military equipment use policy, and any actions taken in response.
(4) The total annual cost for each type of military equipment, including acquisition, personnel, training, transportation, maintenance, storage, upgrade, and other ongoing costs, and from what source funds will be provided for the military equipment in the calendar year following submission of the annual military equipment report.
(5) The quantity possessed for each type of military equipment.
(6) If the law enforcement agency intends to acquire additional military equipment in the next year, the quantity sought for each type of military equipment.

G. The Police Department now has prepared that annual report, attached and incorporated as Exhibit 1.

H. Posting: State law also requires that the Police Department make such annual military equipment report required by this section publicly available on its internet website for as long as the military equipment is available for use.

H. Public Meeting: Govt. Code Section 7072(b further requires that within 30 days of submitting and publicly releasing an annual military equipment report pursuant to this section, the law enforcement agency shall hold at least one well-publicized and conveniently located community engagement meeting, at which the general public may discuss and ask questions regarding the annual military equipment report and the law enforcement agency's funding, acquisition, or use of military equipment.

The Police Department released the military report on September 27, 2024 and conducted the noticed community engagement meeting for October 2, 2024 to be located at 1275 Main St. El Centro, CA.

SECTION 2. The City Council of the City of El Centro does ordain as follows:

A. The Findings set out above are true and correct and adopted.

B. The City Council of the City of El Centro hereby approves and adopts the annual military report attached and incorporated as Exhibit 1.

C. Ordinance 22-06 is renewed in its entirety as revised by this ordinance No. 24-

SECTION 3. Term: This ordinance shall take effect 30 calendar days from the date of its adoption and shall be renewed as provided by state law.

SECTION 4.

INTRODUCED at a regular meeting of the City Council of the City of El Centro, California, held on the 15th day of October, 2024.

PASSED AND ADOPTED at a regular meeting of the City Council of the City of El Centro, California held on day of , 2024.

CITY OF EL CENTRO

By _____
Sylvia Marroquin, Mayor

ATTEST:

By _____
Norma Wyles, City Clerk

APPROVED AS TO FORM:
Office of the City Attorney

By_____
Elizabeth L. Martyn, City Attorney

STATE OF CALIFORNIA)
COUNTY OF IMPERIAL) ss
CITY OF EL CENTRO)

I, Norma Wyles, City Clerk of the City of El Centro, California, do hereby certify that the forgoing Ordinance No. 24-04 had its first reading on the 15th day of October, 2024, and had its second reading on day of , 2024, and was passed by the following vote:

AYES: Cardenas-Singh, Oliva, Marroquin, Garcia
NOES: None
ABSENT: Carter
ABSTAINED: None

AYES:
NOES:
ABSENT:
ABSTAINED:

By_____
Norma Wyles, City Clerk

Approval of City Council Minutes of October 15, 2024, October 28, 2024, and October 29, 2024.

CITY MANAGER'S RECOMMENDATION:
Approve the City Council meeting minutes of October 15, 2024, October 28, 2024, and October 29, 2024.

FISCAL IMPACT:
N/A

STRATEGIC PLANNING PROGRAM 2022-2027 RELATION:

DUE DILIGENCE CHECK FOR CONTRACTORS/CONSULTANTS: DID THE DEPARTMENT VERIFY CURRENT EL CENTRO BUSINESS LICENSE, CONTRACTOR'S LICENSE, REFERENCE CHECKES, INSURANCE, ETC.:
N/A

BACKGROUND:
N/A

DISCUSSION:
N/A

CONCLUSION:
N/A

ATTACHMENTS:
1. 10-15-2024 Regular CC Minutes
2. 10-28-2024 Special Joint Meeting CC Minutes
3. 10-29-2024 Special Meeting CC Minutes

REGULAR MEETING
EL CENTRO CITY COUNCIL
CITY HALL, COUNCIL CHAMBERS
1275 MAIN STREET, EL CENTRO, CA
TUESDAY, OCTOBER 15, 2024, 11:30 A.M.

The El Centro City Council met in a regular session on Tuesday, October 15, 2024 at 11:33 a.m. in Conference Room A, El Centro City Hall, 1275 W. Main Street, El Centro, California for the purpose of closed session.

PRESENT: Council: Cardenas-Singh, Oliva, Marroquin, Garcia, Carter
City Clerk Wyles, City Manager Cesena, City Attorney Martyn Evans

CLOSED SESSION PUBLIC COMMENT
None

CITY COUNCIL CLOSED SESSION
Moved by Cardenas-Singh, second by Carter, to adjourn into closed session for:

ANTICIPATED LITIGATION
Closed Session pursuant to Govt. Code Section 54956.9(d)(2) – possible litigation against the City- 1 case

LABOR RELATIONS NEGOTIATIONS
Closed Session pursuant to Govt. Code Section 54957 – Public Employment – Interim City Manager

Motion unanimously carried.

Closed Session concluded at 1:35 p.m. with all members present.

City Council Reconvened at 6:00 p.m. for Open Session.

OPEN SESSION
The El Centro City Council met in a regular session on Tuesday, October 15, 2024 at 6:03 p.m. in Council Chambers, El Centro City Hall, 1275 Main Street, El Centro, California.

PRESENT: Council: Cardenas-Singh, Oliva, Marroquin, Garcia
City Clerk Wyles, City Manager Ceseña, City Attorney Martyn Evans

ABSENT: Council: Carter (Excused)

Pledge of Allegiance to the flag of the United States of America was led by Council Member Garcia and Invocation was given by Council Member Oliva.

CITY ATTORNEY REORT ON CLOSED SESSION:
None

PUBLIC COMMENTS
None

PRESENTATIONS AND ANNOUNCEMENTS BY MAYOR

1. Proclamation for National Community Planning Month, October 2024, received by Angel Hernandez, Community Development Director.

2. Proclamation for Code Enforcement Officer Appreciation Week of October 7-11, 2024, received by Angel Hernandez, Community Development Director.

3. Presentation by Sabrina Barber, Assistant Manager, Imperial Irrigation District regarding Public Power Week with Double Incentive Energy Efficiency Rebate Promotion.

CONSENT AGENDA (ITEMS 4-8)
Moved by Cardenas-Singh, second by Garcia, approving consent items (# 4-8).

4. Approval of warrant registers for the month of September 2024.

5. Approval of payroll registers for the month of September 2024.

6. Approval of treasurer's report for the month of September 2024.

7. Approval of City Council minutes of October 1, 2024 and October 3, 2024.

8. Approval of the Local Transportation Five Year Expenditure Plan FY25 to FY29.

9. * See below.

AYES: Cardenas-Singh, Oliva, Marroquin, Garcia
NOES: None
ABSENT: Carter
ABSTAINED: None

***ITEM #9 WAS PULLED AND ADDED TO NEW BUSINESS AS ITEM #12A**

Items #20 was taken out of order*

DEPARTMENT REPORT
20. Public Works department update by Abraham Campos, Public Works Director/City Engineer.

PUBLIC HEARINGS:
10. This was the date and time set for a public hearing to consider the recommendation of the Planning Commission regarding the approval of the Final Mitigated Negative Declaration No. 22-03 for General Plan Amendment 22-03 and CR&R Waste Transfer Station Project. Presentation by Angel Hernandez, Community Development Director.

Mayor Marroquin declared the public hearings opened and asked if anyone wished to speak in favor or opposition to come forward. A comment was received by Dr. Ray Sanie, via email. The public comment was read by Mayor Marroquin and addressed by Mr. Hernandez. Mayor Marroquin closed the public hearing after no other comments were received and brought back to Council. Council Member Oliva asked if there will be spillages and excessive smells coming from this location. Mr. Hernandez explained that this station will only be used to wash vehicles inside the facility. CR&R representative explained that this station will be used to transfer material from one vessel into another vessel. It will be an opened building in order for vehicle to come in and out.

Moved by Cardenas-Singh, second by Garcia, adoption of **Resolution No. 24-75,** RESOLUTION OF THE CITY COUNCIL OF THE CITY OF EL CENTRO ADOPTING MITIGATED NEGATIVE DECLARATION WITH MITIGATION MONITORING & REPORTING PROGRAM FOR PROJECT: CR&R Waste Transfer Facility General Plan Amendment 22-03, consisting of approximately 8.95 acres of land, located approximately 1,125 linear feet east of the southeast corner of Dogwood Avenue and Ross Avenue.

AYES: Cardenas-Singh, Oliva, Marroquin, Garcia
NOES: None
ABSENT: Carter
ABSTAINED: None

11. This was the date and time set for a public hearing to consider the recommendation of the Planning Commission regarding the approval General Plan Amendment 22-03 for the CR&R Waste Transfer Station. Presentation by Angel Hernandez, Community Development Director.

Moved by Oliva, second by Cardenas-Singh, adoption of **Resolution No. 24-76**, RESOLUTION OF THE CITY COUNCIL OF THE CITY OF EL CENTRO APPROVING GENERAL PLAN AMENDMENT 22-03 CHANGING THE LAND USE DESIGNATION FROM GENERAL COMMERCIAL TO GENERAL INDUSTRIAL FOR PROPERTY LOCATED 1,125 LINEAR FEET EAST OF THE SOUTHEAST CORNER OF DOGWOOD AVENUE AND ROSS AVENUE, AND DECLARING SAME TO BE FIRST GENERAL PLAN AMENDMENT FOR CALENDAR YEAR 2024.

AYES: Cardenas-Singh, Oliva, Marroquin, Garcia
NOES: None
ABSENT: Carter
ABSTAINED: None

NEW BUSINESS

12. Presentation by Elizabeth Fuchen, Interim Finance Director, Reallocation of the America Rescue Plan Expenditures.
Motion by Cardenas-Singh, second by Garcia, approval of the proposed reallocation of previously approved ARPA expenditures.

AYES: Cardenas-Singh, Oliva, Marroquin, Garcia
NOES: None
ABSENT: Carter
ABSTAINED: None

12a. Moved by Cardenas-Singh, Second by Marroquin, appointment of Interim Finance Director, contract with Andy Heath. Council member Oliva asked that this agreement have a salary cap to the salary as what is listed for the finance director and without benefits.

AYES: Cardenas-Singh, Oliva, Marroquin, Garcia
NOES: None
ABSENT: Carter
ABSTAINED: None

13. Moved by Garcia, second by Oliva, approval of **Ordinance No. 24-04**, AN UNCODIFIED ORDINANCE OF THE CITY COUNCIL OF THE CITY OF EL CENTRO APPROVING THE SECOND RENEWAL OF ORDINANCE NO. 22-06 REGARDING THE CONTINUING USE OF MILITARY EQUIPMENT PURSUANT TO THE POLICY OF THE EL CENTRO POLICE DEPARTMENT, waive reading and approve first reading and authorize the City Clerk to place on the next agenda for second reading and adoption.

AYES: Cardenas-Singh, Oliva, Marroquin, Garcia
NOES: None
ABSENT: Carter
ABSTAINED: None

14. Moved by Oliva, second by Cardenas-Singh, adoption of **Resolution No. 24-77,** RESOLUTION OF THE CITY COUNCIL OF THE CITY OF EL CENTRO ACCEPTING GRANT FUNDS ALLOCATED TO THE CITIZENS OPTION FOR PUBLIC SAFETY PROGRAM FUNDED FOR FY 2022-2023 THROUGH THE STATE OF CALIFORNIA LOCAL SAFETY AND PROTECTION ACCOUNT.

AYES: Cardenas-Singh, Oliva, Marroquin, Garcia
NOES: None
ABSENT: Carter
ABSTAINED: None

15. Moved by Oliva, second by Garcia, approval of a community sponsorship for the Central Union High School Varsity Cheerleading Team in the amount of **$500.00**.

AYES: Cardenas-Singh, Oliva, Marroquin, Garcia
NOES: None
ABSENT: Carter
ABSTAINED: None

16. Moved by Marroquin, second by Oliva, approval of a community sponsorship for Dancing for a Dream Foundation in the amount of **$950.00**.

AYES: Cardenas-Singh, Oliva, Marroquin, Garcia
NOES: None
ABSENT: Carter
ABSTAINED: None

17. Moved by Marroquin, second by Cardenas-Singh, approval to ratify a Letter of Support for Working Hands Program T-Mobile Hometown Grants.

    AYES: Cardenas-Singh, Oliva, Marroquin, Garcia
    NOES: None
    ABSENT: Carter
    ABSTAINED: None

18. Moved by Oliva, second by Marroquin, approval to ratify a Letter of Support for Cal Recycle Beverage Container Recycling Grant Program.

    AYES: Cardenas-Singh, Oliva, Marroquin, Garcia
    NOES: None
    ABSENT: Carter
    ABSTAINED: None

19. Delegate for Upcoming National League of Cities (NLC) Annual Business Meeting.
    Item was deferred to the November 19, 2024 City Council Meeting.

DEPARTMENT REPORT

*20. Moved up by Mayor Marroquin.

LEGISLATIVE

None

INFORMATION ITEM

21. Received and referred to Community Development Department, Application for Alcoholic Beverage License, Poke & Noodle, 799 Danenberg Dr., El Centro, CA 92243-8509.

22. Received and referred to Community Development Department, Application for Alcoholic Beverage License, Shooters Sport Bar, 467 W. Main St., El Centro, CA 92243-3006.

23. Received Old City Library Electrical Emergency Repairs report.

TASK FORCE AND MAYOR & COUNCIL MEMBERS REPORTS

Mayor and Council Members reported on their activities since last City Council meeting and upcoming events.

CITY MANAGER REPORT

Reported on activities.

ADJOURNMENT

With no further business, the meeting was adjourned at 8:07 p.m.

_____
Norma Wyles, City Clerk

APPROVED BY:

_____
Sylvia Marroquin, Mayor

JOINT SPECIAL MEETING
EL CENTRO CITY COUNCIL
EL CENTRO REGIONAL MEDICAL CENTER
1249 MAIN STREET, EL CENTRO, CA
MONDAY, OCTOBER 28, 2024, 5:00 P.M.

The El Centro City Council met in special joint session with El Centro Regional Medical Center, Board of Trustees, on Monday, October 28, 2024 at 5:01 p.m. in RDA Conference Room, 1249 Main Street, El Centro, California, for closed session meeting.

PRESENT: Council: Cardenas-Singh, Oliva, Marroquin, Garcia, Carter
City Clerk Wyles, City Manager Ceseña, City Attorney Martyn Evans

ALSO PRESENT: **Hospital Board of Trustees Representation:**
Board President Oliva, Vice Board President Marroquin, Trustees Cardenas-Singh, Garcia, Carter, Maysent, Tomaszewski; and Executive Board Secretary Belen Gonzalez.
Hospital Administrative Staff: Luis Castro, COO, Suzanne Martinez, CNO, David Momberg, CFO, Kimberly Probus, Dr. Seung Gwon, Veronica Marsich, Douglas Habib, Matt Nilsen, Hayes Herd, Dr. Sunny Richley

Pledge of Allegiance was led by Board President Tomás Oliva.

PUBLIC COMMENTS:
No public comments received.

CITY COUNCIL CLOSED SESSION:
CLOSED SESSION WITH LEGAL COUNSEL
Closed session with legal counsel pursuant to Govt. Code §54956.9(d) – Potential Litigation by the City

TRADE SECRETS
The City Council will recess to a joint closed session with the ECRMC Board pursuant to Govt. Code Sections 37606.1(b) for the purpose of discussion and/or deliberation of reports involving hospital trade secret(s) as defined in subdivision (d) of Section 3426.1 of the Civil Code and which are necessary, and would, if prematurely disclosed, would create a substantial probability of depriving the hospital of substantial economic benefit:

Discussion of:	Number of Items:
X hospital service;	1
X program:	1
X hospital Facility	1

City Council joint meeting recessed at 5:46 pm and reconvened at 7:01 pm with all Council Members present.

ADJOURNMENT

With no further business to come before City Council, Mayor Marroquin adjourned the meeting at 7:54 p.m.

_____
Norma Wyles, City Clerk

APPROVED BY:

_____
Sylvia Marroquin, Mayor

SPECIAL CITY COUNCIL MEETING
EL CENTRO CITY COUNCIL
EL CENTRO LIBRARY
1198 N. IMPERIAL AVENUE, EL CENTRO, CA
TUESDAY, OCTOBER 29, 2024, 6:00 P.M.

OPEN SESSION

The El Centro City Council met in a special session on Tuesday, October 29, 2024 at 6:17 p.m. in the El Centro Library, El Centro, California.

PRESENT: Council: Cardenas-Singh, Oliva, Marroquin, Garcia, Carter
City Clerk Wyles, City Manager Ceseña, City Attorney Martyn Evans

Pledge of Allegiance to the flag of the United States of America was led by Interim Pro-Tem Cardenas-Singh and Invocation was given by Deacon Domingo.

PUBLIC COMMENTS:

No public comments were received.

SPECIAL PRESENTATION AND ANNOUNCEMENTS BY MAYOR:

1. State of the Chamber was presented by Sher Cowie, Board President.

2. State of the City was presented by Mayor Sylvia Marroquin.

ADJOURNMENT

With no further business, the meeting was adjourned at 6:50 p.m.

_____
Norma Wyles, City Clerk

APPROVED BY:

_____
Sylvia Marroquin, Mayor

Adopt Resolution No. 24- , RESOLUTION OF THE CITY COUNCIL OF THE CITY OF EL CENTRO APPROVING A VENDOR AGREEMENT WITH VESTIS SERVICES, LLC FOR UNIFORM RENTAL AND LAUNDRY SERVICES.

CITY MANAGER'S RECOMMENDATION:

Adopt Resolution No. 24- , RESOLUTION OF THE CITY COUNCIL OF THE CITY OF EL CENTRO APPROVING A VENDOR AGREEMENT WITH VESTIS SERVICES, LLC FOR UNIFORM RENTAL AND LAUNDRY SERVICES.

FISCAL IMPACT:

This contract replaces an existing contract that serves both the Community Services Department and the Public Works Department, for a total of 10 divisions.

The funding for this contract is a combination of the General Fund, Water Enterprise Fund, and Wastewater Enterprise Fund. In the prior year, a total of $45,563.25 was expended; as such, it is expected that the annual contract cost will be just under $50,000 per year during the life of the contract.

STRATEGIC PLANNING PROGRAM 2022-2027 RELATION:

Environmental Sustainability & Infrastructure

DUE DILIGENCE CHECK FOR CONTRACTORS/CONSULTANTS: DID THE DEPARTMENT VERIFY CURRENT EL CENTRO BUSINESS LICENSE, CONTRACTOR'S LICENSE, REFERENCE CHECKES, INSURANCE, ETC.:

Vendor is the existing provider of uniforms and laundry services for the city. Staff has verified the vendor's State License which is current and in good standing. Business license and insurance will be obtained prior to notice to proceed being issued.

BACKGROUND:

City Public Works and Community Services staff have been operating on the same uniform rental and laundry service contract awarded to Aramark Uniform Services, LLC by Resolution No. 19-79.

The agreement term was for a period of 2 years and was extended for 3 additional one-year terms and is now reaching its expiration.

DISCUSSION:

City staff released a request for proposals on July 10, 2024.

One proposal was received from Vestis Services, LLC, formerly known as Aramark Uniform Services, LLC on August 23, 2024.

City staff performed an evaluation of the proposal and recommends to award the agreement to Vestis.

CONCLUSION:

Adopt Resolution No. 24- , RESOLUTION OF THE CITY COUNCIL OF THE CITY OF EL CENTRO APPROVING A VENDOR AGREEMENT WITH VESTIS SERVICES, LLC FOR UNIFORM RENTAL AND LAUNDRY SERVICES.

ATTACHMENTS:

1. Resolution 00077793
2. Vendor Agreement 00077544 REV 102824 Clean Copy_Redacted

RESOLUTION NO. 24-

RESOLUTION OF THE CITY COUNCIL OF THE CITY OF EL CENTRO APPROVING A VENDOR AGREEMENT WITH VESTIS SERVICES, LLC FOR UNIFORM RENTAL AND LAUNDRY SERVICES

WHEREAS, the City of El Centro (the "City") entered into an Agreement for Uniform Rental and Laundry Services with Aramark Uniform Services for uniform rental and laundry services under Resolution No. 19-79; and

WHEREAS, Aramark Uniform Services is now Vestis Services, LLC (the "Vendor"); and

WHEREAS, the agreement approved by Resolution No. 19-79 is reaching its expiration; and

WHEREAS, City staff released a request for proposals for uniform rental and laundry services for multiple City departments; and

WHEREAS, on August 23, 2024, one proposal was received from Vestis Services, LLC; and

WHEREAS, staff has reviewed the proposal and recommends to award the agreement to Vestis Services, LLC; and

WHEREAS, it is necessary for the City Council of the City of El Centro, California to approve an Agreement with the Vendor for uniform rental and laundry services; and

WHEREAS, the City Council finds that its approval of the purchase is in the best interest of the City.

NOW, THEREFORE, THE CITY COUNCIL OF THE CITY OF EL CENTRO, CALIFORNIA, DOES HEREBY RESOLVE AS FOLLOWS:

1. That the foregoing is true, correct and adopted.

2. That the City Council does hereby approve the Agreement.

3. That the City Manager is hereby authorized to sign the Agreement on behalf of the City, a copy of which is on file in the Office of the City Clerk and to take any and all necessary action to implement the provisions of this Resolution.

PASSED AND ADOPTED at a regular meeting of the City Council of the City of El Centro, California held on the day of , 2024.

CITY OF EL CENTRO

By _____
Sylvia Marroquin, Mayor

ATTEST:

By _____
Norma Wyles, City Clerk

APPROVED AS TO FORM:
Office of the City Attorney

By _____
Elizabeth L. Martyn, City Attorney

STATE OF CALIFORNIA)
COUNTY OF IMPERIAL) ss
CITY OF EL CENTRO)

I, Norma Wyles, City Clerk of the City of El Centro, California, do hereby certify that the forgoing Resolution No. 24- was duly and regularly adopted at a regular meeting of the City Council of the City of El Centro, California, held on the day of , 2024, by the following vote:

AYES:
NOES:
ABSENT:
ABSTAINED:

By _____
Norma Wyles, City Clerk

VENDOR AGREEMENT

This Vendor Agreement ("Agreement") is made and effective as of the last signature date below (the "Effective Date"), by and between the City of El Centro ("City"), a municipal corporation and charter city, and Vestis Services, LLC ("Vendor") a Delaware limited liability corporation in good standing to do business in California. Each is a party and together they are the parties.

RECITALS

A. City has conducted a request for proposal to identify an experienced and qualified vendor to provide uniform and laundry services; and
B. Vendor was the successful proposer; and
C. Vestis Services LLC was formerly known as Aramark, the previous provider of such services.
D. City and Vendor now enter into this Agreement to confirm the provisions of such services on the term and conditions set out herein.

AGREEMENT

I. SERVICES

Vendor will provide the work and services listed in Exhibit A, attached and incorporated (the "Scope of Services"). Vendor warrants that all work and services set forth in the Scope of Services will be performed in a competent, professional, and satisfactory manner.

II. TERM

Unless terminated earlier as provided herein below, the Agreement will continue in full force and effect from the Effective Date for a three-year period. Upon mutual written agreement, the term of this Agreement can be extended for an additional two-year period as the parties agree. All days set out herein are calendar days unless otherwise provided.

III. COMPENSATION

A. Vendor's Fee

For services rendered pursuant to this Agreement, Vendor will be paid in accordance with the Compensation Schedule attached hereto and incorporated as Exhibit B. Should this Agreement be renewed, the Vendor's fee may be adjusted upon the written agreement of the parties.

B. Schedule of Payment

Provided the Vendor is not in default under the terms of this Agreement, upon presentation of an invoice, Vendor will be paid the fees described as provided in Exhibit B. Payment on undisputed items will be due within 45 days after the date of the invoice.

IV. TERMINATION OF AGREEMENT

A. City may, at any time, for any reason, with or without cause, terminate this Agreement, or any portion hereof, by serving written notice of termination upon the Vendor at least ten (10) days prior to the date of termination. Upon receipt of said notice, the Vendor shall immediately cease all work under this Agreement, unless the notice provides otherwise. If the City terminates a portion of this Agreement, such termination shall not void or invalidate the remainder of this Agreement.

B. In the event this Agreement is terminated pursuant to this section, the City shall pay to Vendor the actual cost of the work performed up to the time of termination, less any disputed amounts. Upon termination of the Agreement pursuant to this section, the Vendor will submit an invoice to the City as provided herein above.

V. FORCE MAJEURE

If either party fails to perform its obligations because of strikes, lockouts, labor disputes, embargoes, acts of God, inability to obtain labor or materials or reasonable substitutes for labor or materials, governmental restrictions, governmental regulations, governmental control, judicial orders, enemy or hostile governmental action, civil commotion, fire or other casualty, or other causes beyond the reasonable control of the party obligated to perform, then that party's performance shall be excused for a period equal to the period of such cause for failure to perform but there shall be no monetary adjustment.

VI. CITY REPRESENTATIVE

City 's Public Works Director or designee (City's Representative) shall represent City in all matters pertaining to the administration of this Agreement, with respect to the work and services specified in this Agreement and to make all decisions in connection with this Agreement. Whenever approval, directions, or other actions are required by City under this Agreement, those actions will be taken by the City Representative unless otherwise stated. The City 's Manager the right to designate another City Representative at any time, by providing notice to Vendor.

VII. VENDOR REPRESENTATIVE(S)

Jason Hendrix, Account Executive and Bobby Torrez, Territory Manager are designated as being the principal(s) and representative(s) of Vendor authorized to act on its behalf with respect to the work specified in this Agreement and make all decisions in connection with this Agreement. Vendor shall not change the designated representatives without prior written consent of the City.

VIII. BUSINESS LICENSE

The Vendor must obtain a City business license in its name prior to the start of work under this Agreement, unless Vendor is qualified for an exemption.

IX. OTHER LICENSES AND PERMITS

Vendor warrants that it has all professional, contracting, and other permits and licenses required to undertake the work contemplated by this Agreement.

X. VENDOR'S RECORDS

Records of the Vendor's time pertaining to the services and records of accounts between the City and the Vendor will be kept on a generally recognized accounting basis. Vendor will also maintain all other records, including without limitation invoices, correspondence, specifications, drawings, progress reports, and the like, relating to the Vendor's services. All records will be available to City during normal working hours. Vendor will maintain these records for three (3) years after final payment.

XI. RETENTION OF FUNDS

Vendor authorizes City to deduct from any amount payable to Vendor (whether or not arising out of this Agreement) any amounts the payment of which may be in dispute or that are necessary to compensate City for any losses, costs, liabilities, or damages suffered by City, and all amounts for which City may be liable to third parties, by reason of Vendor's acts or omissions in performing or failing to perform Vendor's obligations under this Agreement. In the event that any claim is made by a third party, the amount or validity of which is disputed by Vendor, or any indebtedness exists that appears to be the basis for a claim, City may withhold from any payment due, without liability for interest because of the withholding, an amount sufficient to cover the claim. The failure of City to exercise the right to deduct or to withhold will not, however, affect the obligations of Vendor to insure, indemnify, and protect City as elsewhere provided in this Agreement.

XII. NON-LIABILITY OF CITY OFFICERS AND EMPLOYEES

No officer or employee of City will be personally liable to Vendor, in the event of any default or breach by the City or for any amount that may become due to Vendor under this Agreement.

XIII. INDEPENDENT CONTRACTOR

A. Vendor is and shall at all times remain as to the City a wholly independent contractor. Vendor's employees performing the services under this Agreement on behalf of Vendor shall at all times be under Vendor's exclusive direction and control. Neither City nor any of its officers, employees, or agents shall have control over the conduct of Vendor or any of Vendor's employees, except as set forth in this Agreement. Vendor shall not at any time or in any manner represent that it or any of its employees or agents are in any manner employees or agents of the City. Vendor shall not incur nor have the power to incur any debt, obligation, or liability whatsoever against City, or bind City in any manner.

B. No employee benefits shall be available to Vendor in connection with the performance of this Agreement. Except for the fees paid to Vendor as provided in the Agreement, City shall not pay salaries, wages, or other compensation to Vendor and/or its employees for performing work or services hereunder for City . City shall not be liable for compensation or indemnification to Vendor for injury or sickness to its employee(s) arising out of performing work or services hereunder.

XIV. SUBCONTRACTORS

Before Vendor retains or hires a subcontractor to provide any work, labor, or services relative to this Agreement, Vendor must:

A. Present the name and identifying information of the subcontractor that will provide any work, labor, or services to City;

B. Present to the City the form of subcontract that will be used with the subcontractor for City 's approval, which approval will not be unreasonably withheld. Such subcontract agreement must include an indemnity agreement that is generally in accord with the indemnity obligations contained herein of this Agreement and must specifically name the City as an indemnified party; and

C. Secure from the subcontractor evidence of insurance coverage that meets with this Agreement including naming the City as an additional insured as required by this Agreement, unless such requirement is waived in writing by the City as provided herein below.

XV. INDEMNIFICATION

Vendor shall indemnify, defend, and hold harmless the City, and its officers, employees, and agents ("City Indemnitees"), from and against any and all causes of action, claims, liabilities, obligations, judgments, or damages, including reasonable attorney's fees and costs of litigation ("claims"), arising out of the Vendor's performance of its obligations under this agreement or out of the operations conducted by Vendor, including the City 's active or passive negligence, except for such loss or damage arising from the sole negligence or willful misconduct of the City. In the event the City Indemnitees are made a party to any action, lawsuit, or other adversarial proceeding arising from Vendor's performance of this Agreement, the Vendor shall provide a defense to the City Indemnitees or at the City 's option reimburse the City Indemnitees their costs of defense, including reasonable attorney's fees, incurred in defense of such claims.

Payment by City is not a condition precedent to enforcement of this indemnity. In the event of any dispute between Vendor and City, as to whether liability arises from the sole negligence or willful misconduct of the City or its officers, employees, or agents, Vendor will be obligated to pay for City 's defense until such time as a final judgment has been entered adjudicating the City as solely negligent or to have acted with willful misconduct. Vendor will not be entitled in the absence of such a determination to any reimbursement of defense costs including but not limited to attorney's fees, expert fees, and costs of litigation.

XVI. INSURANCE

Without limiting Vendor's indemnification of City, and prior to commencement of work, Vendor shall obtain, provide, and maintain at its own expense during the term of this Agreement, policies of insurance of the types and amounts described below and in a form that is satisfactory to City.

General liability insurance. Vendor shall maintain commercial general liability insurance with coverage at least as broad as Insurance Services Office form CG 00 01, in an amount not less than $1,000,000 per occurrence, $2,000,000 general aggregate, for bodily injury, personal injury, and property damage. The policy must include contractual liability that has not been amended. Any endorsement restricting standard ISO "insured contract" language will not be accepted.

Automobile liability insurance. Vendor shall maintain automobile insurance at least as broad as Insurance Services Office form CA 00 01 covering bodily injury and property damage for all activities of the Vendor arising out of or in connection with Work to be performed under this Agreement, including coverage for any owned, hired, non-owned, or rented vehicles, in an amount not less than $1,000,000 combined single limit for each accident.

Workers' compensation insurance. Vendor shall maintain Workers' Compensation Insurance (Statutory Limits) and Employer's Liability Insurance (with limits of at least $1,000,000).

Vendor shall submit to City, along with the certificate of insurance, a Waiver of Subrogation endorsement in favor of City, its officers, agents, employees, and volunteers.

Other provisions or requirements

Proof of insurance. Vendor shall provide certificates of insurance and required endorsements to City as evidence of the insurance coverage required herein. Insurance certificates and endorsements must be approved by City 's Risk Manager prior to commencement of performance. Current certification of insurance shall be kept on file with City for the contract period and any additional length of time required thereafter. City reserves the right to require complete, certified copies of all required insurance policies, at any time.

Duration of coverage. Vendor shall procure and maintain for the contract period, and any additional length of time required thereafter, insurance against claims for injuries to persons or damages to property, or financial loss which may arise from or in connection with the performance of the Work hereunder by Vendor, their agents, representatives, employees, or subconsultants.

Primary/non-contributing. Coverage provided by Vendor shall be primary and any insurance or self-insurance procured or maintained by City shall not be required to contribute with it. The limits of insurance required herein may be satisfied by a combination of primary and umbrella or excess insurance. Any umbrella or excess insurance shall contain or be endorsed to contain a provision that such coverage shall also apply on a primary and non-contributory basis for the benefit of City before the City 's own insurance or self- insurance shall be called upon to protect it as a named insured.

City 's rights of enforcement. In the event any policy of insurance required under this Agreement does not comply with these specifications or is canceled and not replaced, City has the right but not the duty to obtain the insurance it deems necessary, and any premium paid by City will be promptly reimbursed by Vendor or City will withhold amounts sufficient to pay premium from Vendor payments. In the alternative, City may cancel this Agreement.

Acceptable insurers. All insurance policies shall be issued by an insurance company currently authorized by the Insurance Commissioner to transact business of insurance or is on the List of Approved Surplus Line Insurers in the State of California, with an assigned policyholders' Rating of A- (or higher) and Financial Size Category Class VII (or larger) in accordance with the latest edition of Best's Key Rating Guide, unless otherwise approved by the City 's Risk Manager.

Waiver of subrogation. All insurance coverage maintained or procured pursuant to this agreement shall be endorsed to waive subrogation against City, its elected or appointed officers, agents, officials, employees, and volunteers or shall specifically allow Vendor or others providing insurance evidence in compliance with these specifications to waive their right of recovery prior to a loss. Vendor hereby waives its own right of recovery against City and shall require similar written express waivers and insurance clauses from each of its subconsultants.

Enforcement of contract provisions (non estoppel). Vendor acknowledges and agrees that any actual or alleged failure on the part of the City to inform Vendor of non-compliance with any requirement imposes no additional obligations on the City nor does it waive any rights hereunder.

Requirements not limiting. Requirements of specific coverage features or limits contained in this Section are not intended as a limitation on coverage, limits or other requirements, or a waiver of any coverage normally provided by any insurance. Specific reference to a given coverage feature is for purposes of clarification only as it pertains to a given issue and is not intended by any party or insured to be all inclusive, or to the exclusion of other coverage, or a waiver of any type. If the Vendor maintains higher limits than the minimums shown above, the City requires and shall be entitled to coverage for the higher limits maintained by the Vendor. Any available insurance proceeds in excess of the specified minimum limits of insurance and coverage shall be available to the City.

Notice of cancellation. Vendor agrees to oblige its insurance agent or broker and insurers to provide the City with a thirty (30) day notice of cancellation (except for nonpayment for which a ten (10) day notice is required) or nonrenewal of coverage for each required coverage. If any of the Vendor's insurers are unwilling to provide such notice, then Vendor shall have the responsibility of notifying the City immediately in the event of Vendor's failure to renew any of the required insurance coverages or insurer's cancellation or non-renewal.

Additional insured status. General liability, automobile liability, and umbrella/excess liability insurance policies shall provide or be endorsed to provide that City and its officers, officials, employees, agents, and volunteers shall be additional insureds under such policies.

Prohibition of undisclosed coverage limitations. None of the coverages required herein will be in compliance with these requirements if they include any limiting endorsement of any kind that has not been first submitted to City and approved of in writing.

Separation of insureds. A severability of interests provision must apply for all additional insureds ensuring that Vendor's insurance shall apply separately to each insured against whom claim is made or suit is brought, except with respect to the insurer's limits of liability. The policy(ies) shall not contain any cross-liability exclusions.

Pass through clause. Vendor agrees to ensure that its subconsultants, subcontractors, and any other party who is brought into or involved in the services by Vendor (hereinafter collectively "Subcontractor"), provide the same minimum insurance coverage and endorsements required of Vendor. Vendor agrees to monitor and review all such coverage and assumes all responsibility for ensuring that such coverage is provided in conformity with the requirements of this section. However, in the event Vendor's Subcontractor cannot comply with this requirement, which proof must be submitted to the City , Vendor may still be able to utilize the Subcontractor provided Vendor shall be required to ensure that its Subcontractor provide and maintain insurance coverage and endorsements sufficient to the specific risk of exposure involved with Subcontractor's scope of work and services, with limits less than required of the Vendor, but in all other terms consistent with the Vendor's requirements under this Agreement. This provision does not relieve the Vendor of its contractual obligations under the Agreement and/or limit its liability to the amount of insurance coverage provided by its Subcontractors. This provision is intended solely to provide Vendor with the ability to utilize a Subcontractor who may be otherwise qualified to perform the work or services but may not carry the same insurance limits as required of the Vendor under this Agreement given the limited scope of work or services provided by the Subcontractor. Vendor agrees that upon request, all agreements with Subcontractors, and others engaged in the services, will be submitted to City for review.

City 's right to revise specifications. The City reserves the right at any time during the term of the contract to change the amounts and types of insurance required by giving the Vendor ninety (90) days advance written notice of such change. If such change results in substantial additional cost to the Vendor, the City and Vendor may renegotiate Vendor's compensation.

Self-insured retentions. Any self-insured retentions must be declared to and approved by City. City reserves the right to require that self-insured retentions be eliminated, lowered, or replaced by a deductible, or require proof of ability to pay losses and related investigations, claim administration, and defense expenses within the retention through confirmation from the underwriter.

Timely notice of claims. Vendor shall give City prompt and timely notice of claims made or suits instituted that arise out of or result from Vendor's performance under this Agreement, and that involve or may involve coverage under any of the required liability policies.

Additional insurance. Vendor shall also procure and maintain, at its own cost and expense, any additional kinds of insurance, which in its own judgment may be necessary for its proper protection and prosecution of the work.

XVII. CONFLICT OF INTEREST

No officer or employee of the City may have any financial interest, direct or indirect, in this Agreement, nor may any officer or employee participate in any decision relating to the Agreement that affects the officer or employee's financial interest or the financial interest of any corporation, partnership or association in which the

officer or employee is, directly or indirectly interested, in violation of any law, rule or regulation.

No person may offer, give, or agree to give any officer or employee or former officer or employee, nor may any officer or employee solicit, demand, accept, or agree to accept from another person, a gratuity or an offer of employment in connection with any decision, approval, disapproval, recommendation, preparation or any part of a program requirement or a purchase request, influencing the content of any specification or procurement standard, rendering of advice, investigation, auditing, or in any other advisory capacity in any way pertaining to any program requirement, contract or subcontract, or to any solicitation or proposal.

Contractor shall complete and submit to City the Levine Act Statement, attached and incorporated as Exhibit C to this Agreement.

XVIII. NOTICE

All notices, requests, demands, or other communications under this Agreement will be in writing. Notice will be sufficiently given for all purposes as follows:

A. Personal delivery. When personally delivered to the recipient; notice is effective on delivery.

B. First Class mail. When mailed first class to the last address of the recipient known to the party giving notice, notice is effective three mail delivery days after deposit in a United States Postal Service office or mailbox.

C. Certified mail. When mailed certified mail, return receipt requested, notice is effective on receipt, if delivery is confirmed by a return receipt.

D. Overnight delivery. When delivered by an overnight delivery service, charges prepaid or charged to the sender's account; notice is effective on delivery, if delivery is confirmed by the delivery service.

E. Facsimile transmission. When sent by fax to the last fax number of the recipient known to the party giving notice; notice is effective on receipt. Any notice given by fax will be deemed received on the next business day if it is received after 5:00 p.m. (recipient's time) or on a non-business day.

Addresses for purpose of giving notice are as follows:

To CITY: City of El Centro Public Works Department

Attention: City Clerk

To VENDOR: Vestis Services, LLC

Attention: Jason Hendrix, Account Executive

and Bobby Torrez, Territory Manager

F. Any correctly addressed notice that is refused, unclaimed, or undeliverable because of an act or omission of the party to be notified, will be deemed effective as of the first date the notice was refused, unclaimed, or deemed undeliverable by the postal authorities, messenger or overnight delivery service.

G. Either party may change its address or fax number by giving the other party notice of the change in any manner permitted by this Agreement. Any change in address or fax number that is not provided to the other party will not void delivery of any notice under this Agreement, and delivery to the last known address or fax number shall be deemed sufficient for notice under this Agreement.

XIX. PROHIBITION AGAINST ASSIGNMENT AND SUBCONTRACTING

This agreement and all exhibits are binding on the heirs, successors, and assigns of the parties. The Agreement may not be assigned or subcontracted by either City or Vendor without the prior written consent of the other.

XX. INTEGRATION; AMENDMENT

This Agreement represents the entire understanding of City and Vendor as to those matters contained in it. No prior oral or written understanding will be of any force or effect with respect to the terms of this Agreement. The Agreement may not be modified or altered except in writing signed by both parties. No waiver of any term or conditions of this Agreement shall be a continuing waiver thereof.

XXI. INTERPRETATION

The terms of this Agreement should be construed in accordance with the meaning of the language used and should not be construed for or against either party by reason of the authorship of this Agreement or any other rule of construction that might otherwise apply.

XXII. SEVERABILITY

If any part of this Agreement is found to be in conflict with applicable laws, that part will be inoperative, null and void insofar as it is in conflict with any applicable laws, but the remainder of the Agreement will remain in full force and effect.

XXIII. TIME OF ESSENCE

Time is of the essence in the performance of this Agreement.

XXIV. GOVERNING LAW; JURISDICTION

This Agreement will be administered and interpreted under the laws of the State of

California. Jurisdiction of any litigation arising from the Agreement will be in a court of competent jurisdiction within the county in which City is located.

XXV. COMPLIANCE WITH STATUTES AND REGULATIONS

Vendor will be knowledgeable of and will comply with all applicable federal, state, local, county, and city statutes, rules, regulations, ordinances, and orders.

XXVI. WAIVER OF BREACH

No delay or omission in the exercise of any right or remedy by a non-defaulting party on any default will impair the right or remedy or be construed as a waiver. A party's consent or approval of any act by the other party requiring the party's consent or approval will not be deemed to waive or render unnecessary the other party's consent to or approval of any subsequent act. Any waiver by either party of any default must be in writing and will not be a waiver of any other default concerning the same or any other provision of this Agreement.

XXVII. ATTORNEY'S FEES

Except as provided for herein above, in any dispute, litigation, arbitration, or other proceeding by which one party either seeks to enforce its rights under this Agreement (whether in contract, tort, or both) or seeks a declaration of any rights or obligations under this Agreement, the prevailing party will be awarded reasonable attorney's fees, together with any costs and expenses, to resolve the dispute and to enforce any judgment, including post-judgment attorney's fees costs and expenses and any attorneys' fees or costs incurred on appeal of any judgment.

XXVIII. EXHIBITS

All exhibits identified in this Agreement are incorporated into the Agreement by this reference.

XXIX. VENDOR'S AUTHORITY TO EXECUTE

The persons executing this Agreement on behalf of the Vendor warrant: (i) the Vendor is duly organized and existing under the appropriate state laws; (ii) they are duly authorized to execute this Agreement on behalf of the Vendor; (iii) by so executing this Agreement, the Vendor is formally bound to the provisions of this Agreement; and (iv) the entering into this Agreement does not violate any provision of any other Agreement to which the Vendor is bound.

By VENDOR: Vestis Services, LLC

_____
(Signature)

_____
(Typed Name)

_____

(Title)

CITY OF EL CENTRO
A Municipal Corporation and Charter City

_____
Mayor

ATTEST:

_____
City Clerk

APPROVED AS TO FORM:

By City Attorney

_____

Attachments:	Exhibit A	Scope of Services
	Exhibit B	Compensation Schedule
	Exhibit C	Levine Act

EXHIBIT A
SCOPE OF SERVICES

[ATTACH VENDOR'S PROPOSAL OR AGREED UPON SCOPE OF SERVICES]

CITY OF EL CENTRO
PUBLIC WORKS
Serving our community by sustaining and improving life

REQUEST FOR PROPOSALS

Uniform Rental and Laundry Services

RELEASE DATE: July 10, 2024

Contact Information:

City of El Centro
Public Works Department
307 W. Brighton Ave.
El Centro, Ca 92243
Phone: (760) 336-3152
Abraham Campos, Public Works Director/City Engineer

DUE DATE: August 8, 2024

TABLE OF CONTENTS

		Page
I.	Request for Proposals (RFP)	3
II.	Project Description	3
III.	Submittal Requirements and Selection Process	4
IV.	Project Schedule	7
V.	Scope of Services	8
VI.	Pick-up and Delivery Locations	14
VII.	References	15
Proposal Attachment A - Proposal Authorization		17
Proposal Attachment B - Current Agency or Business References		18
Proposal Attachment C – Fee Proposal Form		20
Proposal Attachment D – Levine Act Statement		24
Proposal Attachment E – Sample Agreement		26

I. REQUEST FOR PROPOSALS

NOTICE IS HEREBY GIVEN that the City of El Centro is requesting proposals from qualified service providers to provide uniform rental and laundry services to the City of El Centro.

Proposals will be received at the City of El Centro Public Works office, located at 307 W. Brighton Ave., El Centro, CA 92243, until **August 8**, at **4:00 p.m** with subject reading as follows:

Response for City of El Centro Uniform Rental and Laundry Services RFP
Attn: Abraham Campos, P.E.
Public Works Director/City Engineer

On a separate envelope, submit a hard copy of Attachment C – Fee Proposal to the same address and by the same date in a sealed envelope marked:

Fee Proposal for City of El Centro Uniform Rental and Laundry Services RFP
Attn: Abraham Campos, P.E.
Public Works Director/City Engineer

Proposals and Fee Proposals received after the stated deadline will not be accepted. Advance submittals are permitted. The City will not be liable for any costs incurred by the Proposer incidental to the preparation of proposals.

Submission of a proposal indicates acceptance by the Proposer of the conditions contained in this RFP unless clearly and specifically noted in the proposal submitted and confirmed in the contract between the City of El Centro and the Proposer selected.

Note: Late, emailed or faxed proposals will not be considered.

Add days in this Proposal are calendar days.

OBTAINING DOCUMENTS:

The RFP documents may be obtained by visiting Planet Bids website at https://pbsystem.planetbids.com/portal/41180/portal-home

II. PROJECT DESCRIPTION

The City of El Centro is seeking a qualified vendor to provide uniform and laundry services for approximately 70 City personnel. In addition, the vendor shall also provide miscellaneous door mats, towels, etc., as part of their service. This RFP does not include the purchase of items. The successful vendor shall provide all products, labor, equipment, tools, transportation and fuel, and insurance necessary to perform all of the services outlined in the RFP.

III. SUBMITTAL REQUIREMENTS AND SELECTION PROCESS

A. No proposal will be considered for award unless submitted in the format described in this Request for Proposal (RFP). The proposal must be fully complete and executed; this includes any forms included in this RFP. Proposers shall send five (5) copies of the completed proposals which will include; three (3) bound, one (1) unbound copies with a copy of this RFP attached to the front of each proposal and one (1) electronic copy (USB), with appropriate responses included.

Format: Proposal should be 8 ½ x 11 inches, printed two-sided on recycled paper with removable bindings, bound in a single document and organized in sections.

Each fee proposal must be submitted in a sealed envelope addressed to Abraham Campos, PE, Public Works Director/City Engineer, City of El Centro, 307 W. Brighton Ave., El Centro, California 92243, and delivered prior to the time and date specified in this document. Each sealed envelope containing a fee proposal must have, on the outside, the name of the Proposer, Proposer's address and in addition, must be plainly marked on the outside as follows:

Proposal : Fee Proposal for City of El Centro Uniform Rental & Laundry Services RFP
Filing Deadline: August 8 at 4:00 P.M.

B. Attention of Proposers is especially directed to the scope of work, which, in addition to the proposal and these instructions, are basis for evaluation and will be part of any contract with the successful Proposer. Any deviations from the scope of work in this notice shall be proper reason for rejection of all or any part of the proposal.

C. The City is an equal opportunity employer. The City, as well as its recipients, subrecipients, and contractors, will not discriminate in employment practices based on race, color, religious creed, ancestry, national origin, age, sex (includes sexual harassment), pregnancy (childbirth or related medical conditions), marital status, sexual orientation (heterosexuality, homosexuality and bisexuality), medical condition (cancer and genetic characteristics), mental or physical disability (includes HIV and AIDS), political affiliation/opinion, Veteran's status, request for family medical leave or any other protected category or association with such category.

D. The City reserves the right to modify this Request for Proposal (RFP) at any time. In the event it becomes necessary to modify or revise the RFP, a written amendment or addenda issued by the City is the only method allowed with respect to changes to the RFP. Addendums will be uploaded to Planet Bids. The RFP, contract documents, addenda, etc., may be downloaded free from Planet Bids website https://pbsystem.planetbids.com/portal/41180/portal-home

Questions concerning the RFP must be submitted via Planet Bids portal. All questions must arrive at least ten (10) calendar days prior to the proposal due date to allow time for distributing answers and/or clarifications.
No questions or inquiries may be directed to any individual(s) at the locations detailed in this document. All inquiries must be submitted in writing per the process described in this document. Attempts to contact any City employee other than the designated contact for this RFP may be cause for rejection of a submitted proposal. No questions will be answered after the 10-day period.

E. Proposals initially will be reviewed for compliance with these requirements. Only those found to be completed will be evaluated by a committee comprised of representatives from the various departments within the City. During the evaluation process, the City may request additional information.

F. The City reserves the right to seek supplementary information from any proposer at any time after official proposal opening and before the award.

G. Issuance of the RFP and receipt of proposals does not commit the City to award an agreement. The City reserves the right to postpone the RFP process for its own convenience, to accept or reject any or all proposals received in response to this RFP, to negotiate with other than the selected company should negotiations with the selected company be terminated, or to cancel any section of this RFP.

H. An award under this RFP will not be based solely on the lowest price. Proposals will be evaluated by a committee and each proposer will be scored on a point system. If an award is made, it may go to the Proposer with the highest score after negotiations.

Each proposer will be scored on the following point system, with a maximum of 100 points.

Sample Proposal Evaluation Form

FIRM NAME:		
Criteria	Max Points	Rating
Understanding of the work to be done	25	
Experience with providing similar services for comparable agencies	25	

Services quality	25	
Cost	20	
Quality of content and format proposal	15	
References	15	
Total	100	

I. Proposals shall remain valid for at least ninety (90) calendar days after the opening of the proposals.

J. The successful Proposer shall enter into a formal agreement with City which will be very similar in content to the Attachment D "Sample Agreement" which is provided for information purposes only and to help clarify City intent relevant to this Request for Proposal.

K. The term of the agreement shall be for a period of three (3) years, with the option to extend for two (2) additional one (1) year periods (or 1 additional 2-year period), for a total of up to five (5) years. In order to exercise this option the City must notify the Proposer in writing at the address provided in this agreement no later than 30 days before the expiration of this agreement. Prices shall remain firm for the first year of the agreement. Thereafter, requests for price increases shall be submitted by Proposer in writing 90 days prior to the annual anniversary date of the agreement to be effective for the subsequent year. Prices may be adjusted based on the Consumer Price Index, Pacific Cities and U.S. Average for all urban consumers, Western Cities Category "C" or 2.5% whichever is less. Any increase in excess of that set out here requires the written approval of the City Council by contract amendment.

L. The City may, at its sole option, terminate any contract that may be awarded as a result of this RFP at the end of any City Fiscal Year (June 30), for reason of non-appropriation of funds in the subsequent Fiscal Year. In such event, the City will give Proposer at least thirty (30) days written notice that such function will not be funded for the next fiscal period. In such event, the City will return any associated equipment to the Contractor in good working order, reasonable wear and tear excepted.

M. Prior to beginning any work, or delivering any equipment or material to be furnished under this proposal, the Proposer shall secure the appropriate Business License

from the City of El Centro. Business license information may be obtained by calling 760-337-4573 or e-mail us at businesslicense@cityofelcentro.org

Proposer must comply with any Federal or State of California License/Certification required to provide the services and also must comply with the Insurance Requirements for vendors document included in this RFP as Attachment A.

N. Proposer's Proprietary Information: Upon award, all documents provided by the successful Proposer shall become public record. All documents provided by any Proposers, other than the successful Proposer, shall become public record in their entirety and subject to disclosure, unless said documents are retrieved by the Proposer within ten (10) business days of the award. This shall also include, but is not limited to documents for projects for which all proposals are rejected and projects for which an award is not made for any reason. In the event that one or more proposals are returned to the bidding parties, it is the intent of the City that such documents shall not become public records of the City unless required by the California Public Records Act or other provisions of law.

O. It is the City's policy to encourage the purchase of supplies, services and equipment from vendors located within the boundaries of the City. Local vendors are sellers, vendors, suppliers and contractors who maintain places of business located within the limits of the City and who have a current City of El Centro business license. The local vendor outreach policy shall not apply to those Agreements where State or Federal law, or other laws or regulations, preclude such a preference.

Contractors will, to the greatest extent feasible, attempt to incorporate local area businesses as subcontractors and suppliers. Contractors will, upon request, provide records showing the outreach efforts made to local businesses to demonstrate that they have made a reasonable effort to inform local businesses of the opportunity.

IV. PROJECT SCHEDULE

TASK	TENTATIVE DATE
1. Request for Proposal Release Date	July 10, 2024
2. Questions Due Date	July 26, 2024
3. Proposal Due Date	August 8, 2024
4. Selection and Award	September , 2024

5. Notice to Proceed	September , 2024
6. Commencement Date	October , 2024

V. SCOPE OF SERVICES

A. Garments

Vendor shall provide cleaned work garments to City employees. Garment ownership shall remain with the vendor.

The term "new" and "used" shall be defined as follows:

a. "New" shall mean garments that have not previously been worn or otherwise put into use and are free from defects, mending or repairs. Garments that are factory irregulars or blemished shall not be accepted as new.

b. "Used" shall mean garments issued by the service provider and worn by other clients of the service provider then returned to the service provider due to contract termination. Used garments shall have at least ½ of their service life left and may have some small mending or repairs. Garments that are excessively faded, excessively mended or that have stains or defects, non-mended holes or tears shall not be accepted as used.

c. "Replacement Garment" shall be provided no later than the next delivery. It is preferred that a replacement garment, or temporary garment be provided within 24-48 hours. However, if the replacement garment cannot be provided within 24-48 hours, the vendor shall notify the appropriate City representative of the reason why and date the replacement will be made. The weekly cost for the missing replacement garment(s) shall be deducted from subsequent invoice(s).

d. Specified styles and cuts shall be available in any/all required sizes at no additional charge. All pants shall have fully functional belt loops.

e. Pricing shall apply to all sizes, including sizes the vendor does not normally stock. The City shall pay no extra fees for non-stock sizes that the vendor may need to purchase to fulfill this contract.

f. New garments to be provided at the beginning of this contract and each two-year period thereafter.

g. Eleven (11) shirts and eleven (11) pants should be inventoried for each employee. This includes a "swing" suit for exchange day.

h. Number of changes per week; five (5) shirts and five (5) pants.

i. Shirts - Executive type dress shirt.

j. Shirts - 65% Dacron, 35% cotton.

k. Shirts – Polo

l. Shirts – Fire Rated; Class – HRC2
Arc Rating – ATPV 8.0 cal/cm2 (minimum)

m. Pants - 65% Dacron, 35% cotton; western or regular cut. Expandable waist option.

n. Pants – Fire Rated; Class – HRC2
Arc Rating – ATPV 8.0 cal/cm2 (minimum). Expandable waist option

o. Coveralls.

p. Color - A variety of colors to be specified and/or confirmed at time of fitting. The only requirement is that some employees must be clothed in "safety orange" shirts.

q. Clothing to be delivered each week to the various departments, on hangers, laundered pants and shirts shall be pressed and sorted by employee. Shirts shall not have "points" from wire hangers on the shoulders. Pickup and delivery days shall be coordinated with each division.

B. Emblems and Name Tags

Vendor shall supply City emblems with clothing.

a. Vendor to provide name tags on garments for each employee. Name tag specifications shall be silk screened with a merrow stitched border.

b. Emblem shall be attached above the chest pocket on the left side of the shirt.

c. If clothing is exchanged for any reason, vendor will transfer old emblems and name tags to new garments.

C. Enrollment Process

a. Processes: Upon award of contract, vendor shall provide the City representative the name and telephone number of the vendor representative and route driver(s) handling the City's account. In addition, the names and telephone numbers of backup personnel who are qualified to receive and resolve any/all complaints that arise during the performance of this contract.

Upon execution of the contract by the vendor and the City, a Notice to Proceed will be issued by the Office of the City Clerk. Upon receipt of the Notice to Proceed, the vendor shall arrange meetings with all participating department/divisions to determine specific employee requirements.

b. Fitting: Within five (5) business days from the date of the Notice to Proceed, the vendor shall provide a meeting schedule to the City representative for individual measurements of all employees. The meeting schedule shall be established by department/division. Measurements for the shirts shall include the sleeve length, neck size, chest size and waist length. Short and long shirts shall be provided for individual body sizes. Measurements for the pants shall include the waistline, inseam length and hip, if necessary, to assure a proper fit in the hips/seat area. Each person must be individually measured and fitted prior to first delivery of garments. During the first two weeks of service, vendor shall make necessary adjustments and provide necessary replacements at no additional cost.

c. Long Sleeve/Short Sleeve: Each employee shall choose short sleeve or long sleeve shirts, or a combination of both. The option to adjust between the number of long sleeve and short sleeve shirts throughout the year without a change in price shall be available to the City.

d. Coveralls: Coveralls measurements shall include chest size and length of legs and arms.

e. The vendor shall keep the report current throughout the term of the contract. The City representative shall receive an updated report upon request.

f. Service Start-Up: Vendor shall furnish all garments within thirty (30) calendar days from the date of "Notice to Proceed". All clothing provided to city shall be new upon commencement of contract.

Identification of Uniforms: Employee name shall be identified in or on each garment. Once new garments are issued to employees, those garments shall be laundered and returned to same employee and shall not be reissued to a different employee unless the garments are exchanged by the employee (e.g. change of sleeve length or change of size), or the employee is on extended leave or terminated.

D. <u>Additions and Deletions</u>

a. The City shall have the right to add employees at any time during the term of the contract. There shall be no fee to add employees and the weekly service rates will be as stated under the original contract.

b. When service for new employee is added during the contract period, garments shall be new, and equal to the current condition of those garments placed into service at start of contract.

c. The City may terminate services for any employee at any time without a monetary penalty being imposed by the vendor. Upon termination, all uniforms will be turned into the vendor. The City will pay for any missing or damaged garments in accordance with the loss/ruin fee.

d. The City shall notify the vendor to discontinue services in the event of extended absences due to vacation, extended illness or leave of absence. Vendor may choose to collect, or not to collect garments depending on the length of the absence.

e. When an employee transfers from one department/division to a different department/division, notification will be given to vendor.

E. Inventory Control

a. Pick-up and delivery at all locations shall be made once a week. Pickup and delivery day to be coordinated with each division.

b. When soiled garments are picked up they shall be counted at the pick-up location with a garment control list showing the number of garments picked up for each employee. The list will be given to the department/division at the time of the pick-up. Garments shall be inspected for special handling (i.e.: pre-spot, repair, maintenance), at the time of pick up.

c. All garments shall be laundered and maintained in a condition acceptable to the City. Laundered garments shall be clean and free from any tears, grime, soiling, sand, dirt, lint, odors, or paint, ink or grease stains.

d. If incoming garments have not been laundered satisfactorily by the vendor, vendor shall be notified and the weekly cost for the garment(s) shall be deducted from payment. When there is a disagreement between the vendor and the department/division about such garments, or when the problem becomes chronic or ongoing, the department/division shall notify the City representative to resolve the problem.

e. Vendor shall be notified of any missing garment(s) and the weekly cost for the garment(s) shall be deducted from payment.

f. Any garments lost by vendor shall be replaced at no additional cost.

F. Service Tag System

a. Vendor shall implement some type of tag system to designate garments in need of repair or stain removal. Repairs and maintenance of all garments shall be done with the same fabric as the garment including thread or transparent thread. Repairs/stain removal shall be completed by next delivery.

   Repair/stain removal shall be at no cost to the City. If the garment cannot be repaired or stain removed, the garment will be replaced at replacement cost.

G. Replacement of Garments

a. Garments must at all times, be in a condition acceptable to the City. Garments that, through normal use, are determined to be in an unacceptable condition shall be replaced at no cost to the City. Replacement garments may be used subject to City approval.

b. Garments lost or damaged beyond repair due to City's negligence, shall be replaced by vendor within two (2) weeks. The City will pay the appropriate replacement fee as defined. The replacement garment may be new or used, subject to City approval. However, if the replacement garment cannot be provided within two (2) weeks, the vendor shall notify the appropriate City representative of the reason why and date the replacement will be made.

   1. Garments lost or damaged beyond repair by City shall be replaced at City's expense. The cost of replacement shall be based on the vendor's quoted replacement cost for each new garment and shall be adjusted downward one-month for each month of usage.

   2. The City will make a good faith effort to return vendor's merchandise at the end of the contract.

   Vendor must maintain clothing in a good, serviceable condition throughout the term of the service agreement. Garments in a badly worn, frayed or torn condition from normal use shall be replaced at the next regular delivery date. Routine small repairs will be acceptable so long as the image of the employee and City are not below standard.

   City will be responsible for lost and damaged garments by the employee.

   There is no provision for the employee to change between short and long sleeves throughout the year.

H. Complaint Procedure

For complaints involving the replacement of garments, replacement shall be made as quickly as possible, and no later than the next delivery date. If the replacement cannot be made within that time, the vendor representative shall notify the department/division

and give the date when the replacement will be made. The weekly cost for the missing replacement garment(s) shall be deducted from the subsequent invoice.

I. Miscellaneous Services

Vendor shall provide miscellaneous services

a. Final required count will be determined after contract award.
   All towels shall be delivered in acceptable condition at all times; stains, holes, or rips shall not be acceptable.

J. Cancellation

This service agreement may be canceled by the City of El Centro any time service is deemed unsatisfactory. A thirty (30) day written notice will be given prior to cancellation.

K. Invoicing

Vendor shall invoice once per month for all services rendered during the invoice period. An invoice shall be provided for uniform rental services and a separate invoice for miscellaneous services. The invoices shall have sufficient detail for services provided (billing period, department/division name, department/division address, account number, itemized list of garments by employee, quantity, unit price and total charges) and be divided by City department/divisions as follows:

- Public Works Department
  a. Motor Vehicle (9640)
  b. Street Maintenance (3201)
  c. Collection/Distribution (9510)
  d. Facility Maintenance (1801)
  e. Water Treatment Plant and Meter Shop (9511)
  f. Wastewater Treatment Plant (9521)

- Community Services Department
  a. Parks (5101)
  b. Recreation Services (5201)
  c. Youth Center (5204)
  d. Aquatic Center (5206)

L. Usage Reports

Upon request, the vendor shall provide a report of items rented by the City. The report of rented items shall be sorted by department/division, and state the items description, inventory amount (weekly, monthly, bi-annual or annual where applicable), and actual inventory on hand.

VI. PICK-UP AND DELIVERY LOCATIONS

a. All items (garments and materials) shall be picked up on a weekly basis, cleaned and returned the following week at the delivery points specified herein, on the same day of each week and all items delivered on that day (agreed between City and vendor). Deliveries shall be made between the hours of 8:00 A.M. and 3:00 P.M. A copy of the finalized schedule shall be given to the City representative within one week after the employees' measurements have been taken. Changes in the schedule may change throughout the life of the contract (negotiated between City and vendor).

b. Vendor shall provide sufficient size and quantity of laundry bags or containers appropriate for soiled garments as needed at each location at no additional charge.

c. Vendor shall provide a delivery ticket by department/division within each delivery location. Each delivery ticket shall contain the following information.

- Vendor's Name
- Date of Delivery
- Name of department/division
- Delivery Address
- Itemized list of garments/supplies by employee name
- Quantity, unit price, extension of each item and total charges

d. Vendor shall deliver garments and miscellaneous materials to the following locations:

Department of Public Works Main Office
307 W. Brighton Ave
El Centro, CA 92243
7:00 A.M. - 3:00 P.M.
760-337-4505

Department of Public Works – Facility Maintenance
1275 W. Main Street
El Centro, CA 92243
7:00 A.M. - 3:00 P.M.
760-337-4509

Department of Public Works - Wastewater Treatment Plant
2255 N. La Brucherie Avenue
El Centro, CA 92243
7:00 A.M – 3:00 P.M.

760-337-4562

Department of Public Works - Water Treatment Plant
1101 W. Danenberg Drive
El Centro, CA 92243
7:00 A.M – 3:00 P.M.
760-337-4575

Department of Community Services - Parks
1073 Ross Avenue
(back of alley)
El Centro, CA 92243
7:00 A.M – 3:00 P.M.
760-337-4555

Department of Community Services - Recreation
375 S. 1st Street
El Centro, CA 92243
8:00 A.M – 5:00 P.M.
760-337-4555

Department of Community Services - Aquatics
540 Park Avenue
El Centro, CA 92243
7:00 A.M.- 3:00 P.M.
760-335-4550

Department of Community Services – Conrad Harrison Youth Center
750 Park Avenue
El Centro, CA 92243
7:00 A.M. – 3:00 P.M.
760-337-4570

VII. REFERENCES

Vendor to supply a minimum of five (5) references with proposal submittal; i.e. list agencies you are currently providing with uniforms and laundry service.

Proposers must complete the Proposal Authorization form, the Uniform and Laundry Service Proposal and References Form supplied with this Request for Proposal.

All proposers must review the terms and conditions of the attached agreement and be able to provide the services as well as the insurance requested.

EXHIBIT B
COMPENSATION SCHEDULE

[ATTACH DOCUMENT WITH SCHEDULE OR OUTLINE COMPENSATION]

PROPOSAL ATTACHMENT C – FEE PROPOSAL FORM

CITY OF EI CENTRO

UNIFORM AND LAUNDRY SERVICE PROPOSAL

1. Weekly cost per employee, per week; five (5) shirts and five (5) pants; 65% Dacron and 35% Cotton. Include name tags on shirts. $ 4.84 /each

2. Weekly cost per employee, per week; five (5) executive dress shirts and five (5) pants; 65% Dacron and 35% Cotton. Include name tags on shirts. $ 5.39 /each

3. Weekly cost per employee, per week; five (5) Polo shirts and five (5) pants; 65% Dacron and 35% Cotton. Include name tags on shirts. $ 5.39 /each

4. Weekly cost per employee, per week; Five (5) Fire Rated shirts and five (5) Fire Rated pants; Class – HRC2 Arc Rating – ATPV 8.0 cal/cm2 (minimum) Include name tags on shirts. $ 9.90 /each

5. Weekly cost per employee three (3) coveralls. $ 1.14 /each

6. Weekly cost per employee, per week; three (3) GO-1535 Lab Coats, to include name tags on coats $ .81 /each

7. Weekly cost per employee, per week; Eleven (11) GP-1172 Flex Fit Pants $ 2.42 /each

8. Replacement cost for lab coats which are lost or damaged by the employee $ 17.00

9. Replacement cost for Flex Fit Pants which are lost or damaged by the employee $ 24.00

10. Replacement cost for shirts which are lost or damaged by the employee. $ 14.50 standard shirt

11. Replacement cost for pants which are

lost or damaged by the employee.	$ 18.50 standard pant
12. Exchange shirts; different size.	$ 1.00 per piece
13. Exchange pants; different size.	$ 1.00 per piece
TOTAL UNIFORM AND LAUNDRY SERVICE COST (ITEMS 1-13)	$ 105.89

MISCELLANEOUS SERVICES PROPOSAL:

14. Weekly cost per Floor Mat: 3' X 5'	$ 1.50
15. Weekly cost per Super Tread Floor Mat: 3' X 5	$ 1.50
16. Weekly cost per Floor Mat: 4' X 6'	$ 2.50
17. Weekly cost per Dust Mop: 36"	$ .55
18. Weekly cost per Wash Cloth:	$ .05
19. Weekly cost per 24x48 Towel	$ .18
20. Weekly cost per Shop Towel per 100	$ 5.00
21. Weekly cost per Windshield towel	$ .05
22. Weekly cost per Cotton Roll Towel	$ 1.50
23. Weekly cost per First Aid Kit	$ 14.99
24. Weekly cost per Hand Sanitizer	$ 5.00
25. Weekly cost per Air Freshener	$ 2.00
26. Weekly cost per Fender Cover	$ .25
27. Weekly Cost per TO-0108 Microfiber Towel	$ .05
28. Weekly Cost per DP-0018 24 Inch Mop	$ .55
29. Weekly Cost per DP-0018 48 Inch Mop	$ .55

30. Weekly Cost per CE-0102 Mop Handle	$ 0 n/c
31. Weekly Cost per CE-0112 24 Mop Frame	$ 0 n/c
32. Weekly Cost per CE-0112 36 Mop Frame	$ 0 n/c
33. Weekly Cost per CE-0112 48 Mop Frame	$ 0 n/c
34. Weekly Cost per CE-0184 Roll Towel Cab	$ 0 n/c
35. Weekly Cost per DM-0025 Scrapper Mat	$ 1.50
36. Weekly Cost per CE-0086 8 Bank Lockers	$ 0 n/c
37. Weekly Cost per CE-0120 Bag Stands	$ 0 n/c
38. Weekly Cost per XX-0297 Bag	$ 0 n/c
39. Weekly Cost per OW-1271 Bio Screen	$ 1.00 /each
40. Loss/Ruin Charge TO-0108 Microfiber Towel	$ 1.25
41. Loss/Ruin Charge DP-0018 24 Inch Mop	$ 12.00
42. Loss/Ruin Charge DP-0018 48 Inch Mop	$ 12.00
43. Loss/Ruin Charge CE-0102 Mop Handle	$ 12.00
44. Loss/Ruin Charge CE-0112 24 Mop Frame	$ 12.00
45. Loss/Ruin Charge CE-0112 36 Mop Frame	$ 12.00
46. Loss/Ruin Charge CE-0112 48 Mop Frame	$ 12.00
47. Loss/Ruin Charge CE-0184 Roll Towel Cab	$ 40.00
48. Loss/Ruin Charge DM-0025 Scrapper Mat	$ 67.00
49. Loss/Ruin Charge CE-0086 8 Bank Lockers	$ 150.00
50. Loss/Ruin Charge CE-0120 Bag Stands	$ 12.00
51. Loss/Ruin Charge XX-0297 Bag	$ 5.00
52. Loss/Ruin Charge OW-1271 Bio Screen	$ 1.00

TOTAL MISCELLANEOUS SERVICES COST

(ITEMS 14-52) $ 386.97

VENDOR - PLEASE NOTE:

Prices include any and all expenses by the vendor. This includes, but is not limited to, name tags, fittings, and preparation charges; i.e. sewing emblems and name tags on garments, etc.

***Submit in a separate sealed envelope**

PROPOSAL ATTACHMENT D

Levine Act Statement

California Government Code § 84308, commonly referred to as the "Levine Act," precludes an officer of a local government agency from participating in the award of a contract if he or she receives any political contributions totaling more than $250 in the 12 months preceding the pendency of the contract award, and for three months following the final decision, from the person or company awarded the contract. This prohibition applies to contributions to the officer, or received by the officer on behalf of any other officer, or on behalf of any candidate for office or on behalf of any committee.

This statement must be provided for the company and for each consultant who will work with the City.

City of El Centro Council Members as of the date of this RFP are as follows:

Sylvia Marroquin
Edgard Garcia
Sonia Carter
Tomas Oliva
Martha Cardenas-Singh

1. Have you or your company, or any agent on behalf of you or your company, made any political contributions of more than $250 to any City of El Centro Council Member in the 12 months preceding the date of the issuance of this RFP? _____ YES X NO
   If yes, please identify the Council Member: _____

2. Do you or your company, or any agency on behalf of you or your company, anticipate or plan to make any political contributions of more than $250 to any City of El Centro Council Member in the three months following the award of the contract? _____ YES X NO
   If yes, please identify the Council Member: _____

Answering yes to either of the two questions above does not preclude City of El Centro from awarding a contract to your firm. It does, however, preclude the identified Council Member from participating in the contract award process for this contract.

August 8, 2024
DATE

[redacted]
(NAME)

Vestis Sevices LLC

(NAME OF COMPANY)

***This form is required with Proposal**

Adopt Resolution. 24- , RESOLUTION OF THE CITY COUNCIL AUTHORIZING THE EL CENTRO POLICE DEPARTMENT TO PARTICIPATE IN THE BUREAU OF JUSTICE ASSISTANCE PATRICK LEAHY BULLETPROOF VEST PARTNERSHIP GRANT PROGRAM.

CITY MANAGER'S RECOMMENDATION:

Adopt Resolution. 24- , RESOLUTION OF THE CITY COUNCIL AUTHORIZING THE EL CENTRO POLICE DEPARTMENT TO PARTICIPATE IN THE BUREAU OF JUSTICE ASSISTANCE PATRICK LEAHY BULLETPROOF VEST PARTNERSHIP GRANT PROGRAM.

FISCAL IMPACT:

With the acceptance of the Bulletproof Vest Partnership Grant, a corresponding budget reimbursement account of $8,937.59 will be processed and included as part of the adjusted Fiscal Year 2024/2025 Budget. No match by the City is required.

STRATEGIC PLANNING PROGRAM 2022-2027 RELATION:

Community Health, Safety & Welfare

DUE DILIGENCE CHECK FOR CONTRACTORS/CONSULTANTS: DID THE DEPARTMENT VERIFY CURRENT EL CENTRO BUSINESS LICENSE, CONTRACTOR'S LICENSE, REFERENCE CHECKES, INSURANCE, ETC.:

N/A

BACKGROUND:

The Bureau of Justice Assistance has conditionally approved the city’s application for funding under the Bulletproof Vest Partnership (BVP) Grant in the amount of $8,937.59. Our BVP grant will provide the El Centro Police Department with funding to cover half of the cost to purchase vests for our uniformed staff.

DISCUSSION:

The Bulletproof Vest Partnership (BVP) Grant Act of 1998 is a unique U.S. Department of Justice initiative designed to provide a critical resource to state and local law enforcement. The BVP program provides up to 50 percent matching funds for agencies looking to purchase body armor for their officers. Federal funds are used to support the purchase of vest in the BVP Program. BVP makes "grants" to law enforcement agencies to purchase vests; however, these grants come only after the agency has purchased and is seeking reimbursement or payment for up to half the cost of eligible vests.

The U.S. Department of Justice is committed to improving officer safety and has undertaken research to review and analyze violent encounters and law enforcement officer deaths and injuries. Due to an increase in the number of law enforcement officer deaths over the years, coupled with the renewed efforts to improve officer safety, all law

enforcement agencies benefitting from the BVP Program must have a “mandatory wear” policy in effect. The El Centro Police Department is in compliance with a mandatory wear policy.

CONCLUSION:

Adopt Resolution. 24- , RESOLUTION OF THE CITY COUNCIL AUTHORIZING THE EL CENTRO POLICE DEPARTMENT TO PARTICIPATE IN THE BUREAU OF JUSTICE ASSISTANCE PATRICK LEAHY BULLETPROOF VEST PARTNERSHIP GRANT PROGRAM.

ATTACHMENTS:

1. FY24 BVP Resolution
2. FY24 BVP Grant Award Notification
3. FY24 BVP Grant Application Status

RESOLUTION NO 24-

RESOLUTION OF THE CITY COUNCIL AUTHORIZING
THE EL CENTRO POLICE DEPARTMENT TO PARTICIPATE IN
THE BUREAU OF JUSTICE ASSISTANCE
PATRICK LEAHY BULLETPROOF VEST PARTNERSHIP GRANT PROGRAM

WHEREAS, the Bureau of Justice Assistance (BJA) provides grant funding to aid law enforcement with up to fifty percent of the cost of body armor vests purchased for law enforcement officers and the El Centro Police Department submitted an application for a grant; and

WHEREAS, BJA has awarded eight thousand, nine hundred and thirty-seven dollars and fifty-nine cents ($8,937.59) to the El Centro Police Department for the purpose of purchasing and/or replacing body armor vests; and

WHEREAS, the El Centro Police Department now is required to execute a certificate of acceptance.

NOW, THEREFORE THE CITY COUNCIL OF THE CITY OF EL CENTRO, CALIFORNIA, DOES HEREBY RESOLVE AS FOLLOWS;

1. That the foregoing is true, correct and adopted.

2. That the City Council hereby accepts the grant funds of eight thousand, nine hundred and thirty-seven dollars and fifty-nine cents ($8,937.59) for the Program.

3. That the City's Police Chief is authorized to execute, on behalf of the City, the grant award agreement, if any, for the Program, a copy of which will be on file in the Office of the City Clerk, including any extensions or amendments thereof.

4. That the City agrees to comply with all requirements for the Program (including any extensions or amendments thereof) and that funds will be appropriated as required thereby.

5. That grant funds received hereunder shall not be used to supplant expenditures controlled by this body.

PASSED AND ADOPTED at a regular meeting of the City Council of the City of El Centro held on the day of , 2024

CITY OF EL CENTRO

By _____
Sylvia Marroquin, Mayor

10/2024/cdz/A24-0173/Reso/BJAGrant

ATTEST:

By _____
Norma Wyles, City Clerk

APPROVED AS TO FORM:

Office of the City Attorney

By _____
Elizabeth Martyn, City Attorney

STATE OF CALIFORNIA)
COUNTY OF IMPERIAL) ss
CITY OF EL CENTRO)

I, Norma Wyles, City Clerk of the City of El Centro, California, do hereby certify that the foregoing Resolution No. 24- was duly and regularly adopted at a regular meeting of the City Council of the City of El Centro, California, held on the day of , 2024, by the following vote:

AYES:
NOES:
ABSENT:
ABSTAINED:

By _____
Norma Wyles, City Clerk

Rene McNish

From: Bureau of Justice Assistance <BJA@public.govdelivery.com>
Sent: Thursday, September 26, 2024 9:27 AM
To: Rene McNish
Subject: BJA Patrick Leahy Bulletproof Vest Partnership (BVP) – FY 2024 Award Announcement

CAUTION: This email originated from outside of the El Centro Police Department. Do not click links or open attachments unless you recognize the sender and know the content to be safe.

View as a webpage / Share

Dear BVP Applicant:

The Bureau of Justice Assistance (BJA) is pleased to inform you that your jurisdiction will receive an award under the Fiscal Year (FY) 2024 Patrick Leahy Bulletproof Vest Partnership (BVP) solicitation. These funds have been posted to your account in the **BVP System**. A complete list of FY 2024 BVP awards is now available at the following link: 2024 BVP awards.

Important: Jurisdictions must be registered and include updated banking information in the System for Award Management (SAM) (https://www.sam.gov/SAM/) to receive reimbursement. For more information about renewing and updating your existing SAM registration, or registering in SAM as a new entity, please visit: https://sam.gov/content/help. The SAM Helpdesk can be reached at 866-606-8220.

The FY 2024 award may be used for National Institute of Justice (NIJ) compliant armored vests that were ordered after April 1, 2024. The deadline to request payments from the FY 2024 award is August 31, 2026, or until all available funds have been requested. Awards will not be extended past that date, and any unused funds will be forfeited.

As a reminder, body armor vests purchased with BVP funds must have been tested through the NIJ Compliance Testing Program and found to comply with the most current NIJ body armor standards, appear on the NIJ Compliant Products List as of the date the body armor was ordered, be uniquely fitted, and be made in the United States. In addition, applicants must have a written mandatory wear policy for uniformed patrol officers in place at the time of application.

In addition, the federal portion of the costs for body armor vests purchased under the BVP Program may not exceed 50 percent. However, jurisdictions may request a financial or natural disaster hardship waiver during the payment request process and receive up to 100 percent of the cost of each body armor vest submitted for reimbursement. Additional information regarding match waivers can be found in the BVP FAQs, and detailed instructions on the process for requesting a waiver and the documentation required can be found in the Submitting Payment Requests in BVP User Guide.

Please contact the BVP Helpdesk at 1-877-758-3787 or email vests@usdoj.gov if you have any questions regarding the above information. Please also visit the BVP website for additional information regarding the BVP Program.

In addition, please visit BJA's Officer Robert Wilson III Preventing Violence Against Law Enforcement Officers and Ensuring Officer Resilience and Survivability (VALOR) Initiative website to obtain other information regarding officer safety. The VALOR Initiative is a comprehensive set of programs that deliver no-cost officer safety, wellness, resilience training, resources, and technical assistance to law enforcement throughout the country. VALOR brings together the latest research and practices to address current and emerging officer safety and wellness issues and threats. Please see the VALOR Initiative Overview booklet for additional details about this initiative.

Sincerely,

BVP Program Team
Bureau of Justice Assistance

https://www.ojp.gov/program/bulletproof-vest-partnership

PUBLIC SAFETY OFFICERS' BENEFITS (PSOB) PROGRAM

Enacted in 1976, the PSOB Program provides death, disability, and education benefits to those eligible for the program. For details regarding these federal benefits for law enforcement officers, firefighters, and other first responders who have died or become catastrophically injured in the line of duty, call the PSOB Office at 888-744-6513 or visit us online at online.

BJA offers many resources, training and technical assistance, and policy development services to support local, state, and tribal governments in achieving safer communities.

If you haven't already, subscribe to the News From BJA subscription list to stay up to date on the latest information and news from BJA. If you are already a subscriber, update your subscription preferences to receive information that is most relevant to you.

This email was sent to rmcnish@ecpd.org using GovDelivery Communications Cloud on behalf of Department of Justice Washington DC

GOVDELIVERY

APPLICATION DETAILS

APPLICATION PROFILE

Participant	EL CENTRO CITY
Fiscal Year	2024
Number of Agencies Applied	0
Total Number of Officers for Application	49
Number of Officers on Approved Applications	49

APPLICATION PROFILE

Fiscal Year		2024
Vest Replacement Cycle		5
Number of Officers		49
Number of Emergency Replacement Needs	**Number of Stolen or Damaged**	9
	Number of Officer Turnover	14

APPLICATION DETAILS

NIJ#	Quantity	Unit Price	Extended Cost	Tax Shipping and Handling	Total Cost
BA-3A00S-MR02	23	$784.10	$18,034.30	$64.69	$18,098.99
Grand Totals	**23**		**$18,034.30**	**$64.69**	**$18,098.99**

AWARD SUMMARY FOR FY2024 REGULAR FUND

Funds Type	Eligible Amount	Award	Date Approved	Status
Regular Fund	$18,098.99	$8,937.59	09/26/24	Approved by BVP
Grand Totals:	$18,098.99	$8,937.59		

RETURN

Approval of Plans and Specifications for the Wastewater Treatment Plant UV Disinfection Improvements.

CITY MANAGER'S RECOMMENDATION:
Approve the plans and specifications for the Wastewater Treatment Plant UV Disinfection Improvements project and authorize staff to release it for public bidding.

FISCAL IMPACT:
No Impact to the general fund. This project is funded by Waste Water Enterprise funds. The engineer's estimate is $1,100,000. The requested budget is as follows, which will be updated once bids are received.

FY 2024 FY budgeted Waste Water Enterprise Funds -	$600,000
Requested additional Waste Water Enterprise Funds -	$500,000
Total Waste Water Enterprise Funds	$1,100,000

STRATEGIC PLANNING PROGRAM 2022-2027 RELATION:
Environmental Sustainability & Infrastructure

DUE DILIGENCE CHECK FOR CONTRACTORS/CONSULTANTS: DID THE DEPARTMENT VERIFY CURRENT EL CENTRO BUSINESS LICENSE, CONTRACTOR'S LICENSE, REFERENCE CHECKES, INSURANCE, ETC.:
N/A

BACKGROUND:
The City of El Centro Wastewater treatment facility treats and discharges the city's sewer collection system into the IID's drainage system, which ultimately makes it way to the Salton Sea. UV Disinfection is the last step in the treatment process prior to discharge. Currently, the existing UV lamps are reaching the end of their useful life and the current system is now obsolete and will soon no longer be serviceable. Failure to replace the UV lamps may bring the wastewater treatment plant out of compliance, resulting in State violations.

The City's Public Works staff took to Council on December 07, 2021, the approval of a vendor agreement with Trojan Technologies Group for the Purchase of Equipment necessary to replace the UV disinfection units and necessary equipment. The City of El Centro Council approved the purchase under Resolution No. 21-95.

DISCUSSION:
Public Works staff contracted NV5 to provide design services for the project, including plans and technical specifications to incorporate the purchased Trojan UV disinfection units into the City's current concrete channel that holds the current lamps and UV disinfection system. Currently, the equipment purchased from Trojan is with the City of El

Centro Public Works department and will be furnished during construction. The project will install the already purchased units as well as upgrade some of the electrical equipment, minor adjustments to the concrete channel structure, and install two pre-manufactured storage sheds to house certain equipment.

Below is a tentative schedule for this project:

Approval of Plans and Specifications - November 5, 2024
Advertise Project - November 15, 2024
Pre-Bid Meeting - December 3, 2024
Bid Opening - December 19, 2024
Construction Award - January 21, 2025
Construction Commence - February 10, 2025
Construction Complete - May 12, 2025

CONCLUSION:

Approve the plans and specifications for the Wastewater Treatment Plant UV Disinfection Improvements project and authorize staff to release for public bidding.

ATTACHMENTS:

1. WWTP UV Disinfection Specifications - Signed
2. 20241028-UV_FinalPlans-Signed 11x17

City of El Centro, California

Bid Proposal, Contract Documents and Specifications

For

WASTEWATER TREATMENT PLANT UV DISINFECTION IMPROVEMENTS

For use in conjunction with "Standard Specification for Public Works Construction," 2024 Edition, together with subsequent annual supplements as published by Building News, Inc.

APPROVED:

Abraham Campos, P.E.
Director of Public Works/City Engineer

WASTEWATER TREATMENT PLANT UV DISINFECTION IMPROVEMENTS

TABLE OF CONTENTS

		PAGE
NOTICE INVITING SEALED PROPOSALS (BIDS)	**NIB**	**1 - 7**
BIDDING DOCUMENTS	**BD**	**1 - 20**
CONTRACT DOCUMENTS	**CD**	**1 - 18**
Agreement	**CD**	**2 - 13**
Performance Bond	**CD**	**14-15**
Payment Bond	**CD**	**16-17**
GENERAL CONDITIONS	**GC**	**1-66**
SUPPLEMENTAL GENERAL CONDITIONS	**SGC**	**1 - 3**
TECHNICAL SPECIFICATIONS		

NOTICE INVITING BIDS

RECEIPT OF BIDS: Sealed Bids will be received at the office of the City Clerk, City of El Centro, OWNER of the WORK, located at 1275 Main Street, El Centro, CA 92243, until December 19, 2024, at 2:00 p.m. for the construction of the "**WASTEWATER TREATMENT PLANT UV DISINFECTION IMPROVEMENTS**"

DESCRIPTION OF WORK: The WOR K includes but is not limited to:

The work shall include the replacing of two existing UV disinfection units with two new UV disinfection units including minor modifications to the existing UV disinfection channels. Installation of two new pre-engineered mechanical buildings to house equipment. Minor concrete, minor aggregate base, and electrical.

The scope of work is more specifically described on the construction plans and in these Specifications.

SITE OF WORK: The site of the WORK is located at the City of El Centro's Wastewater Treatment Plant located at 2255 North La Brucherie Avenue.

COMPLETION OF WORK: The WORK must be completed within (90) consecutive Calendar Days after the commencement date stated in the Notice to Proceed.

OPENING OF BIDS: The Bids will be publicly opened and read at 2:00 PM on December 19, 2024 at the above-mentioned office of the City Clerk's.

OBTAINING CONTRACT DOCUMENTS: The Contract Documents are entitled "**WASTEWATER TREATMENT PLANT UV DISINFECTION IMPROVEMENTS**"

The Contract Documents may be obtained by download free at Planetbids by visiting City of El Centro website and selecting "Public Works (Planetbids) from the "DOING BUSINESS" drop down, Bids and Proposal tab, or at the following link
https://www.planetbids.com/portal/portal.cfm?companyID=41180

PRE-BID CONFERENCE: A mandatory Prebid Conference for prospective Bidders will be held at the City of El Centro at 10:00 AM (prevailing local time), on December 03, 2024. The meeting will be held at RDA Conference Room A located at 1249 W. Main St. El Centro, CA. The object of the meeting is to acquaint Bidders with the site conditions and mandatory bidding requirements and subcontractors with subcontracting and material supply opportunities. At that meeting, the City of El Centro's Equal Opportunity Program goals and reporting procedures also will be discussed.

QUESTIONS: Technical questions must be submitted through Planetbids. Should Planetbids be unavailable questions should then be directed to the OWNER at f_deleon@cityofelcentro.org

Questions must arrive at least (10) calendar days prior to the bid opening to allow time for distributing answers and/or clarifications to plan holders. Responses to questions that may be asked will be provided by Addendum. No oral comments shall be of any force or effect with respect to this solicitation.

CITY'S RESPONSES: Responses to questions asked may be provided via Addenda.

ALL SUBMISSIONS MUST BE BY PERSONAL DELIVERY OR BY MAIL. No electronic submissions will be accepted.

REQUIRED DOCUMENTS AS PART OF THE BID:

The bid shall be considered incomplete and be disqualified if any of the required BIDDING DOCUMENTS in pages BD 1 to BD 20 of this solicitation are not provided as instructed.

BID SECURITY: Each Bid shall be accompanied by a certified or cashier's check or bid bond in the amount of ten (10) percent of the total Bid price payable to the City of El Centro as a guarantee that the Bidder, if its bid is accepted, will promptly execute the Agreement. A bid shall not be considered unless one of the forms of bid security is enclosed with it.

BIDS TO REMAIN OPEN: The Bidder shall guarantee the total Bid price for a period of one hundred twenty (120) calendar Days from the date of Bid opening.

CONTRACTOR'S LICENSE CLASSIFICATION: In accordance with the provisions of California Law, OWNER has determined that CONTRACTOR shall possess a valid Class A California contractor's license at the time that the Bid is submitted. Failure to possess the specified license shall render the Bid non-responsive and shall act as a bar to award of the Agreement to any Bidder not possessing said license at the time of Bid.

CALIFORNIA WAGE RATE REQUIREMENTS: In accordance with the provisions of California Labor Code sections 1770 *et seq*. as amended, the Director of the Department of Industrial Relations has determined the general prevailing rate of per diem wages in accordance with the standards set forth in such sections for the locality in which the WORK is to be performed. A copy of said wage rates is on file at the office of OWNER. It shall be mandatory for CONTRACTOR to whom the WORK is awarded, and upon any Subcontractor under CONTRACTOR, to pay not less than said specified rates to all workers employed by them in the execution of the WORK.

CONTRACTOR AND SUBCONTRACTOR REGISTRATION WITH DEPARTMENT OF INDUSTRIAL RELATIONS:

Labor Code section 1771.1 provides that a contractor or subcontractor shall not be qualified to bid on, be listed in a bid proposal, subject to the requirements of Public Contract Code section 4104, or engage in the performance of any contract for public work, as that term is defined in Chapter 1, Part 7, Division 2 of the Labor Code, unless currently registered and qualified to perform public work pursuant to Labor Code section 1725.5. Labor Code section 1771.1 also provides that it is not a violation of that section for an unregistered contractor to submit a bid that is authorized by Business and Professions Code section 7029.1 or by Public Contract Code section 10164, provided the contractor is registered to perform public work pursuant to Labor Code section 1725.5 at the time the contract is awarded.

This project is subject to compliance monitoring and enforcement by the Department of Industrial Relations.

RETAINAGE FROM PAYMENTS: CONTRACTOR may elect to receive one hundred (100%) percent of payments due under the Contract Documents from time to time, without retention of any portion of the payment by OWNER, by depositing securities of equivalent value with OWNER in accordance with the provisions of section 22300 of the Public Contract Code. Such securities, if deposited by CONTRACTOR, shall be valued by OWNER, whose decision on valuation of the securities shall be final. Securities eligible for investment under this provision shall be limited to those listed in section 16430 of the Government Code, bank or savings and loan certificates of deposit, interest-bearing demand deposit accounts, standby letters of credit or any other security mutually agreed to by CONTRACTOR and OWNER.

FILING OF BID PROTESTS:

By submitting a Bid, each Bidder hereby agrees and understands that the Bidder must comply with these protest procedures and exhaust all administrative remedies set forth herein prior to the initiation of any type of related legal action. Subject to the requirements of applicable law, this protest procedure can also be used to resolve issues surrounding the City's determination of a Bidder as not responsible. The following terms as used in this Section shall have the following meanings:

"Protest" shall mean a written objection by an interested party or affected party to (i) the requirements or specifications contained in the Notice to Bidders or any portion of documents accompanying that notice; or (ii) a proposed award recommendation.

A. Solicitation Phase Protest.

The purpose of the solicitation is to obtain competitive Bids from Bidders. Any Bidder who has submitted a bid and who believes that a particular specification or requirement is impractical, unduly restrictive, or ambiguous may advise the AGENCY of its concerns by submitting a detailed solicitation protest statement in accordance with the requirements set forth below in this Section A. The Protest does not replace the requirement to report irregularities in the bid documents.

(1) Contents and Requirements

A solicitation protest must be submitted to the contact named in the bid documents by personal delivery or email by close of business at least fifteen (15) calendar days prior to the Bid due date, and must contain all of the following to be considered:

a. The name, address, and telephone number of the protester; and
b. The Project Name and Project Number; and
c. A detailed statement setting forth the grounds for protest, which shall include all the factual and legal documentation in support of the protest in sufficient detail to establish merits of the protest; and
d. The desired resolution of the protest.

If the submitted protest does not comply with the requirements set forth herein, then it will not be considered for evaluation and will be returned to the protestor. Any grounds for protest not raised are waived. The protest may not be amended after filing. The protest is a public document.

(2) Evaluation and Determination

No hearing will be held on the protest. City's Public Works Director, or designee, will review the protest and any supporting material and conduct an investigation of the facts. That City representative may, but need not, require other Bidders to submit statements or arguments regarding the protest and may discuss the protest with the protestor. The Public Works Director or designee shall issue a final written decision regarding any solicitation protest to each Bidder prior to opening of bids. The written decision will cite any actions that will or will not be taken in response to the protest. That decision shall be final, and there shall be no further administrative recourse, including no protest of an award.

B. Protest of Award

(1) Contents and Requirements

Following the opening of the Bids, but before formal award of the bid, any Bidder may protest City's proposed award of the Contract by submitting a written protest to Office of the City Clerk, 1275 W. Main Street, El Centro CA, 92243, attention Public Works Director or designee, no later than close of business on the fifth business day after the opening of the bids. That protest must be submitted in a timely manner, signed by the protesting Bidder, and must contain all of the following to be considered:

a. The name, address, and telephone number of the protestor; and
b. The Project Name and Project Number; and
c. The City action or recommendation that is being protested;
d. A detailed statement setting forth every ground, reason, legal authority and facts in support of the protest, including all documents and evidence including specific references to parts of the bid documents; and

e. A clear statement of the relief requested.

The party filing the protest must concurrently transmit a copy of the initial protest document and any attached documentation to all other bidding parties.

A protest that does not comply with the requirements set forth herein will be returned to the protestor. The protest shall not be amended after filing. Any grounds for protest not raised are waived. The protest is a public document.

(2) Evaluation and Determination

The protested bidder may file responsive statements to the protest within three (3) business days after the receipt of the protest. Any other responding Bidder shall transmit its response to the protesting Bidder concurrent with delivery to the City. The Public Works Director, or designee, shall review the facts and all submittals relative to the protest and shall issue a written decision setting forth the basis for such decision. The written decision will be issued to the protestor and to all affected parties. Unless otherwise required by law, no hearing shall be provided. In the event a hearing is conducted, the Public Works Director or designee, shall issue written notice to the protestor and affected parties identifying the date and time for the hearing, along with rules concerning the hearing.

C. Delay in Award

Award of any proposed contract maybe delayed pending the resolution of the protest unless one or more of the following conditions is present:

1. The items or services being procured are urgently required;
2. Delivery or performance will be unduly delayed by failure to make award promptly; or
3. Failure to make prompt award will otherwise cause undue harm to the City.

D. No Limitations on Remedies

Nothing contained herein shall be construed to act as a limitation of the City's choice of remedies or confer any right upon any interested party or affected party to a remedy.

E. Basis for Choice Remedy

In determining the appropriate remedy, the City shall consider all of the circumstances surrounding the notice of bids and/or award, including, but not limited to:

1. The seriousness of any deficiency found to exist in the contracting process;
2. The effect of the action on the competitive process;
3. Any urgency surrounding the requirement to enter into a contract; and
4. The effect that implementing the remedy will have on the City.

F. Remedies

If the City determines that the proposed award was not made in accordance with applicable statues, regulations, policies and/or procedures, the City, in its sole discretion, may grant any of the following remedies or any other remedy it deems appropriate:

1. Prior to award, City may do the following
   (a) reject all bids and determine not to proceed with the project at that time;
   (b) reject all bids and issue a new solicitation;
   (c) make a new selection/award recommendation to the next lowest qualified bidder; or
   (d) award the contract consistent with applicable statutes, regulations, policies and procedures;
2. In its sole discretion, take no further action; or
3. Take any other action that is permitted by law to promote compliance.

OWNER'S RIGHTS RESERVED: OWNER reserves the right to reject any or all Bids, to waive any informality in a Bid, and to make awards to the lowest responsive Bidder as it may best serve the interest of OWNER.

LIQUIDATED DAMAGES: The project carries liquidated damages provisions of $1,000 per day per the Contract Documents.

OWNER'S RIGHTS RESERVED: OWNER reserves the right to reject any or all Bids, to waive any and all bid proposals and to waive any technical irregularities, to accept any bid or portion thereof, and to take all bids under advisement for a period of 120 days, and to make awards to the lowest responsive Bidder as it may best serve the interest of OWNER. All bids are provided at the sole expense of the Bidder.

Date:_____ OWNER: City of El Centro

_____
Norma Wyles, City Clerk

- END OF NOTICE INVITING BIDS -

BIDDING DOCUMENTS

INSTRUCTIONS TO BIDDERS

1. DEFINED TERMS. Terms used in these Instructions to Bidders and the Notice Inviting Bids which are defined in the General Conditions have the meanings assigned to them in the General Conditions. The term "Bidder" means one who submits a Bid directly to OWNER, as distinct from a sub-bidder, who submits a Bid to a Bidder.

2. INTERPRETATIONS AND ADDENDA

2.1 All questions about the meaning or intent of the Contract Documents are to be directed to OWNER. Interpretations or clarifications considered necessary by OWNER in response to such questions will be issued by Addenda. Questions received less than Ten (10) Days prior to the date for opening of Bids may not be answered. Only questions answered by formal written Addenda will be binding. Oral and other interpretations or clarifications will be without legal effect.

2.2 Addenda may also be issued to modify the Contract Documents as deemed advisable by OWNER.

3. COMPETENCY OF BIDDERS. In selecting the lowest responsive Bidder, consideration will be given not only to the financial standing but also to the general competency of the Bidder for the performance of the WORK covered by the Bid. Bidders must possess a valid California contractor's license applicable to the type of work bid upon at the time of opening Bids.

4. EL CENTRO BUSINESS LICENSE. All Bidders and their Subcontractors not already having a business license from the City of El Centro for the WORK will be required to secure the appropriate license from the City of El Centro before the Agreement can be executed.

5. DISQUALIFICATION OF BIDDERS. More than one (1) Bid from an individual, firm, partnership, corporation or association under the same or different names will not be considered. If OWNER believes that any Bidder is interested in more than one (1) Bid for the WORK contemplated, all Bids in which such Bidder is interested will be rejected. If OWNER believes that collusion exists among the Bidders, all Bids will be rejected. A party who has quoted prices to a Bidder is not hereby disqualified from quoting prices to other Bidders, or from submitting a Bid directly for the WORK.

6. BIDDER'S EXAMINATION OF CONTRACT DOCUMENTS AND SITE

6.1 It is the responsibility of each Bidder before submitting a Bid:

(a) To examine thoroughly the Contract Documents and other related data identified in the Bidding Documents (including "technical data" referred to below);

(b) To visit the site to become familiar with and satisfy Bidder as to the general and local conditions that may affect cost, progress or performance of the WORK;

(c) To consider Federal, State and local Laws and Regulations that may affect cost, progress or performance of the WORK;

(d) To study and carefully correlate the Bidder's knowledge and observations with the Contract Documents and other related data; and

(e) To notify OWNER of all conflicts, errors, ambiguities or discrepancies in or between the Contract Documents and such other related data.

6.2 Reference is made to the Supplementary General Conditions for identification of:

(a) Those reports of explorations and tests of subsurface conditions at or contiguous to the site which have been utilized by OWNER in the preparation of the Contract Documents. The Bidder may rely upon the accuracy of the technical data contained in such reports; however, the interpretation of such technical data, including any interpolation or extrapolation thereof, together with non-technical data, interpretations and opinions contained therein or the completeness thereof is the responsibility of the Bidder.

(b) Those drawings of physical conditions in or relating to existing surface and subsurface conditions (except Underground Utilities) which are at or contiguous to the site that have been utilized by OWNER in the preparation of the Contract Documents. The Bidder may rely upon the accuracy of the technical data contained in such drawings; however, the interpretation of such technical data, including any interpolation or extrapolation thereof, together with nontechnical data, interpretations and opinions contained in such drawings or the completeness thereof is the responsibility of the Bidder. Subsurface conditions, including but not limited to groundwater, may have changed significantly between the completion of the soils investigation by the geotechnical engineer and start of construction. Subsurface conditions, including but not limited to groundwater, may change significantly during construction.

6.3 Copies of such reports and drawings will be made available by OWNER to any Bidder on request if said reports and drawings are not bound herein. Those reports and drawings are not part of the Contract Documents, but the technical data contained therein upon which the Bidder is entitled to rely, in Paragraph SGC-4.2 of the Supplementary General Conditions has been identified and established.

6.4 Information and data reflected in the Contract Documents with respect to Underground Utilities at or contiguous to the site is based upon information and data furnished to OWNER by the owners of such Underground Utilities or others, and OWNER does not assume responsibility for the accuracy or completeness thereof unless it is expressly provided otherwise in the Supplementary General Conditions or the section entitled "Protection and Restoration of Existing Facilities" of the General Requirements.

6.5 Provisions concerning responsibilities for the adequacy of data furnished to prospective Bidders on subsurface conditions, Underground Utilities and other physical conditions, and possible changes in the Contract Documents due to differing conditions appear in Paragraphs 4.2, 4.3, and 4.4 of the General Conditions.

6.6 Before submitting a Bid, each Bidder will, at Bidder's own expense, make or obtain any additional examinations, investigations, explorations, tests and studies and obtain any additional information and data which pertain to the physical conditions (surface, subsurface and Underground Utilities) at or contiguous to the site or otherwise which may affect cost, progress or performance of the WORK or which relate to any aspect of the means, methods, techniques, sequences or procedures of construction to be employed by Bidder and Safety precautions and programs incident thereto which the Bidder deems necessary to determine its Bid for performing the WORK in accordance with the time, price and other terms and conditions of the Contract Documents. Interference with existing facility operations will not be permitted.

6.7 On request in advance, OWNER will provide each Bidder access to the site to conduct such examinations, investigations, explorations, tests and studies as each Bidder deems necessary for submission of a Bid. Bidder shall fill all holes and shall clean up and restore the site to its former condition upon completion of such examinations, investigations, explorations, tests and studies.

6.8 The lands upon which the WORK is to be performed, rights-of-way and easements for access thereto and other lands designated for use by CONTRACTOR in performing the WORK are identified in the Contract Documents. All additional lands and access thereto required for temporary construction facilities or storage of materials and equipment are to be provided by CONTRACTOR. Easements for permanent structures or permanent changes in existing structures are to be obtained and paid for by OWNER unless otherwise provided in the Contract Documents.

6.9 The submission of a Bid will constitute an incontrovertible representation by the Bidder that the Bidder has complied with every requirement of this Paragraph 6, "Bidder's Examination of Contract Documents and Site" herein, that without exception the Bid is premised upon performing the WORK required by the Contract Documents and such means, methods, techniques, sequences or procedures of construction (if any) as may be indicated in or required by the Contract Documents, that Bidder has given OWNER written notice of all conflicts, errors, ambiguities and discrepancies in the Contract Documents and the written resolution thereof by OWNER is acceptable to Bidder and the Contract Documents are sufficient in scope and detail to indicate and convey understanding of all terms and conditions for performance of the WORK.

7. BID FORM.

7.1 The Bid shall be made on the Bid schedule bound herein and the pages may be removed from the bound volume. The envelope enclosing the sealed Bids shall be plainly marked in the upper left-hand corner with the name and address of the Bidder and shall bear the words "BID FOR" followed by "COMMERCIAL AVE. IMPROVEMENTS PROJECT," El Centro, CA, 92243, and the date and hour of opening of Bids. The Bid security shall be enclosed in the same envelope with the Bid.

7.2 All blanks on the Bid form must be completed in ink.

7.3 Bids by corporations must be executed in the corporate name by the president and a vice-president. Bids signed by other corporate officer or the project manager shall be accompanied by the enclosed certificate of authority to sign, attested by the secretary or assistant secretary, and with the corporate seal affixed. The corporate address and state of incorporation must appear below the signature.

7.4 Bids by partnerships must be executed in the partnership name and be signed by a managing partner, accompanied by evidence of authority to sign and his/her title must appear under the signature and the official address of the partnership must appear below the signature.

7.5 All names must be printed below the signature.

7.6 The Bid shall contain an acknowledgement of receipt of all Addenda, the numbers of which shall be filled in on the Bid form. Failure to acknowledge Addenda shall render the Bid non-responsive and shall be cause for its rejection.

7.7 The address to which communications regarding the Bid are to be directed must be shown.

7.8 All Bidders must provide evidence of authority to conduct business in California to the extent required by law.

8. QUANTITIES OF WORK. The quantities of work or material stated in unit price items of the Schedule of Values are supplied only to give an indication of the general scope of the WORK; OWNER does not expressly or by implication agree that the actual amount of work or material will correspond therewith, and reserves the right after award to increase or decrease the amount of any unit price item of the WORK in accordance with Article 10 of the General Conditions, to delete any Bid item in its entirety, or to add additional Bid items up to and including an aggregate total amount not to exceed twenty-five (25) percent of the Contract Price.

9. SUBSTITUTE OR "OR EQUAL" ITEMS. Whenever materials or equipment are specified or described in the Contract Documents by using the name of a proprietary item or the name of a particular supplier and the name is followed by the words "or equal," the Bidder may write the name of a substitute supplier (which the Bidder considers as an "or equal") in the Proposed Substitute Equipment/Material Supplier List in the Bid form. These substitute suppliers will only be considered after award of the Agreement. The procedure for the submittal of substitute or "or equal" products is specified in section 6.7 of the General Conditions.

10. SUBMISSION OF BIDS. The Bid shall be delivered by the time and to the place set forth in the Notice Inviting Bids. It is the Bidder's sole responsibility to see that its Bid is received in proper time.

11. BID SECURITY, BONDS AND INSURANCE. Each Bid shall be accompanied by a certified or cashiers' check or approved Bid bond in the amount stated in the Notice Inviting Bids. Said check or bond shall be made payable to the City of El Centro and shall be given as a guarantee that the Bidder, if awarded the Agreement, will enter into an Agreement with OWNER, and will furnish the necessary insurance certificates, payment bond and performance bond; each of said Bonds to be in the amount stated in the Supplementary General Conditions. In case of refusal or failure to enter into said Agreement, the check or Bid bond, as the case may be, shall be forfeited to OWNER. If the Bidder elects to furnish a Bid bond as its Bid security, the Bidder shall use the Bid bond form bound herein, or one conforming substantially to it in form.

12. DISCREPANCIES IN BIDS. In the event of a discrepancy between words and numbers in the Bid, the words shall govern. In the event there are unit price Bid items in the Schedule of Values and the amount indicated for a unit price Bid item does not equal the product of the unit price and quantity, the unit price shall govern and the amount will be corrected accordingly, and the Bidder shall be bound by said correction. In the event there is more than one (1) Bid item in the Schedule of Values and the total indicated for the schedule does not agree with the sum of the prices bid on the individual items, the prices bid on the individual items shall govern and the total for the schedule will be corrected accordingly, and the Bidder shall be bound by said correction.

13. **MODIFICATIONS AND UNAUTHORIZED ALTERNATIVE BIDS.** Unauthorized conditions, limitations or provisos attached to the Bid will render it informal and may cause its rejection as being non-responsive. The completed Bid forms shall be without interlineations, alterations or erasures in the printed text. Alternative Bids will not be considered unless called for. Oral, telegraphic or telephonic Bids or modifications will not be considered.

14. **WITHDRAWAL OF BID.** The Bid may be withdrawn by the Bidder by means of a written request, signed by the Bidder or its properly authorized representative. Such written request must be delivered to the place stipulated in the Notice Inviting Bids for receipt of Bids prior to the scheduled closing time for receipt of Bids.

15. **BID RESULTS.** To obtain bid results, provide a self-addressed, stamped envelope, referencing "COMMERCIAL AVE. IMPROVEMENTS PROJECT." Bid tabulation will be mailed to you after verification of extensions. Bid results will not be given out over the telephone. Bid results may be posted on City's website.

16. **AWARD OF CONTRACT.** Award of a contract, if it be awarded, will be on the basis of the Bid proposal estimated quantities and will be made to the lowest responsive Bidder whose Bid complies with all the requirements prescribed. Unless otherwise specified, any such award will be made within the period stated in the Notice Inviting Bids that the Bids are to remain open. Unless otherwise indicated, a single award will be made for all the Bid items in an individual Bid schedule. The lowest Bid shall be the lowest price on the Total BID.

17. **RETURN OF BID SECURITY.** Within fourteen (14) Days after award of the Agreement, OWNER will return the Bid securities accompanying such of the Bids as are not considered in making the award. All other Bid securities will be held until the Agreement has been finally executed. They will then be returned to the respective Bidders whose Bids they accompany.

18. **EXECUTION OF AGREEMENT.** The apparent low Bidder will be required to execute a written Agreement with OWNER on the form of agreement provided, shall secure all insurance and shall furnish all certificates and Bonds required by the Contract Documents within fourteen (14) calendar Days after receipt of notification that the Bidder is the apparent low Bidder. Failure or refusal to enter into an Agreement as herein provided or to conform to any of the stipulated requirements in connection therewith shall be considered non-responsive and result in the forfeiture of the Bid security. If the lowest responsive Bidder refuses or fails to execute the Agreement, OWNER may proceed to the second lowest responsive Bidder. If the second lowest responsive Bidder refuses or fails to execute the Agreement, OWNER may proceed to the third lowest responsive Bidder. On the failure or refusal of such second or third lowest Bidder to execute the Agreement, each such Bidder's Bid securities shall be likewise forfeited to OWNER.

19. LIQUIDATED DAMAGES. Provisions for liquidated damages in the amount of $1,000 per day are set forth in the Agreement Section XVIII.

20. WORKERS' COMPENSATION REQUIREMENT. The Bidder should be aware that in accordance with section 3700 of the California Labor Code it will, if awarded the Agreement, be required to secure the payment of compensation to its employees and execute the Workers' Compensation Certification in the form contained in these Contract Documents.

- END OF INSTRUCTIONS TO BIDDERS -

SECTION 00300A

BID FORMS

BID TO: CITY OF EL CENTRO

1. The undersigned Bidder proposes and agrees, if this Bid is accepted, to enter into an Agreement with OWNER in the form included in the Contract Documents (as defined in Article 6 of the Agreement) to perform the WORK as specified or indicated in said Contract Documents entitled "WASTEWATER TREATMENT PLANT UV DISINFECTION IMPROVEMENTS"

2. Bidder accepts all of the terms and conditions of the Contract Documents, including without limitation those in the Notice Inviting Bids and Instructions to Bidders, dealing with the disposition of the Bid security.

3. This Bid will remain open for the period stated in the Notice Inviting Bids unless otherwise required by law. Bidder will enter into an Agreement within the time and in the manner required in the "Notice Inviting Bids" and the "Instructions to Bidders," and will furnish the insurance certificates, Payment Bond and Performance Bond required by the Contract Documents.

4. Bidder has examined copies of all the Contract Documents including the following Addenda (receipt of all of which is hereby acknowledged):

Number _____ _____ _____ _____ _____ _____

Date _____ _____ _____ _____ _____ _____

5. Bidder has familiarized itself with the nature and extent of the Contract Documents, WORK, site, locality where WORK is to be performed, the legal requirements (Federal, State and local laws, ordinances, rules and regulations) and the conditions affecting cost, progress or performance of the WORK and has made such independent investigations as Bidder deems necessary.

To all the foregoing, and including all Bid schedule(s) and information required of Bidder contained in this Bid form, said Bidder further agrees to complete the WORK required under the Contract Documents within the Contract Time set forth in said Contract Documents, and to accept in full payment therefore the Contract Price based on the total Bid price(s) named in the aforementioned Bid schedule(s).

Dated: _____ Bidder: _____

By: _____
(Signature)

Title: _____

BID SCHEDULE - PRICES

Pursuant to and in compliance with the Invitation for Bids and other Contract Documents relating to the proposal for the construction of

WASTEWATER TREATMENT PLANT UV DISINFECTION IMPROVEMENTS

all in accordance with the Drawings and Project Specifications the undersigned Bidder, having familiarized himself with the terms of the Agreement, the local conditions affecting the performance of the Agreement and the cost of the WORK at the place the WORK is to be done; and with the Drawings, Project Specifications and other Contract Documents, hereby stipulated; CONTRACTOR agrees to complete the Agreement, including all of its component parts and everything required to be performed, and to provide and furnish any and all labor, materials, equipment, tools, expendable supplies, and all utility and transportation services necessary to perform the Agreement, and complete in a workmanlike manner all of the WORK required in connection with the Agreement, all in strict conformance with the Drawings and Specifications for the following prices and sum.

The following Bid Schedule of estimated quantities is included for convenience of bidding and a basis for comparison of Bids only, and CITY does not, expressly, or by implication, agree that the actual amount of work will correspond therewith, but reserves the right to increase or decrease the amount of any class or portion of the WORK, or to delete portions of the WORK, as may be deemed necessary or advisable by CITY.

All Bidders are REQUIRED to use unit prices where indicated and to complete this schedule.

All items shall be complete and in place per Plans and these Bid and Contract Documents.

Note: Payment for all work (labor, material, equipment, etc.) required for the construction and installation of the improvement as shown on the plans which is not specifically identified below in the Bid Schedule shall be considered as included in the CONTRACTOR's price, as itemized below, for the various items of work for which the work is required, and no additional compensation shall be made therefor.

PROPOSAL BID FORM

TO THE DIRECTOR OF PUBLIC WORKS OF THE CITY OF EL CENTRO:

The undersigned hereby declares that he has carefully examined the location of the proposed work, that he has examined the plans and specifications and read the accompanying instructions to bidders and hereby proposes to furnish all material except owner furnished materials, and do all work required to complete the said work in accordance with said plans and specifications and special provisions for the unit prices set forth in the following schedule. The bidder shall furnish prices for all items shown in the proposal.

BASE BID SCHEDULE

Item	Description	Unit	Amount	Unit Price	Total Price
1	MOBILIZATION / DEMOBILIZATION / REQUIRED PERMITS	LS	1		
2	SHEETING, SHORING, AND BRACING	LS	1		
3	TEMPORARY BMPs	LS	1		
4	DEMOLITION	LS	1		
5	EARTHWORK AND GRADING	LS	1		
6	CONSTRUCT CONCRETE SLABS	LS	1		
7	CONSTRUCT MISCELLANEOUS CONCRETE	LS	1		
8	FURNISH AND INSTALL PRECAST CONCRETE TRENCHES	LS	1		
9	FURNISH AND INSTALL PRE-ENGINEERED BUILDINGS	LS	1		
10	FURNISH AND INSTALL LEVEL CONTROL WEIRS	LS	1		
11	FURNISH AND INSTALL FRP COVERS AND FRP GRATING	LS	1		
12	INSTALL UV DISINFECTION SYSTEM	LS	1		
13	ELECTRICAL AND CONTROLS WORK	LS	1		

Total: $_____

Total Bid is:

$_____ (Amount of Total Base Bid written numerically as dollars and cents, in US dollars)

$ _____
(Amount of Total Base Bid written in words as dollars and cents, in US dollars)

END OF PROPOSAL BID FORM

LIST OF SUBCONTRACTORS

The Bidder shall list below the name and the location of the place of business of each Subcontractor who will perform work or labor or render service to CONTRACTOR in or about the construction of the WORK, or a Subcontractor licensed by the State who, under subcontract to CONTRACTOR, specially fabricates and installs a portion of the WORK according to detailed Drawings contained in the plans and specifications, in an amount in excess of one-half (0.5) of one (1.0) percent of CONTRACTOR's total Bid. The Bidder shall also list below the portion of the WORK which will be done by each Subcontractor under this contract. CONTRACTOR shall list only one (1) Subcontractor for each portion of the WORK. **If Bidder does NOT intend to use ANY subcontractors, state "NONE" in the first block.**

Substitutions of subcontractors listed will not be permitted unless approved by the City of El Centro**.**

The Bidder's attention is directed to Paragraph 6.5.3 entitled "Subcontract Limitations" of the General Conditions which sets forth the percent of the WORK to be performed with the Bidders' own forces. **Failure to comply with this requirement will render the Bid non-responsive and may cause its rejection.**

PORTION OF WORK	NAME OF SUBCONTRACTOR	DIR REGISTRATION NUMBER	PLACE OF BUSINESS ADDRESS/TELEPHONE No.

USE ADDITIONAL FORMS AS NECESSARY

GENERAL INFORMATION

BIDDER'S GENERAL INFORMATION:

The Bidder shall furnish the information requested below. Additional sheets shall be attached as required. Failure to complete Item Nos. 1 through 3 will cause the Bid to be non-responsive and shall cause its rejection. In any event, no award will be made until all of the Bidder's general information (i.e., items 1 through 3, inclusive) is delivered to OWNER.

INFORMATION TO BE PROVIDED BY ALL BIDDERS WITH BID SUBMITTAL: PROVIDE A COMPLETE COPY OF THE MOST CURRENT LICENSE

(1) CONTRACTOR's name and address: _____

_____

_____

(2) CONTRACTOR's telephone number: _____ FAX number: _____

(3) CONTRACTOR's license: Primary classification _____

California State License No. and Expiration Date _____

Supplemental classifications held, if any: _____

Name of Licensee, if different from (1) above: _____

_____

To be considered for award, CONTRACTOR shall have met all requirements established by OWNER of the Project.

- END GENERAL INFORMATION –

NONCOLLUSION DECLARATION
TO BE EXECUTED BY BIDDER AND SUBMITTED WITH BID

The undersigned declares:

I am the _____ of _____, the party making the foregoing bid.

The bid is not made in the interest of, or on behalf of, any undisclosed person, partnership, company, association, organization, or corporation. The bid is genuine and not collusive or sham. The bidder has not directly or indirectly induced or solicited any other bidder to put in a false or sham bid. The bidder has not directly or indirectly colluded, conspired, connived, or agreed with any bidder or anyone else to put in a sham bid, or to refrain from bidding. The bidder has not in any manner, directly or indirectly, sought by agreement, communication, or conference with anyone to fix the bid price of the bidder or any other bidder, or to fix any overhead, profit, or cost element of the bid price, or of that of any other bidder. All statements contained in the bid are true. The bidder has not, directly or indirectly, submitted his or her bid price or any breakdown thereof, or the contents thereof, or divulged information or data relative thereto, to any corporation, partnership, company, association, organization, bid depository, or to any member or agent thereof, to effectuate a collusive or sham bid, and has not paid, and will not pay, any person or entity for such purpose.

Any person executing this declaration on behalf of a bidder that is a corporation, partnership, joint venture, limited liability company, limited liability partnership, or any other entity, hereby represents that he or she has full power to execute, and does execute, this declaration on behalf of the bidder.

I declare under penalty of perjury under the laws of the State of California that the foregoing is true and correct and that this declaration is executed on _____ [date], at _____ [city], _____ [state].

- END NONCOLLUSION DECLARATION –

BID BOND

KNOW ALL MEN BY THESE PRESENTS,

That _____ as Principal, and _____as Surety, are held and firmly bound unto the City of El Centro, hereinafter called "OWNER," in the sum of _____ dollars, (_____) (not less than ten (10) percent of the total amount of the Bid) for the payment of which sum, well and truly to be made, we bind ourselves, our heirs, executors, administrators, successors, and assigns, jointly and severally, firmly by these presents.

WHEREAS, said Principal has submitted a Bid to said OWNER to perform the WORK required under the Bid schedule(s) of OWNER's Contract Documents entitled:

_____

_____

NOW THEREFORE, if said Principal is awarded a contract by said OWNER and, within the time and in the manner required in the Notice Inviting Bids and the Instructions to Bidders enters into a written Agreement on the form of agreement bound with said Contract Documents, furnishes the required certificates of insurance and furnishes the required Performance Bond and Payment Bond, then this obligation shall be null and void, otherwise it shall remain in full force and effect. In the event suit is brought upon this Bond by said OWNER and OWNER prevails, said Surety shall pay all costs incurred by said OWNER in such suit, including reasonable attorneys' fee to be fixed by the court and actual costs.

SIGNED AND SEALED, this _____ day of _____, 20___

_____ (SEAL) _____(SEAL)
(Principal) (Surety)

By: _____ By: _____
(Signature) (Signature)

(SEAL AND NOTARIAL ACKNOWLEDGEMENT OF SURETY)

- END BID BOND –

CORPORATE CERTIFICATION
OR
PARTNERSHIP INFORMATION

Name of Corporation or Partnership_____

State of Incorporation_____

List names and addresses of each partner, or titles, names and business addresses of President, Secretary and Treasurer.

_____

_____

_____

Date_____ Contractor_____

Signature_____ Title_____

ATTEST:

_____
Signature by

_____
Title

END OF CORPORATE CERTIFICATION OR PARTNERSHIP INFORMATION

DRUG/ALCOHOL TESTING REQUIREMENTS

CONTRACTOR shall execute the following form as required by the Federal Drug and Alcohol, Section 49 CFR Part 382.

I agree to comply with the provisions of Federal Omnibus Transportation Employee Testing Act of 1991, and that I will administer a program of alcohol and drug testing of all commercial vehicle operators, as required by Federal Regulations.

CONTRACTOR certifies compliance with the City of El Centro's Drug and Alcohol Free Workplace Policy as a condition of the State Drug-Free Workplace Act of 1990 (Government Code sections 8350 *et seq*.) and the Federal Drug Free Workplace Act of 1988 (41 U.S.C.A. Sections 701 *et seq*.) In addition, CONTRACTOR agrees to submit a copy of its own drug free workplace policy.

Dated_____

_____
CONTRACTOR's Name

_____
CONTRACTOR's Signature

_____
Title

- END DRUG/ALCOHOL TESTING REQUIREMENTS –

WORKERS' COMPENSATION CERTIFICATE

(AS REQUIRED BY SECTION 1861
OF THE CALIFORNIA LABOR CODE)

I am aware of the provisions of section 3700 of the Labor Code which require every employer to be insured against liability for Workers' Compensation or to undertake self-insurance in accordance with the provisions of that code, and I will comply with such provisions before commencing the performance of the WORK of this Agreement.

CONTRACTOR:_____

By: _____

Title: _____

- **END OF WORKERS' COMPENSATION CERTIFICATE –**

SITE VISIT CERTIFICATE

THIS IS TO CERTIFY that:

I, _____(*name of bidder or his representative*) of the _____ (*name of construction firm*) visited the site in connection with the Bid for the _____ (*name of the Project.*)

Having examined the bid documents, I certify that I have acquainted with the nature, geographical and exact location of the works; the general conditions of execution; the neighboring buildings and other constraints that might affect the construction methods; the obligation not to obstruct the traffic where requested, or the flow of any water; the physical conditions specific to the construction sites; the climatic conditions; local conditions; means of communication and transport; the possibility of supplying water, electricity and fuel; the availability of labor sufficient in number and quantity; all constraints and obligations resulting from social, tax and customs legislation; and all conditions and circumstances which might influence the execution or price of the works.

I further certify that I am satisfied with the description of the works and the Project Engineer's explanations and that I understand perfectly the works to be undertaken as specified and implied in the execution of the Contract.

_____
(Name and Signature of Bidder or his Representative)

Date : _____

Note 1: This form shall be completed at the time of the visit to the site where the works are to be carried out.

- END OF SITE VISIT CERTIFICATE –

CONTRACTOR'S CERTIFICATION OF QUALIFICATION FOR LICENSE CLASSIFICATION

After award of the contract, the Contractor, whether an individual, co-partnership, limited partnership, corporation, or any other combination or organization, shall execute the following form:

1. If an individual, I hereby certify that I am, or my responsible managing employee _____ (insert name) is, qualified for the license classification called for in these contract documents.

2. If a co-partnership or limited partnership, the general partner hereby certifies that the general partner _____ (insert name), or responsible managing employee _____ (insert name), is qualified for the license classification called for in these contract documents.

3. If a corporation, or any other combination or organization, the responsible managing officer _____ (insert name), or a responsible managing employee _____ (insert name), is qualified for the license classification called for in these contract documents.

If the individual who qualifies the Contractor for the license classification called for in these contract documents changes during the progress of the work, then Contractor shall, within seven (7) days of any such change, notify the Director of Public Works in writing of such change, including the name, license number and status of the individual.

For the purpose of this Certification, a responsible managing employee shall mean an individual who is a bona fide employee of the Contractor and is actively engaged in the classification of work for which that individual is the qualifying person on behalf of the Contractor under California law.

DATED:_____ CONTRACTOR:_____

SIGNATURE:_____ TITLE:_____

ATTEST:

SIGNATURE BY:_____

TITLE:_____

- END OF BIDDING DOCUMENTS –

CONTRACT DOCUMENTS

CITY OF EL CENTRO
WASTEWATER TREATMENT PLANT UV DISINFECTION IMPROVEMENTS
CONSTRUCTION SERVICES AGREEMENT

This CONSTRUCTION SERVICES AGREEMENT ("Agreement"), is made and effective , by and between the City of El Centro, a municipal corporation ("CITY"), and , a ("CONTRACTOR"). In consideration of the mutual covenants and conditions set forth herein, the parties agree as follows:

I. SCOPE OF WORK

The CONTRACTOR shall perform within the time set forth in Article 2 of this Agreement and shall furnish all labor, materials, equipment, tools, utility services, and transportation and perform and complete all work required in connection with the following:

The work shall include the replacing of two existing UV disinfection units with two new UV disinfection units including minor modifications to the existing UV disinfection channels. Installation of two new pre-engineered mechanical buildings to house equipment. Minor concrete, minor aggregate base, and electrical. The scope of work is more specifically described on the construction plans and in these Specifications.

By entering into this Agreement, CONTRACTOR acknowledges that there may be other contractors on the site whose work will be coordinated with that of its own. CONTRACTOR expressly warrants and agrees that it will cooperate with other contractors and will do nothing to delay, hinder, or interfere with the work of other separate contractors, the CITY, the OWNER, the Architect, or utilities. CONTRACTOR also expressly agrees that, in the event its work is hindered, delayed, interfered with, or otherwise affected by a separate contractor, its sole remedy will be a direct action against the separate contractor. To the extent allowed by law, the CONTRACTOR will have no remedy, and hereby expressly waives any remedy against the CITY, the OWNER, or the Architect on account of delay, hindrance, interference or other events caused by a separate contractor.

II. TIME FOR PROJECT COMPLETION

All of CONTRACTOR's work on the Project shall be completed within durations established for the individual activities as set forth in the Project Construction Schedule. All work shall commence ten (10) calendar days after receiving a written Notice to Proceed from the CITY or OWNER, if a OWNER is employed by CITY on the Project. CONTRACTOR shall refer to the invitations for bids, and Project Plans and Specifications, all of which, as set forth below, are incorporated herein by reference, for contractual obligations regarding individual activity durations. The aggregate sum total work of all individual Prime Contractors to the CITY comprises the entire "Project" and shall be commenced and completed in conformance with the Project Construction Schedule. The entire Project shall be completed within 90 "Calendar" days as defined by Article 1 – Definitions of the General Conditions.

III. THE CONTRACT SUM

The CITY shall pay to the CONTRACTOR for the performance of this Agreement, subject to any additions and deductions provided in the Project documents, the sum of dollars ($).

IV. PROGRESS PAYMENTS

Based upon Applications for Payment submitted to the Architect by the CONTRACTOR and Certificates for Payment issued by the Architect, the CITY shall make progress payments on account of the Contract Sum to the CONTRACTOR as provided in the General Conditions.

This Agreement is subject to the provisions of Article 1.7 (commencing at Section 20104.50) of Division 2, Part 3 of the Public Contract Code regarding prompt payment of contractors by local governments. Article 1.7 mandates certain procedures for the payment of undisputed and properly submitted payment requests within 30 days after receipt, for the review of payment requests, for notice to Contractor of improper payment requests, and provides for the payment of interest on progress payment requests that are not timely made in accordance with that Article. This AGREEMENT hereby incorporates the provisions of Article 1.7 as though fully set forth herein.

V. RETENTION OF SECURITIES

Public Contract Code Section 22300 permits the substitution of securities for any monies withheld by a public agency to ensure performance under a contract, at the request and expense of the CONTRACTOR.

VI. INDEMNITY, DEFENSE AND HOLD HARMLESS AGREEMENT

CONTRACTOR shall indemnify, defend with legal counsel approved by CITY, and hold harmless CITY, its officers, officials, employees and volunteers from and against all liability, loss, damage, expense, cost (including without limitation reasonable legal counsel fees, expert fees and all other costs and fees of litigation) of every nature arising out of or in connection with CONTRACTOR's negligence, recklessness or willful misconduct in the performance of work hereunder or its failure to comply with any of its obligations contained in this Agreement, except such loss or damage which is caused by the sole or active negligence or willful misconduct of the CITY. Should conflict of interest principles preclude a single legal counsel from representing both CITY and CONTRACTOR, or should CITY otherwise find CONTRACTOR's legal counsel unacceptable, then CONTRACTOR shall reimburse the CITY its costs of defense, including without limitation reasonable legal counsels fees, expert fees and all other costs and fees of litigation. The CONTRACTOR shall promptly pay any final judgment rendered against the CITY (and its officers, officials, employees and volunteers) with respect to claims determined by a trier of fact to have been the result of the CONTRACTOR's negligent,

reckless or wrongful performance. It is expressly understood and agreed that the foregoing provisions are intended to be as broad and inclusive as is permitted by the law of the State of California and will survive termination of this Agreement.

CONTRACTOR obligations under this section apply regardless of whether or not such claim, charge, damage, demand, action, proceeding, loss, stop notice, cost, expense, judgment, civil fine or penalty, or liability was caused in part or contributed to by an Indemnitee. However, without affecting the rights of CITY under any provision of this agreement, CONTRACTOR shall not be required to indemnify and hold harmless CITY for liability attributable to the active negligence of CITY, provided such active negligence is determined by agreement between the parties or by the findings of a court of competent jurisdiction. In instances where CITY is shown to have been actively negligent and where CITY active negligence accounts for only a percentage of the liability involved, the obligation of CONTRACTOR will be for that entire portion or percentage of liability not attributable to the active negligence of CITY.

VII. PREVAILING WAGES

A. Wage rates for this Project shall be in accordance with the "General Wage Determination Made by the Director of Industrial Relations Pursuant To California Labor Code, Part 7, Chapter 1, Article 2, Sections 1770, 1771, 1773, 1773.1, 1774 and 1815", for Imperial County. Wage rates shall conform to those posted at www.cityofelcentro.org under the RFP and Bids City website section for this project and the Project site.

B. The following Labor Code sections are hereby referenced and made a part of this Agreement:

1. Section 1775 - Penalty for Failure to Comply with Prevailing Wage Rates.
2. Section 1777.4 - Apprenticeship Requirements.
3. Section 1777.5 - Apprenticeship Requirements.
4. Section 1813 - Penalty for Failure to Pay Overtime.
5. Sections 1810 and 1811 - Working Hour Restrictions.
6. Section 1775 - Payroll Records.
7. Section 1773.8 - Travel and Subsistence Pay.
8. Section 1776 – Payroll Records

VIII. RECORD AUDIT

In accordance with Government Code Section 8546.7, records of both the CITY and the CONTRACTOR shall be subject to examination and audit by the Auditor General for a period of three (3) years after final payment.

IX. CERTIFICATIONS

A. Contractor shall have a Class A License.

X. FINAL PAYMENT

Final payment, constituting the entire unpaid balance of the Agreement Sum, shall be paid by the CITY to the CONTRACTOR no sooner than thirty-five (35) days after a Notice of Completion has been recorded, unless otherwise stipulated in the Notice of Completion, provided the work has then been completed, the Agreement fully performed, and a final Certificate for Payment has been issued by the Architect.

XI. CONTRACTOR'S FAILURE TO PROCURE COMPLETION OF PROJECT

In the event CONTRACTOR fails to furnish tools, equipment, or labor in the necessary quantity or quality, or fails to prosecute the work or any part thereof contemplated by this Agreement in a diligent and workmanlike manner, and if the CONTRACTOR for a period of three (3) calendar days after receipt of written demand from CITY or its designated representative to do so, fails to furnish tools, equipment, or labor in the necessary quantity or quality, and to prosecute its work and all parts thereof in a diligent and workmanlike manner, or after commencing to do so within said three (3) calendar days, fails to continue to do so; then the CITY may exclude the CONTRACTOR from the premises, or any portion thereof, and take possession of said premises or any portion thereof, together with all material and equipment thereon, and may complete the work contemplated by this Agreement or any portion of said work, either by furnishing the tools, equipment, labor or material necessary, or by letting the unfinished portion of said work, or the portion taken over by the CITY to another contractor or by a combination of such methods. In any event, the procuring of the completion of said work, or the portion thereof taken over by the CITY, shall be a charge against the CONTRACTOR, and may be deducted from any money due or becoming due to CONTRACTOR from the CITY, or the CONTRACTOR shall pay the CITY the amount of said charge, or the portion thereof unsatisfied. The sureties provided for under this Agreement shall become liable for payment should CONTRACTOR fail to pay in full any said cost incurred by the CITY.

XII. INSURANCE

Prior to the beginning of and throughout the duration of the Work, CONTRACTOR and its subcontractors shall maintain insurance in conformance with the requirements set forth below. CONTRACTOR will use existing coverage to comply with these requirements. If that existing coverage does not meet the requirements set forth herein, CONTRACTOR agrees to amend, supplement or endorse the existing coverage to do so.

CONTRACTOR acknowledges that the insurance coverage and policy limits set forth in this section constitute the minimum amount of coverage required. Any insurance proceeds available to CONTRACTOR or its subcontractors in excess of the limits and coverage identified in this Agreement and which is applicable to a given loss, claim or demand, will be equally available to CITY.

A. CONTRACTOR shall provide the following types and amounts of insurance:

Without limiting CONTRACTOR's indemnification of CITY, and prior to commencement of Work, CONTRACTOR shall obtain, provide and maintain at its own expense during the term of this Agreement, policies of insurance of the type and amounts described below and in a form satisfactory to CITY.

General liability insurance. CONTRACTOR shall maintain commercial general liability insurance with coverage at least as broad as Insurance Services Office form CG 00 01, in an amount not less than $2,000,000 per occurrence, $4,000,000 general aggregate, for bodily injury, personal injury, and property damage, and a $2,000,000 completed operations aggregate. The policy must include contractual liability that has not been amended. Any endorsement restricting standard ISO "insured contract" language will not be accepted.

Automobile liability insurance. CONTRACTOR shall maintain automobile insurance at least as broad as Insurance Services Office form CA 00 01 covering bodily injury and property damage for all activities of the CONTRACTOR arising out of or in connection with Work to be performed under this Agreement, including coverage for any owned, hired, non-owned or rented vehicles, in an amount not less than $1,000,000 combined single limit for each accident.

Umbrella or excess liability insurance. CONTRACTOR shall obtain and maintain an umbrella or excess liability insurance that will provide bodily injury, personal injury and property damage liability coverage at least as broad as the primary coverages set forth above, including commercial general liability and employer's liability. Such policy or policies shall include the following terms and conditions:

- A drop down feature requiring the policy to respond in the event that any primary insurance that would otherwise have applied proves to be uncollectable in whole or in part for any reason;
- Pay on behalf of wording as opposed to reimbursement;
- Concurrency of effective dates with primary policies;
- Policies shall "follow form" to the underlying primary policies; and
- Insureds under primary policies shall also be insureds under the umbrella or excess policies.

Workers' compensation insurance. CONTRACTOR shall maintain Workers' Compensation Insurance (Statutory Limits) and Employer's Liability Insurance (with limits of at least $1,000,000) for CONTRACTOR's employees in accordance with the laws of the State of California, Section 3700 of the Labor Code. In addition, CONTRACTOR shall require each subcontractor to similarly maintain Workers' Compensation Insurance and Employer's Liability Insurance in accordance with the laws of the State of California, Section 3700 for all of the subcontractor's employees.

CONTRACTOR shall submit to CITY, along with the certificate of insurance, a Waiver of Subrogation endorsement in favor of CITY, its officers, agents, employees and volunteers.

Pollution liability insurance. Environmental Impairment Liability Insurance shall be written on a CONTRACTOR's Pollution Liability form or other form acceptable to CITY providing coverage for liability arising out of sudden, accidental and gradual pollution and remediation. The policy limit shall be no less than $1,000,000 dollars per claim and in the aggregate. All activities contemplated in this Agreement shall be specifically scheduled on the policy as "covered operations." The policy shall provide coverage for the hauling of waste from the project site to the final disposal location, including non-owned disposal sites.

Products/completed operations coverage shall extend a minimum of three (3) years after project completion. Coverage shall be included on behalf of the insured for covered claims arising out of the actions of independent contractors. If the insured is using subcontractors, the Policy must include work performed "by or on behalf" of the insured. Policy shall contain no language that would invalidate or remove the insurer's duty to defend or indemnify for claims or suits expressly excluded from coverage. Policy shall specifically provide for a duty to defend on the part of the insurer. The CITY, its officials, officers, agents, and employees, shall be included as insureds under the policy.

Other provisions or requirements

Proof of insurance. CONTRACTOR shall provide certificates of insurance to CITY as evidence of the insurance coverage required herein, along with a waiver of subrogation endorsement for workers' compensation. Insurance certificates and endorsements must be approved by CITY's risk manager prior to commencement of performance. Current certification of insurance shall be kept on file with CITY at all times during the term of this contract. CITY reserves the right to require complete, certified copies of all required insurance policies, at any time.

Duration of coverage. CONTRACTOR shall procure and maintain for the duration of the contract insurance against claims for injuries to persons or damages to property, which may arise from or in connection with the performance of the Work hereunder by CONTRACTOR, his agents, representatives, employees or subcontractors. CONTRACTOR must maintain general liability and umbrella or excess liability insurance for as long as there is a statutory exposure to completed operations claims. CITY and its officers, officials, employees, and agents shall continue as additional insureds under such policies.

Primary/noncontributing. Coverage provided by CONTRACTOR shall be primary and any insurance or self-insurance procured or maintained by CITY shall not be required to contribute with it. The limits of insurance required herein may be satisfied by a combination of primary and umbrella or excess insurance. Any umbrella or excess insurance shall contain or be endorsed to contain a provision that such coverage shall also apply on a primary and non-contributory basis for the benefit of CITY before the CITY's own insurance or self-insurance shall be called upon to protect it as a named insured.

City's rights of enforcement. In the event any policy of insurance required under this Agreement does not comply with these requirements or is canceled and not replaced, CITY has the right but not the duty to obtain the insurance it deems necessary and any premium paid by CITY will be promptly reimbursed by CONTRACTOR or CITY will withhold amounts sufficient to pay premium from CONTRACTOR payments. In the alternative, CITY may cancel this Agreement.

Acceptable insurers. All insurance policies shall be issued by an insurance company currently authorized by the Insurance Commissioner to transact business of insurance or is on the List of Approved Surplus Line Insurers in the State of California, with an assigned policyholders' Rating of A- (or higher) and Financial Size Category Class VII (or larger) in accordance with the latest edition of Best's Key Rating Guide, unless otherwise approved by the CITY's risk manager.

Waiver of subrogation. All insurance coverage maintained or procured pursuant to this agreement shall be endorsed to waive subrogation against CITY, its elected or appointed officers, agents, officials, employees and volunteers or shall specifically allow CONTRACTOR or others providing insurance evidence in compliance with these specifications to waive their right of recovery prior to a loss. CONTRACTOR hereby waives its own right of recovery against CITY, and shall require similar written express waivers and insurance clauses from each of its sub consultants.

Enforcement of contract provisions (non estoppel). CONTRACTOR acknowledges and agrees that any actual or alleged failure on the part of the CITY to inform CONTRACTOR of non-compliance with any requirement imposes no additional obligations on the CITY nor does it waive any rights hereunder.

Requirements not limiting. Requirements of specific coverage features or limits contained in this Section are not intended as a limitation on coverage, limits or other requirements, or a waiver of any coverage normally provided by any insurance. Specific reference to a given coverage feature is for purposes of clarification only as it pertains to a given issue and is not intended by any party or insured to be all inclusive, or to the exclusion of other coverage, or a waiver of any type. If the CONTRACTOR maintains higher limits than the minimums shown above, the CITY requires and shall be entitled to coverage for the higher limits maintained by the CONTRACTOR. Any available insurance proceeds in excess of the specified minimum limits of insurance and coverage shall be available to the CITY.

Notice of cancellation. CONTRACTOR agrees to oblige its insurance agent or broker and insurers to provide to CITY with a thirty (30) day notice of cancellation (except for nonpayment for which a ten (10) day notice is required) or nonrenewal of coverage for each required coverage.

Additional insured status. General liability policies shall provide or be endorsed to provide that CITY and its officers, officials, employees, agents, and volunteers shall be

additional insureds under such policies. This provision shall also apply to any excess/umbrella liability policies.

Prohibition of undisclosed coverage limitations. None of the coverages required herein will be in compliance with these requirements if they include any limiting endorsement of any kind that has not been first submitted to CITY and approved of in writing.

Separation of insureds. A severability of interests provision must apply for all additional insureds ensuring that CONTRACTOR's insurance shall apply separately to each insured against who claim is made or suit is brought, except with respect to the insurer's limits of liability. The policy(ies) shall not contain any cross-liability exclusions.

Pass through clause. CONTRACTOR agrees to ensure that its sub-consultants, subcontractors, and any other party involved with the project that is brought onto or involved in the project by CONTRACTOR, provide the same minimum insurance coverage and endorsements required of CONTRACTOR. CONTRACTOR agrees to monitor and review all such coverage and assumes all responsibility for ensuring that such coverage is provided in conformity with the requirements of this section. CONTRACTOR agrees that upon request, all agreements with consultants, subcontractors, and others engaged in the project will be submitted to CITY for review.

City's right to revise requirements. The CITY reserves the right at any time during the term of the contract to change the amounts and types of insurance required by giving the CONTRACTOR a ninety (90) day advance written notice of such change. If such change results in substantial additional cost to the CONTRACTOR, the CITY and CONTRACTOR may renegotiate CONTRACTOR's compensation.

Self-insured retentions. Any self-insured retentions must be declared to and approved by CITY. CITY reserves the right to require that self-insured retentions be eliminated, lowered, or replaced by a deductible. Self-insurance will not be considered to comply with these specifications unless approved by CITY.

Timely notice of claims. CONTRACTOR shall give CITY prompt and timely notice of claims made or suits instituted that arise out of or result from CONTRACTOR's performance under this Agreement, and that involve or may involve coverage under any of the required liability policies.

Additional insurance. CONTRACTOR shall also procure and maintain, at its own cost and expense, any additional kinds of insurance, which in its own judgment may be necessary for its proper protection and prosecution of the Work.

XIII. CONTRACTOR'S LICENSE

CONTRACTOR must possess at the time of commencing work and throughout the Project duration, a Contractor's License, issued by the State of California, which is current and in good standing. CONTRACTOR shall ensure that any subcontractor working on the Project

possesses at the time of commencing work and throughout the Project duration, a Contractor's License, issued by the State of California, which is current and in good standing.

XIV. REGISTRATION REQUIREMENTS

Pursuant to Section 1771.1(a) of the Labor Code:

"A contractor or subcontractor shall not be qualified to bid on, be listed in a bid proposal, subject to the requirements of Section 4104 of the Public Contract Code, or engage in the performance of any contract for public work, as defined in this chapter, unless currently registered and qualified to perform public work pursuant to Section 1725.5. It is not a violation of this section for an unregistered contractor to submit a bid that is authorized by Section 7029.1 of the Business and Professions Code or by Section 10164 or 20103.5 of the Public Contract Code, provided the contractor is registered to perform public work pursuant to Section 1725.5 at the time the contract is awarded."

CONTRACTOR must be registered with the Department of Industrial Relations (DIR) of the State of California in order to be eligible to work on public works projects. CONTRACTOR must ensure registration with the DIR that is active and in good standing.

No contractor or subcontractor may be listed on a bid proposal for a public works project (submitted on or after March 1, 2015) unless registered with the Department of Industrial Relations pursuant to Labor Code section 1725.5 [with limited exceptions from this requirement for bid purposes only under Labor Code section 1771.1(a)].

No contractor or subcontractor may be awarded a contract for public work on a public works project (awarded on or after April 1, 2015) unless registered with the Department of Industrial Relations pursuant to Labor Code section 1725.5.

This project is subject to compliance monitoring and enforcement by the Department of Industrial Relations.

The CONTRACTOR is not subject to public works requirements (including registration with the DIR) if the public works project is under $1,000, unless the CITY knows that the same CONTRACTOR will be awarded total project costs in excess of $1,000 for a given year.

XV. CORPORATION IN GOOD STANDING

If CONTRACTOR is a corporation, the undersigned hereby represents and warrants that the corporation is duly incorporated and in good standing in the State of California, and that , whose title is , is authorized to act for and bind the corporation.

XVI. PROVISIONS REQUIRED BY LAW

Each and every provision of law and clause required by law to be inserted in this Agreement shall be deemed to be inserted herein and the Agreement shall be read and enforced as though it were included herein, and if through mistake or otherwise any such provision is not inserted, or is not currently inserted, then upon application of either party the Agreement shall forthwith be physically amended to make such insertion or correction.

XVII. SUBSURFACE HAZARDOUS MATERIALS

A. In the event trenches or other excavations extend deeper than four (4) feet below the surface, the CONTRACTOR shall promptly, and before the following conditions are disturbed, notify the CITY in writing of any:

1. Material that the CONTRACTOR believes may be material that is hazardous waste, as defined in Section 25117 of the Health and Safety Code that is required to be removed to a Class I, Class II or Class III disposal site in accordance with the provisions of existing law.
2. Subsurface or latent physical conditions at the site differing from those indicated.
3. Unknown physical conditions at the site of any unusual nature, different materially from those ordinarily encountered and generally recognized as inherent in the Work or the character provided for in the CONTRACT.

B. Upon receipt of said notification the CITY will investigate the conditions, and if it finds that the conditions do materially so differ, or do involve hazardous waste, and cause a decrease or increase in the CONTRACTOR's cost of or the time required for performance of any part of the work, the CITY will issue a change order under the procedures described in the General Conditions.

C. In the event that a dispute arises between the CITY and the CONTRACTOR whether the conditions materially differ, or involve hazardous waste or cause a decrease or increase in the CONTRACTOR's cost of or time required for performance of any part of the work, the CONTRACTOR shall not be excused from any scheduled completion date provided for by the Agreement, but shall proceed with all work to be performed under the Agreement. The CONTRACTOR shall retain any and all rights provided either by Agreement or by law which pertain to the resolution of disputes and protests between the contracting parties.

XVIII. LIQUIDATED DAMAGES

Pursuant to Government Code Section 53069.85, if work is not completed within the contract time or in strict accordance with the Project Schedule, it is understood, acknowledged and agreed that the CITY will suffer damage. It is therefore agreed that the CONTRACTOR shall pay to the CITY the sum of one thousand dollars ($1,000) for each and every calendar day of delay beyond the Contract Time, or beyond any completion schedule, construction schedule or Project milestones established in or pursuant to the

Project Schedule, or beyond the time indicated in the Project Schedule for any individual Contract activity.

CONTRACTOR expressly understands, acknowledges and agrees that such liquidated damages can and shall be imposed if the CONTRACTOR does not meet each and every aspect of any activity schedule, completion schedule, construction schedule or Project milestones established in or pursuant to the Project Schedule. If the CITY accepts work or makes any payment under this Agreement after a default by reason of delays, the acceptance of such work and/or payment(s) shall in no respect constitute a waiver or modification of any provisions regarding Contract Time, a completion schedule, the Project Schedule or the accrual of liquidated damages. In the event the same is not paid, the CONTRACTOR further agrees that the CITY may deduct the amount thereof from any money due or that may become due the CONTRACTOR under the Agreement. This Article does not exclude recovery of damages under provisions of the Contract Documents, and is expressly in addition to the CITY's ability to seek other damages.

CONTRACTOR is to refer to Section Project Construction Schedule for duration of individual activities. Liquidated damages may be assessed if any individual activity duration exceeds the time indicated for that activity on the Project Construction Schedule.

XIX. COMPONENT PARTS OF THE CONTRACT

This Agreement entered into consists of the following CONTRACT DOCUMENTS, all of which are component parts of the Agreement as if herein set out in full or attached hereto:

Notice Inviting Bids
Scope of Summary
Information for Bidders
Bid Form
Non-Collusion Affidavit
Site Visit Certification
Faithful Performance Bond
Labor and Materials Payment Bond
General Conditions
Supplementary General Conditions
Special Conditions
Proposed Subcontractors
Bid Bond
Information Required of Bidder
Contract
Certificate Re. Worker's Compensation
Drug-free Workplace Certification
Plans and Specifications
Addenda
Drawings
Change Orders
Shop Drawings Transmittals

All of the above named CONTRACT DOCUMENTS are intended to be complementary. Work required by one of the above named CONTRACT DOCUMENTS and not by others shall be done as if required by all.

XX. ENTIRE CONTRACT

This Agreement constitutes the entire contract of the parties. No other agreements or contracts, whether oral or written, pertaining to the work to be performed, exist between the parties. This Agreement can be modified only by an amendment in writing, signed by both parties.

CONTRACTOR	**CITY** City of El Centro
By: _____	By: _____
Title: _____	Title: _____
Date: _____	Date: _____

ATTACHMENTS:

Faithful Performance Bond
Labor and Materials Bond

PERFORMANCE BOND

Whereas, The City Council of the City of El Centro, State of California, and _____ (hereinafter designated as "principal") have entered into an agreement whereby principal agrees to install and complete certain designated public improvements, which said agreement, dated _____, 20__, and identified as project _____, is hereby referred to and made a part hereof; and

Whereas, Said principal is required under the terms of said agreement to furnish a bond for the faithful performance of said agreement.

Now, therefore, we, the principal and _____, as surety, are held and firmly bound unto the City of El Centro (hereinafter designated as "El Centro") in the penal sum of _____ dollars ($_____) lawful money of the United States, for the payment of which sum well and truly to be made, we bind ourselves, our heirs, successors, executors and administrators, jointly and severally, firmly by these presents.

The condition of this obligation is such that if the above-bounded principal, his or its heirs, executors, administrators, successors or assigns, shall in all things stand to and abide by, and well and truly keep and perform the covenants, conditions and provisions in the said agreement and any alteration thereof made as therein provided, on his or their part, to be kept and performed at the time and in the manner therein specified, and in all respects according to their true intent and meaning, and shall indemnify and save harmless El Centro, its officers, agents and employees, as therein stipulated, then this obligation shall become null and void; otherwise it shall be and remain in full force and effect.

As a part of the obligation secured hereby and in addition to the face amount specified therefor, there shall be included costs and reasonable expenses and fees, including reasonable attorney's fees, incurred by El Centro in successfully enforcing such obligation, all to be taxed as costs and included in any judgment rendered.

The surety hereby stipulates and agrees that no change, extension of time, alteration or addition to the terms of the Agreement or to the work to be performed thereunder or the specifications accompanying the same shall in anywise affect its obligations on this bond, and it does hereby waive notice of any such change, extension of time, alteration or addition to the terms of the Agreement or to the work or to the specifications.

In Witness Whereof, this instrument has been duly executed by the principal and surety above named, on _____, 20__.

(SEAL)	(SEAL)
_____	_____
(CONTRACTOR)	(Surety)
By: _____	By: _____
(Signature)	(Signature)

- **END OF PERFORMANCE BOND –**

PAYMENT BOND

PAYMENT BOND

Whereas, the City Council of the City of El Centro, State of California, and _____ (hereinafter designated as "the Principal") have entered into an Agreement dated _____ and described as

_____

_____

whereby the Principal agrees to install and complete certain designated public improvements identified as _____which are part of City project _____, and which Agreement is hereby referred to and made a part hereof; and

Whereas, under the terms of the Agreement, the Principal is required before entering upon the performance of the work to file a good and sufficient payment bond with the City of El Centro to secure the claims referenced in Civil Code Sections 9550 et seq.; and

Now, therefore, the Principal and the undersigned as corporate surety, are held firmly bound unto the City of El Centro and all contractors, subcontractors, laborers, materialmen, and other persons employed in the performance of the Agreement and referenced in Sections 9550 et seq of the Civil Code in the sum of _____dollars ($_____), for materials furnished or labor thereon of any kind, or for amounts due under the Unemployment Insurance Act with respect to this work or labor, that the surety will pay the same in an amount not exceeding the amount hereinabove set forth, and also in case suit is brought upon this bond, will pay, in addition to the face amount thereof, costs and reasonable expenses and fees, including reasonable attorney's fees, incurred by the City of El Centro in successfully enforcing this obligation, to be awarded and fixed by the court, and to be taxed as costs and to be included in the judgment therein rendered.

It is hereby expressly stipulated and agreed that this bond shall inure to the benefit of any and all persons, companies, and corporations entitled to file claims under Section 9550 et seq of the Civil Code, so as to give a right of action to them or their assigns in any suit brought upon this bond.

Should the condition of this bond be fully performed, then this obligation shall become null and void, otherwise it shall be and remain in full force and effect.

The surety hereby stipulates and agrees that no change, extension of time, alteration, or addition to the terms of the Agreement or the specifications accompanying the same shall in any manner affect its obligations on this bond, and it does hereby waive notice of any such change, extension, alteration, or addition.

In witness whereof, this instrument has been duly executed by the principal and surety above named, on_____, 20

_____ _____
(CONTRACTOR) (Surety)

By:_____ By:_____
(Signature) (Signature)

-END OF PAYMENT BOND-

- END OF CONTRACT DOCUMENTS -

GENERAL CONDITIONS

GENERAL CONDITIONS

ARTICLE 1 -- DEFINITIONS

Wherever used in these General Conditions or in the other Contract Documents the following terms have the meanings indicated which are applicable to both the singular and plural thereof. Where an entire word is capitalized in the definitions and is found un-capitalized in the Contract Documents it has the ordinary dictionary definition.

Addenda - Written or graphic instruments issued prior to the opening of Bids which make additions, deletions or revisions to the Contract Documents.

Agent - OWNER is the Agent of OWNER.

Agreement - The written contract between OWNER and CONTRACTOR covering the WORK to be performed; other documents are attached to the Agreement and made a part thereof as provided therein.

Allowance - A Bid item that adds a specified quantity of WORK to the Agreement work scope which OWNER may unilaterally direct CONTRACTOR to perform, or elect not to have performed.

Application for Payment - The form furnished by OWNER which is to be used by CONTRACTOR to request progress or Final Payment and which is to be accompanied by such supporting documentation as is required by the Contract Documents.

Asbestos - Any material that contains more than one (1) percent asbestos and is friable or is releasing asbestos fibers into the air above current action levels established by the United States Occupational Safety and Health Administration ("OSHA").

Beneficial Occupancy - Use by OWNER of the WORK prior to final acceptance.

Bidder - Any individual, firm, partnership, corporation or combination thereof, submitting a Bid for the WORK, acting directly or through a duly authorized representative.

Bid - The offer or proposal of the Bidder submitted on the prescribed form setting forth the price or prices for the WORK.

Bidding Documents - The advertisement or Invitation to Bid, Instructions to Bidders, the Bid form, and the proposed Contract Documents (including all Addenda issued prior to receipt of Bids).

Bonds - Bid, Performance and Payment Bonds and other instruments which protect against loss due to inability or refusal of CONTRACTOR to perform its contract.

Change Order - A document recommended by OWNER which is signed by CONTRACTOR and OWNER and authorizes an addition, deletion or revision in the WORK, or an adjustment in the Contract Price or the Contract Time, issued on or after the Effective Date of the Agreement.

CITY - OWNER (See OWNER's in this section).

City of El Centro - OWNER (See OWNER's definition in this section).

Claim - A dispute becomes a Claim only after CONTRACTOR receives and refuses to accept OWNER's initial determination, and is certified as required by Article 16.3.

Codes - The terms Government Code, Labor Code, etc. refer to codes of the State of California.

OWNER - The individual, partnership, corporation, joint venture or other legal entity named as such by written notice from OWNER.

OWNER Order - A written order issued by OWNER which clarifies or interprets the Procurement Documents or orders minor changes or alterations in the scope of WORK to be furnished but which does not involve a change in the Contract Price or the Contract Time.

Contract Documents - The Notice Inviting Bids, Instructions to Bidders, Bid forms (including the Bid, Bid schedule(s), information required of Bidder, Bid bond, and all required certificates and affidavits), Agreement, Performance Bond, Payment Bond, General Conditions, Supplementary General Conditions, SPECIAL PROVISIONS, Drawings and all Addenda, and Change Orders executed pursuant to the provisions of the Contract Documents.

Contract Milestone - A principal event specified in the Contract Documents relating to an intermediate completion date of a portion of the WORK, or a period of time within which the portion of the WORK should be performed prior to Substantial Completion of all the WORK.

Contract Price - The total monies payable by OWNER to CONTRACTOR under the terms and conditions of the Contract Documents.

Contract Time - The number of successive calendar Days stated in the Contract Documents for the completion of the WORK.

CONTRACTOR - The individual, partnership, corporation, joint venture or other legal entity with whom OWNER has executed the Agreement.

Day - A calendar day of twenty-four (24) hours measured from midnight to the next midnight.

Defective Work - Work that is unsatisfactory, faulty or deficient; or that does not conform to the Contract Documents; or that does not meet the requirements of any inspection, reference standard, test or approval referred to in the Contract Documents; or work that has been damaged by anyone other than OWNER prior to OWNER's recommendation of final payment.

OWNER - The individual, partnership, corporation, joint venture or other legal entity named as such in the Contract Documents or succeeding entity. In the lack thereof, OWNER shall have the same meaning as OWNER.

Demobilization - The complete dismantling and removal by CONTRACTOR of all of CONTRACTOR's temporary facilities, equipment and personnel at the site.

Drawings - The drawings, plans, maps, profiles, diagrams and other graphic representations which indicate the character, location, nature, extent and scope of the WORK and which have been prepared by OWNER and are referred to in the Contract Documents. Shop Drawings are not Drawings as so defined.

Disputed Work - A dispute exists from the time CONTRACTOR disagrees with a decision or determination made by OWNER until OWNER renders an initial determination. If the issue is unresolved it becomes a Claim.

Effective Date of the Agreement - The date indicated in the Agreement on which it becomes effective, but if no such date is indicated it means the date on which the Agreement is signed and delivered by the last of the two parties to sign and deliver.

Engineer - Wherever the word Engineer is found in these Contract Documents or in any referenced document, it shall mean OWNER.

Field Order - A written order issued by OWNER which changes the Agreement WORK scope and involves a change in the Contract Price or Contract Time or the intent of the Agreement.

Final Payment - is defined as the last progress payment made to CONTRACTOR for earned funds, less retainage as applicable, less deductions listed in Article 14. CONTRACTOR is entitled to this payment when the Notice of Completion is issued.

General Conditions - Section General Conditions of the Contract Specification.

Hazardous Waste - The term Hazardous Waste shall have the meaning provided in Section 104 of the Solid Waste Disposal Act (42 USC Section 6903) as amended from time to time or, as defined in section 25117 of the Health and Safety Code, that is required to be removed to a class I, class II or class III disposal site in accordance with provisions of existing law, whichever is more restrictive.

Holidays - Legal Holidays observed by OWNER occur on:

New Year's Day - January 1
Martin Luther King's Birthday - Third (3rd) Monday in January
President's Day - Third (3rd) Monday in February
Good Friday – The afternoon of the Friday before Easter
Memorial Day - Last Monday in May
Juneteenth – June 19

Independence Day - July 4
Labor Day - First (1st) Monday in September
Veteran's Day - November 11
Thanksgiving Day - Fourth (4th) Thursday in November
The Day after Thanksgiving – The Friday after the fourth (4th) Thursday in November
Christmas Eve – The afternoon of December 24
Christmas Day - December 25
New Year's Eve – The afternoon of December 31

If any Holiday listed above falls on a Saturday, Saturday and the preceding Friday are both legal Holidays. If the Holiday should fall on a Sunday, Sunday and the following Monday are both legal Holidays.

Interfacing Work - Work which connects to, abuts or meets with work of another contractor.

Laws and Regulations - Any and all applicable laws, rules, regulations, ordinances, codes and/or orders of any and all governmental bodies, agencies, authorities and courts having jurisdiction.

Lump Sum Work - Work to be paid on the basis of lump sum prices.

Mechanic's Lien - A form of security, an interest in real property, which is held to secure the payment of an obligation. When referred to in these Contract Documents, Mechanic's Lien or lien means Stop Notice.

Milestone - See Contract Milestone.

Mobilization - The establishment by CONTRACTOR of the temporary facilities, equipment and personnel at the site thereby enabling the WORK to commence.

Notice of Award - The written notice by OWNER to the apparent low Bidder stating that upon compliance by the apparent low Bidder with the conditions precedent enumerated therein within the time specified, OWNER will enter into an Agreement.

Notice of Completion - A form signed by OWNER, OWNER and CONTRACTOR recommending to OWNER that the WORK is complete and fixing the date of completion. After acceptance of the WORK by OWNER's governing body, the form is signed by OWNER and filed with the County Recorder. This filing starts the thirty (30) Day lien filing period on the WORK.

Notice to Proceed - The written notice issued by OWNER to CONTRACTOR authorizing CONTRACTOR to proceed with the WORK and establishing the date of commencement of the Contract Time.

OWNER's Agent - OWNER is OWNER's Agent.

OWNER - The City of El Centro, acting through its legally designated officials, officers or employees.

Partial Utilization - Use by OWNER of a substantially completed part of the WORK for the purpose for which it is intended prior to Substantial Completion of all the WORK. (See Beneficial Occupancy)

PCBs - Polychlorinated biphenyls.

Petroleum - Petroleum, including crude oil or any fraction thereof which is liquid at standard conditions of temperature and pressure (sixty (60) degrees Fahrenheit and fourteen and seven-tenths (14.7) pounds per square inch absolute), such as oil, petroleum, fuel oil, oil sludge, oil refuse, gasoline, kerosene and oil mixed with other non-Hazardous Wastes and crude oils.

Project - The total construction of which the WORK to be provided under the Contract Documents may be the whole, or a part as indicated elsewhere in the Contract Documents.

Radioactive Material - Source, special nuclear or byproduct material as defined by the Atomic Energy Act of 1954 (42 USC Sections 2011 *et seq*.) as amended from time to time.

Request for Information - The standardized form furnished by OWNER for CONTRACTOR's use when making written requests for information to OWNER, and upon which the response will be answered and returned.

Request for Proposal - The standardized form used by OWNER to request a proposal from CONTRACTOR for proposed changes in the WORK.

Samples - Physical examples of materials, equipment or workmanship that are representative of some portion of the WORK and which establish the standards by which such portion of the WORK will be judged.

Safety - Safety includes health and security.

Shop Drawings - All drawings, diagrams, illustrations, schedules and other data which are specifically prepared by or for CONTRACTOR and submitted by CONTRACTOR to illustrate some portion of WORK and all illustrations, brochures, standard schedules, performance charts, instructions and diagrams to illustrate material or equipment for some portion of the WORK.

Specifications – The directions, provisions and requirements contained in the Bidding Documents, contract forms, conditions of the Agreement and the SPECIAL PROVISIONS, as listed in the Table of Contents.

Stop Notice - A legal remedy for Subcontractors and Suppliers who contribute to public works, but who are not paid for their work, which secures payment from construction funds possessed by OWNER. For public property, the Stop Notice remedy is designed to substitute for Mechanic's Lien rights.

Submittals - The information which is specified for submission to OWNER in accordance with Article 6.20 of the General Conditions.

Sub-Consultant - The individual, partnership, corporation, joint venture or other legal entity having a direct contract with OWNER, OWNER or with any of their consultants to furnish services with respect to the Project and who is identified as such in the Supplementary General Conditions.

Subcontractor - An individual, partnership, corporation, joint venture or other legal entity having a direct contract with CONTRACTOR or with any other Subcontractor for the performance of a part of the WORK at the site.

Substantial Completion - Refers to when the WORK has progressed to the point where, in the opinion of OWNER as evidenced by Notice of Completion as applicable, it is sufficiently complete, in accordance with the Contract Documents, so that the WORK can be utilized for the purposes for which it is intended, and after the operation demonstration is complete, where applicable.

SPECIAL PROVISIONS – That section of the Contract Documents consisting of written technical descriptions of products and execution of the WORK.

Supplementary General Conditions - The part of the Contract Documents which make additions, deletions or revisions to these General Conditions.

Supplier - A manufacturer, fabricator, supplier, distributor, material worker or vendor.

Underground Utilities - All pipelines, conduits, ducts, cables, wires, manholes, vaults, tanks, tunnels or other such facilities or attachments, and any encasement containing such facilities which have been installed underground to furnish any of the following services or materials: electricity, gases, steam, liquid petroleum products, telephone or other communications, cable television, sewage and drainage removal, traffic or other control systems or water.

Unit Price Work - Specific WORK scope included in the Agreement WORK scope to be paid for on the basis of unit prices. OWNER may unilaterally direct CONTRACTOR to perform the WORK, or elect not to have the WORK performed.

WORK - The entire completed construction or the various separately identifiable parts thereof required to be furnished under the Contract Documents. WORK is the result of performing or furnishing labor and furnishing and incorporating materials and equipment into the construction, and performing or furnishing services and furnishing documents, all as required by the Contract Documents.

Work Change Directive - A written directive to CONTRACTOR, issued on or after the Effective Date of the Agreement and recommended by OWNER, and signed by OWNER ordering an addition, deletion or revision in the WORK, or responding to differing or unforeseen physical conditions under which the WORK is to be performed or to emergencies. A Work Change

Directive will not change the Contract Price or the Contract Time, but is evidence that the parties expect that the change directed or documented by a Work Change Directive will be incorporated in a subsequently issued Change Order following negotiations by the parties as to its effect, if any, on the Contract Price or Contract Time.

ARTICLE 2 -- PRELIMINARY MATTERS

2.1 DELIVERY OF BONDS/INSURANCE CERTIFICATES - When CONTRACTOR delivers the signed Agreements to OWNER, CONTRACTOR shall also deliver to OWNER such Bonds and Insurance Policies and Certificates as CONTRACTOR may be required to furnish in accordance with the Contract Documents.

2.2 COPIES OF DOCUMENTS - OWNER shall furnish to CONTRACTOR ten (10) copies of the Contract Documents as specified in the Agreement and ten (10) sets of full-scale Drawings. Additional quantities of the Contract Documents will be furnished at reproduction cost.

2.3 COMMENCEMENT OF CONTRACT TIME; NOTICE TO PROCEED - The Contract Time will start to run on the commencement date stated in the Notice to Proceed.

2.4 STARTING THE WORK - CONTRACTOR shall begin to perform the WORK within ten (10) Days after the commencement date stated in the Notice to Proceed, but no work shall be done at the site prior to said commencement date. In addition, any requirements in the Supplemental General Conditions must be satisfied.

2.5 CONTRACTOR MUST STUDY CONTRACT DOCUMENTS - Before undertaking each part of the WORK, CONTRACTOR shall carefully study and compare the Contract Documents and check and verify pertinent figures shown thereon and all applicable field measurements. CONTRACTOR shall promptly report in writing to OWNER any conflict, error or discrepancy which CONTRACTOR may discover and shall obtain a written interpretation or clarification from OWNER before proceeding with any work affected thereby.

2.6 PRELIMINARY SUBMITTALS - Preliminary submittals shall be provided to OWNER in accordance with Division 1 requirements.

2.7 PRECONSTRUCTION CONFERENCE - CONTRACTOR is required to attend a preconstruction conference. This conference will be attended by OWNER and others as appropriate in order to discuss the WORK in accordance with the applicable procedures specified in the General Requirements.

CONTRACTOR is required to schedule and attend a preconstruction conference with the Imperial Irrigation District ("IID") prior to the construction or demolition of any electrical improvements.

2.8 SUBCONTRACTOR MOBILIZATION MEETING - Prior to the start of each major Subcontractor's site work, CONTRACTOR, the involved Subcontractor and OWNER shall attend a pre-start meeting to discuss the schedule, coordination, procedures and other administrative issues.

2.9 CONTRACTOR DUTY TO ADVISE OWNER OF KNOWN OR DISCOVERED PROBLEMS - CONTRACTOR is reminded of his obligation to advise OWNER of any errors and/or omissions in the Contract Documents, or changes to thereof, which CONTRACTOR may be aware through special knowledge or discovered during the Bid process.

ARTICLE 3 -- CONTRACT DOCUMENTS: INTENT, AMENDING, REUSE

3.1 INTENT - The Contract Documents comprise the entire agreement between OWNER and CONTRACTOR concerning the WORK. The Contract Documents are complementary; what is called for by one is as binding as if called for by all. The Contract Documents will be construed in accordance with the law of the place of the WORK.

3.2 INTENT OF WORK TO BE FUNCTIONALLY COMPLETE

3.2.1 Work to be Complete - It is the intent of the Contract Documents to describe the WORK to be constructed in accordance with the Contract Documents. Any work, materials or equipment that may reasonably be inferred from the Contract Documents or from prevailing custom or trade usage as being required to produce the intended result shall be supplied whether or not specifically called for or identified in the Contract Documents. When words or phrases which have a well-known technical or construction industry or trade meaning are used to describe work, materials or equipment, such words or phrases shall be interpreted in accordance with that meaning unless a definition has been provided in Article 1 of the General Conditions.

3.2.2 Necessary Utilities - If utilities to equipment/fixtures are not shown but are necessary to operate the equipment/fixtures, the utilities service installation is considered to be part of the WORK. The implied WORK will conform to the appropriate sections of the technical Specifications.

3.3 CLARIFICATIONS AND INTERPRETATIONS OF THE CONTRACT DOCUMENTS

3.3.1 Referenced Standards - Reference to standard specifications, manuals or Codes of any technical society, organization or association or to the laws or regulations of any governmental authority, whether such reference be specific or by implication, shall mean the latest standard specification, manual, code or laws or regulations in effect at the time of opening of Bids, except as may be otherwise specifically stated. However, no provision of any referenced standard specification, manual or code shall be effective to change the duties and responsibilities of OWNER, CONTRACTOR or OWNER or any of their consultants, agents or employees from those set forth in the Contract Documents.

3.3.2 Discovery of Problem Notice - If, during the performance of the WORK, CONTRACTOR discovers any conflict, error, ambiguity or discrepancy with the WORK within the Contract Documents or between the Contract Documents and any provision of any such Laws and Regulations applicable to the performance of the WORK or of any such standard, specification, manual or code or of any instruction of any Supplier, CONTRACTOR shall report it to OWNER in writing within seven (7) calendar Days of discovery. CONTRACTOR shall not proceed with

the WORK affected thereby, except in an emergency, unless directed by OWNER. Any WORK performed by CONTRACTOR that is not directed by OWNER shall be at its own risk.

3.3.3 Order of Precedence of Contract Documents - In resolving conflicts resulting from errors or discrepancies in any of the Contract Documents, the order of precedence shall be as follows:

3.3.3.1 Permits from other agencies as may be required by law.

3.3.3.2 Change Orders

3.3.3.3 Agreement

3.3.3.4 Addenda

3.3.3.5 CONTRACTOR's Bid (Bid Form)

3.3.3.6 Notice Inviting Bids

3.3.3.7 Instructions to Bidders

3.3.3.8 Supplementary General Conditions

3.3.3.9 General Conditions

3.3.3.10 SPECIAL PROVISIONS

3.3.3.11 Drawings

3.3.3.12 Referenced Standard Specifications

3.3.4 Order of Precedence of the Drawings - With reference to the Drawings the order of precedence is as follows:

3.3.4.1 Figures govern over scaled dimensions

3.3.4.2 Detail drawings govern over general drawings

3.3.4.3 Addenda/Change Order drawings govern over Contract Drawings

3.3.4.4 Contract Drawings govern over standard drawings

3.4 AMENDING AND SUPPLEMENTING CONTRACT DOCUMENTS

3.4.1 Amending Contract Documents - The Contract Documents may be amended to provide for additions, deletions and revisions in the WORK or to modify the terms and conditions thereof by a Change Order pursuant to Article 10.

3.4.2 Supplementing Contract Documents - The requirements of the Contract Documents may be supplemented, and minor variations and deviations in the WORK may be authorized, by:

3.4.2.1 - A OWNER Order issued by OWNER.

3.4.2.2 - OWNER's approval of a Shop Drawing or Sample pursuant to Article 6

3.4.2.3 - OWNER's written interpretation or clarification

3.5 REUSE OF DOCUMENTS - Neither CONTRACTOR, nor any Subcontractor or Supplier, nor any other person or organization performing any of the WORK under a contract with OWNER shall have or acquire any title to or ownership rights in any of the Drawings, technical Specifications or other documents used on the WORK, and they shall not reuse any of them on the extensions of the Project or any other project without written consent of OWNER.

ARTICLE 4 -- AVAILABILITY OF LANDS; PHYSICAL CONDITIONS; REFERENCE POINTS

4.1 AVAILABILITY OF LANDS - OWNER shall furnish, as indicated in the Contract Documents, the lands upon which the WORK is to be performed, rights-of-way and easements for access thereto, and such other lands which are designated for the use of CONTRACTOR. Easements for permanent structures or permanent changes in existing facilities will be obtained and paid for by OWNER, unless otherwise provided in the Contract Documents. Nothing contained in the Contract Documents shall be interpreted as giving CONTRACTOR exclusive occupancy of the lands or rights-of-way provided. CONTRACTOR shall provide, at no additional cost, for all additional lands and access thereto that may be required for temporary construction facilities, borrow areas, waste disposal areas or storage of materials and equipment; provided that CONTRACTOR shall not enter upon nor use any property not under the control of OWNER until a written temporary construction easement agreement has been executed by CONTRACTOR and the property owner, and a copy of said easement furnished to OWNER prior to said use; and, neither OWNER nor OWNER shall be liable for any claims or damages resulting from CONTRACTOR's unauthorized trespass or authorized use of any such properties.

4.2 PHYSICAL SITE CONDITIONS

4.2.1 Reports and Drawings - Reference is made to the Supplementary General Conditions for identification of:

4.2.1.1 Subsurface Condition Reports - Those reports of explorations and tests of subsurface conditions at or contiguous to the site that have been utilized by OWNER in preparing the Contract Documents; and

4.2.1.2 Drawings of Existing Structures - Reference is made to the Supplementary General Conditions for identification of those drawings of physical conditions in or relating to existing surface and subsurface structures (except Underground Utilities referred to in section 4.4 of Article

4 herein) which are at or contiguous to the site that have been utilized in the preparation of the Contract Documents.

4.2.2 Limited Reliance By CONTRACTOR On The Technical Data - CONTRACTOR may rely upon the accuracy of the technical data contained in such drawings or reports, however, nontechnical data, interpretations and opinions contained in such drawings or reports are not to be relied on by CONTRACTOR. CONTRACTOR may not rely upon or make any claims against OWNER, OWNER or OWNER with respect to:

4.2.2.1 the completeness of such reports and drawings for CONTRACTOR's purposes, including, but not limited to, any aspect of the means, methods, techniques, sequences and procedures of construction to be employed by CONTRACTOR and Safety precautions and programs incident thereto, or

4.2.2.2 other data, interpretations, opinions and information contained in such reports or shown or indicated in such drawings, or

4.2.2.3 any CONTRACTOR interpretation of or conclusion drawn from any technical data or any such data, interpretations, opinions or information.

4.3 DIFFERING SITE CONDITIONS - If CONTRACTOR believes that any subsurface or physical condition at or contiguous to the site that is uncovered or revealed either:

4.3.1 is of such a nature as to establish that any technical data on which CONTRACTOR is entitled to rely as provided in paragraphs 4.2.1 is materially inaccurate, or

4.3.2 is of such a nature as to require a change in the Contract Documents, or

4.3.3 differs materially from that shown or indicated in the Contract Documents, or

4.3.4 is of an unusual nature and differs materially from conditions ordinarily encountered and generally recognized as inherent in work of the character provided for in the Contract Documents, CONTRACTOR shall immediately report it to OWNER then CONTRACTOR shall, promptly after becoming aware thereof and before further disturbing conditions thereby or performing any work in connection therewith (except in an emergency as permitted by paragraph 6.23), notify OWNER and OWNER in writing about such condition. CONTRACTOR shall not further disturb such conditions or perform any work in connection therewith (except as aforesaid) until receipt of written order to do so.

4.3.5 OWNER Responsibility - OWNER shall promptly investigate the conditions, and if it finds that the conditions do materially so differ and cause a decrease or increase in CONTRACTOR's cost of, or the time required for, performance of any part of the WORK, OWNER shall issue a Change Order under the procedures described in Article 10. If OWNER determines that there is no bona fide work scope change or is a minor change which does not impact time or cost, OWNER shall notify CONTRACTOR of this finding within thirty (30) Days.

4.3.6 Disputed Work – If CONTRACTOR and OWNER are unable to reach agreement on Disputed Work, OWNER may direct CONTRACTOR to proceed with the WORK. Payment shall be as later directed by mediation or arbitration, if OWNER and CONTRACTOR agree thereto, or as fixed in a court of law.

Although not to be construed as proceeding under extra work provisions, CONTRACTOR shall keep and furnish records of Disputed Work in accordance with 11.3.

4.3.7 Disallowance of Entitlement - CONTRACTOR shall not be entitled to any adjustment in the Contract Price or Contract Time or will be deemed to have waived his right to such a claim if:

4.3.7.1 CONTRACTOR knew of the existence of such conditions at the time CONTRACTOR made a final commitment to OWNER in respect of Contract Price and Contract Time by the submission of a Bid or becoming bound under the Agreement; or

4.3.7.2 the existence of such condition could reasonably have been discovered or revealed as a result of any examination, investigation of the site and contiguous areas suggested or required by the Bidding Documents: or

4.3.7.3 CONTRACTOR failed to give the written notice within the time and as required by Article 3.3.2.

4.4 UNDERGROUND UTILITIES

4.4.1 Utilities Indicated - The information and data indicated in the Contract Documents with respect to existing Underground Utilities at or contiguous to the site are based on information and data furnished to OWNER or OWNER by the owners of such Underground Utilities or by others. Unless it is expressly provided in the Supplementary General Conditions and/or the General Conditions, OWNER and OWNER shall not be responsible for the accuracy or completeness of any such information or data, and CONTRACTOR shall have full responsibility for reviewing and checking all such information and data, for locating all Underground Utilities indicated in the Contract Documents, for coordination of the WORK with the owners of such Underground Utilities during construction, for the Safety and protection thereof and repairing any damage thereto resulting from the WORK, the cost of which will be considered as having been included in the Contract Price.

4.4.2 Utilities Not Indicated - If Underground Utilities are uncovered or revealed at or contiguous to the site which was not indicated in the Contract Documents and which CONTRACTOR could not reasonably have been expected to be aware of, CONTRACTOR shall identify the owner of such Underground Utilities and give written notice thereof to that owner and shall notify OWNER in accordance with the requirements of the General Conditions and General Requirements.

4.4.3 Action Prior To Starting Work - As provided in section 4216 of the California Government Code, at least two (2) working Days prior to commencing any excavation, CONTRACTOR shall contact the regional notification center (Underground Service Alert of Southern California) and obtain an inquiry identification number.

4.4.4 Locate Utilities - CONTRACTOR shall determine the location and depth of all utilities, including service connections, which have been marked by the respective owners and which may affect or be affected by its operations. Full compensation for such work shall be considered as included in CONTRACTOR's Bid price.

4.4.5 Protection Of Utilities - CONTRACTOR shall not interrupt the service function or disturb the support of any utility, without authority from OWNER or order from the utility owner. All valves, switches, vaults and meters shall be maintained readily accessible for emergency shutoff. Where protection is required to ensure support of utilities located as shown on the Plans, CONTRACTOR shall, unless otherwise provided, furnish and place the necessary protection at its expense.

4.4.6 Notification Requirements If Utility Disturbed - CONTRACTOR shall immediately notify OWNER and utility owner if any utility is disturbed or damaged. CONTRACTOR shall bear the costs of repair or replacement of any utility damaged by CONTRACTOR.

4.4.7 Removal Of Abandoned Utilities - Unless otherwise specified, CONTRACTOR shall remove all interfering portions of utilities shown on the Plans or indicated in the Bidding Documents as abandoned. Before starting removal operations, CONTRACTOR shall ascertain from the Utility Owner whether the abandonment is complete. The costs involved in the removal and disposal shall be included in the price for the item of work necessitating such removals.

4.4.8 Relocation Of Utilities

4.4.8.1 When the Plans or Specifications provide for CONTRACTOR to alter, relocate or reconstruct a utility, all costs for such work shall be included in the Bid.

4.4.8.2 Temporary or permanent relocation or alteration of indicated utilities requested by CONTRACTOR for its convenience shall be its responsibility, and CONTRACTOR shall make all arrangements and bear all costs.

4.4.8.3 After award of the Agreement, portions of utilities not indicated in the Contract Documents which are found to interfere with the WORK may be relocated, altered or reconstructed by the utility owner, or OWNER may order changes in the WORK to avoid interference. Such changes will be paid for in accordance with Article 10.

4.4.9 Delays

4.4.9.1 CONTRACTOR shall immediately notify in writing the utility owner and OWNER of its construction schedule and any subsequent changes in the construction schedule which will affect the time available for protection, removal or relocation of utilities.

4.4.9.2 CONTRACTOR will not be entitled to damages or additional payment for delays attributable to utility relocations or alterations if correctly located, as noted in the Contract Documents.

4.4.9.3 CONTRACTOR may be given a no cost extension of time for unforeseen delays attributable to unreasonably protracted interferences by others in the relocation of utilities.

4.4.10 Access to the WORK - When necessary, CONTRACTOR shall so conduct its operations as to permit access to the WORK site and provide time for utility work to be accomplished during normal work hours during the progress of the WORK.

4.5 REFERENCE POINTS

4.5.1 Bench Mark - The CONSTRUCTION MANAGER will provide one (1) benchmark, near or on the site of the WORK, and will provide two (2) points near or on the site to establish a base line for use by CONTRACTOR for alignment control. Unless otherwise specified in the General Requirements, CONTRACTOR shall furnish all other lines, grades and benchmarks required for proper execution of the WORK.

4.5.2 Protection of Bench Marks - CONTRACTOR shall preserve all bench marks, stakes and other survey marks, and in case of their removal or destruction by any party, CONTRACTOR shall be responsible for the accurate replacement of such reference points by personnel qualified under Division 3, Chapter 15 of the California Business and Professions Code. CONTRACTOR shall report to OWNER whenever a reference point is lost, destroyed or requires relocation.

4.6 ASBESTOS, PCBS, PETROLEUM, HAZARDOUS WASTE OR RADIOACTIVE MATERIAL

4.6.1 OWNER Responsibility - OWNER shall be responsible for any hazardous material which includes hazardous substances and hazardous waste as defined by sections 25316 and 25117 of the Health and Safety Code, uncovered or revealed at the site which was not identified in the Contract Documents to be within the scope of the WORK. OWNER shall not be responsible for any such materials brought to the site by CONTRACTOR, Subcontractors, Suppliers or anyone else for whom CONTRACTOR is responsible.

4.6.2 CONTRACTOR's Responsibility - When such hazardous material is encountered, CONTRACTOR shall immediately stop all work in connection with such hazardous condition in any area affected thereby (except in an emergency as required by Article 6) and notify OWNER and OWNER in writing. OWNER shall promptly evaluate such hazardous condition and take corrective action. CONTRACTOR shall not be required to resume work in any such affected area until after OWNER has delivered to CONTRACTOR written notice specifying that such condition and any affected area has been rendered safe for the re-assumption of work, or specifying any special conditions under which such work may be resumed safely.

4.6.3 Dispute - If, after receipt of such special written notice, CONTRACTOR does not agree to resume work based on a reasonable belief it is unsafe, or does not agree to resume work under such special conditions, then OWNER may order such portion of the work that is in connection with such hazardous condition or in such affected area to be deleted from the WORK. OWNER may have such deleted portion of the work performed by OWNER's own forces or others in

accordance with Article 7. If OWNER and CONTRACTOR cannot agree as to entitlement to or the amount or extent of an adjustment, if any, in Contract Price or Contract Time as a result of work stoppage or of deleting such portion of the WORK, then either party may make a Claim as provided in Article 16.

4.6.4 NOT USED

ARTICLE 5 -- BONDS AND INSURANCE

5.1 PERFORMANCE, PAYMENT AND OTHER BONDS

5.1.1 Bond Requirement - CONTRACTOR shall furnish Performance and Payment Bonds, each in the amount set forth in the Supplementary General Conditions as security for the faithful performance and payment of all CONTRACTOR's obligations under the Contract Documents. These Bonds shall remain in effect at least until one (1) year after the filing date of Notice of Completion, except as otherwise provided by law or regulation or by the Contract Documents. CONTRACTOR shall also furnish such other Bonds as are required by the Supplementary General Conditions.

5.1.2 Licensed Surety - All Bonds shall be in the form prescribed by the Contract Documents and by such sureties which are admitted insurers in the State of California and are subject to regulation by the Department of Insurance, and which also satisfy the requirements stated in section 995.660 of the Code of Civil Procedure, except as provided otherwise by Laws or Regulations. All Bonds signed by an agent must be accompanied by a certified copy of such agent's authority to act. Surety companies must be duly licensed or authorized in the jurisdiction in which the Project is located to issue Bonds for the limits so required. Such surety companies shall also meet such additional requirements and qualifications as may be provided in the Supplementary General Conditions.

5.1.3 Bankrupt or Insolvent Surety - If the surety on any Bond furnished by CONTRACTOR is declared bankrupt or becomes insolvent or its right to do business is terminated in any state where any part of the WORK is located, CONTRACTOR shall within seven (7) Days thereafter substitute another Bond and Surety, which must be acceptable to OWNER per paragraph 5.1.1 and 5.1.2 above.

5.2 NOT USED

ARTICLE 6 -- CONTRACTOR'S RESPONSIBILITIES

6.1. Responsibility Of CONTRACTOR To Perform - Unless otherwise specified in the Contract Documents, CONTRACTOR shall furnish and assume full responsibility for all materials, equipment, labor, transportation, construction equipment and machinery, tools, appliances, fuel, power, light, heat, telephone, water, sanitary facilities and all other facilities and incidentals necessary for the furnishing, performance, testing, start-up and completion of the

WORK. Such support that may need to be provided after normal working hours will be provided by CONTRACTOR at its expense.

6.2 Labor, Materials and Equipment All materials and equipment to be incorporated into the WORK shall be of good quality and new, except as otherwise provided in the Contract Documents. All warranties and guarantees specifically called for by the Specifications shall expressly run to the benefit of OWNER. If required by OWNER, CONTRACTOR shall furnish satisfactory evidence (including reports of required tests) as to the kind and quality of materials and equipment. All materials and equipment shall be applied, installed, connected, erected, used, cleaned and conditioned in accordance with the instructions of the applicable Supplier except as otherwise provided in the Contract Documents; but no provisions of any such instructions will be effective to assign to OWNER, any duty or authority to supervise or direct the furnishing or performance of the WORK.

6.2.1 The completed work shall include all necessary permanent Safety devices, such as machinery guards, emergency stops and similar Safety items required by OSHA, Cal-OSHA and other Federal, State and local health and Safety regulations. In addition, all equipment, products, components and/or package systems shall be designed, fabricated and installed in compliance with Seismic Zone 4 structural criteria. Further, any features of the work (including OWNER-selected equipment) subject to such Safety regulations and structural criteria shall be fabricated, furnished and installed in compliance with Seismic Zone 4 structural criteria. CONTRACTOR shall include provisions of this Article in his agreements with Subcontractors, Suppliers and manufacturers of equipment and/or products.

In selecting and/or accepting equipment and/or products for installation in the WORK, OWNER, OWNER and OWNER assume no responsibility for the injury, property damage or any other damages or claims resulting from failure of the equipment, products, components and/or package systems to comply with applicable Safety Codes or requirements, or the Safety requirements of a recognized agency, or failure due to manufacturer's faulty design concepts, or Defective Work and materials. CONTRACTOR shall defend, indemnify and hold OWNER, OWNER and OWNER harmless against any and all liability, claims, suits, damages, costs or expenses caused or claimed to be caused in whole or in part by the negligence or willful misconduct of the construction CONTRACTOR connected with the WORK. However, this indemnity will not extend to any loss, damage or expense caused by the established sole gross negligence or willful misconduct of OWNER or OWNER's Agents, servants or independent contractors.

6.3 SUPERVISION, SUPERINTENDENCE AND QUALITY - CONTRACTOR shall supervise, inspect and direct the WORK competently and efficiently, devoting such attention thereto and applying such skills and expertise as may be necessary to perform the WORK in accordance with the Contract Documents. CONTRACTOR shall be solely responsible for the means, methods, techniques, sequences and procedures of construction and Safety precautions and programs incidental thereto. CONTRACTOR shall be responsible to see that the completed WORK complies accurately with the Contract Documents. CONTRACTOR is solely responsible for the quality of the WORK.

6.4 SUPERINTENDENT

6.4.1 Written Designation of Superintendent - CONTRACTOR shall designate in writing and keep on the work site at all times during its progress a technically qualified, English-speaking superintendent and an alternate who are employees of CONTRACTOR and who shall not be replaced without written notice to OWNER and OWNER. The superintendent will be CONTRACTOR's representative at the site and shall have authority to act on behalf of CONTRACTOR. All communications given to the superintendent shall be as binding as if given to CONTRACTOR. CONTRACTOR shall issue all its communications to OWNER and OWNER through OWNER.

6.4.2 Superintendent's Presence at Site - CONTRACTOR's superintendent or alternate shall be present at the site of the WORK at all times while work is in progress, and shall be available by phone for emergencies twenty-four (24) hours per Day, seven (7) Days per week. Failure to observe this requirement shall be considered suspension of the WORK by CONTRACTOR until such time as such the superintendent is again present at the site.

6.4.3 Removal of Superintendent - Upon written notice, OWNER may require replacement and removal from the WORK of CONTRACTOR's superintendent with cause, in which case CONTRACTOR shall submit a replacement superintendent subject to approval by OWNER, at no increase in Contract Price or Contract Time. Repeated Safety violation on the job site will be sufficient grounds for directing such replacement.

6.5 LABOR - CONTRACTOR shall provide competent, suitably-qualified personnel to survey and lay out the WORK and perform construction as required by the Contract Documents. Any person employed who is found to be incompetent, intemperate, troublesome, disorderly or otherwise objectionable, or who fails or refuses to perform work properly, acceptably and safely, shall be immediately removed from the WORK by CONTRACTOR and not be reemployed on the WORK. CONTRACTOR shall furnish, erect, maintain and remove the construction plant and any temporary works as may be required. CONTRACTOR shall at all times maintain good discipline and order at the site and will not permit the use or consumption of drugs (illegal substances) or alcoholic beverages at the site.

6.5.1 No Additional Compensation for Overtime - Except as otherwise provided in this Article, CONTRACTOR shall receive no additional compensation for overtime work, (i.e., work in excess of eight (8) hours in any one (1) calendar Day or forty (40) hours in any one (1) calendar week) even though such overtime work may be required under emergency conditions and may be ordered by OWNER in writing. Additional compensation will be paid CONTRACTOR for overtime work only in the event extra work is ordered by OWNER, and the Change Order specifically authorizes the use of overtime work and then only to such extent as overtime wages are regularly being paid by CONTRACTOR for overtime work of a similar nature in the same locality.

6.5.2 Approval Required to Work Outside Normal Work Hours - Except in connection with the Safety or protection of persons or the WORK or property at the site or adjacent thereto, and except as otherwise indicated in the Contract Documents, all work at the site shall be performed during normal working hours, and CONTRACTOR will not permit overtime work or the performance of work on Saturday, Sunday or any holiday observed by OWNER without

OWNER's written consent. CONTRACTOR shall apply for this consent through OWNER. OWNER has to approve CONTRACTOR working Holidays, weekends or overtime. CONTRACTOR will be responsible for reimbursing OWNER for all cost to provide inspection services required to monitor WORK outside of normal working hours. CONTRACTOR will be charged for this actually incurred direct hourly cost plus OWNER-approved overhead cost plus OWNER-approved profit, and a deductive Change Order will be issued to cover this expense.

6.5.3 SUBCONTRACT LIMITATIONS - CONTRACTOR shall perform not less than twenty (20) percent of the WORK with its own forces without subcontracting. This requirement refers to the WORK whose value will not be less than twenty (20) percent of the Contract Price.

6.6 PROGRESS SCHEDULE - CONTRACTOR shall adhere to the progress schedule established in accordance with the General Requirements as it may be adjusted from time to time as provided below:

6.6.1 Non Impacting Adjustments - CONTRACTOR shall submit to OWNER for acceptance proposed adjustments in the progress schedule that will not change the Contract Time (or Milestones). Such adjustments will conform generally to the progress schedule then in effect and additionally will comply with any provisions of the General Requirements applicable thereto.

6.6.2 Revisions To Milestones - Proposed revisions in the progress schedule that will change the Contract Times (or Milestones) shall be submitted in accordance with the requirements of Article 12. Such adjustments may only be made by a Change Order in accordance with Article 12 of the General Conditions.

6.7 SUBSTITUTES OR "OR-EQUAL" ITEMS - Whenever an item of material or equipment is specified or described in the Contract Documents by using the name of a proprietary item or the name of a particular Supplier, the specification or description is intended to establish the type, function, appearance and quality required. Unless the specification or description contains or is followed by words reading that no like, equivalent or "or-equal" item or no substitution is permitted, other items of material or equipment or material or equipment of other Suppliers may be submitted to OWNER for review under the circumstances described below.

6.7.1 "Or-Equal" Items*:* If in OWNER's sole discretion an item of material or equipment proposed by CONTRACTOR is functionally equal to that named and sufficiently similar so that no change in the WORK will be required, it may be considered by OWNER as an "or-equal" item, in which case review and approval of the proposed item may, in OWNER's sole discretion, be accomplished without compliance with some or all of the requirements for approval of proposed substitute items. A proposed item of material or equipment will be considered functionally equal to an item so named if:

a. in the exercise of reasonable judgment OWNER determines that:
   i. it is at least equal in materials of construction, quality, durability, appearance, strength and design characteristics;
   ii. it will reliably perform at least equally well the function and achieve the results imposed by the design concept of the WORK as a functioning whole;

iii. it has a proven record of performance and availability of responsive service; and

b. CONTRACTOR certifies that, if approved and incorporated into the WORK:
   i. there will be no increase in cost to OWNER or increase in Contract Time, and
   ii. it will conform substantially to the detailed requirements of the item named in the Contract Documents.

6.7.2 Substitute Items

a. If in CONTRACT MANAGER's sole discretion an item of material or equipment proposed by CONTRACTOR does not qualify as an "or-equal," it will be considered a proposed substitute item.
b. CONTRACTOR shall submit sufficient information as provided below to allow CONTRACT MANAGER to determine that the item of material or equipment proposed is essentially equivalent to that named and an acceptable substitute therefore. Requests for review of proposed substitute items of material or equipment will not be accepted by CONTRACT MANAGER from anyone other than CONTRACTOR.
c. The procedure requirements for review by CONTRACT MANAGER will be as set forth in Paragraph 6.7.2.d, and as CONTRACT MANAGER may decide is appropriate under the circumstances.
d. CONTRACTOR shall make written application to CONTRACT MANAGER for review of a proposed substitute item of material or equipment that CONTRACTOR seeks to furnish or use. The application:
   i. shall certify that the proposed substitute item will:
      1. perform adequately the functions and achieve the results called for by the general design,
      2. be similar in substance to that specified, and
      3. be suited to the same use as that specified;
   ii. will state:
      1. the extent, if any, to which the use of the proposed substitute item will prejudice CONTRACTOR's achievement of Substantial Completion on time;
      2. whether or not use of the proposed substitute item in the WORK will require a change in any of the Contract Documents (or in the provisions of any other direct contract with OWNER for other work on the Project) to adapt the design to the proposed substitute item; and
      3. whether or not incorporation or use of the proposed substitute item in connection with the WORK is subject to payment of any license fee or royalty;
   iii. will identify:
      1. all variations of the proposed substitute item from that specified, and
      2. available engineering, sales, maintenance, repair and replacement services;

iv. and shall contain an itemized estimate of all costs or credits that will result directly or indirectly from use of such substitute item, including costs of redesign and claims of other contractors affected by any resulting change.

6.7.3 Substitute Construction Methods or Procedures: If a specific means, method, technique, sequence or procedure of construction is expressly required by the Contract Documents, CONTRACTOR may furnish or utilize a substitute means, method, technique, sequence or procedure of construction approved by CONTRACT MANAGER. CONTRACTOR shall submit sufficient information to allow CONTRACT MANAGER, in CONTRACT MANAGER's sole discretion, to determine that the substitute proposed is equivalent to that expressly called for by the Contract Documents. The requirements for review by CONTRACT MANAGER will be similar to those provided in Paragraph 6.7.2.d.

6.7.4 Contract Manager's Evaluation: CONTRACT MANAGER will be allowed a reasonable time within which to evaluate each proposal or submittal made pursuant to Paragraphs 6.7.2.d and 6.7.3. CONTRACT MANAGER may require CONTRACTOR to furnish additional data about the proposed substitute item. CONTRACT MANAGER will be the sole judge of acceptability. No "or equal" or substitute will be ordered, installed or utilized until CONTRACT MANAGER's review is complete, which will be evidenced by either a Change Order for a substitute or an approved Shop Drawing for an "or equal." CONTRACT MANAGER will advise CONTRACTOR in writing of any negative determination.

6.7.5 Special Guarantee: OWNER may require CONTRACTOR to furnish at CONTRACTOR's expense a special performance guarantee or other surety with respect to any substitute.

6.7.6 Contract Manager's Cost Reimbursement: CONTRACT MANAGER will record CONTRACT MANAGER's costs in evaluating a substitute proposed or submitted by CONTRACTOR pursuant to Paragraphs 6.7.2.d and 6.7.3. Whether or not CONTRACT MANAGER approves a substitute item so proposed or submitted by CONTRACTOR, CONTRACTOR shall reimburse OWNER for the charges of CONTRACT MANAGER for evaluating each such proposed substitute. CONTRACTOR shall also reimburse OWNER for the charges of CONTRACT MANAGER for making changes in the Contract Documents (or in the provisions of any other direct contract with OWNER) resulting from the acceptance of each proposed substitute.

6.7.7 CONTRACTOR's Expense: CONTRACTOR shall provide all data in support of any proposed substitute or "or-equal" at CONTRACTOR's expense

6.8 PROJECT SITE COORDINATION

6.8.1 Work By Others - CONTRACTOR shall be responsible for ascertaining the nature and extent of any simultaneous, collateral and essential work by others as described in the General Requirements.

CONTRACTOR shall provide staging areas and include work windows for work by others into the overall construction schedule. No additional working days will be allowed for CONTRACTOR's failure to coordinate work by others.

6.8.2 Coordination Of Work - OWNER, CONTRACTOR and each of such workers, contractors and others shall cooperate to minimize interference.

6.8.3 Cost Of Coordination - CONTRACTOR shall include in its Bid all costs involved as a result of coordinating its WORK with others. CONTRACTOR will not be entitled to additional compensation from OWNER for damages resulting from such simultaneous, collateral and essential work. CONTRACTOR's sole and exclusive remedy as a third party beneficiary to other prime contracts for damages caused by another contractor will be a direct action against the separate contractor. If necessary to avoid or minimize such damage or delay, CONTRACTOR shall redeploy its work force to other parts of the WORK.

6.8.4 Obligation to Provide Access - CONTRACTOR shall afford each other contractor who is a party to such a direct contract and each utility owner (or OWNER, if OWNER is performing the additional work with OWNER's employees) proper and safe access to the site and a reasonable opportunity for the introduction and storage of materials and equipment and the execution of such work, and shall properly connect and coordinate work performed by others with their WORK as described in these Contract Documents.

6.8.5 CONTRACTOR shall do all cutting, fitting and patching of the WORK that may be required to make its several parts come together properly and integrate with such other work.

6.8.6 CONTRACTOR shall not endanger any work of others by cutting, excavating or otherwise altering their work and will only cut or alter their work with the written consent of OWNER and the others whose work will be affected.

6.9 COORDINATION WITH SUBCONTRACTORS AND SUPPLIERS

6.9.1 CONTRACTOR shall be solely responsible for scheduling and coordinating the WORK of Subcontractors, Suppliers and other persons and organizations performing or furnishing any of the WORK under a direct or indirect contract with CONTRACTOR. CONTRACTOR shall require all Subcontractors, Suppliers and such other persons and organizations performing or furnishing any of the WORK to communicate with OWNER through CONTRACTOR. All WPRL performed by a Subcontractor or Supplier will be pursuant to an appropriate agreement between CONTRACTOR and the Subcontractor or Supplier which specifically binds the Subcontractor or Supplier to the applicable terms and conditions of the Contract Documents.

6.9.2 Subcontractor has no contractual relationship with OWNER. Nothing contained in this Article shall create any contractual relationship between any Subcontractor and OWNER or OWNER, nor relieve CONTRACTOR of any liability or obligation under the Agreement. CONTRACTOR shall include these General Conditions and the Supplementary General Conditions as a part of all its subcontract agreements.

6.9.3 DIVISION OF WORK - The divisions and sections of the Specifications and the identifications of any Drawings shall not control CONTRACTOR in dividing the WORK among Subcontractors or Suppliers or delineating the WORK to be performed by any specific trade.

6.10 PATENT FEES AND ROYALTIES - CONTRACTOR shall pay all license fees and royalties and assume all costs incident to the use in the performance of the WORK or the incorporation in the WORK of any invention, design, process, product or device which is the subject of patent rights or copyrights held by others. If a particular invention, design, process, product or device is specified in the Contract Documents for use in the performance of the WORK and if to the actual knowledge of OWNER, or OWNER, its use is subject to patent rights or copyrights calling for the payment of any license fee or royalty to others, the existence of such rights shall be disclosed by OWNER in the Contract Documents.

6.11 PERMITS - Unless otherwise provided in the Supplementary General Conditions, CONTRACTOR shall obtain and pay for all construction permits and licenses from the agencies having jurisdiction, including the furnishing of insurance and Bonds if required by such agencies. The enforcement of such requirements under this Agreement shall not be made the basis for claims for additional compensation. OWNER shall assist CONTRACTOR, only when necessary, in obtaining such permits and licenses. CONTRACTOR shall pay all governmental charges and inspection fees necessary for the prosecution of the WORK, which are applicable at the time of opening of Bids. CONTRACTOR shall pay all charges of utility owners for connections to the WORK.

6.12 LAWS AND REGULATIONS - CONTRACTOR shall observe and comply with all Federal, State and local laws, ordinances, Codes, orders and regulations which in any manner affect those engaged or employed on the WORK, the materials used in the WORK or the conduct of the WORK. If any discrepancy or inconsistency should be discovered in this Agreement in relation to any such law, ordinance, code, order or regulation, CONTRACTOR shall immediately report the same in writing to OWNER.

6.13 TAXES - CONTRACTOR shall pay all sales, consumer, use and other similar taxes required to be paid in accordance with the Laws and Regulations of the place of the Project which are applicable during the performance of the WORK. OWNER is not exempt from sales tax.

6.14 Intentionally Omitted.

6.15 USE OF PREMISES

6.15.1 General - CONTRACTOR shall confine construction equipment, the storage of materials and equipment and the operations of workers to the Project site, the land and areas identified in and permitted by the Contract Documents and the other land and areas permitted by Laws and Regulations, rights-of-way, permits and easements as approved by OWNER. CONTRACTOR shall assume full responsibility for any damage to any such land or area, or to the owner or occupant thereof or of any land or areas contiguous thereto, resulting from the performance of the WORK. Should any claim be made against OWNER or OWNER by any such owner or occupant

because of the performance of the WORK, CONTRACTOR shall promptly attempt to settle with such other party by agreement or otherwise resolve the claim through litigation.

6.16 PROJECT SITE MAINTENANCE AND INTERFERENCE WITH ADJACENT PROPERTY

6.16.1 Cost of General Requirements in Contract Price - CONTRACTOR is obligated to comply with the General Requirements. All costs associated with this compliance are to be included in the basic Contract Price.

6.16.2 Vehicle Load Limits - When materials are transported in prosecuting the WORK, vehicles shall not be loaded beyond the loading capacity recommended by the manufacturer of the vehicle or prescribed by law or regulation. When it is necessary to cross curbs, sidewalks or drainage facilities CONTRACTOR shall protect them from damage.

6.16.3 Work Outside The Agreement Limits - Despite the designation of Contract Documents or the indication of temporary fences or barricades, the provisions of the Contract Documents governing certain portions of the WORK may require that certain operations be carried out beyond such limits. In those cases, trenching, utility work, site development and landscaping shall be scheduled so as to occasion a minimum of inconvenience or disturbance to or interference with the normal operation of the owner, abutters and the public. CONTRACTOR shall obtain OWNER's prior approval and all necessary approvals from other agencies, public entities or the government for such operations, and prosecute such operations expeditiously and restore the premises affected to their original condition immediately upon completion of such operations, unless otherwise specified in the Contract Documents. All existing walks, roadways, paved or landscaped areas on which temporary driveways or walks are rerouted shall be restored to their original condition, immediately upon completion of those phases of the WORK, unless otherwise specified in the Contract Documents. Pumping, draining and control of surface and ground water shall be carried out so as to avoid endangering the WORK or any adjacent facility or property, or interrupting, restricting or otherwise infringing or interfering with its use.

6.16.4 Responsibilities For Damage - All damage, injury or loss to any persons or property caused, directly or indirectly, in whole or in part, by CONTRACTOR, any Subcontractor, Supplier or any other person or organization directly or indirectly employed by any of them to perform or furnish any of the WORK or anyone for whose acts any of them may be liable, shall be remedied by CONTRACTOR (except damage or loss attributable to the fault of Drawings or Specifications or to the acts or omissions of OWNER or OWNER or OWNER). CONTRACTOR's duties and responsibilities for Safety and for protection of the WORK shall continue until such time as all the WORK is completed and OWNER has issued a notice to OWNER and CONTRACTOR in accordance with Article 14 that the WORK is complete.

6.17 CONTRACTOR'S DAILY REPORTS - CONTRACTOR shall complete a daily report indicating his total manpower for each construction trade, major equipment on site, each Subcontractor's manpower, weather conditions and any other items required by OWNER. The daily report shall be completed on forms provided by OWNER and shall be submitted to OWNER by 9:00 a.m. the following work Day. The report should comment on the daily progress and status

of the work within each major component of the WORK. These components will be determined by OWNER. Submitting acceptable daily reports as required is a precondition to approval of the monthly progress payment. However, these reports are not to be used to meet the notice requirements contained elsewhere in the General Conditions.

6.18 SAFETY

6.18.1 Safety Plan - CONTRACTOR will be required to comply with General Requirements provided by OWNER. CONTRACTOR shall submit a written Safety plan to OWNER prior to commencement of any work on site. CONTRACTOR shall be responsible for initiating, maintaining and supervising all Safety precautions and programs in connection with the WORK.

6.18.2 Safety Laws and Regulations - CONTRACTOR shall comply with all applicable Laws and Regulations of any public body having jurisdiction for the Safety of persons or property or to protect them from damage, injury or loss and shall erect and maintain all necessary safeguards for such Safety and protection. CONTRACTOR shall notify owners of adjacent property and of Underground Utilities when prosecution of the WORK may affect them and shall cooperate with them in the protection, removal, relocation and replacement of their property.

6.18.3 Safety Representative - CONTRACTOR shall designate a qualified and experienced Safety representative at the site whose duties and responsibilities shall be the prevention of accidents and the maintaining and supervising of Safety precautions and program. The Safety representative must meet the requirements stated in Supplemental General Conditions 6.18 "Safety."

6.18.4 Safety Orders - CONTRACTOR shall have at the WORK site as applicable, copies or suitable extracts of: Construction Safety Orders, Tunnel Safety Orders and General Industry Safety Orders issued by the State Division of Industrial Safety. CONTRACTOR shall comply with provisions of these and all other applicable laws, ordinances and regulations.

6.18.5 Trench Shoring Plan - Before excavating any trench five (5) feet or more in depth, CONTRACTOR shall submit to OWNER a detailed plan showing the design of shoring, bracing, sloping or other provisions to be made for the workers' protection from the hazard of caving ground during the excavation of such trench. If the plan varies from the shoring system standards, the plan shall be prepared by a California registered civil OWNER. No excavation shall start until OWNER has accepted the plan and CONTRACTOR has obtained a permit from the State Division of Industrial Safety. A copy of the permit shall be submitted to OWNER and posted at the site.

6.18.6 Use of Explosives - Explosives may be used only when authorized in writing by OWNER, or as otherwise stated in the Specifications. Explosives shall be handled, used and stored in accordance with all applicable regulations. OWNER's approval of the use of explosives shall not relieve CONTRACTOR from liability for claims caused by blasting operations.

6.18.7 Hazardous Communication Program

6.18.7.1 Notification to employees is required when materials that contain hazardous substances or mixtures are required on the WORK. A material safety data sheet as described in section 5194 of the California Code of Regulations shall be requested by CONTRACTOR from the manufacturer of any hazardous product used.

6.18.7.2 Material usage shall be accomplished with strict adherence to California Division of Industrial Safety requirements and all manufacturer's warnings and application instructions listed on the material safety data sheet and on the product container label.

6.18.7.3 CONTRACTOR shall be responsible for coordinating any exchange of material safety data sheets or other hazard communication information required to be made available to or exchanged between or among employers at the site in accordance with laws or regulations, with copies to OWNER.

6.18.7.4 Unsafe Products - CONTRACTOR shall notify OWNER if it considers a specified or required product or its intended usage to be unsafe. This notification must be given to OWNER prior to the product being ordered, or if provided by some other party, prior to the product being used or incorporated in the WORK.

6.18.8 Safety Measures In Bid - Payment for performing all work necessary to provide Safety measures shall be included in the prices bid for other items of work except where separate bid items for excavation Safety are provided.

6.18.9 Safety Reporting

6.18.9.1 Weekly First Aid Logs - This log should be delivered to OWNER three (3) Days after the weekly reporting period.

6.18.9.2 Accident and Injury Reports - This report should be delivered within twenty-four (24) hours of the injury or accident.

6.18.10 OWNER Safety Deficiency Report - CONTRACTOR is required to respond to this report within two (2) working Days explaining his corrective action and proposed schedule for this action.

6.19 EMERGENCY - In emergencies affecting the Safety or protection of persons or the WORK or property at or adjacent to the site, CONTRACTOR, without special instruction or authorization from OWNER, is obligated to act to prevent threatened damage, injury or loss. CONTRACTOR shall give OWNER prompt written notice if CONTRACTOR believes that any significant changes in the WORK have resulted because of the action taken in response to an emergency. If it is determined by OWNER that a change is required, a change shall be authorized by Change Order.

6.20 SHOP DRAWINGS AND SAMPLES

6.20.1 After checking and verifying all field measurements and after complying with applicable procedures specified in the General Requirements, CONTRACTOR shall submit to OWNER for

OWNER's review all Shop Drawings in accordance with the accepted schedule of Shop Drawings Submittals specified in Bidding Documents section Bid Forms.

6.20.2 CONTRACTOR shall also submit to OWNER for review all Samples in accordance with the accepted schedule of sample Submittals specified in the General Requirements.

6.20.3 Before submittal of each Shop Drawing or Sample, CONTRACTOR shall have determined and verified all quantities, dimensions, specified performance criteria, installation requirements, materials, catalog numbers and similar data with respect thereto and reviewed or coordinated each Shop Drawing or Sample with other Shop Drawings and Samples and with the requirements of the WORK and the Contract Documents.

6.20.4 CONTRACTOR shall, at his own expense, furnish for review, and obtain approval by the OWNER, three (3) copies each of detailed submittals for materials, installation drawings, and construction procedures for the following:

- Any material which differ from that specified with a brand name on the Plans and in this Special Provisions
- Portland cement concrete design mix
- Pre-Cast Concrete Structures and appurtenances
- Trench Covers
- Grates
- Crushed Rock and Stone
- Electrical and Communication material
- Conduit
- Pipe
- Marking Tape
- Pre-Engineered Buildings and appurtenances
- Valve Can, Lid and/or material pertaining to the adjustment
- Additional submittals as mentioned in the Technical Specifications

In addition, OWNER's representative may, at his discretion, require shop drawings on other equipment or construction activities not included in the above list. OWNER's representative shall have ten (10) working days to review and return the shop drawings to CONTRACTOR after receipt of said drawings.

6.21 SUBMITTAL ACCEPTANCE

6.21.1 OWNER Review Scope and Limitation - OWNER will review and approve Shop Drawings and Samples. OWNER's review and approval will be only to determine if the items covered by the Submittals will, after installation or incorporation in the WORK, conform to the information given in the Contract Documents and be compatible with the design concept of the completed Project as a functioning whole as indicated by the Contract Documents. OWNER's review and approval will not extend to means, methods, techniques, sequences or procedures of construction except where a particular means, method, technique, sequence or procedure of

construction is specifically and expressly called for by the Contract Documents or to Safety precautions or programs incident thereto. The review and approval of a separate item as such will not indicate approval of the assembly in which the item functions. CONTRACTOR shall make corrections required by OWNER, and shall return the required number of corrected copies of Shop Drawings and submit as required new Samples for review and approval. CONTRACTOR shall direct specific attention in writing to revisions other than the corrections called for by OWNER on previous Submittals.

6.21.2 CONTRACTOR's Responsibility Not Relieved By Approval - OWNER's and OWNER's review and approval of Shop Drawings or Samples shall not relieve CONTRACTOR from responsibility for any variation from the requirements of the Contract Documents unless CONTRACTOR has in writing called OWNER's attention to each such variation at the time of submission and OWNER has given written approval of each such variation by specific written notation thereof incorporated in or accompanying the Shop Drawing or Sample approval; nor will any approval by OWNER relieve CONTRACTOR from responsibility for complying with the requirements of Article 6.

6.22 COMPLIANCE WITH OWNER ADMINISTRATIVE PROCEDURES - CONTRACTOR is required to comply with all OWNER administrative procedures including but not limited to daily reports, Requests for Proposal, Safety reporting, notice requirements, payment procedures, submittal processing, attendance at weekly and special meetings and others designated by OWNER.

6.23 ASSIGNMENT OF CONTRACT - CONTRACTOR shall not assign, sublet, sell, transfer or otherwise dispose of the Contract Documents or any portion thereof, or its right, title or interest therein, or obligations thereunder, without the written consent of OWNER except as imposed by law. If CONTRACTOR violates this provision, the Agreement may be terminated at the option of OWNER. In such event, OWNER shall be relieved of all liability and obligations to CONTRACTOR and to its assignee or transferee growing out of such termination.

6.24 CONTINUING THE WORK DURING DISPUTES

6.24.1 CONTRACTOR shall carry on the WORK and adhere to the progress schedule during all disputes or disagreements with OWNER over any WORK scope, price or time dispute. No work shall be delayed or postponed pending resolution of any disputes or disagreements, except as CONTRACTOR and OWNER may otherwise agree in writing.

6.24.2 If CONTRACTOR and OWNER are unable to reach agreement on Disputed Work, OWNER may direct CONTRACTOR to proceed with the WORK. Payment shall be as later determined by Article 16.

6.25 GENERAL WARRANTY AND GUARANTEE CONTRACTOR is responsible for providing warranty and guarantee in accordance with Article 13.

6.26.11 Survival of Obligations - All representations, indemnifications, warranties and guarantees made in, required by or given in accordance with the Contract Documents, as well as

all continuing obligations indicated in the Contract Documents, will survive Final Payment, completion and acceptance of the WORK and termination or completion of the Agreement.

ARTICLE 7 -- WORK BY OTHERS AT THE SITE

7.1 OWNER'S RIGHT TO WORK AT SITE - OWNER may perform other work related to the Project at the site by OWNER's own forces, have other work performed by utility owners, or let other direct contracts which may contain General Conditions similar to these. If the fact that such other work is to be performed was not noted in the Contract Documents, written notice thereof will be given to CONTRACTOR prior to starting any such other work.

7.2 CONTRACTOR REPORT ON DELAYS CAUSED BY OTHERS - If the proper execution or results of any part of CONTRACTOR's work depends upon the work of any such other contractor or utility owner (or OWNER), CONTRACTOR shall promptly inspect and report to OWNER in writing any apparent delays, defects or deficiencies in such other work that render it unavailable or unsuitable for such proper execution and results. CONTRACTOR's failure to report such delays, defects or deficiencies in writing before commencement of the affected WORK will constitute an acceptance of the other work as fit and proper for integration with CONTRACTOR's work except for latent defects and deficiencies in the other work.

7.3 DAMAGE TO OTHERS CAUSED BY CONTRACTOR - If CONTRACTOR causes damage to the work, property or person of any other contractor employed by OWNER, or if any claim arising out of CONTRACTOR's performance of the WORK by any other contractor is made against CONTRACTOR, by OWNER, OWNER, OWNER, any other contractor or any other person, CONTRACTOR shall be responsible to settle and shall promptly attempt to settle and resolve the dispute.

7.4 COORDINATION

7.4.1 Coordination Responsibilities - CONTRACTOR's coordination responsibilities are in accordance with those found in Article 6 and in the described Supplementary General Conditions if applicable.

7.4.2 Coordination Delays - Should CONTRACTOR be delayed by OWNER, and such delay could not reasonably have been foreseen and prevented by CONTRACTOR, OWNER will determine the extent of the delay, the effect of the delay on the work as a whole, and any commensurate extension of time. OWNER shall arrange meetings with other contractors performing work on behalf of OWNER to plan coordination of construction activities. Any difference or conflict arising between CONTRACTOR and any other contractor employed by OWNER shall be submitted to OWNER for a decision in the matter. CONTRACTOR shall comply with reasonable direction from OWNER whose decision on coordination matters will be final.

7.5 Remedy For Delays By Others - By entering into this Agreement, CONTRACTOR acknowledges that there may be other contractors on the site whose WORK will be coordinated with that of his own. CONTRACTOR expressly warrants and agrees that he will cooperate with other contractors and will do nothing to delay, hinder or interfere with the WORK of other separate

contractors, OWNER, OWNER or OWNER. CONTRACTOR also expressly agrees that, in the event his work is hindered, delayed, interfered with or otherwise affected by a separate contractor, his sole remedy will be a direct action against the separate contractor. CONTRACTOR will have no remedy, and hereby expressly waives any remedy, against OWNER and/or OWNER or OWNER on account of delay, hindrance, interference or other event caused by a separate contractor.

7.6 Out Of Sequence Or Accelerated Work - When WORK is performed out of sequence and ahead of Interfacing Work, CONTRACTOR shall be responsible for taking reasonable steps to minimize damage or loss to the WORK which may be caused by others during the performance of their work, including but not limited to furnishing prompt written notice to OWNER and to the other contractors that WORK has been performed out of sequence and ahead of Interfacing Work.

7.7 NATIONAL LABOR RELATIONS BOARD REQUIREMENTS - CONTRACTOR's Price shall include all costs associated with complying with National Labor Relations Board requirements for accessing the Project site.

ARTICLE 8 -- OWNER'S RESPONSIBILITIES

8.1 GENERAL - OWNER has the final authority in all matters affecting the WORK.

8.2 COMMUNICATIONS - In general, OWNER and OWNER shall issue all written communications to CONTRACTOR through OWNER.

8.3 PAYMENTS - OWNER shall make payments to CONTRACTOR as provided in Article 14.

8.4 LANDS, EASEMENTS AND SURVEYS - OWNER's duties in respect to providing lands and easements and providing engineering surveys to establish reference points are set forth in Article 4. OWNER shall identify and make available to CONTRACTOR copies of reports of explorations and tests of subsurface conditions at the site and in existing structures which have been utilized in preparing the Contract Documents as set forth in Article 4.

8.5 CHANGE ORDERS - OWNER shall execute Change Orders as indicated in Article 10.

8.6 INSPECTIONS AND TESTS - OWNER's responsibility with respect to inspections, tests and approvals is set forth in Article 13.

8.7 SUSPENSION OF WORK - In connection with OWNER's right to stop work or suspend work, see Articles 13 and 15.

8.8 TERMINATION OF AGREEMENT - Article 15 deals with OWNER's right to terminate services of CONTRACTOR.

8.9 OWNER'S RESPONSIBILITY FOR UNDISCLOSED HAZARDOUS MATERIALS - OWNER'S responsibility with respect to undisclosed Asbestos, PCBs, Petroleum, Hazardous Waste or Radioactive Materials uncovered or revealed at the site is set forth in Article 4.

8.10 NO OWNER SUPERVISION INTENDED - Neither OWNER nor OWNER shall supervise, direct or have control or authority over, nor be responsible for, CONTRACTOR's means, methods, techniques, sequences or procedures of construction or the Safety precautions and programs incident thereto, or for any failure of CONTRACTOR to comply with Laws and Regulations applicable to the furnishing or performance of the WORK. OWNER and OWNER will not be responsible for CONTRACTOR's failure to perform or furnish the WORK in accordance with the Contract Documents.

ARTICLE 9 -- OWNER'S STATUS DURING CONSTRUCTION

9.1 GENERAL

9.1.1 OWNER'S REPRESENTATIVE - OWNER will be OWNER's representative during the construction period. The duties and responsibilities and the authority of OWNER as OWNER during construction are set forth in the Contract Documents.

9.1.2 Contract Documents Terms - Whenever in the Contract Documents the terms "as ordered," "as directed," "as required," "as allowed," "as reviewed," "as approved," or terms of like effect or import are used, or the adjectives "reasonable," "suitable," "acceptable," "proper," or "satisfactory" or adjectives of like effect or import are used to describe a requirement, direction, review or judgment of OWNER as to the WORK, it is intended that such requirement, direction, review or judgment will be solely to evaluate the WORK for compliance with the requirements of the Contract Documents, and conformance with the design concept of the completed Project as a functioning whole as indicated by the Contract Documents, unless there is a specific statement indicating otherwise. The use of any such term or adjective shall not be effective to assign to OWNER any duty or authority to supervise or direct the performance of the WORK or any duty or authority to undertake responsibility contrary to the Article 9.

9.2 PRESENCE ON SITE - OWNER will be on site during construction to observe the progress, quantity and quality of the WORK and to determine, in general, if the WORK is proceeding in accordance with the Contract Documents. OWNER will not supervise, direct or have control over CONTRACTOR's work.

9.3 CONTRACT DOCUMENT CLARIFICATIONS AND INTERPRETATIONS - OWNER will issue with reasonable promptness such written clarifications or interpretations of the requirements of the Contract Documents (in the form of Drawings or otherwise) as OWNER may determine necessary, which shall be consistent with or reasonably inferable from the overall intent of the Contract Documents. Such written clarifications and interpretations will be binding on OWNER and CONTRACTOR. If CONTRACTOR believes that a written clarification or interpretation justifies an adjustment in the Contract Price or the Contract Time and the parties are unable to agree to the amount or extent CONTRACTOR may request an adjustment in the Contract Price or an extension of the Contract Time therefore as provided in Articles 11 or 12.

9.4 AUTHORIZED VARIATIONS IN WORK - OWNER may authorize minor variations in the WORK, (not resulting in changes to the Contract Price or Contract Time), which are consistent

with the intent of the Contract Documents. These may be accomplished by a OWNER Order. If CONTRACTOR believes that a OWNER Order justifies an increase in the Contract Price or an extension of the Contract Time, CONTRACTOR may request an adjustment in the Contract Price or an extension of the Contract Time therefore as provided in Articles 11 or 12. If CONTRACTOR proceeds with the directed work without making such a request or providing notice he will be presumed to be in agreement with OWNER's determination that no change in price or time are involved, and will be considered to have waived his right to request an adjustment in Contract Time or Price.

9.5 ACCEPTANCE OF WORK - OWNER has the final authority in all matters affecting the WORK. Within the scope of the Agreement, OWNER has the authority to enforce compliance with the Plans and Specifications. CONTRACTOR shall promptly comply with instructions from OWNER or any authorized representative on all matters relating to quantities, the acceptability of material, equipment or work, the execution, progress or sequence of work and the interpretation of Specifications or Drawings. The decision of OWNER shall be precedent to any payment under the Agreement, unless otherwise ordered by OWNER. OWNER will recommend final acceptance to OWNER.

9.6 REJECTING DEFECTIVE WORK - OWNER will have authority to reject work which OWNER determines to be defective, or not in compliance with the Contract Documents or that OWNER or OWNER believes will not produce a completed Project or that will prejudice the integrity of the design concept of the completed Project as a functioning whole as indicated by the Contract Documents. OWNER will also have authority to require special inspection or testing of the WORK as provided in Article 13, whether or not the WORK is fabricated, installed or completed.

9.7 CONTRACTOR SUBMITTALS - CONTRACTOR shall provide submittals in accordance with the SPECIAL PROVISIONS.

9.8 CHANGE ORDER - In connection with OWNER's responsibilities as to Change Orders, see Articles 10, 11, and 12.

9.9 PAYMENTS In connection with OWNER's responsibility as to Applications for Payment, see Article 14.

9.10 FINAL APPLICATION FOR PAYMENT - OWNER's review of the Final Application for Payment and accompanying documentation and all maintenance and operating instructions, schedules, guarantees, Bonds and certificates of inspection, tests and approvals and other documentation required to be delivered by Article 14 will only be to determine generally that their content complies with the requirements of, and in the case of certificates of inspections, tests and approvals that the results certified indicate compliance with the Contract Documents.

9.11 DECISIONS ON DISPUTES

9.11.1 Interpreter Of Contract Documents - OWNER will be the initial interpreter of the requirements of the Contract Documents and judge of the acceptability of the WORK thereunder. Claims, disputes and other matters relating to the acceptability of the WORK, the interpretation of the requirements of the Contract Documents pertaining to the performance of the WORK and those claims with respect to changes in the Contract Price or Contract Time will be referred initially to OWNER. The process to be followed is described in Article 16.

9.12 OWNER LIABILITY FOR INTERPRETATION - When functioning as interpreter under Article 9, OWNER will not show partiality to OWNER, OWNER or CONTRACTOR and will not be liable in connection with any interpretation or decision rendered in good faith in such capacity. The rendering of a decision by OWNER pursuant to Article 9 will be a condition precedent to any exercise by CONTRACTOR of such rights or remedies as he may otherwise have under the Contract Documents or by laws or regulations in respect of any such Claim, dispute or other matter pursuant to Article 16.

9.13 LIMITATION ON OWNER'S RESPONSIBILITIES

9.13.1 No Duty Arising Out Of Act Or Decision - Neither OWNER's authority to act under this Article 9 or other provisions of the Contract Documents, nor any decision made by OWNER in good faith either to exercise or not exercise such authority shall give rise to any duty or responsibility of OWNER to CONTRACTOR, any Subcontractor, any Supplier, any surety for any of them or any other person or organization performing any of the WORK.

9.13.2 No Supervision Role - OWNER will not supervise, direct, control or have authority over or be responsible for CONTRACTOR's means, methods, techniques, sequences or procedures of construction, or the Safety precautions and programs incident thereto, or for any failure of CONTRACTOR to comply with Laws and Regulations, applicable to the performance of the WORK. OWNER will not be responsible for CONTRACTOR's failure to perform the WORK in accordance with the Contract Documents.

9.13.3 CONTRACTOR Acts Or Omissions - OWNER will not be responsible for the acts or omissions of CONTRACTOR nor of any Subcontractor, Supplier or any other person or organization performing any of the WORK.

ARTICLE 10 -- CHANGES IN THE WORK

10.1 CHANGES REQUESTED BY CONTRACTOR

10.1.1 OWNER Approval - Changes in the Plans and Specifications, requested in writing by CONTRACTOR, which do not materially affect the WORK and which are not detrimental to the WORK or to the interests of OWNER, may be granted to facilitate the WORK, when approved in writing by OWNER. If the method will result in a cost saving, an appropriate deductive change will be required.

10.1.2 Specified Methods - Changes in specified methods of construction may be made at CONTRACTOR's request when approved in writing by OWNER. If the method will result in a cost saving, an appropriate deductive change will be required.

10.1.3 No Right To Change - Nothing herein shall be construed as granting a right to CONTRACTOR to demand acceptance of such changes.

10.1.4 Request for Change Made in Good Faith - The request For change shall be made in good faith, and the amount requested accurately reflects the adjustments in Contract Price or Contract Time for which CONTRACTOR believes OWNER is liable, and covers all direct, supplemental, indirect, consequential, serial and cumulative costs and delays to which CONTRACTOR is entitled as a result of the change.

10.2 OWNER'S RIGHT TO MODIFY WORK

10.2.1 Requirement To Implement Directed Change - Without invalidating the Agreement and without notice to any surety, OWNER may at any time or from time to time, order additions, deletions or revisions in the WORK; these will be authorized by a written Change Order prepared by OWNER and issued by OWNER. Upon receipt of any such document, CONTRACTOR shall promptly proceed with the work involved which will be performed under the applicable conditions of the Contract Documents (except as otherwise specifically provided).

10.2.2 Request For Proposal - When OWNER desires a change in the WORK, OWNER will issue a Request for Proposal to CONTRACTOR. CONTRACTOR will be required to respond within the time indicated by OWNER or fifteen (15) Days, whichever is less. If CONTRACTOR fails to meet the submittal time required by this provision, CONTRACTOR will be solely liable for any delays or impacts caused by the delayed submittal of the proposal.

10.3 REQUIREMENT TO PROCEED WITH WORK - If OWNER and CONTRACTOR agree on the value of any work, and the amount of Contract Time that should be allowed as a result of CONTRACTOR's response to a Request for Proposal, CONTRACTOR shall proceed as directed by OWNER so as to minimize the impact on and delays to the work pending the issuance of a Change Order. If however, OWNER and CONTRACTOR are unable to agree as to the extent of an increase or decrease in the Contract Price or an extension or shortening of the Contract Time that should be allowed as a result of CONTRACTOR's response to a Request for Proposal, OWNER can direct CONTRACTOR to proceed on the basis of a price for the WORK as estimated by OWNER or time and materials so as to minimize the impact on and delays to the work, in accordance with Article 11.

10.4 WORK NOT IN CONTRACT - CONTRACTOR shall not be entitled to an increase in the Contract Price nor an extension of the Contract Time with respect to any work performed that is not required by the Contract Documents as amended, modified, supplemented by Change Order or Field Order, except in the case of an emergency and except in the case of uncovering work as provided in Article 13.

10.5 CHANGE ORDER PROCESS - OWNER and CONTRACTOR shall execute appropriate Change Orders covering:

10.5.1 OWNER Ordered Changes - Changes in the WORK which are ordered by OWNER pursuant to Article 10;

10.5.2 Changes Due To Defective Work - changes required because of acceptance of Defective Work under Article 13;

10.5.3 Mutually Agreed Price/Time Changes - changes in the Contract Price or Contract Time which are agreed to by the parties.

10.6 NOTICE TO SURETY - If notice of any change is required by the provisions of any Bond to be given to a surety, the giving of any such notice will be CONTRACTOR's responsibility, and the amount of each applicable Bond shall be adjusted accordingly.

10.7 ALLOWABLE QUANTITY VARIATIONS - In the event of an increase or decrease in bid item quantity of a unit priced item in the Contract Documents, the total amount of WORK actually done or materials or equipment furnished shall be paid for according to the unit price established for such work under the Contract Documents, wherever such unit price has been established; provided, that an adjustment in the unit price may be made for changes which result in an increase or decrease in excess of the allowable percentage variations as set forth by the Contract Documents.

ARTICLE 11 -- CHANGE OF CONTRACT PRICE (Change Orders, Field Orders and Work Orders)

11.1 CONTRACT PRICE CHANGE - The Contract Price may only be changed by a written Change Order.

11.2 METHODS FOR DETERMINING ADJUSTMENTS IN CONTRACT PRICE

11.2.1 Methods - The methods to be used to determine an adjustment in Contract Price necessitated by changes ordered or negotiated pursuant to these General Conditions or work covered by a Request for Proposal are limited to the following:

11.2.1.1 Where the work involved is covered by lump sum prices in the Contract Documents: on the basis of a lump sum negotiation;

11.2.1.2 Where the work involved is covered or is of the same character as Unit Price Work: by application of those unit prices to the quantities of the items involved (subject to the provisions covering Unit Price Work);

11.2.1.3 Where the work involved is not covered by either of the preceding methods: by mutual acceptance of a lump sum price negotiated on the basis of CONTRACTOR's itemized estimate of

the anticipated Cost of the WORK involved, determined as specified in this Article, and a contractor's fee as provided in this Article;

11.2.1.4 Where the work involved is not covered by either of the first two (2) methods, and OWNER and CONTRACTOR cannot achieve agreement on the anticipated cost of the work involved and OWNER directs CONTRACTOR to proceed with the work with payments to be made on the basis of OWNER's determination of the cost of the work involved: on a CONTRACTOR's profit of eighty (80) percent of the amount allowed by this Article;

11.2.1.5 Where the work involved is not covered by either of the first two (2) methods, and OWNER directs CONTRACTOR to proceed with the work involved with payments to be made on the basis of actual costs: on the basis of the actual cost of the work involved, determined as specified in this Article, and a CONTRACTOR's profit determined as fifty (50) percent of the amount allowed under this Article.

11.2.1.6 Where the work involved is not covered by any of the preceding methods, and when payment is to be determined by a court of competent jurisdiction, it is agreed that the actual cost method used for actual cost basis work shall be an appropriate method for determining the cost of the work involved.

11.2.2 CONTRACTOR'S Overhead and Profit Limitation - For all negotiated Change Orders the allowance for overhead and profit shall include full compensation for superintendence, insurance premiums, taxes, field office expense, extended overhead, home office overhead and all other items of expense or cost not included in the cost of labor, materials or equipment provided for in this Article. The allowance for overhead and profit will not exceed the following schedule:

	Overhead	**Profit**
Labor =	**Ten (10) percent**	**Ten (10) percent**
Materials =	**Ten (10) percent**	**Five (5) percent**
Equipment =	**Ten (10) percent**	**Five (5) percent**

To the sum of the costs and markups provided for in this Article, one (1) percent shall be added as compensation for bonding.

11.2.3 Subcontractor Mark Up - It is understood that labor, materials and equipment may be furnished by CONTRACTOR or by the Subcontractor on behalf of CONTRACTOR. When all or any part of the extra work is performed by a Subcontractor, the allowance specified herein shall be applied to the labor, materials and equipment costs of the Subcontractor, to which CONTRACTOR may add five (5) percent of the Subcontractor's total cost for the extra work. Regardless of the number of hierarchical tiers of Subcontractors, the five (5) percent increase above the performing Subcontractor's total cost which includes the allowances for overhead and profit may be applied one (1) time only.

11.2.4 Equipment Rental Rates

11.2.4.1 All equipment rental rates shall be in accordance with the rental rate source identified in the Supplementary General Conditions based on a monthly rate for the equipment, and based on an equipment utilization of one hundred seventy-three (173) hours per month. CONTRACTOR will be permitted to charge only for the hours the equipment is actually used in the changed work.

11.2.4.2 Equipment Required Specifically for the Additional Work - Whenever possible, changed work will be accomplished using equipment available on-site or owned by CONTRACTOR. If no on-site equipment can be used, and a specific piece of equipment must be rented to be used exclusively for the changed work, the rental rate will be the invoiced rate.

11.3 COST OF WORK (BASED ON TIME AND MATERIALS)

11.3.1 General - The term "cost of work" means the sum of all costs necessarily incurred and paid by CONTRACTOR for labor, materials and equipment in the proper performance of extra work. Except as otherwise may be agreed to in writing by OWNER, such costs shall be in amounts no higher than those prevailing in the locality of the Project, shall include only the following items and shall not include any of the excluded costs itemized in this Article.

11.3.2 Labor - The costs of labor will be the actual cost substantiated by certified payroll for wages prevailing for each craft or type of workers performing the extra work at the time the extra work is done, plus employer payments of payroll taxes, Workers' Compensation insurance, liability insurance, health and welfare, pension, vacation, apprenticeship funds and other direct costs resulting from Federal, State or local laws, as well as assessments or benefits required by lawful collective bargaining agreements. Labor costs for equipment operators and helpers shall be paid only when such costs are not included in the invoice for equipment rental. The labor costs for foremen shall be proportioned to all of their assigned work and only that applicable to extra work shall be paid. Nondirect labor costs including the superintendent, Project manager and other labor identified in 11.3.7.1 shall be considered part of the overhead markup identified in this Article.

11.3.3 Materials - The cost of materials reported shall be itemized at invoice or lowest current price at which materials are locally available and delivered to the job in the quantities involved, plus the cost of sales tax, freight, delivery and storage.

11.3.3.1 Trade discounts available to the purchaser shall be credited to OWNER notwithstanding the fact that such discounts may not have been taken by CONTRACTOR.

11.3.3.2 For materials secured by other than a direct purchase and direct billing to the purchaser, the cost shall be deemed to be the price paid to the actual supplier as determined by OWNER.

11.3.3.3 Payment for materials from sources owned wholly or in part by the purchaser shall not exceed the price paid by the purchaser for similar materials from said sources on extra work items or the current wholesale price for such materials delivered to the work site, whichever price is lower.

11.3.3.4 If in the opinion of OWNER the cost of material is excessive, or CONTRACTOR does not furnish satisfactory evidence of the cost of such material, then the cost shall be deemed to be the lowest current wholesale price for the total quantity concerned delivered to the work site less trade discount.

11.3.3.5 OWNER reserves the right to furnish materials for the extra work and no claim shall be allowed by CONTRACTOR for costs and profit on such materials.

11.3.4 Equipment - CONTRACTOR will be paid for the use of equipment at the rental rate listed for such equipment specified in the Supplementary General Conditions. Such rental rate will be used to compute payments for equipment whether the equipment is under CONTRACTOR's control through direct ownership, leasing, renting or another method of acquisition. The rental rate to be applied for use of each item of equipment shall be the rate resulting in the least total cost to OWNER for the total period of use. If it is deemed necessary by CONTRACTOR to use equipment not listed in the publication specified in the Supplementary General Conditions, an equitable rental rate for the equipment will be established by OWNER. CONTRACTOR may furnish cost data which might assist OWNER in the establishment of the rental rate.

11.3.4.1 All equipment shall, in the opinion of OWNER, be in good working condition and suitable for the purpose for which the equipment is to be used.

11.3.4.2 Before construction equipment is used on the extra work, CONTRACTOR shall plainly stencil or stamp an identifying number thereon at a conspicuous location, and shall furnish to OWNER, in duplicate, a description of the equipment and its identifying number and the scheduled work activities planned.

11.3.4.3 Unless otherwise specified, manufacturer's ratings and manufacturer-approved modifications shall be used to classify equipment for the determination of applicable rental rates. Equipment which has no direct power unit shall be powered by a unit of at least the minimum rating recommended by the manufacturer.

11.3.5 Rental Equipment

11.3.5.1 The rental time to be paid for equipment on the work site shall be the time the equipment is in productive operation on the extra work being performed and, in addition, shall include the time required to move the equipment to the location of the extra work and return it to the original location or to another location requiring no more time than that required to return it to its original location; except, that moving time will not be paid if the equipment is used on other than the extra work, even though located at the site of the extra work.

11.3.5.2 Rental time will not be allowed while equipment is inoperative due to breakdowns.

11.3.5.3 Computation Method - The following shall be used in computing the rental time of equipment on the work site.

11.3.5.3.1 When hourly rates are listed, any part of an hour less than thirty (30) minutes of operation shall be considered to be one-half (.5) hour of operation, and any part of an hour in excess of thirty (30) minutes will be considered one (1) hour of operation.

11.3.5.3.2 When daily rates are listed, any part of a Day less than four (4) hours operation shall be considered to be one-half (.5) Day of operation.

11.3.6 CONTRACTOR-Owned Equipment - For CONTRACTOR-owned equipment, the allowed equipment rental rate will be limited to the monthly equipment rental rate using a utilization rate of one hundred seventy-three (173) hours per month which is found in the Equipment Rental Rate Tables authorized by the Supplementary General Conditions for rental equipment.

11.3.7 Special Services Special work or services are defined as that work characterized by extraordinary complexity, sophistication or innovation or a combination of the foregoing attributes which are unique to the construction industry.

11.3.7.1 When OWNER and CONTRACTOR determine that a special service is required which cannot be performed by the forces of CONTRACTOR or those of any of its Subcontractors, the special service may be performed by an entity especially skilled in the work. Invoices for special services based upon the current fair market value thereof may be accepted without complete itemization of labor, material and equipment rental costs, after validation of market values by OWNER.

11.3.7.2 All invoices for special services will be adjusted by deducting all trade discounts offered or available, whether the discounts were taken or not. In lieu of the allowances for overhead and profit specified in this Article, herein, an allowance of fifteen (15) percent will be added to invoices for special services.

11.3.8 Excluded Costs - The term "cost of the work" shall not include any of the following costs:

11.3.8.1 Overhead Cost - Payroll costs and other compensation of CONTRACTOR's officers, executives, principals (of partnership and sole proprietorships) general managers, engineers, architects, estimators, attorneys, auditors, accountants, purchasing and contracting agents, timekeepers, clerks and other personnel employed by CONTRACTOR whether at the site or in CONTRACTOR's principal office, a branch office or material yard and shop for general administration of the Work or not specifically covered by this Article all of which are to be considered administrative costs covered by CONTRACTOR's allowance for overhead and profit.

11.3.8.2 Office Expense - Expenses of CONTRACTOR's principal and branch offices.

11.3.8.3 Capital Expenses - Any part of CONTRACTOR's capital expenses, including interest on CONTRACTOR's capital employed for the WORK and charges against CONTRACTOR for delinquent payments.

11.3.8.4 Premiums - Cost of premiums for all Bonds and for all insurance whether or not CONTRACTOR is required by the Contract Documents to purchase and maintain the same.

11.3.8.5 Negligence - Costs due to the negligence of CONTRACTOR, any Subcontractor or anyone directly or indirectly employed by any of them or for whose acts any of them may be liable, including but not limited to, the correction of Defective Work, disposal of materials or equipment wrongly supplied and making good any damage to property.

11.3.8.6 Other - Other overhead or general expense costs of any kind and the cost of any item not specifically and expressly included in this Article.

11.3.8.7 Small Tools - Cost of small tools valued at less than five hundred dollars ($500) and that remain the property of CONTRACTOR.

11.3.8.8 Administrative Costs - Costs associated with the preparation of Change Orders (whether or not ultimately authorized), cost estimates or the preparation or filing of claims.

11.3.8.9 Anticipated Lost Profits - Expenses of CONTRACTOR associated with anticipated lost profits or lost revenues, lost income or earnings, lost interest on earnings or unpaid retainage.

11.3.8.10 Home Office Overhead - Costs derived from the computation of a home office overhead rate by application of the Eichleay, Allegheny, Burden Fluctuation or other similar methods.

11.3.8.11 Special Consultants and Attorneys - Costs of special consultants or attorneys, whether or not in the direct employ of CONTRACTOR, employed for services specifically related to the resolution of a claim, dispute or other matter relating to the acceptability of the Work.

11.3.9 CONTRACTOR's Extra Work Report - In order to be paid for extra work based on time and materials, CONTRACTOR must submit a daily Extra Work Report on a form provided by OWNER. The form must be completely filled out based on the provisions of this Article and signed by CONTRACTOR and OWNER at the end of each work Day. Failure to complete the form and obtain appropriate signatures by the next working Day after the work was completed will result in CONTRACTOR's costs for extra work being disallowed until such form is completed and agreed to by OWNER. Delay in submitting the form beyond seven (7) Days will result in OWNER's records becoming the official record for payment purposes.

11.4 COSTS RELATING TO WEATHER DAMAGE

CONTRACTOR shall have no cost claims against OWNER for damages for any injury to work, materials or equipment, resulting from the action of the elements or weather. Weather-related adjustment to Contract Time will be made in accordance with Article 12.

11.5 WRITTEN JUSTIFICATION SUBSTANTIATING ADJUSTMENT

11.5.1 CONTRACTOR Initiated Change - Any request by CONTRACTOR for a change in the Contract Price shall be based on written notice delivered by CONTRACTOR to OWNER promptly (but in no event later than seven (7) Days) after the start of the occurrence or the event giving rise to the request for adjustment and stating the general nature of the request.

11.5.2 Cost and Time Notice Requirements - Notice of the amount of the request for adjustment in cost and/or time with supporting data shall be delivered within fourteen (14) Days after such start of occurrence, unless OWNER allows an additional period of time to ascertain more accurate data in support of the request.

11.5.3 Proposal Form - CONTRACTOR's proposal shall be on forms acceptable to OWNER. CONTRACTOR proposal request shall certify in writing that the amounts included cover all direct, supplemental, indirect, consequential and cumulative costs and delays, as applicable, and that those costs and delays would be or were necessarily incurred, despite CONTRACTOR's reasonable and diligent efforts to mitigate them. Mitigation efforts undertaken by CONTRACTOR should be described.

11.5.4 Proposal Content - Where the change in Contract Price is to be determined on the basis of the cost of the work involved, CONTRACTOR's itemized estimates shall detail all applicable elements of cost, including, but not limited to, labor hours and payroll costs, quantities, crew mixes, production rates, material costs, Subcontractor and Supplier costs, equipment costs and supplemental costs. Where the change in Contract Price arises from changes in the schedule of all or part of the WORK, or where a change in Contract Time is sought, the submittal shall include analysis required by Article 12. With respect to work during other than normal hours, the labor charges associated with such work shall consist of straight time wages and burden plus the appropriate overtime or shift premium with no additional burden (i.e., fringe benefits) on the premium portion.

11.5.5 Additions and Deletions - The submittal shall cover all aspects of the work involved, whether relating to deleted, added, revised or impacted items of Work. Amounts for Subcontractors or Suppliers at any tier shall be similarly supported.

11.5.6 Requirements for Valid Proposal - No submittal for an adjustment in Contract Price or Contract Time shall be valid unless submitted in accordance with this Article.

11.5.7 Obligation of Surety - All work performed hereunder shall be subject to all of the provisions of the Contract Documents and CONTRACTOR's sureties shall be bound with reference thereto as under the Agreement. Copies of all amendments to surety Bonds or supplemental surety Bonds shall be submitted to OWNER when requested.

11.5.8 Documentation - CONTRACTOR is required to comply with OWNER's documentation requirements regarding format and level of detail for the Change Order process.

11.6 OWNER RIGHT TO DIRECT USE OF COMPETITIVE BID - OWNER reserves the right to direct CONTRACTOR to solicit competitive bids for additional work. If required by

OWNER, CONTRACTOR shall obtain competitive bids from Subcontractors acceptable to CONTRACTOR and shall deliver such bids to OWNER who will then determine, with the advice of OWNER, which bids will be accepted.

ARTICLE 12 -- CHANGE OF CONTRACT TIME

12.1 GENERAL

12.1.1 CONTRACTOR Request For Time Extension - The Contract Time may only be changed by a Change Order or Field Order. Any request by CONTRACTOR for an extension of the Contract Time (or Milestones) shall be based on written notice delivered by CONTRACTOR to OWNER promptly (but in no event later than seven (7) Days) after the occurrence of the event giving rise to the request and stating the general nature of the request, unless otherwise noted. Notice of the extent of the request with supporting data shall be delivered within fourteen (14) Days after such occurrence (unless OWNER allows an additional period of time to ascertain more accurate data in support of the request) and shall be accompanied by CONTRACTOR'S written statement that the adjustment requested is the entire time adjustment to which CONTRACTOR has reason to believe it is entitled as a result of the occurrence of said event. An increase in Contract Time does not mean that CONTRACTOR is due an increase in Contract Price.

12.1.2 CONTRACTOR Required Analysis - An extension in Contract Time will not be granted unless CONTRACTOR can demonstrate through an analysis of the Critical Path Method Progress Schedule critical path that the increases in the time to perform or complete the WORK, or specified part of the WORK, beyond the corresponding Contract Time arise from unforeseeable causes beyond the control and without the fault or negligence of both CONTRACTOR and his Subcontractors, Suppliers or other persons or organizations, and that such causes in fact lead to performance or completion of the WORK, or specified part in question, beyond the corresponding Contract Time, despite CONTRACTOR's reasonable and diligent actions to guard against those effects.

12.1.3 OWNER's Right To Grant Time Extension - OWNER may elect, at its sole discretion, to grant an extension in Contract Time, without CONTRACTOR's request, because of delays or other factors.

12.2 TIME IS OF THE ESSENCE - With regard to all Milestones and all time limits stated in the Contract Documents, time is of the essence.

12.3 CRITERIA FOR DETERMINING ADJUSTMENTS IN CONTRACT TIME

12.3.1 Use Of Float and Critical Path - Use of float is in accordance with the SPECIAL PROVISIONS.

12.3.2 Types Of Delays Beyond CONTRACTOR's and OWNER'S Control - Delays beyond the control of CONTRACTOR shall include, but not be limited to, acts or neglect by OWNER, acts or neglect of utility owners, fires, floods, epidemics, abnormal weather conditions, labor

slowdowns and strikes or acts of God. CONTRACTOR must provide OWNER written notice of the potential delay within twenty-four (24) hours of the occurrence.

12.3.3 Subcontractor Delays Within CONTRACTOR Control - Delays attributable to and within the control of Subcontractor or Supplier shall be deemed to be delays within the control of CONTRACTOR. No time extension will be allowed for such delays.

12.4 TIME ONLY ENTITLEMENT

12.4.1 - Where CONTRACTOR is prevented from completing any part of the WORK within the Contract Time (or Milestones) due to delay to a critical path activity beyond the control of both OWNER and CONTRACTOR, an extension of the Contract Time (or Milestones) in an amount equal to the time lost on the critical path of the Project due to such delay shall be CONTRACTOR's sole and exclusive remedy for such delay.

12.4.2 - In no event shall OWNER be liable to CONTRACTOR, any Subcontractor, any Supplier or any other person or organization, or to any surety for or employee or agent of any of them, for damages arising out or resulting from (i) delays caused by or within the control of CONTRACTOR, or (ii) delays beyond the control of both parties including but not limited to fires, floods, epidemics, abnormal weather conditions, acts of God or acts or neglect by utility owners or other contractors performing other work as contemplated by Article 7. CONTRACTOR must provide OWNER written notice of the potential delay within twenty-four (24) hours of the occurrence.

12.5 EXTENSIONS OF TIME FOR DELAY DUE TO WEATHER - An inclement weather delay is defined as a delay caused by inclement weather which prevents CONTRACTOR from working on the controlling item in CONTRACTOR's construction schedule. Should CONTRACTOR experience inclement weather delays over the course of contract duration in excess of the number of Days outlined in the Supplementary General Conditions, CONTRACTOR shall be granted a time extension in accordance with the provisions outlined in this Article. The time extension shall be based on the number of inclement weather Days in excess of the number of Days outlined in the Supplementary General Conditions.

12.5.1 Extension of Time For Delays due to Weather Damage - If, however, in the opinion of OWNER, CONTRACTOR has made all reasonable efforts to protect the materials, equipment and work, CONTRACTOR may be granted a reasonable extension of Contract Time to make proper repairs, renewals and replacements of the work, materials or equipment in accordance with Article 12.

ARTICLE 13 -- TESTS AND INSPECTIONS; CORRECTION, REMOVAL OR ACCEPTANCE OF DEFECTIVE WORK; WARRANTY AND GUARANTEE

13.1 TESTS AND INSPECTIONS

13.1.1 ACCESS TO WORK FOR TESTING AND INSPECTION - OWNER, OWNER, their consultants, Sub-Consultants other representatives and personnel of OWNER, independent testing

laboratories and governmental agencies with jurisdictional interests will have access to the WORK at reasonable times for their observation, inspecting and testing. CONTRACTOR shall provide them proper and safe conditions for such access and advise them of CONTRACTOR's Safety procedures and programs so that they may comply.

13.1.2 Cost of Inspection/Notice - OWNER will make, or have made, such inspections and tests as OWNER deems necessary to see that the WORK is being accomplished in accordance with the requirements of the Contract Documents. Unless otherwise specified, the cost of such inspection and testing will be borne by OWNER. In the event such inspections or tests reveal non-compliance with the requirements of the Contract Documents, CONTRACTOR shall bear the cost of corrective measures deemed necessary by OWNER, as well as the cost of subsequent re-inspection and re-testing.

Neither observations by OWNER nor inspections, tests or approvals by others shall relieve CONTRACTOR from CONTRACTOR's obligation to perform the WORK in accordance with the Contract Documents.

CONTRACTOR shall give OWNER timely notice as specified in the technical specification or five (5) Days if not identified of readiness of the WORK for all required on and off site inspections, tests or approvals, and shall cooperate with inspection and testing personnel to facilitate required inspections or tests.

OWNER shall provide for the services of an independent testing laboratory to perform inspections, tests or approvals required by the Contract Documents except as otherwise specifically provided.

CONTRACTOR shall be responsible for arranging any inspection required by a public entity. CONTRACTOR shall provide adequate notice to the public entity and to OWNER for any required inspection.

13.1.3 Right to Stop Work - OWNER has the right to stop or suspend work activities which will cover CONTRACTOR work product which is to be inspected or tested, or which will interfere with the inspection or testing activities, for a reasonable time and CONTRACTOR will have no right to additional cost or time he may incur as a result of the work stoppage.

13.2 CONTRACTOR INSPECTION AND TESTING RESPONSIBILITY

13.2.1 - CONTRACTOR shall be responsible for performance of tests and inspections in accordance with the SPECIAL PROVISIONS.

13.2.2 If laws or regulations of any public body having jurisdiction other than OWNER require any work to specifically be inspected, tested or approved, CONTRACTOR shall pay all costs.

13.2.3 CONTRACTOR shall be responsible for and shall pay all costs in connection with any inspection or testing required in connection with OWNER's or OWNER's acceptance of a Supplier of materials or equipment proposed as a substitution or "or-equal" to be incorporated in the

WORK, or of materials or equipment submitted for review prior to CONTRACTOR's purchase thereof for incorporation in the WORK.

13.2.4 CONTRACTOR shall pay all related costs, schedule related activities at appropriate times and secure and furnish for OWNER the required certificates of inspection, testing or approval. Any associated cost and time required by CONTRACTOR for inspections required under Article 13.2 shall be considered as having been included in the Contract Price and in CONTRACTOR's schedule for the performance of the WORK within the Contract Time.

13.2.5 All inspections, tests or approvals other than those required by laws or regulations of any public body having jurisdiction shall be performed by organizations acceptable to OWNER.

13.2.6 CONTRACTOR shall anticipate at a minimum the following testing and inspection requirements over and above those required by the Contract Documents:

Civil Engineering Inspections/Reviews

1. All form work
2. Concrete placement
3. Remove and Replace areas

13.3 COVERING WORK TO BE INSPECTED

13.3.1 Covered Work Prior To Inspection Or Testing - If any WORK (including the work of others) that is to be inspected, tested or approved is covered without written concurrence of OWNER, it must, when requested by OWNER, be uncovered for inspection. CONTRACTOR shall bear all direct, indirect, and consequential costs and damages of such uncovering, unless CONTRACTOR has given OWNER and/or agencies timely notice of CONTRACTOR's intention to cover the same, and OWNER has not acted with reasonable promptness in response to such notice.

13.3.2 Covered Work Contrary To Written Request - If any WORK is covered contrary to the written request of OWNER, it must, when requested by the OWNER, be uncovered for OWNER's observation and recovered. CONTRACTOR shall bear all direct, indirect and consequential costs and damages of such uncovering.

13.3.3 OWNER Right to Direct That Work Be Uncovered For Inspection Or Testing

13.3.3.1 If OWNER considers it necessary or advisable that covered work be observed by OWNER or inspected or tested by others, CONTRACTOR, at OWNER's request, shall uncover, expose or otherwise make available for observation, inspection or testing as OWNER may require, that portion of the WORK in question, furnishing all necessary labor, material and equipment.

13.3.3.2 If it is found that such WORK is defective, CONTRACTOR shall bear all direct, indirect and consequential costs and damages of such uncovering, exposure, observation, inspection and testing and of satisfactory reconstruction, including but not limited to fees and charges of

engineers, architects, attorneys and other professionals. However, if such work is not found to be defective, CONTRACTOR shall be allowed an increase in the Contract Price or an extension of the Contract Time, or both, directly attributable to such uncovering, exposure, observation, inspection, testing and reconstruction based on the time and materials provisions as outlined in Article 11.

13.4 OWNER MAY STOP THE WORK - If the WORK is determined to be defective by OWNER, and CONTRACTOR fails to immediately correct the defect or CONTRACTOR fails to perform WORK in such a way that the completed WORK will conform to the Contract Documents, OWNER may order CONTRACTOR to stop the WORK, or any portion thereof, until the cause for such order has been eliminated; however, this right of OWNER to stop the WORK shall not give rise to any duty on the part of OWNER or OWNER to exercise this right for the benefit of CONTRACTOR or any other party. CONTRACTOR shall bear all direct, indirect and consequential costs and damages that result from this stop work notice.

13.5 CORRECTION, REMOVAL OR ACCEPTANCE OF DEFECTIVE WORK

13.5.1 CONTRACTOR's Responsibility - If required by OWNER, CONTRACTOR shall promptly, either correct all Defective Work, whether or not fabricated, installed or completed, or, if the WORK has been rejected by OWNER, remove it from the site and replace it with non-Defective Work. CONTRACTOR shall bear all direct, indirect and consequential costs and damages of such correction or removal.

13.5.2 OWNER Acceptance of Defective Work - If, instead of requiring correction or removal and replacement of Defective Work, OWNER prefers to accept the WORK, OWNER may do so. CONTRACTOR shall bear all direct, indirect and consequential costs attributable to OWNER's evaluation of and determination to accept such Defective Work. If any such acceptance occurs prior to Final Payment, a Change Order will be issued incorporating the necessary revisions in the Contract Documents with respect to the WORK, and OWNER shall be entitled to an appropriate decrease in the Contract Price, determined by OWNER and charged to CONTRACTOR through a deductive Change Order.

13.5.3 OWNER May Correct Defective Work

13.5.3.1 If CONTRACTOR after receiving written notice, from OWNER or from OWNER, or both, fails within a reasonable time as specified in the notice, to correct Defective Work or to remove and replace rejected WORK, OWNER may correct and remedy any such deficiency. If CONTRACTOR after receiving written notice from OWNER or OWNER, or both, fails within reasonable time as specified in the notice, to perform the WORK in accordance with the Contract Documents, or fails to comply with any other provision of the Contract Documents, OWNER may correct and remedy any such deficiency.

13.5.3.2 In exercising the rights and remedies under this paragraph OWNER shall proceed expeditiously.

13.5.3.3 In connection with such corrective and remedial action, OWNER may exclude CONTRACTOR from all or part of the site, take possession of all or part of the WORK, and suspend CONTRACTOR's services related thereto, take possession of CONTRACTOR's tools, appliances, construction equipment and machinery at the site and incorporate in the Work all materials and equipment stored at the site or for which OWNER has paid CONTRACTOR but which are stored elsewhere.

13.5.3.4 CONTRACTOR shall allow OWNER, Engineers, Agents and employees, OWNER's other contractors, OWNER and OWNER access to the site to enable OWNER to exercise the rights and remedies under this paragraph.

13.5.3.5 All claims, costs, losses and damages incurred or sustained by OWNER in exercising such rights and remedies will be charged against CONTRACTOR and a Change Order will be issued incorporating the necessary revisions in the Contract Documents with respect to the WORK, and OWNER shall be entitled to an appropriate decrease in the Contract Price, and, if the parties are unable to agree as to the amount thereof, OWNER may unilaterally issue the Change Order through OWNER.

13.5.3.6 Such claims, costs, losses and damages will include but not be limited to all costs of repair or replacement of work of others destroyed or damaged by correction, removal or replacement of CONTRACTOR's Defective Work.

13.5.3.7 CONTRACTOR shall not be allowed an extension of the Contract Time (or Milestones) because of any delay in the performance of the WORK attributable to the exercise by OWNER of OWNER's rights and remedies hereunder.

13.6 WARRANTY AND GUARANTEE

13.6.1 General - CONTRACTOR warrants and guarantees to OWNER that all work will be in accordance with the Contract Documents and will not be defective. Prompt notice of defects known to OWNER or OWNER shall be given to CONTRACTOR. All Defective Work, whether or not in place, may be rejected, corrected or accepted as provided in this Article 13. Defective Work may be rejected even if approved by prior inspection.

13.6.2 One (1) Year Warranty Period - The warranty period shall commence when the Notice of Completion is issued, at notice of Beneficial Occupancy or at notice of Partial Utilization of the work to be warranted has been issued, or a later date if so specified in the Agreement, or mutually agreed to, and extend until one (1) year after that date or whatever longer period may be prescribed by laws or regulations or by the terms of any applicable special guarantee or specific provision of the Contract Documents.

13.6.3 Correction of Defective Work - If within the designated warranty period, or such longer period as may be required by Laws or Regulations, the WORK, or any part of the WORK, is discovered to be defective, CONTRACTOR shall promptly, without an adjustment in Contract Price and in accordance with OWNER's or OWNER's written instructions, either correct that Defective Work, or if it has been rejected by OWNER or OWNER, remove it from the site and

replace it with non-Defective Work. If circumstances warrant it, including but not limited to, in an emergency, OWNER or OWNER may have the Defective Work corrected or the rejected WORK removed and replaced. In that event, CONTRACTOR shall not be allowed to recover any associated costs, and he shall reimburse OWNER for all direct, indirect and consequential costs of OWNER, and OWNER shall be entitled to an appropriate decrease in Contract Price, to withhold a set-off against amount recommended for payment, or make a claim on CONTRACTOR's bond if CONTRACTOR has been paid in full. Where Defective Work (and damage to other WORK resulting therefrom) has been corrected, removed or replaced during the warranty period, the one (1) year warranty period with respect to such WORK will be extended for an additional period of one (1) year after such correction or removal and replacement has been satisfactorily completed.

13.6.4 Early Completion - The one (1) year warranty period will not begin until the Notice of Completion is filed. If CONTRACTOR completes the WORK or portions thereof prior to this time, he shall preserve the equipment and/or facilities by developing and implementing a preventive maintenance program in compliance with manufacturer's recommendations to maintain the equipment and/or facilities unless OWNER has issued a notice of Beneficial Occupancy or notice of Partial Utilization for the warranted WORK. At start up, CONTRACTOR will be required to get his equipment and/or facilities ready to put into service.

13.7 EXTENDED WARRANTIES AND GUARANTEES - OWNER may at its sole discretion extend the one (1) year warranty period up to twenty-four (24) months, in which case CONTRACTOR shall maintain the warranties and guarantees. If such extension of the one (1) year warranty period causes an increase in the cost of the warranties and guarantees provided by CONTRACTOR, an adjustment in Contract Price shall be made as provided by the Contract Documents.

13.7.1 Extended Warranties and Guarantees - OWNER may extend the one (1) year Warranty period for up to twenty-four (24) additional months.

ARTICLE 14 -- PAYMENTS TO CONTRACTOR AND COMPLETION

14.1 BASIS FOR PAYMENT

14.1.1 Lump Sum Items

14.1.1.1 General - Items for which quantities are indicated as Lump Sum shall be paid for at the price indicated in the Bid. Such payment shall be full compensation for the items of WORK and all work appurtenant thereto.

14.1.1.2 Critical Path Method ("CPM") Schedule Used For Payment - Payment for all lump sum costs and services shall be based on the value of WORK accomplished. The allocation of cost to CPM schedule activities will be utilized for payment computation.

14.1.1.3 Critical Path Method Schedule Required - CONTRACTOR shall submit to OWNER a detailed cost loaded and manpower loaded CPM schedule, to be used as a basis for determining progress payments in accordance with the General Requirements.

14.1.2 Unit Priced Items

14.1.2.1 General - Unit price items will be paid for based on equivalent quantities installed or performed. Unless otherwise specified, quantities of WORK shall be determined from measurements or dimensions in horizontal planes. However, linear quantities of pipe, piling, fencing and timber shall be considered as being the true length measured along the longitudinal axis. Unless otherwise provided in the Specifications, volumetric quantities shall be the product of the mean area of vertical or horizontal sections and the intervening horizontal or vertical dimension. CONTRACTOR and OWNER will agree on the unit quantity to be used for payment prior to its installation or removal when possible, or immediately after installation.

14.1.2.2 Methods of Measurement - Materials and items of WORK which are to be paid for on the basis of measurement shall be measured in accordance with the methods stipulated in the particular sections involved.

14.1.2.3 Certified Weight - When payment is to be made on the basis of weight, the weighing shall be done on certified platform scales or, when approved by OWNER, on a completely automated weighing and recording system. CONTRACTOR shall furnish OWNER with duplicate licensed weighmaster's certificates showing the actual net weights.

14.1.2.4 Units of Measurement - Measurements shall be in accordance with U.S. standard measures. A pound is an avoirdupois pound. A ton is two thousand (2,000) pounds avoirdupois. The unit of liquid measure is the U.S. gallon.

14.2 PAYMENT

14.2.1 Wasted Or Rejected Material - Payment will not be made for materials wasted or disposed of in a manner not called for in the Contract Documents. This includes rejected material not unloaded from vehicles, material rejected after it has been placed and material placed outside of the plan lines. No compensation will be allowed for disposing of rejected or excess materials.

14.2.2 CONTRACTOR Retains Ownership - Payment shall not relieve CONTRACTOR from its obligations under the Agreement, nor shall such payment be construed to be acceptance of any of the WORK. Payment shall not be construed as the transfer of ownership of any equipment or materials to OWNER. Responsibility of ownership shall remain with CONTRACTOR who shall be obligated to store, protect, repair, replace, rebuild or otherwise restore any fully or partially completed WORK or structure for which payment has been made, or replace any materials or equipment required to be provided under the Agreement which may be damaged, lost, stolen or otherwise degraded in any way prior to final acceptance of the WORK.

14.2.3 Payment Does Not Affect Warranty - Guarantee and warranty periods shall not be affected by any payment but shall commence as specified in Article 13.6.2.

14.2.4 Stop Notice - If, within the time fixed by law, a properly executed notice to stop payment is filed with OWNER, due to CONTRACTOR's failure to pay for labor or materials used in the

WORK, all money due for such labor or materials will be withheld from payment to CONTRACTOR in accordance with applicable laws.

14.3 APPLICATION FOR PROGRESS PAYMENT

14.3.1 Payment Due Date - CONTRACTOR shall, on the payment application date designated by OWNER, submit to OWNER for review, an Application for Payment filled out and signed by CONTRACTOR covering the WORK completed as of the date of the application and accompanied by such supporting documentation as is required by the General Requirements.

14.3.2 Payment Application Content - The Application for Payment shall identify, as a subtotal, the amount of CONTRACTOR's total earnings to date, plus the value of materials stored at the site which have not yet been incorporated in the WORK, and less a deductive adjustment for materials previously paid. Payment for such material shall not be construed as acceptance of the material.

14.3.3 Net Payment - The net payment due CONTRACTOR shall be the above-mentioned subtotal from which shall be deducted retainage and the total amount of all previous payments made to CONTRACTOR.

14.3.4 Retention - A retention of five (5) percent of each approved progress payment will be withheld until the work is fifty (50) percent complete; then OWNER may, at its option, refund that portion of retainage held by OWNER that is in excess of five (5) percent of the total of the WORK done to date and thereafter continue to retain five (5) percent of the value of all approved progress payment requests subsequently submitted. When the Notice of Completion is issued, OWNER at its option, may refund any portion of the remaining retention.

14.3.5 Retainage From Payments - CONTRACTOR may elect to receive one hundred (100) percent of payments due under the Contract Documents from time to time, without retention of any portion of the payment by OWNER, by depositing securities of equivalent value with OWNER in accordance with the provisions of section 22300 of the Public Contract Code. Such securities, if deposited by CONTRACTOR, shall be valued by OWNER, whose decision on valuation of the securities shall be final. Securities eligible for investment under this provision shall be limited to those listed in section 16430 of the Government Code, bank or savings and loan certificates of deposit, interest-bearing demand deposit accounts, standby letters of credit or any other security mutually agreed to by CONTRACTOR and OWNER.

14.3.6 Reinstating Retention - OWNER may reinstate up to five (5) percent retention of the total of the WORK done if OWNER determines, at its discretion, that CONTRACTOR is not performing the WORK satisfactorily or there is other specific cause for such withholding.

14.3.7 Products Stored On and Off Site - Storage and payment for material supplies and/or equipment which will be incorporated into the WORK shall be in accordance with the provisions of the General Requirements.

14.4 CONTRACTOR'S WARRANTY OF TITLE - CONTRACTOR warrants and guarantees that title to all work, materials and equipment covered by an Application for Payment, whether incorporated in the WORK or not, will pass to OWNER at the time of Final Payment free and clear of all liens.

14.5 APPLICATIONS FOR PROGRESS PAYMENT - Thirty (30) Days after presentation of undisputed and properly submitted Application for Payment, the amount will become due and when due will be paid by OWNER to CONTRACTOR.

Any payment request that is disputed or determined to be improper shall be returned to CONTRACTOR not later than seven (7) Days after receipt accompanied by documentation describing the reason(s) why the payment request is not proper.

Any progress payment not made within thirty (30) Days of an undisputed and properly submitted payment request will require OWNER to pay interest as provided by Public Contract Code section 20104.50.

14.6 REJECT PAYMENT FOR DEFECTIVE WORK - OWNER may also refuse to recommend any such payment, or, because of subsequently discovered evidence or the results of subsequent inspections or tests, nullify any such payment previously recommended, to such extent as may be necessary in OWNER's opinion to protect OWNER from loss because:

14.6.1 The WORK is defective, or completed WORK has been damaged requiring correction or replacement,

14.6.2 The Contract Price has been reduced by written amendment or Change Order,

14.6.3 OWNER has been required to correct Defective Work or complete WORK in accordance with Article 13.

14.6.4 OWNER has actual knowledge of the occurrence of any of the events enumerated in Article 15.

14.7 REJECTION OF PAYMENT BY OWNER - OWNER may refuse to make payment of the full amount recommended by OWNER because claims have been made against OWNER on account of CONTRACTOR's performance of the WORK or liens have been filed in connection with the WORK or there are other items entitling OWNER to a credit against the amount recommended, but OWNER must give CONTRACTOR written notice within seven (7) Days (with a copy to OWNER) stating the reasons for such action.

14.8 SUBSTANTIAL COMPLETION

14.8.1 When CONTRACTOR considers the WORK ready for its intended use CONTRACTOR shall notify OWNER in writing that the WORK is substantially complete. CONTRACTOR shall attach to this notice a list of all work items that remain to be completed.

14.8.2 Within a reasonable time thereafter, OWNER, CONTRACTOR and OWNER shall make an inspection of the WORK to determine the status of completion.

14.8.3 If OWNER does not consider the WORK substantially complete, or the list of remaining work items to be comprehensive, OWNER will notify CONTRACTOR in writing giving the reasons therefore.

14.8.4 If OWNER considers the WORK substantially complete, OWNER will prepare and deliver to OWNER a notice of Substantial Completion, which shall fix the date of Substantial Completion. There shall be attached to the certificate a tentative list of items to be completed or corrected before Final Payment. At the time of delivery of the notice of Substantial Completion, OWNER will deliver to OWNER and CONTRACTOR a written recommendation as to division of responsibilities pending Final Payment between OWNER and CONTRACTOR with respect to security, operation, Safety, maintenance, heat, utilities, insurance and warranties and guarantees.

14.8.5 OWNER shall have the right to exclude CONTRACTOR from the WORK after the date of Substantial Completion, but OWNER shall allow CONTRACTOR reasonable access to complete or correct items on the list of remaining WORK items, or for warranty work.

14.9 PARTIAL UTILIZATION AND BENEFICIAL OCCUPANCY

14.9.1 Partial Utilization - OWNER shall have the right to utilize or place into service any item of equipment or other usable portion of the WORK which is substantially complete prior to completion of all of the WORK. Whenever OWNER plans to exercise said right, CONTRACTOR will be notified in writing with a notice of Partial Utilization signed by OWNER identifying the specific portion or portions of the WORK to be so utilized or otherwise placed into service. Liquidated damages will not be affected.

14.9.2 Beneficial Occupancy - OWNER shall have the right to take control of the entire WORK if it is substantially completed. Whenever OWNER plans to exercise said right CONTRACTOR will be notified in writing with a notice of Beneficial Occupancy. Such use by OWNER will terminate liquidated damages.

14.9.3 Responsibility For Care and Maintenance - It shall be understood by CONTRACTOR that until Beneficial Occupancy or Partial Utilization notices are issued or start up begins, all responsibility for care and maintenance of all of the WORK shall be the responsibility of CONTRACTOR. Upon issuance of said written notice of Beneficial Occupancy or notice of Partial Utilization, OWNER will accept responsibility for the protection and maintenance of all such items or portions of the WORK described in the written notice.

14.9.4 CONTRACTOR Responsible For Completion - CONTRACTOR shall retain full responsibility for satisfactory completion of the WORK, regardless of whether a portion thereof has been partially utilized by OWNER.

14.10 FINAL INSPECTION - Upon written notice from CONTRACTOR that the entire WORK or an agreed portion thereof is complete, OWNER will make a final inspection with OWNER and CONTRACTOR and will notify CONTRACTOR in writing of all particulars in which this inspection reveals that the WORK is incomplete or defective. CONTRACTOR shall immediately take such measures as are necessary to complete such WORK or remedy such deficiencies.

14.11 FINAL APPLICATION FOR PAYMENT - After CONTRACTOR has completed all of the remaining work items referred to in Article 14, removed all temporary structures and utilities, cleared the site, delivered all maintenance and operating instructions, schedules, guarantees, Bonds, certificates of inspection, marked-up record documents and other documents, all as required by the Contract Documents, and after OWNER has indicated that the WORK is acceptable, CONTRACTOR may make application for Final Payment following the procedure for progress payments. The final Application for Payment shall be accompanied by all documentation called for in the Contract Documents, together with complete and legally effective releases or waivers satisfactory to OWNER of all liens arising out of or filed in connection with the WORK. If CONTRACTOR has specific claims outstanding he shall restate these claims by stating the nature of the claim, the basis for entitlement and the estimated value of the claim. CONTRACTOR shall specifically release OWNER from any other claims not renewed.

14.12 FINAL PAYMENT AND ACCEPTANCE

14.12.1 If, on the basis of OWNER's observation of the WORK during construction and final inspection, and OWNER's review of the final Application for Payment and accompanying documentation, all as required by the Contract Documents, OWNER is satisfied that the WORK has been completed and CONTRACTOR's other obligations under the Contract Documents have been fulfilled, OWNER will, within fourteen (14) Days after receipt of the final Application for Payment, indicate in writing OWNER's recommendation of payment and present the Application for Payment to OWNER for payment. OWNER will also prepare a Notice of Completion.

14.12.2 After acceptance of the WORK by OWNER, OWNER will make Final Payment to CONTRACTOR of the amount remaining after deducting all prior payments and all amounts to be kept or retained under the provisions of the Contract Documents. OWNER will sign the Notice of Completion and file the Notice of Completion with the County Recorder.

14.13 LIQUIDATED DAMAGES

14.13.1 - Failure of CONTRACTOR to complete the WORK within the time allowed will result in damages being sustained by OWNER. For each consecutive calendar Day in excess of the time specified for completion of the WORK, CONTRACTOR shall pay to OWNER, or have withheld from monies due it, the sum provided for in the Contract Documents.

14.13.2 Execution of the Agreement shall constitute agreement by OWNER and CONTRACTOR that specified liquidated damages is the minimum value of the costs and actual damage caused by failure of CONTRACTOR to complete the WORK within the allotted time; that such sum is liquidated damages and shall not be construed as a penalty, and that such sum will be deducted from Final Payment due CONTRACTOR if such delay in completion occurs.

14.14 PARTIAL RELEASE OF RETENTION AT SUBSTANTIAL COMPLETION - If, through no fault of CONTRACTOR, final completion of the WORK is significantly delayed and if OWNER so confirms, OWNER shall, upon receipt of CONTRACTOR's final Application for Payment and recommendation of OWNER, and without terminating the Agreement, make payment of the balance due for that portion of the WORK fully completed and accepted. If the remaining balance to be held by OWNER for WORK not fully completed or corrected is less than the retainage stipulated in the Agreement, and if Bonds have been furnished as required in Article 5, the written consent of the surety to the payment of the balance due for that portion of the WORK fully completed and accepted shall be submitted by CONTRACTOR to OWNER with the Application for such payment. Such payment shall be made under the terms and conditions governing Final Payment, except that it shall not constitute a waiver of claims.

14.15 WAIVER OF CLAIMS - The making and acceptance of Final Payment will constitute:

14.15.1 OWNER - A waiver of all claims by OWNER against CONTRACTOR, except claims arising from unsettled liens, from Defective Work appearing after final inspection pursuant to Article 14, from failure to comply with the Contract Documents or the terms of any special guarantees specified therein, or from CONTRACTOR's continuing obligations under the Contract Documents; and

14.15.2 CONTRACTOR - A waiver of all claims by CONTRACTOR against OWNER other than those previously made in writing and still unsettled and specifically renewed in the Application for Payment.

14.16 RELEASE OF RETAINAGE AND OTHER DEDUCTIONS - After executing the necessary documents to initiate the lien period, and not more than thirty-five (35) Days thereafter (based on a thirty (30) Day lien filing period and five (5) Day processing time), OWNER will release to CONTRACTOR the retainage funds withheld pursuant to the Agreement, less any deductions to cover pending third-party claims and liquidated damages against CONTRACTOR.

14.17 CONTRACTOR'S CONTINUING OBLIGATION - CONTRACTOR's obligation to perform and complete the WORK in accordance with the Contract Documents shall be absolute. Neither recommendation of any progress or Final Payment by OWNER, nor the issuance of a Notice of Completion, nor any payment by OWNER to CONTRACTOR under the Contract Documents, nor any use or occupancy of the WORK or any part thereof by OWNER, nor any act of acceptance by OWNER nor any failure to do so, nor any review of a Shop Drawing or sample submittal, will constitute an acceptance of work not in accordance with the Contract Documents or a release of CONTRACTOR's obligation to perform the WORK in accordance with the Contract Documents.

14.18 TERMINATION OF LIABILITY OF OWNER - The acceptance by CONTRACTOR of final payment referred to in Article 14 herein, shall be a release of OWNER and OWNER from all claims of liability to CONTRACTOR for anything done or furnished for, or relating to, the WORK or for any act or neglect of OWNER or of any person relating to or affecting the WORK, except demands against OWNER for the remainder, if any, of the amounts kept or retained under

the provisions of Article 14 herein; and excepting pending, unresolved claims renewed with the final Application for Payment.

ARTICLE 15 -- SUSPENSION OF WORK AND TERMINATION

15.1 SUSPENSION OF WORK BY OWNER - OWNER, acting through OWNER, may, at any time and without cause, suspend the WORK or any portion thereof for a period of not more than ninety (90) Days by notice in writing to CONTRACTOR. CONTRACTOR shall resume the WORK on receipt from OWNER of a notice of resumption of WORK. CONTRACTOR may submit a request for a change in the Contract Price or of the Contract Time, or both, directly attributable to the suspension as provided in Articles 11 and 12.

15.2 ARCHAEOLOGICAL AND PALEONTOLOGICAL DISCOVERIES

15.2.1 If a discovery is made of an archaeological or paleontological interest, CONTRACTOR shall immediately cease operations in the area of the discovery and shall not continue until ordered by OWNER. This suspension of work may exceed the ninety (90) Day limit without creating a CONTRACTOR right to terminate the Agreement. When resumed, operations within the area of the discovery shall be as directed by OWNER.

15.2.2 Discoveries which may be encountered may include, but not be limited to, dwelling sites, stone implements or other artifacts, animal bones, human bones, fossils or any item with culturally significance.

15.2.3 CONTRACTOR shall be entitled to an extension of time and compensation in accordance with the provisions of the Contract Documents.

15.3 TERMINATION OF AGREEMENT BY OWNER FOR CAUSE

15.3.1 In the event of default by CONTRACTOR, OWNER shall give fourteen (14) Days written notice to CONTRACTOR of OWNER's intent to terminate the Agreement and provide CONTRACTOR opportunity to remedy the conditions constituting the default.

15.3.2 CONTRACTOR Default - It shall be considered a default by CONTRACTOR when CONTRACTOR:

15.3.2.1 Declares bankruptcy, becomes insolvent, assigns its assets for the benefit of its creditors, or is unable to pay debts as they become due;

15.3.2.2 Fails to provide materials or workmanship meeting the requirements of the Contract Documents, and fails to correct the Defective Work as required by Article 13;

15.3.2.3 Disregards or violates provisions of the Contract Documents or OWNER's instructions;

15.3.2.4 Fails to prosecute the WORK according to the approved progress schedule;

15.3.2.5 Fails to provide a qualified superintendent, competent workers or materials or equipment meeting the requirements of the Contract Documents;

15.3.2.6 Fails to maintain license or insurance.

15.3.3 If CONTRACTOR fails to remedy the conditions constituting default within the time allowed, OWNER may then issue the notice of termination.

15.3.4 In the event the Agreement is terminated in accordance with Article 15, OWNER may take possession of the WORK and may complete the WORK by whatever method or means OWNER may select. The cost of completing the WORK shall be deducted from the balance which would have been due CONTRACTOR had the Agreement not been terminated and the WORK completed in accordance with the Contract Documents. If such cost exceeds the balance which would have been due, CONTRACTOR shall pay the excess amount to OWNER. If such cost is less than the balance which would have been due, CONTRACTOR shall not have claim to the difference.

15.4 RIGHTS OF OWNER PRESERVED - Where CONTRACTOR's services have been so terminated by OWNER, the termination will not affect any rights or remedies of OWNER against CONTRACTOR then existing or which may thereafter accrue. Any retention or payment of monies due CONTRACTOR by OWNER will not release CONTRACTOR from liability.

15.5 TERMINATION BY OWNER FOR JUST CAUSE - OWNER may terminate the Contract for just cause at its own discretion or when conditions encountered during the WORK make it impossible or impractical to proceed, or when OWNER is prevented from proceeding with the Agreement by act of God, by law or by official action of a public authority.

15.5.1 Termination for Convenience of OWNER

15.5.1.1 Termination of CONTRACTOR's Performance of WORK - OWNER may terminate, subject to the express terms and conditions set forth below, CONTRACTOR's performance of work under this Agreement, in whole or, from time to time, in part, if OWNER's City Council does not appropriate sufficient monies to fund the Agreement. The City Manager shall terminate on behalf of OWNER by delivering to CONTRACTOR a notice of termination, in writing, specifying the extent of termination and the effective date

15.5.1.2 Notice of Termination - After receipt of the notice of termination, and except as otherwise directed by OWNER's City Manager, CONTRACTOR shall immediately proceed as follows:

15.5.1.2.1 Stop WORK immediately or as specified in the notice;

15.5.1.2.2 Immediately place no further subcontracts for materials, services or facilities, except as necessary to complete any authorized, continued portion of the Agreement;

15.5.1.2.3 Immediately terminate all subcontracts to the extent they relate to the WORK terminated;

15.5.1.2.4 With approval by OWNER's City Manager, settle all outstanding obligations arising from the termination of subcontracts, the approval of which will be final for purposes of this clause;

15.5.1.2.5 As directed by OWNER's City Manager, transfer the title and deliver to OWNER, completed or partially completed drawings, plans, calculations, Specifications and any other documents and records that, if the Agreement has been completed, would be required to be furnished to OWNER;

15.5.1.2.6 Complete performance of the WORK not terminated;

15.5.1.2.7 Take any action that may be necessary, or that OWNER's City Manager may direct, for the protection and preservation of the property related to the Contract Documents that is in the possession of CONTRACTOR and in which OWNER has or may acquire an interest.

15.5.1.3 Removal of CITY Property - CONTRACTOR may request OWNER to remove OWNER's property or enter into an agreement for its storage. Within sixty (60) Days, OWNER will accept title of property and remove it or enter into a storage agreement.

15.5.1.4 Termination Settlement - After termination, CONTRACTOR shall submit a final termination settlement proposal to OWNER's City Manager in the form and with the certification prescribed by OWNER's City Manager. CONTRACTOR shall submit the proposal promptly, but not later than six (6) months from the effective date of termination, unless extended in writing, by OWNER's City Manager upon written request of CONTRACTOR within this six (6) month period. However, if OWNER's City Manager determines that the facts justify it, a termination settlement proposal may be received and acted on after six (6) months or any extension. If CONTRACTOR fails to submit the proposal within the time allowed, OWNER may, in good faith, determine, on the basis of information available, the fair and reasonable amount, if any, due CONTRACTOR as a result of the termination and pay the amount determined. If CONTRACTOR does not agree that the amount determined by OWNER's City Manager is fair and reasonable, and if CONTRACTOR gives notice of such disagreement to OWNER in accordance with this paragraph of the Agreement within thirty (30) Days of receipt of payment, then the amount due shall be as fixed in a court of law.

15.5.1.5 Payment for CONTRACTOR Due to Termination - Subject to the above paragraph, CONTRACTOR and OWNER's City Manager may agree upon the whole or any part of the amount to be paid because of the termination. The amount may include a reasonable allowance for profit on work done. However, the agreed amount, exclusive of costs shown in Paragraph 15.5.1.6.3 below, may not exceed the total dollar amount authorized by OWNER as reduced by (1) the amount of payments previously made; and (2) the Contract Price of work not terminated. The Contract Documents shall be amended, and CONTRACTOR paid the agreed amount. The paragraph below shall not limit, restrict or affect the amount that may be agreed upon to be paid under this paragraph.

15.5.1.6 Failure to Agree on Payment - If CONTRACTOR and OWNER fail to agree on the whole amount to be paid because of the termination of WORK, OWNER shall pay

CONTRACTOR the fair and reasonable amounts determined in good faith by OWNER as follows, but without duplication of any amounts agreed above:

15.5.1.6.1 The Contract Price for completed services accepted by OWNER not previously paid for, adjusted for any saving of freight and other charges.

15.5.1.6.2 The total of:

15.5.1.6.2.1 The costs incurred in the performance of the WORK terminated, including initial costs and preparatory expense allocable thereto, but excluding any costs' attributable to services paid or to be paid under Paragraph 15.5.1.6;

15.5.1.6.2.2 The fair and reasonable cost of settling and paying termination settlement proposals under terminated subcontracts that are properly chargeable to the terminated portion of the Agreement if not included in paragraph above; and

15.5.1.6.2.3 A sum, as profit on the above paragraph determined by OWNER's City Manager to be fair and reasonable under the circumstances; however, if it appears that CONTRACTOR would have sustained a loss on the entire Agreement had it been completed, OWNER shall allow no profit under this paragraph and shall reduce the settlement to reflect the indicated rate of loss.

15.5.1.6.3 The reasonable costs of settlement of the WORK terminated, including:

15.5.1.6.3.1 Accounting, legal, clerical and other expenses reasonably necessary for the preparation of termination of settlement proposals and supporting data;

15.5.1.6.3.2 The termination and settlement of subcontracts (excluding the amounts of such settlements); and

15.5.1.6.3.3 Storage, transportation and other costs incurred, reasonable necessary for the preservation, protection or disposition of property in which OWNER has or may acquire an interest.

15.5.1.7 Dispute of Payment - If CONTRACTOR does not agree that the amount determined by OWNER's City Manager under the paragraph above is fair and reasonable and if CONTRACTOR gives notice of such disagreement to OWNER in accordance with Paragraph 15.5.1.4 of this Contract within thirty (30) Days of receipt of payment, then the amount due shall be as determined in a court of law.

15.5.1.8 Payment for Property Destroyed, Lost Stolen or Damaged - Except to the extent that OWNER expressly assumed the risk of loss, OWNER's City Manager shall exclude from the amounts payable to CONTRACTOR under Paragraph 15.5.1.6 above, the fair value, as determined by OWNER's City Manager, of property that is destroyed, lost, stolen or damaged so as to become undeliverable to OWNER.

15.5.1.9 Determination of Amount Due CONTRACTOR - In arriving at the amount due CONTRACTOR under this clause, there shall be deducted:

15.5.1.9.1 All unliquidated advance or other payments to CONTRACTOR under the terminated portion of this Agreement;

15.5.1.9.2 Any claim which OWNER has against CONTRACTOR under this Agreement; and

15.5.1.9.3 The agreed price for, or the proceeds of sale of, materials, supplies or other things acquired by CONTRACTOR or sold under the provisions of this clause and not recovered by or credited to OWNER.

15.5.2 Partial Termination - If the termination is partial, CONTRACTOR may file a proposal with OWNER's City Manager for an equitable adjustment of the price(s) of the continued portion of the Agreement. OWNER shall make any equitable adjustment agreed upon. Any proposal by CONTRACTOR for an equitable adjustment under this clause shall be requested within ninety (90) Days from the effective date of termination unless extended, in writing, by OWNER's City Manager.

15.5.2.1 Partial Termination Payment - OWNER may, under the terms and conditions it prescribes, make partial payment and payments against costs incurred by CONTRACTOR for the terminated portion of the Agreement if OWNER's City Manager believes the total of these payments will not exceed the amount to which CONTRACTOR will be entitled. If the total payments exceed amount finally determined to be due, CONTRACTOR shall repay the excess to OWNER upon demand, together with interest. Interest shall be at a rate of six (6) percent per annum compounded daily and shall be computed for the period from the date the excess payment is received by CONTRACTOR to the date the excess is repaid. Interest shall not be charged on any excess payment due to a reduction in CONTRACTOR's termination settlement proposal because of retention or disposition, or a later date determined by OWNER's City Manager because of the circumstances.

15.5.5.3 Records and Documents Relating to Termination - Unless otherwise provided in the Agreement or by statute, CONTRACTOR shall maintain all records and documents relating to the terminated portion of this Agreement for three (3) years after final settlement. This includes all books and other evidence bearing on CONTRACTOR's costs and expenses under this Agreement. CONTRACTOR shall make these records and documents available to OWNER, at CONTRACTOR's office, at all reasonable times, without any direct charge. If approved by OWNER's City Manager, photographs, microphotographs or other authentic reproductions may be maintained instead of original records and documents.

15.6 TERMINATION OF AGREEMENT BY CONTRACTOR - CONTRACTOR may terminate the Agreement upon ten (10) Days written notice to OWNER, whenever:

15.6.1 the WORK has been suspended under the provisions of Article 15, for more than ninety (90) consecutive Days through no fault or negligence of CONTRACTOR, and notice to resume

work or to terminate the Agreement has not been received from OWNER within this time period; or,

15.6.2 OWNER should fail to pay CONTRACTOR any monies due him in accordance with the terms of the Contract Documents and within ninety (90) Days after presentation to OWNER by CONTRACTOR of a request therefor, unless within said ten (10) Day period OWNER shall have remedied the condition upon which the payment delay was based.

15.6.3 In the event of such termination, CONTRACTOR shall have no claims against OWNER except for those claims specifically enumerated in Article 15, herein, and as determined in accordance with the requirements of said paragraph.

ARTICLE 16 - DISPUTES

16.1 GENERAL - All claims, counterclaims, disputes and other matters in question arising under, or relating to, the Contract Documents and/or the breach thereof shall be processed in accordance with the provisions of this Article and are subject to audit by OWNER's internal audit staff in accordance with Article 17.

16.2 REQUESTS FOR CHANGE

16.2.1 CONTRACTOR's Right To Request a Change - In accordance with Articles 11 and 12, CONTRACTOR may request a change in the Contract Price or an extension of the Contract Time. Such a request shall be in writing, and shall be delivered to OWNER within the time periods outlined in Articles 11 and 12.

16.2.2 Initial Determination - OWNER shall make an initial determination on CONTRACTOR's request in writing, within twenty (20) working Days of receipt of the requested supporting data.

16.2.3 CONTRACTOR Appeal and Claim - Should CONTRACTOR disagree with OWNER's initial determination, CONTRACTOR may file a Claim requesting a final determination from OWNER. Such a request shall be in writing, and shall be delivered within twenty (20) working Days after receipt of OWNER's initial determination, and after certifying his Claim in accordance with Paragraph 16.3.

16.2.4 Waiver Of Rights - Failure of CONTRACTOR to notify OWNER and deliver supporting data in accordance with the time periods outlined above or failure to respond to OWNER's initial determination within the time period outlined in this paragraph, shall be deemed to be a waiver of objection or right to further Claim of this matter.

16.3 CLAIMS

16.3.1 Definition of Claim - A Claim means a written demand by CONTRACTOR seeking an adjustment in Contract Price and payment of monies so due, an extension or shortening in Contract Time, or other relief arising under or relating to the Agreement following denial of CONTRACTOR's request for a OWNER's initial determination. A written demand by

CONTRACTOR seeking the payment of money or an extension of time is not a Claim under this Article until certified as required below. A voucher, invoice or other routine Application for Payment that is not in dispute when submitted, is not a Claim under this Article.

16.3.2 Claim Arising Under The Agreement - A Claim arising under the Agreement, unlike a Claim relating to the Agreement, is a Claim that can be resolved under an Agreement provision that provides for or excludes the relief sought by the claimant. Such Claims shall be resolved under the applicable provisions of the Agreement.

16.3.3 Period Of Claim - For any Claim under this Article to be valid, it shall be based upon written notice delivered by CONTRACTOR to OWNER promptly, but in no event later than twenty (20) working Days, after receipt of OWNER's initial determination as outlined in Paragraph 16.2. The responsibility to substantiate Claims shall rest with the party making the Claim.

16.3.4 Claim Certification Requirements - For all CONTRACTOR Claims seeking an increase in Contract Price or Contact Time, CONTRACTOR shall submit with the Claim an affidavit certifying that:

16.3.4.1 Claim Made In Good Faith - The Claim is made in good faith, and the amount claimed accurately reflects the adjustments in Contract Price or Contract Time for which CONTRACTOR believes OWNER is liable, and covers all direct, supplemental, indirect, consequential, serial and cumulative costs and delays to which CONTRACTOR is entitled as a result of the occurrence of the claimed event;

16.3.4.2 Cost And Pricing Data - Supporting cost and pricing data are current, accurate, complete and represent the best of CONTRACTOR's knowledge and belief; and,

16.3.4.3 CONTRACTOR's Agent - If CONTRACTOR is an individual, the affidavit shall be executed by that individual; if CONTRACTOR is not an individual, the affidavit shall be executed by a senior company official in charge at CONTRACTOR's plant or location involved or a responsible officer or general partner of CONTRACTOR.

16.3.5 Progress Schedule Analysis - All Claims for time shall be supported by an analysis of the CPM Progress Schedule detailing the impact of the claimed work on specific impacted schedule activities.

16.4 CLAIM RESOLUTION PROCESS

explain his Claim to OWNER. If a settlement agreement cannot be reached, OWNER will proceed to make his written determination.

Notwithstanding anything to the contrary, the following provisions shall apply regarding claims:

As set out in Public Contract Code Section 9204 this provision shall apply to any claim by a contractor in connection with a public works project.
(c) For purposes of this section:
(1) "Claim" means a separate demand by a contractor sent by registered mail or certified mail with return receipt requested, for one or more of the following:

(A) A time extension, including, without limitation, for relief from damages or penalties for delay assessed by a public entity under a contract for a public works project.

(B) Payment by the public entity of money or damages arising from work done by, or on behalf of, the contractor pursuant to the contract for a public works project and payment for which is not otherwise expressly provided or to which the claimant is not otherwise entitled.

(C) Payment of an amount that is disputed by the public entity.

(2) "Contractor" means any type of contractor within the meaning of Chapter 9 (commencing with Section 7000) of Division 3 of the Business and Professions Code who has entered into a direct contract with a public entity for a public works project.

(3) (A) "Public entity" means the City of El Centro.

(4) "Public works project" means the erection, construction, alteration, repair, or improvement of any public structure, building, road, or other public improvement of any kind.

(5) "Subcontractor" means any type of contractor within the meaning of Chapter 9 (commencing with Section 7000) of Division 3 of the Business and Professions Code who either is in direct contract with a contractor or is a lower tier subcontractor.

(d) (1) (A) Upon receipt of a claim pursuant to this section, the public entity to which the claim applies shall conduct a reasonable review of the claim and, within a period not to exceed 45 days, shall provide the claimant a written statement identifying what portion of the claim is disputed and what portion is undisputed. Upon receipt of a claim, a public entity and a contractor may, by mutual agreement, extend the time period provided in this subdivision.

(B) The claimant shall furnish reasonable documentation to support the claim.

(C) If the public entity needs approval from its governing body to provide the claimant a written statement identifying the disputed portion and the undisputed portion of the claim, and the governing body does not meet within the 45 days or within the mutually agreed to extension of time following receipt of a claim sent by registered mail or certified mail, return receipt requested, the public entity shall have up to three days following the next duly publicly noticed meeting of the governing body after the 45-day period, or extension, expires to provide the claimant a written statement identifying the disputed portion and the undisputed portion.

(D) Any payment due on an undisputed portion of the claim shall be processed and made within 60 days after the public entity issues its written statement. If the public entity fails to issue a written statement, paragraph (3) shall apply.

(2) (A) If the claimant disputes the public entity's written response, or if the public entity fails to respond to a claim issued pursuant to this section within the time prescribed, the claimant may demand in writing an informal conference to meet and confer for settlement of the issues in dispute. Upon receipt of a demand in writing sent by registered mail or certified mail, return receipt requested, the public entity shall schedule a meet and confer conference within 30 days for settlement of the dispute.

(B) Within 10 business days following the conclusion of the meet and confer conference, if the claim or any portion of the claim remains in dispute, the public entity shall provide the claimant a written statement identifying the portion of the claim that remains in dispute and the portion that is undisputed. Any payment due on an undisputed portion of the claim shall be processed and made within 60 days after the public entity issues its written statement. Any disputed portion of the claim, as identified by the contractor in writing, shall be submitted to nonbinding mediation, with the public entity and the claimant sharing the associated costs equally. The public entity and claimant shall mutually agree to a mediator within 10 business days after the disputed portion of the claim has been identified in writing. If the parties cannot agree upon a mediator, each party shall select a mediator and those mediators shall select a qualified neutral third party to mediate with regard to the disputed portion of the claim. Each party shall bear the fees and costs charged by its respective mediator in connection with the selection of the neutral mediator. If mediation is unsuccessful, the parts of the claim remaining in dispute shall be subject to applicable procedures outside this section.

(C) For purposes of this section, mediation includes any nonbinding process, including, but not limited to, neutral evaluation or a dispute review board, in which an independent third party or board assists the parties in dispute resolution through negotiation or by issuance of an evaluation. Any mediation utilized shall conform to the timeframes in this section.

(D) Unless otherwise agreed to by the public entity and the contractor in writing, the mediation conducted pursuant to this section shall excuse any further obligation under Section 20104.4 to mediate after litigation has been commenced.

(E) This section does not preclude a public entity from requiring arbitration of disputes under private arbitration or the Public Works Contract Arbitration Program, if mediation under this section does not resolve the parties' dispute.

(3) Failure by the public entity to respond to a claim from a contractor within the time periods described in this subdivision or to otherwise meet the time requirements of this section shall result in the claim being deemed rejected in its entirety. A claim that is denied by reason of the public entity's failure to have responded to a claim, or its failure to otherwise meet the time requirements of this section, shall not constitute an adverse finding with regard to the merits of the claim or the responsibility or qualifications of the claimant.

(4) Amounts not paid in a timely manner as required by this section shall bear interest at 7 percent per annum.

(5) If a subcontractor or a lower tier subcontractor lacks legal standing to assert a claim against a public entity because privity of contract does not exist, the contractor may present to the public entity a claim on behalf of a subcontractor or lower tier subcontractor. A subcontractor may request in writing, either on his or her own behalf or on behalf of a lower tier subcontractor, that the contractor present a claim for work which was performed by the subcontractor or by a lower tier subcontractor on behalf of the subcontractor. The subcontractor requesting that the claim be presented to the public entity shall furnish reasonable documentation to support the claim. Within 45 days of receipt of this written request, the contractor shall notify the subcontractor in writing as to whether the contractor presented the claim to the public entity and, if the original contractor did not present the claim, provide the subcontractor with a statement of the reasons for not having done so.

(e) The text of this section or a summary of it shall be set forth in the plans or specifications for any public works project that may give rise to a claim under this section.

(f) A waiver of the rights granted by this section is void and contrary to public policy, provided, however, that (1) upon receipt of a claim, the parties may mutually agree to waive, in writing, mediation and proceed directly to the commencement of a civil action or binding arbitration, as applicable; and (2) a public entity may prescribe reasonable change order, claim, and dispute resolution procedures and requirements in addition to the provisions of this section, so long as the contractual provisions do not conflict with or otherwise impair the timeframes and procedures set forth in this section.

(h) Nothing in this section shall impose liability upon a public entity that makes loans or grants available through a competitive application process, for the failure of an awardee to meet its contractual obligations.

16.5 VENUE

16.5.1 State of California - CONTRACTOR, and any Subcontractor, Supplier and any other person or organization performing any part of WORK, agree that each of them will waive jurisdiction and venue and shall submit to the jurisdiction of the courts of the State of California, regardless of residence or domicile, with respect to any actions or suits at law or in equity arising under or related to the bidding, award or performance of the WORK.

16.5.2 County Where OWNER's Headquarters Located - CONTRACTOR, Subcontractor, Supplier or any other person or organization shall not commence any action, other than those in the State of California in the county where OWNER's Headquarters are located, against OWNER and OWNER or any of their consultants, and/or any of their respective directors, officers, employees, representatives or agents, with regard to any matter whatsoever arising out of or relating to the validity, construction, interpretation or reinforcement of the Agreement.

ARTICLE 17 -- MISCELLANEOUS

17.1 GIVING NOTICE - Whenever any provision of the Contract Documents requires the giving of written notice, it will be deemed to have been validly given if delivered in person to the individual or to a member of the firm or to an officer of the corporation for whom it is intended, or if delivered at or sent by registered or certified mail, postage prepaid, to the last business address known to the giver of the notice.

17.2 CUMULATIVE REMEDIES - The duties and obligations imposed by these General Conditions and the rights and remedies available hereunder to the parties hereto, and, in particular but without limitation, the warranties, guarantees and obligations imposed upon CONTRACTOR by the General Conditions and all of the rights and remedies available to OWNER and OWNER thereunder are in addition to, and are not to be construed in any way as a limitation of, any rights and remedies available to any or all of them which are otherwise imposed or available by laws or regulations, by special warranty or guarantee or by other provisions of the Contract Documents, and the provisions of this paragraph will be as effective as if repeated specifically in the Contract Documents in connection with each particular duty, obligation, right and remedy to which they apply.

17.3 PROFESSIONAL FEES AND COURT COSTS INCLUDED - Whenever reference is made to claims, costs, losses and damages, it shall include in each case, but not be limited to, all fees and charges of engineers, architects and other professionals and all court or arbitration or other dispute resolution costs. Attorneys' fees are specifically excluded and shall be the responsibility of each party.

17.4 RIGHT TO AUDIT

17.4.1 Owner's Right - If CONTRACTOR submits a Claim or a time and material Change Order to OWNER for additional compensation, OWNER shall have the right, as a condition to considering the Claim, and as a basis for evaluation of the Claim, and until the Claim has been settled, to audit CONTRACTOR's books to the extent they are relevant.

17.4.2 Right Includes - This right shall include the right to examine books, records, documents and other evidence and accounting procedures and practices, sufficient to discover and verify all direct and indirect costs of whatever nature claimed to have been incurred or anticipated to be incurred and for which the claim has been submitted.

17.4.3 Right To Inspect Plans - The right to audit shall include the right to inspect CONTRACTOR's plans, or such parts thereof, as may be or have been engaged in the performance of the WORK.

17.4.4 CONTRACTOR further agrees that the right to audit encompasses all subcontracts and is binding upon Subcontractors. The rights to examine and inspect herein provided for shall be exercisable through such representatives as OWNER deems desirable during CONTRACTOR's normal business hours at the office of CONTRACTOR.

17.4.5 Accounting Records - CONTRACTOR shall make available to OWNER for auditing, all relevant accounting records and documents, and other financial data, and upon request, shall submit true copies of requested records to OWNER.

17.5 ALL LEGAL PROVISIONS INCLUDED - All provisions of law required to be inserted in the Agreement or Contract Documents shall be and are inserted herein. If through mistake, neglect, oversight or otherwise, any such provision is not herein inserted or inserted in improper form, upon the application of either party, the Agreement or Contract Documents shall be changed by OWNER, at no increase in Contract Price or extension in Contract Time, so as to strictly comply with the law and without prejudice to the rights of either party hereunder.

17.6 NO CONFLICT WITH LAWS OR REGULATIONS

17.6.1 The duties, obligations, criteria or procedure imposed by these General Conditions and the rights and remedies made available are in addition to, and are not to be construed in any way as a limitation of any rights and remedies available to any or all of them which are otherwise imposed or available by laws or regulations, except that in the event that a specific part or detailed requirement of a provision, criterion or procedure in these General Conditions and a specific part or detailed requirement of a provision, criterion or procedure imposed or available by laws or

regulations are in conflict, the specific part or detailed requirement of such provision, criterion or procedure imposed or available by laws or regulations in conflict shall govern. All other specific parts or detailed requirements in the provisions, criteria or procedures of the applicable laws or regulations and these General Conditions not in conflict shall remain in full force and effect and be read with the controlling specific part or detailed requirement.

17.6.2 The provisions of paragraph 17.6 will be as effective as if repeated specifically in the Contract Documents in connection with each particular duty, obligation, right and remedy to which they apply.

- END OF GENERAL CONDITIONS –

SUPPLEMENTARY GENERAL CONDITIONS

SUPPLEMENTARY GENERAL CONDITIONS

GENERAL

These Supplementary General Conditions make additions, deletions or revisions to the General Conditions as indicated herein. All provisions which are not so added, deleted or revised remain in full force and effect. Terms used in these Supplementary General Conditions which are defined in the General Conditions have the meanings assigned to them in the General Conditions.

SGC-1 DEFINITIONS

Apparent Low Bidder - The Bidder whose Bid, having been publicly opened and read aloud, meets all the material requirements of the Bidding Documents, OWNER deems responsible in accordance with the OWNER's municipal code, and whose Bid price is the lowest received.

SGC-5.1 PERFORMANCE AND OTHER BOND AMOUNTS

CONTRACTOR shall furnish a satisfactory Performance Bond in the amount of one hundred (100) percent of the Contract Price and a satisfactory Payment Bond in the amount of one hundred (100) percent of the Contract Price.

SGC-5.2.2 **CONTRACTOR shall provide the types and amounts of insurance as set out in the Agreement:**

SGC-5.2.3 CONTRACTOR shall provide the indemnification set out in the Agreement.

SGC-6.18 SAFETY

SGC-6.18.3 CONTRACTOR shall provide a qualified on-site health and Safety representative, accepted by OWNER, with the authority to enforce all of the Safety requirements of CONTRACTOR's health and Safety program, including implementation of CONTRACTOR's injury and illness prevention program. OWNER will make a risk-based decision as to the qualification level of CONTRACTOR's Safety representative. During periods of active construction (i.e., excluding weekends, weather delays or other periods of work inactivity), CONTRACTOR must have a designated representative on the construction worksite who is knowledgeable of the Project's hazards and has full authority to act on behalf of CONTRACTOR. CONTRACTOR's designated representative must make frequent and regular inspections of the construction worksite to identify and correct any instances of noncompliance with the Project health and Safety requirements.

SGC-6.5 SUBCONTRACT LIMITATIONS

In addition to the provisions of Paragraph 6.5 of the General Conditions, CONTRACTOR shall perform not less than twenty (20) percent of the WORK with its own forces (i.e., without subcontracting). The twenty (20) percent requirement shall be understood to refer to the WORK, the value of which totals not less than twenty (20) percent of the Contract Price.

SGC-11.3.4 EQUIPMENT RENTAL RATES

CONTRACTOR will be paid for the use of equipment at the rental rate listed for such equipment specified in the current edition of the following reference publication:

A. "Rental Rate Blue Book" as published by Dataquest (a company of the Dunn and Bradstreet Corporation), 1290 Ridder Park Drive, San Jose, CA 95131, telephone number (408) 437-8000 or outside of California (800) 669-3282

SGC-12.5 INCLEMENT WEATHER DELAYS

CONTRACTOR's construction schedule shall be based upon the inclusion of five (5) Days of inclement weather delays.

An inclement weather delay is defined as a delay caused by inclement weather which prevents CONTRACTOR from working on the controlling item in CONTRACTOR's construction schedule. Should CONTRACTOR experience inclement weather delays over the course of contract duration in excess of the number of Days outlined above, CONTRACTOR shall be granted a time extension in accordance with the provisions outlined in Article 12 of the General Conditions. The time extension shall be based on the number of inclement weather Days in excess of the number of Days outlined above.

SGC-14.13 LIQUIDATED DAMAGES

SGC-14.13.3 OWNER and CONTRACTOR recognize that time is of the essence of this Agreement and that OWNER will suffer financial loss if the WORK is not completed within the time specified in Article 2 herein, plus any extensions thereof allowed in accordance with Article 12 of the General Conditions. They also recognize the delays, expense and difficulties involved in proving in a legal proceeding the actual loss suffered by OWNER if the WORK is not completed on time. Accordingly, instead of requiring any such proof, OWNER and CONTRACTOR agree that as liquidated damages for delay (but not as a penalty) CONTRACTOR shall pay one thousand dollars ($1,000) for every working Day that expires in excess of the time specified for final completion of the WORK.

END OF SUPPLEMENTARY GENERAL CONDITIONS

CITY OF EL CENTRO

TECHNICAL SPECIFICATIONS

For the
Construction of

WASTEWATER TREATMENT PLANT UV DISINFECTION IMPROVEMENTS

JUNE 2024

NV5, Inc.

TECHNICAL SPECIFICATIONS
CITY OF EL CENTRO
WASTEWATER TREATMENT PLANT
UV DISINFECTION IMPROVEMENTS

TABLE OF CONTENTS

June 2024

DIVISION 1 – GENERAL REQUIREMENTS

SECTION 01010 SUMMARY OF WORK

SECTION 01043 COORDINATION WITH CITY OPERATIONS

SECTION 01048 SPECIAL CONDITIONS AND PROCEDURES

SECTION 01060 PERMITS AND OTHER AGENCY REQUIREMENTS

SECTION 01090 REFERENCE STANDARDS

SECTION 01170 SPECIAL TECHNICAL PROVISIONS

SECTION 01300 SUBMITTALS

SECTION 01310 PROGRESS SCHEDULE

SECTION 01380 PRECONSTRUCTION VIDEOS AND PHOTOGRAPHS

SECTION 01510 TEMPORARY CONSTRUCTION FACILITIES

SECTION 01545 PROTECTION OF WORK AND PROPERTY

SECTION 01550 SITE ACCESS AND STORAGE

SECTION 01560 TEMPORARY ENVIRONMENTAL CONTROLS

SECTION 01700 PROJECT CLOSEOUT

DIVISION 2 – SITE WORK

SECTION 02050 DEMOLITION

SECTION 02100 SITE PREPARATION

SECTION 02140 DEWATERING

SECTION 02160 EXCAVATION SUPPORT SYSTEMS

SECTION 02200 EARTHWORK

SECTION 02270 EROSION, SEDIMENTATION AND DUST CONTROL

DIVISION 3 – CONCRETE

SECTION 03100 CONCRETE FORMWORK

SECTION 03200 CONCRETE REINFORCEMENT

SECTION 03251 CONCRETE JOINTS

SECTION 03300 CAST IN PLACE CONCRETE

SECTION 03490 PRE-CAST CONCRETE TRENCH

SECTION 03600 GROUT

DIVISION 5 – METALS

SECTION 05500 MISCELLANEOUS METALS

SECTION 05503 ANCHOR BOLTS, ADHESIVE ANCHORS, EXPANSION ANCHORS AND CONCRETE INSERTS

DIVISION 7 – THERMAL AND MOISTURE PROTECTION

SECTION 07900 SEALANTS AND CAULKING

DIVISION 9 - FINISHES

SECTION 09800 PROTECTIVE COATING

DIVISION 10 – SPECIALTIES

SECTION 10441 WARNING SIGNS

DIVISION 11 – EQUIPMENT

SECTION 11000 EQUIPMENT GENERAL PROVISIONS

SECTION 11001 GENERAL REQUIREMENTS FOR EQUIPMENT

SECTION 11002 EQUIPMENT MOUNTING

SECTION 11010 ULTRAVIOLET DISINFECTION SYSTEM

DIVISION 13 – SPECIAL CONSTRUCTION

SECTION 13121 PRE-ENGINEERED BUILDING

DIVISION 16 – ELECTRICAL

SECTION 16010 BASIC ELECTRICAL REQUIREMENTS

SECTION 16050 BASIC ELECTRICAL MATERIALS AND METHODS

SECTION 16060 GROUNDING AND BONDING FOR ELECTRICAL SYSTEMS

SECTION 16120 CONDUCTORS

SECTION 16130 RACEWAY AND BOXES

SECTION 16140 WIRING DEVICES

SECTION 16499 COMMISSIONING OF ELECRICAL SYSTEMS

APPENDIX A – TrojanUV Layout Drawings, Revision D (3 sheets)

APPENDIX B - TrojanUV Submittal, Revision C (852 pages)

APPENDIX C – Preliminary Geotechnical Investigation, Proposed Bar Screen Structure, May 2017 (64 pages)

SECTION 01010

SUMMARY OF WORK

PART 1 - GENERAL

1.1 PROJECT LOCATION

A. The project is located at the El Centro Wastewater Treatment Plant in El Centro, CA. Refer to the Contract Drawings for actual locations.

1.2 WORK COVERED BY CONTRACT DOCUMENTS

A. The Work to be performed under this Contract consists of furnishing all labor, tools, transportation, equipment, and materials in strict accordance with construction drawings, titled "UV Disinfection Improvements" dated June 2024, and these specifications, all of which are made a part hereof.

1.3 BID PROPOSAL

This section defines the Lump Sum Prices and Unit Prices listed in the Bid Schedule, and the manner in which they will be used to determine measurement and payment for all items included in the Bid Schedule. Parts 2 and 3 of this section describe the procedures required to be followed for monthly progress payments to the Contractor.

Payment for all items of the Bid Schedule whether lump sum or unit price shall include all compensation to be received by the Contractor for furnishing all tools, equipment, supplies, and manufactured articles, and for all labor, operations, and incidentals appurtenant to the items of Work being described, as necessary to complete the various items of the Work all in accordance with the requirements of the Contract Documents, including all appurtenances thereto, and including all costs of permits and cost of compliance with the regulations of public agencies having jurisdiction, including Safety and Health Requirements of the California Division of Industrial Safety and the Occupational Safety and Health Administration of the U.S. Department of Labor (OSHA). No separate payment will be made for any item that is not specifically set forth in the Bid Schedule, and all costs shall be included in the prices named in the Bid Schedule for the various items of Work. Work required for which no separate bid item is identified will be considered as a subsidiary obligation of the Contractor, and the cost therefore shall be included in the most applicable bid item.

Compensation for completion of the Work will be determined by the use of the cost loaded CPM schedule (reference Section 01310) and the Schedule of Values. Unit Priced Bid Item amounts will be used to make adjustments to the contract amount when Work is completed, and actual quantities are established. Final payment for Work covered by Unit Prices will be made on the basis of the actual measured quantities.

A. Bid Item No. 1 – Mobilization / Demobilization: LS

The Contract Lump Sum Price shall include, but not be limited to, the following principal items: mobilizing labor force; securing construction water supply; obtaining permits including the preparation of any applications and documents necessary for obtaining a permit; obtaining bonds; moving equipment and construction facilities onto site including sanitary facilities; maintaining a staging area; security; posting of all required notices and signage; safety; shop drawing submittals; CPM schedule; videography, photography, proper cleaning and clearance of the site to return it to its original condition; and removal of all Contractor equipment, supplies, and labor force; warranty provisions; payments for bonds, and obtaining insurance.

The price of this Bid Item shall not exceed 10% of the total base bid. Up to 25% of this Bid Item may be paid upon start of construction. Up to 50% of the Bid Item may be paid when 50% of the construction is completed, as determined by the City's Representative. The remaining 25% shall be paid upon completion of the project.

B. BID ITEM NO. 2 – Sheeting, Shoring, and Bracing: LS

The Contract Lump Sum Price shall include, but not be limited to, the following principal items: provide the labor, material and equipment to furnish and install all temporary sheeting, shoring, and bracing required by the Contract Documents and/or site conditions. Sheeting, shoring, and bracing shall include all planning, design, engineering fees (including designer inspection and certification of installation), furnishing and construction, removal and disposal of such temporary sheeting, shoring and bracing, complete as required under the provisions of any permits and in accordance with the requirements of CAL-OSHA and the Construction Safety Orders of the State of California, pursuant to the provisions of Section 6707 of the California Labor Code.

C. BID ITEM NO. 3 – Temporary BMPs: LS

The Contract Lump Sum Price shall include, but not be limited to, the following principal items: provide the labor, material and equipment to furnish and install temporary Best Management Practices (BMPs) to avoid and reduce pollutants in storm water runoff including but not limited to site management and housekeeping BMPs; control of equipment, stockpiles, and/or staging areas from stormwater runoff and wind; trash control; containing leaks and spills; street sweeping; implementing, maintaining, inspecting, and updating erosion and sediment control BMPs and other requirements per City of El Centro requirements; any additional BMPs as required by the City to comply with the City's BMP Manual; construction water in accordance with Specification Section 01510; removal and disposal of any BMPs after the completion of the on-site construction Work; and all appurtenant materials and work in accordance with the contract documents.

D. BID ITEM NO. 4 – Demolition: LS

The Contract Lump Sum Price shall include, but not be limited to the following principal items: all labor, materials and equipment for the demolition, removal, disposal, or salvage of items, facilities, or appurtenances as indicated on the Contract Drawings, including but not limited to the transportation and delivery to a permitted disposal facility; dewatering, removal of sludge, disposal, and cleaning of the existing UV channels; control of nuisance water; and all appurtenant materials and work in accordance with the contract documents.

E. BID ITEM NO. 5 – Earthwork and Grading: LS

The Contract Lump Sum Price shall include, but not be limited to the following principal items: all labor, materials, and equipment for clearing, grubbing, stripping, earthwork, excavation, backfilling, compacting, compaction testing, and grading; and all appurtenant materials and work in accordance with the contract documents.

F. BID ITEM NO. 6 – Construct Concrete Slabs: LS

The Contract Lump Sum Price shall include, but not be limited to the following principal items: all labor, materials, and equipment for constructing all reinforced concrete slabs as indicated on the Contract Drawings; and all appurtenant materials and work in accordance with the contract documents.

G. BID ITEM NO. 7 – Construct Miscellaneous Concrete: LS

The Contract Lump Sum Price shall include, but not be limited to the following principal items: all labor, materials, and equipment for constructing all miscellaneous concrete as indicated on the Contract Drawings including reinforced concrete beams, reinforced concrete channel reduction baffles, reinforced concrete ramps; and all appurtenant materials and work in accordance with the contract documents.

H. BID ITEM NO. 8 – Furnish and Install Precast Concrete Trenches: LS

The Contract Lump Sum Price shall include, but not be limited to the following principal items: all labor, materials, and equipment for furnishing and installing precast concrete trenches as indicated on the Contract Drawings including shop drawings, removable covers, divider assemblies, and crushed rock bedding; and all appurtenant materials and work in accordance with the contract documents.

I. BID ITEM NO. 9 – Furnish and Install Pre-Engineered Buildings: LS

The Contract Lump Sum Price shall include, but not be limited to the following principal items: all labor, materials, and equipment for designing, fabricating, furnishing, and installing two (2) pre-engineered metal buildings as indicated on the Contract Drawings including shop drawings, structural calculations, doors, windows, hardware, electrical panels, lighting, receptacles, HVAC units, disconnect switches, conduits, wireways,

factory inspection and testing, and anchorage; and all appurtenant materials and work in accordance with the contract documents.

J. BID ITEM NO. 10 – Furnish and Install Level Control Weirs: LS

The Contract Lump Sum Price shall include, but not be limited to the following principal items: all labor, materials, and equipment for furnishing and installing two (2) level control weirs as indicated on the Contract Drawings including field verification, shop drawings and anchorage; and all appurtenant materials and work in accordance with the contract documents.

K. BID ITEM NO. 11 – Furnish and Install FRP Covers and FRP Grating: LS

The Contract Lump Sum Price shall include, but not be limited to the following principal items: all labor, materials, and equipment for furnishing and installing fiberglass reinforced plastic (FRP) channel covers and FRP channel grating as indicated on the Contract Drawings; and all appurtenant materials and work in accordance with the contract documents.

L. BID ITEM NO. 12 – Install UV Disinfection System: LS

The Contract Lump Sum Price shall include, but not be limited to the following principal items: all labor, materials, and equipment for installing the Ultraviolet (UV) Disinfection System and appurtenances indicated on the Contract Drawings and Specification Section 11010, including coordination with the Manufacturer, transporting and handling materials and equipment supplied by the Manufacturer, furnishing materials and equipment not provided by the Manufacturer but are necessary for the work, and assisting the Manufacturer with start-up, field testing, and operator training; and all appurtenant materials and work in accordance with the contract documents.

M. BID ITEM NO. 13 – Electrical and Controls Work: LS

The Contract Lump Sum Price shall include, but not be limited to the following principal items: all labor, materials, and equipment for constructing all electrical, controls, and communications work indicated on the Contract Drawings; and all appurtenant materials and work in accordance with the contract documents.

PART 2 - MEASUREMENT AND PAYMENT

2.1 GENERAL PROGRESS PAYMENT REQUIREMENTS

A. Payment for Work performed shall be in accordance with the Cost Loaded CPM. The City's Representative will verify measurements and quantities. Each activity necessary to manage and complete the Work is identified on the contract schedules. Each activity will be assigned its respective value, a portion of the contract price, as shown on the Summary of Values.

B. Payment for all lump sum costs and services incurred on this Contract shall be based on the earned value of Work accomplished during the reporting period. Earned value is determined by the completion percentage of each activity applied to the total value of the activity. No construction activity shall be deemed 100% complete until the Contractor has completed the physical check out and inspection of the completed Work and has submitted the signed inspection form to the City's Representative.

C. Unit price items will be paid based on quantities (or equivalent quantities) installed.

D. Earned value is derived from the current status of the Contractor Construction Schedule as determined by the monthly schedule status submittals (Reference Section 01310). Each schedule status submittal is reviewed and approved by the City's Representative prior to the Contractor obtaining approval for the Summary of Earned Values or quantities installed and the Application for Payment.

E. The Contractor shall not take advantage of any apparent error or omission on the Drawings or Specifications, and the City's Representative shall be permitted to make corrections and interpretations as may be deemed necessary for fulfillment of the intent of the Contract Documents at no additional cost to the City.

F. The retainage specified in the General Conditions shall apply to all payments to the Contractor including permits and mobilization.

2.2 APPLICATION FOR PAYMENT

A. Application for payment shall be on the City's form provided by the City's Representative and certified by signature of an Authorized Officer of the Contractor. Two (2) copies of the application for payment shall be submitted. Application shall be made monthly.

B. The Application for Payment contains all necessary references and attachments that substantiate the invoice for progress payment, (e.g., certified payrolls, labor reports, progress schedule data, and Summary of Earned Values). It must be preceded or accompanied by schedule and status data in accordance with Section 01310.

C. The Application for Payment is submitted according to the format and instructions provided by the City's Representative and is based on Work completed through the last day of the previous month or through the date established by the City's Representative.

PART 3 - EXECUTION

3.1 MONTHLY REVIEWS/APPLICATION FOR PAYMENT

A. Monthly review meetings between the Contractor and the City's Representative will be held within 7 days prior to the payment application date designated by the City's Representative. Prior to the monthly review meeting, the Contractor shall submit an updated schedule and a signed application for payment showing a Summary of Earned

Values for the reporting and payment period so that the City's Representative can compare earned values to available status data. As part of the pay application process, the Contractor shall make any adjustments to the Master Record Documents, updated schedule, and payment applications deemed necessary. Upon completion of the adjustments, the City's Representative will sign the payment request and forward it to the City. The City's Representative will determine payment amounts if agreement with the Contractor is not reached.

3.2 PAYMENT FOR PRODUCTS STORED ON SITE

A. The Contractor may request payment for products (material and/or equipment) which will be incorporated into the Work and which are delivered and stored on-site. Payments for products stored at the site shall be based upon the cost of all acceptable materials and equipment not incorporated in the Work but delivered and suitably stored at the site; provided each such individual item has a value of more than $5,000 and will become a permanent part of the Work. The Application for Payment shall also be accompanied by a bill of sale, invoice, or other documentation warranting that the Contractor has received the materials and equipment free and clear of all liens, charges, secured interests, and encumbrances and evidence that the materials and equipment are covered by appropriate property insurance as specified in the insurance provisions and other arrangements to protect the City's interest.

END OF SECTION

SECTION 01043

COORDINATION WITH CITY OPERATIONS

PART 1 - GENERAL

1.1 MAINTAINING OPERATION OF EXISTING FACILITIES

A. The Contractor will be performing work contained in these drawings and specifications. Under these conditions, precautions will be necessary to assure that no damage or unscheduled shutdowns occur to any facilities, including piping, utilities, roads, and structures, that are to remain in operation and are not to be modified or replaced. Any temporary facilities, materials, equipment and labor required to achieve this objective shall be provided by the Contractor at his own expense. At the completion of work, all such temporary facilities, materials and equipment remaining shall be removed from the work area.

B. Regarding connection to existing buried piping and facilities part of the Work, it shall be the responsibility of the Contractor to uncover and verify their locations, elevations, materials, and dimensions prior to beginning construction or fabrication of any new materials or facilities which are dependent on the location of existing facilities.

1.2 ORDER OF THE WORK

A. The work to be completed at each project location as defined in the Contract Documents shall be completed in an order or precedence as may be required by the Contractor to expedite the completion of the project, but not without due consideration of the City's operations and approval. Work shall be in accordance with the sequence of work included in the Contract Drawings and as described in Paragraph 1.5 of this section. After work has begun on any portion or designated part of the project, it shall be carried forward to its final completion. The City has the right to change the precedence of work as needed to maintain the City's operation.

1.3 SHUTDOWNS

A. Any proposed shutdowns must be indicated on the Contractor's preliminary schedule to be submitted for review by the City and Engineer at the Pre-Construction Conference. The actual allowable durations of the shutdowns will be determined during the preparation of the detailed construction schedule, unless otherwise noted in the plans and/or these specifications.

B. The Contractor shall compile a detailed list of all items of work, which must be accomplished during any shutdown. The Contractor shall coordinate his work to minimize the required number of shutdowns by accomplishing as many tasks as possible during each shutdown period.

C. The Contractor shall submit a list of items to the Engineer for his review as a part of the construction schedule defined within Section 01300. The schedule shall indicate all periods and duration of each proposed shutdown and the items of work that will be accomplished.

D. The Contractor shall make specific written requests for all shutdowns ten (10) working days in advance of the proposed shutdown for review and approval by the City.

E. The written request shall include a complete detailed plan of the Contractor's proposed activities including schedule, manpower, equipment, materials and methods that will be utilized to perform the required work during the proposed shutdown.

F. Should the City determine that the Contractor’s proposed plan is insufficient to successfully complete the required work during the period of the shutdown, the Contractor shall make the appropriate revisions in his proposed plan to the satisfaction of the City. The City has right to change date and time of requested shutdown. The City also has the right to perform work associated with the shutdown. The Contractor shall credit the City for any work not performed as bid.

G. All materials and equipment (including emergency equipment) necessary to expedite the tie-in shall be on hand prior to the shutdown of existing services or utilities.

H. At no time shall the Contractor operate any system equipment or take any other action which would affect the operation of the existing system, except as specifically required by the drawings and after approval is granted by the City.

I. The Contractor shall plan all work such that it can be completed with minimal disruption of the existing facilities operation. Prior to the start of any work, Contractor shall coordinate with the City to develop an approved schedule that will allow for a continued normal operation of all existing facilities. It may be necessary to do certain parts of the construction work outside normal working hours in order to avoid undesirable conditions or as required by applicable permits. The Contractor shall do this work at such times and at no additional cost to the City.

J. Work on existing structures and facilities shall be performed on a schedule and in a manner that will permit the existing facility to operate continuously, unless otherwise approved in writing by the City of the existing utility and/or facility affected.

1.4 CONSTRUCTION PHASING

A. Prior to commencement of work, the Contractor shall submit to the City and Engineer for review and approval a detailed staging plan describing the sequencing of the installation, operation, and removal of all temporary and permanent facilities as required to complete the work as shown on the Contract Documents. The staging plan shall at a minimum include the following information:

1. Schematic and written description of each phase of work including testing and final connections.

2. Location and details of any temporary facilities including but not limited to temporary power and temporary controls.

3. Required shutdowns and operations by City.

4. Schedule including activity durations.

B. At least one UV disinfection unit must be in service at all times during construction, except during City-approved shutdowns. The Contractor shall adhere to the following phasing constraints unless approved otherwise by the City.

1. **Phase I (South UV Unit):** Shutdown and remove the existing south UV disinfection unit located in the south UV channel and install the new south UV disinfection unit and all appurtenant work. The new south UV disinfection unit shall be tested, commissioned, and shall be fully operational prior to Phase II work.

2. **Phase II (North UV Unit):** Shutdown and remove the existing south UV disinfection unit located in the north UV channel and install the new north UV disinfection unit and all appurtenant work.

PART 2 - PRODUCTS (NOT USED)

PART 3 - EXECUTION (NOT USED)

** END OF SECTION **

This page left blank intentionally

SECTION 01048

SPECIAL CONDITIONS AND PROCEDURES

PART 1 - GENERAL

1.1 SCOPE

A. This section covers special construction conditions and procedures associated with this construction contract.

1.2 REQUIREMENTS COVERED IN OTHER SPECIFICATION SECTIONS

A. General Conditions

B. Section 01170 – Special Technical Provisions

C. Section 01510 – Temporary Construction Facilities

D. Section 01560 – Temporary Environmental Controls

1.3 SANITARY ARRANGEMENTS

A. The Contractor shall be responsible for providing sanitation facilities for his employees and shall fully comply with the rules and regulations of the State Board of Health and/or other bodies having jurisdiction.

B. The Contractor shall, at all times, provide for his employees abundant supply of safe drinking water and shall give orders against the use of, for drinking purposes, any water in the vicinity of the work known to be unsafe.

C. The Contractor shall provide suitable and conveniently located temporary toilets for use by his forces. They shall be left at the site until final inspection has been made.

1.4 NORMAL WORK SCHEDULE

A. Contractor shall conduct all work within the following City-approved schedule:

1. Normal Work Hours: 8:00 AM to 5:00 PM or as directed by any issued permits

2. Normal Work Days: Monday through Friday

B. Exceptions to this work schedule shall be only as approved in writing by the City per Paragraph 1.5 below.

1.5 SATURDAY, SUNDAY, HOLIDAY AND NIGHT WORK

A. No work shall be done outside normal work hours and normal work days, except such work as is necessary for the proper care and protection of the work already performed, or except in case of emergency, and in any case only with the written notice of the City.

B. It is understood, however, that night work may be authorized if the Contractor first obtains the written notice from the City, and that such notice may be revoked at any time by the City if the Contractor fails to maintain at night adequate force and equipment for reasonable prosecution and to justify inspection of the work.

1.6 MITIGATION MEASURES

A. The Contractor shall not operate noisy or otherwise irritating construction equipment except during normal working hours, as defined in Paragraph 1.4 above.

B. The Contractor shall employ dust control measures to the satisfaction of the City throughout the duration of the project.

1.7 COOPERATION WITH OTHER CONTRACTORS

A. The City may have additional work performed at project sites by other contractors. The contract requires cooperation with those contractors in the area. Any difference or conflict, which may arise between the Contractor and other contractors, shall be adjusted and determined by the City. The Contractor shall conduct his operations as to interfere to the least possible extent with the work being done by other contractors. The Contractor shall make good, promptly, any injury or damage to other contractor's work caused at his hands and at his own expense, and no additional allowance will be made therefor.

1.8 PUBLIC UTILITIES

A. Location of utilities shown on the plans are based upon the available records at the time of preparation of the plans. No guarantee is made to the accuracy or completeness of the existing utilities shown thereon. The Contractor shall cooperate with the utility companies' representative in order to ascertain the location of the utility lines ahead of trenching operations. When the exact location of a utility becomes doubtful, the Contractor shall excavate and expose the utility ahead of trenching operations in order that the Engineer may adjust the alignment of the facility if necessary to provide the least amount of interference with the utility.

1.9 COMPACTION TESTING

A. The Contractor shall retain and pay for the services of a compaction testing firm to perform compaction testing. The Contractor shall pay the costs of any work required to achieve the specified compaction and costs for re-testing of work not conforming to the specifications.

1.10 PRE-CONSTRUCTION CONFERENCE

A. A pre-construction conference shall be held prior to the commencement of construction of the work herein defined and all understandings, interpretations and agreements reached at said conference shall be reduced to writing by the City and mailed to all parties attending said pre-construction conference. The understanding, interpretations and agreements set forth herein shall hereinafter be considered as a part of the Contract Documents.

1.11 STANDARDIZATION AND UNIFORMITY OF EQUIPMENT AND CERTAIN MATERIALS

A. All materials shall be selected from the City Approved Materials List.

B. To ensure standardization and uniformity in all parts of the work under this Contract, like items of new (i.e., non-salvaged) equipment shall be the products of one manufacturer. Like items of certain materials shall be the products of one manufacturer. Materials, equipment, and appliances shall be current models now in production.

C. Uniformity in like equipment items is required in order to provide the City with inter-changeability capabilities, simplified spare parts inventory, and standardized maintenance programs and manufacturers' services.

D. Standardization requirements shall be as specified in the various technical sections.

E. Generally, material items exempt from standardization include reinforcing steel, sheet metal, materials specified only by reference to a recognized standard, and items hidden from view where inter-changeability, color, and texture is not a significant factor for standardization.

F. The Contractor shall inform his suppliers and subcontractors of these requirements, and shall provide the necessary coordination to accomplish the standardization specified.

1.12 COMPLIANCE WITH STATE SAFETY CODES

A. All necessary protective devices shall be provided as specified and/or required by the State of California Division of Industrial Safety and the Occupational Safety and Health Administration. It is assumed that all fabricators, electrical and machinery manufacturers and other equipment suppliers are conversant with such regulations and they shall be responsible for the industrial safety aspects of such equipment. All equipment shall comply with all rules and regulations of the Safety Orders of the State of California Division of Industrial Safety and all local building, plumbing, and electrical codes and ordinances. Safety guards shall be galvanized and painted after fabrication and shall be easily removed to permit inspection, removal and repair of the moving parts.

1.13 FIELD TESTS, ADJUSTMENTS AND OPERATION

A. All equipment installed by the Contractor shall be operated and tested by the Contractor per the specifications. Tests shall be made to determine whether the equipment has been properly assembled, aligned, adjusted, and connected. Any changes, adjustments or replacements of equipment that are due to errors or omissions on the part of the contractor shall be done at his own expense.

1.14 ASBESTOS MATERIALS

A. Health Hazard

The Contractor is warned that asbestos is a known human carcinogen when inhaled and poses serious health risks. Asbestos fibers are easily inhaled and can result in chronic respiratory illness, cancer and other severe adverse health effects.

B. General

The Contractor is hereby advised that the Work includes the handling, demolition, disposal, and connection to existing asbestos cement pipe as indicated on the Contract Drawings. Removal of existing asbestos material shall be performed by a contractor registered by CALOSHA and certified by the State Contractors Licensing Board for asbestos removal. Copies of the certification shall be submitted to the Engineer prior to the commencement of any asbestos removal activities. The contractor or subcontractor shall comply with all State and Federal laws regarding handling and removal of asbestos materials. The Contractor shall be responsible for the proper identification, and payment for removal and disposal of all asbestos materials.

C. Joining Existing Asbestos Cement Pipe

In the specific instance of making piping connections to existing asbestos cement pipe, the Contractor shall construct the connection as indicated on the Contract Drawings. The Contractor shall perform all cutting of the asbestos cement pipe in strict conformance with all applicable CALOSHA, EPA and governing health agency requirements.

D. Cutting and Handling Asbestos Cement Pipe

The Contractor shall perform all cutting and handling of asbestos cement pipe in strict conformance with all applicable CALOSHA, EPA and governing health agency requirements. The Contractor shall provide sufficient supervision and monitoring to assure said conformance.

1.15 RESPONSIBILITY FOR JOB SITE CONDITIONS

A. Contractor agrees that he shall assume sole and complete responsibility for job site conditions during the course of construction of this project, including safety of all persons and property; that this requirement shall apply continuously and not be limited to normal working hours; and that the Contractor shall defend, indemnify and hold the City and the design consultant harmless from any and all liability except for that arising from the sole negligence of the City.

It is the Contractor's sole responsibility to protect the safety of employees from construction-related conditions or activities.

1.16 CLIMATE AND SITE CONDITIONS

Equipment manufacturers shall make all necessary changes in the equipment to assure that it is suited for the climatic conditions at the site. The site conditions are as follows:

Elevation:	-50-feet to -45-feet MSL
Minimum Ambient Design Temperature:	35° F
Maximum Ambient Design Temperature:	120° F
Climate: Outdoor installation	

PART 2 - PRODUCTS (Not Applicable)

PART 3 - EXECUTION (Not Applicable)

** END OF SECTION **

This page left intentionally blank.

SECTION 01060

PERMITS AND OTHER AGENCY REQUIREMENTS

PART 1 - GENERAL

1.1 WORK OF THIS SECTION

The Work of this Section shall include, but not be limited to, compliance with all regulatory agencies, jurisdictional agencies, and permit requirements for the Work shown in the Approved Plans and described in the Contract Documents.

1.2 RELATED WORK SPECIFIED ELSEWHERE

The Work of the following Sections also applies to the Work of this Section. Other Sections, not referenced below, shall also apply to the extent required for proper performance of this Work.

1. General Conditions
2. Section 01300 – Submittals
3. Section 01510 – Temporary Construction Facilities

1.3 GENERAL

The Contractor shall be responsible for obtaining all local, state, or federal permits required to perform the work. The City shall pay for the permit fees, unless noted otherwise. All required permits are hereby made a part of these specifications, and all requirements shall be met solely and fully by the Contractor. All costs incurred due to permit requirements shall be met solely and fully by the Contractor. The Contractor shall provide a copy of all permits to the City's Representative prior to performing the work requiring the permit. The lists below contain permits and/or fees identified but shall not be considered as all inclusive. The Contractor shall be responsible for completing the lists below and complying with all local, state, and federal laws, ordinances, etc.

A. The Contractor shall obtain the following permits:
   1. City of El Centro Building Permit

1.4 COORDINATION

A. GENERAL

The Contractor shall refer to the General Conditions, Section 01048, and applicable permits for work hours and special requirements. The Contractor shall coordinate with the City to submit advance notice to each entity prior to construction, minimum of one-month notice shall be provided to private property owners, special care facilities, and emergency service providers.

PART 2 - MATERIALS (NOT USED)

PART 3 - EXECUTION (NOT USED)

** END OF SECTION *

SECTION 01090

REFERENCE STANDARDS

PART 1 - GENERAL

1.101 THE REQUIREMENT

A. Wherever reference is made to any published standards, codes, or standard specifications, it shall mean the latest standard code, specification, or tentative specification of the technical society, organization, or body referred to, which is in effect at the date of invitation for Bids.

B. All materials, products, and procedures used or incorporated in the work shall be in strict conformance with applicable codes, regulations, specifications, and standards.

C. A partial listing of codes, regulations, specifications, and standards includes the following:

American Architectural Manufacturers Association (AAMA)

American Concrete Institute (ACI)

American Hot Dip Galvanizers Association (AHDGA)

American Institute of Steel Construction, Inc. (AISC)

American Iron and Steel Institute (AISI)

American National Standards Institute (ANSI)

American Society of Civil Engineers (ASCE)

American Society of Mechanical Engineers (ASME)

American Society for Testing and Materials (ASTM)

American Standards Association (ASA)

American Water Works Association (AWWA)

American Welding Society (AWS)

Building Officials and Code Administrators (BOCA)

Consumer Product Safety Commission (CPSC)

Factory Mutual (FM)

Federal Specifications

Instrument Society of America (ISA)

Institute of Electrical and Electronics Engineers (IEEE)

National and Local Fire Codes

National Fire Protection Association (NFiPA)

Regulations and Standards of the Occupational Safety and Health Act (OSHA)

San Diego Water Agencies' Standards (WAS)

Southern Building Code Congress International, Inc. (SBCCI)

Standard Building Code

Standard Mechanical Code

Standard Plumbing Code

Standard Specifications for Public Works Construction (SSPWC, or "Greenbook")

Uniform Building Code (UBC)

Underwriters Laboratories Inc. (UL)

D. Contractor shall, when required, furnish evidence satisfactory to the Engineer that materials and methods are in accordance with such standards where so specified.

E. In the event any questions arise as to the application of these standards or codes, copies shall be supplied on-site by the Contractor.

PART 2 -- PRODUCTS (NOT USED)

PART 3 -- EXECUTION (NOT USED)

** END OF SECTION *

SECTION 01170

SPECIAL TECHNICAL PROVISIONS

PART 1 - GENERAL

1.1 RELATED SECTIONS

A. General Conditions
B. Section 01043 – Coordination with City Operations.

1.2 CONSTRUCTION SURVEYS

A. LAND MONUMENTS

The Contractor shall notify the Engineer of any existing Federal, State, City, County, and private land monuments encountered. Private monuments shall be preserved or replaced by a California licensed surveyor at the Contractor's expense. Appropriate record of survey drawings shall be filed with the County of Imperial or the City of El Centro for all replaced monuments. When government monuments are encountered, the Contractor shall notify the Engineer at least two (2) weeks in advance of the proposed construction in order that the Engineer will have ample opportunity to reference these monuments for later replacement.

1.3 SUBSURFACE INVESTIGATION

A. A geotechnical investigation was performed for another project near the project site with a report entitled Preliminary Geotechnical Evaluation, City of El Centro, Wastewater Treatment Plant, Proposed Bar Screen Structure, El Centro, California. See APPENDIX C.

1.4 DIFFERING SUBSURFACE CONDITIONS

A. In the event subsurface or latent physical conditions are found materially different from those indicated in these documents and differing materially from those ordinarily encountered and generally recognized as inherent in the character of work covered in these Contract Documents, the Contractor shall promptly, and before such conditions are disturbed, notify the City's Representative in writing of such changed conditions.

B. The City's Representative will investigate such conditions promptly and following this investigation, the Contractor shall proceed with the work, unless otherwise instructed by the City's Representative. If the City's Representative finds that such conditions do so materially differ and cause an increase or decrease in the cost of, or in the time required for performing the work, the City's Representative will recommend to the City the amount of adjustment in cost and

time he considers reasonable. The City will make the final decision on all Change Orders to the Contract regarding any adjustment in cost or time for completion.

1.5 LOCATION OF WORK

A. The specific project location of the construction site is indicated on the Drawings.

B. The City will provide the Contractor with a lay down and storage area near the project site within the Wastewater Treatment Plant.

C. Security will not be provided by the City for the Contractor's materials, tools and equipment lay down or storage area. The storage of said materials, tools and equipment shall be at the sole risk of the Contractor.

1.6 CONSTRACTOR WORK AREA

A. EXISTING UTILITIES

1. Underground Utilities

   a) Known underground utilities and structures adjacent to or encountered in the work are shown on the Drawings. The locations shown are taken from existing records and the best information available from existing utility plans; however, it is expected that there may be some discrepancies and omissions in the locations and the quantities of utilities and structures shown.

   b) The Contractor shall call Underground Service Alert; toll free, at 811 or 1-800-422-4133, two (2) working days prior to any type of excavation.

2. Above Ground Utilities

   a) Stay at least ten feet (10') away from any power lines when operating cranes or other boom-type equipment around overhead lines.

B. SHUTDOWN OF EXISTING OPERATIONS OR UTILITIES

1. Continuous operation of the City's wastewater treatment system is of critical importance. Refer to Specification Section 01043, Coordination with City Operations.

2. Tie-in to existing services or utilities, or for other work that requires the temporary shutdown of any existing operations or utilities shall be planned in detail with appropriate scheduling of the work and coordinated with the

City. The approved schedule for shutdown or restart shall be indicated on the Contractor's Progress Schedule, and advance notice shall be given in order that the City may witness the shutdown, tie-in, and startup.

3. All materials and equipment (including emergency equipment) necessary to expedite the tie-in shall be on hand prior to the shutdown of existing services or utilities.

4. At no time shall the Contractor operate any City equipment or take any other action which would affect the operation of the existing system, except as specifically required by the Drawings and after approval is granted by the City. Request approval ten (10) working days in advance of the time that interruption of the existing system is required.

5. The Contractor shall plan the work and carry it out with minimum interference to the operation of the existing facilities. Prior to starting the work, confer with the Engineer to develop an approved work schedule, which will permit the facilities to function normally as practical. It may be necessary to do certain parts of the construction work outside normal working hours in order to avoid undesirable conditions. The Contractor shall do this work at such times and at no additional cost to the City.

6. Work on existing structures and facilities shall be performed on a schedule and in a manner that will permit the existing facility to operate continuously, unless otherwise approved in writing by the owner of the existing utility and/or facility affected.

1.7 CONSTRUCTION SURVEYS

A. The Contractor shall visit the site of work and shall familiarize himself with all conditions that may in any manner affect his work. No allowances will be subsequently made for the failure of the Contractor to have examined the site of work.

B. The Contractor acknowledges that he has satisfied himself as to the nature and location of the work, the general and local conditions, particularly those bearing upon availability of transportation, access to the site, disposal, handling and storage of materials, availability of labor, water, electric power, roads, and uncertainties of weather, or similar physical conditions at the site, the character of equipment and facilities needed preliminary to and during the prosecution of the work and all other matters which can in any way affect the work or the cost thereof under the Contract.

C. The Contractor warrants that as a result of his examination and investigation of all the aforesaid data that he can perform the work in a good and workmanlike manner and to the satisfaction of the City. The City assumes no responsibility for

any representations made by any of its officers or agents during or prior to the execution of the Contract. Unless (1) such representations are expressly stated in the Contract; and (2) the Contract expressly provides that the responsibility therefore is assumed by the City.

1.8 INFORMATION ON SITE CONDITIONS

A. Any information obtained by the City regarding the surrounding site conditions, existing construction of site facilities as applicable and similar data will be available for inspection at the office of the City upon request. Such information is offered as supplementary information only. Neither the Engineer nor the City assumes any responsibility for the completeness or interpretation of such supplementary information.

1.9 CONTRACTOR'S RESPONSIBILITY FOR UTILITY PROPERTIES AND SERVICE

A. Where the Contractor's operations could cause damage or inconvenience to railway, telegraph, telephone, television, power, oil, gas, water, sewer, irrigation systems, the operations shall be suspended until all arrangements necessary for the protection of these utilities and services have been made by the Contractor.

B. Notify all utility offices, which are affected by the construction operation at least forty-eight (48) hours in advance (call USA 811). Under no circumstances expose any utility without first obtaining permission from the appropriate agency. Once permission has been granted, locate, expose, and provide temporary support for all existing underground utilities.

C. The Contractor shall be solely and directly responsible for the owner and operators of such properties for any damage, injury, expense, loss, inconvenience, delay, suits, actions, or claims of any character brought because of any injuries or damage that may result from the construction operations under this Contract.

D. Neither the City nor its officers or agents shall be responsible to the Contractor for damages as a result of the Contractor's failure to protect utilities encountered in the work.

E. In the event of interruption to domestic water, sewer, storm drain, or other utility services as a result of accidental breakage due to construction operations, promptly notify the proper authority. Cooperate with said authority in restoration of service as promptly as possible and bear all costs of repair. In no case shall interruption of any water or utility service be allowed to exist outside working hours unless prior approval is granted.

F. In the event the Contractor encounters water service lines that interfere with trenching, he may, by obtaining prior approval of the property owner, City, or

Fire Department as applicable, and the Engineer, cut the service, dig through, and restore the service with similar and equal materials at the Contractor's expense.

G. The Contractor shall replace, at his own expense, any and all other existing utilities or structures removed or damaged during construction, unless otherwise provided for in these Contract Documents or ordered by the Engineer.

1.10 FIELD RELOCATION

A. During the progress of construction, minor relocations of the work may be necessary. Such relocations shall be made only by direction of the Engineer. If existing structures are encountered which prevent the construction, and which are not properly shown on the Drawings, notify the Engineer before continuing with the construction in order that the Engineer may make such field revisions as necessary to avoid conflict with the existing structures. If the Contractor shall fail to so notify the Engineer when an existing structure is encountered, and shall proceed with the construction despite this interference, he shall do so at his own risk.

PART 2 - PRODUCTS (NOT APPLICABLE)

PART 3 - EXECUTION (NOT APPLICABLE)

** END OF SECTION **

This page left intentionally blank.

SECTION 01300

SUBMITTALS

PART 1 - GENERAL

1.1 GENERAL

A. The term “submittal” as used herein shall be understood to include working drawings, detail design calculations, shop drawings, fabrication and installation drawings, erection drawings, lists, graphs, operating instructions, catalog sheets, data sheets, samples, and similar items. Unless otherwise required, such submittals shall be submitted to Engineer. Engineer will review and distribute all submittals in accordance with this section within thirty (30) calendar days following their receipt by Engineer.

1.2 SECTION INCLUDES

A. Submittal procedures.

B. Proposed products list.

C. Shop drawings and product data.

D. Manufacturer’s instructions.

E. Manufacturers’ certificates.

1.3 RELATED SECTIONS

1. Section 01090 - Reference Standards
2. Section 01700 - Project Closeout

1.4 SUBMITTAL PROCEDURES

A. Contractor shall submit one electronic copy of all submittals to the Engineer. Electronic files shall be in Adobe Acrobat (.pdf) with searchable OCR format.

B. Each submittal shall contain data from a single specification section only. If data from multiple specification sections are to be submitted, they shall be transmitted as separate submittals, with their own submittal cover sheet and unique submittal number.

C. A submittal cover sheet shall accompany each submittal. The submittal cover sheet shall clearly indicate the names of the project, City, Contractor, and subcontractor or supplier (if appropriate), as well as the date, submittal number and contract number. Each item included in the submittals shall be listed on the cover sheet with a description, specification section and paragraph numbers, drawing number (if

appropriate), location in the work, quantity required, and whether the item is being submitted as a product listed in the Contract Documents or as an equivalent substitution.

D. All submittals submitted for approval shall have a title block with complete identifying information satisfactory to the Engineer.

E. It is Contractor's responsibility to review submittals made by his suppliers and subcontractors before transmitting them to the Engineer to assure proper coordination of the work and to determine that each submittal is in accordance with his desires and that there is sufficient information about materials and equipment for the Engineer to determine compliance with the Contract Documents. Incomplete or inadequate submittals will be returned for revisions without review.

F. All submittals shall bear the stamp of approval and signature of the Contractor as evidence that they have been reviewed by the Contractor. Submittals without this stamp of approval will not be reviewed by the Engineer and will be returned to the Contractor. Contractor's stamp shall contain the following minimum information and shall use the form provided at the end of this section.

Project Name: _____

Contractor's Name: _____

Date: _____

Submittal No.: _____

Approved By: _____

G. A number shall be assigned to each submittal by the Contractor starting with No. 01 and thence numbered consecutively. Resubmittals shall be identified by the original submittal number followed by the suffix "A" for the first resubmittal, the suffix "B" for the second resubmittal, etc.

H. Except as may otherwise by provided herein, the Engineer will return a copy of each submittal to the Contractor, with his comments noted thereon, within thirty (30) calendar days following their receipt by the Engineer. It is considered reasonable that the Contractor shall make a complete and acceptable submittal to the Engineer by the second submission of a submittal item. The City reserves the right to withhold monies due the Contractor to cover additional costs of the Engineer's review beyond the second submission.

I. If no changes are required for a submittal, a copy of the submittal will be returned to the Contractor marked, "NO EXCEPTION TAKEN." The Contractor shall maintain a copy of the submittal accessible at all times at the job site. Resubmission of said

submittal will not be required.

J. If minor revisions are required for a submittal, a copy of submittal will be returned to the Contractor marked “MAKE CORRECTIONS NOTED” The Contractor shall maintain a copy of the submittal accessible at all times at the job site. Formal revision and resubmission of said submittal will not be required.

K. If revisions require a resubmittal, a copy of the submittal will be returned to the Contractor marked “REVISE AND RESUBMIT,” the Contractor shall revise said submittal and shall resubmit a fully copy of said revised submittal to the Engineer.

L. If a copy of the submittal is returned to the Contractor marked “REJECTED” the Contractor shall provide a new submittal to the Engineer in accordance with Paragraph A above.

M. Fabrication of an item shall not commence before the Engineer has reviewed the pertinent submittal(s) and returned a copy(ies) to the Contractor marked either “NO EXCEPTIONS TAKEN” or “MAKE CORRECTIONS NOTED.” Revisions indicated on submittal shall be considered as changes necessary to meet the requirements of the Contract Drawings and Specifications and shall not be taken as the basis of claims for extra work.

N. The Engineer’s review of the Contractor submittals shall not relieve the Contractor of the entire responsibility for the correctness of details and dimensions. The Contractor shall assume all responsibility and risk for any misfits due to any errors in Contractor-submitted submittals. Any fabrication or other work performed in advance of the receipt of approved submittals shall be entirely at the Contractor’s risk and expense. The Contractor shall be responsible for the dimensions and the design of adequate connections and details.

O. Submittals shall be submitted well in advance of the need for the material or equipment for construction and with ample allowance for the time required to make delivery of material or equipment after data covering such is approved.

P. Identify variations from the Contract Documents and product or system limitations, which may be detrimental to successful performance of the completed work.

Q. Provide space for the Contractor and the Engineer review stamps.

R. Revise and resubmit submittals as required, identify all changes made since previous submittal.

S. Distribute copies of reviewed submittals to concerned parties. Instruct parties to promptly report any inability to comply with provisions.

1.5 PROPOSED PRODUCTS LIST

A. Within ten (10) days after date of Notice to Proceed, the Contractor shall submit a complete list of major products proposed for use, with name of manufacturer, trade name, model number of each product, and whether the item is being submitted as a product listed in the Contract Documents or as an equivalent substitution.

B. Mark each copy to identify the specific quantity, product, model, options, and other data applicable to each unit being furnished for the project. Supplemental manufacturers' standard data to provide information unique to this project.

C. Shop drawings referred to herein shall include shop drawings and other submittals for both shop and field fabricated items. The Contractor shall submit, as applicable, the following for all prefabricated or manufactured structural, mechanical, electrical, plumbing, process systems, and equipment:

1. Shop drawings or equipment drawings, including dimensions, size, and location of connections to other work, and weight of equipment.
2. Catalog information and cuts.
3. Installation or placing drawings for equipment bases.
4. Supporting calculations for equipment and associated supports specified to be designed by equipment manufacturers or suppliers.
5. Wiring and control diagrams of systems and equipment.
6. Complete manufacturer's specifications, including materials description and paint system.
7. Suggested spare parts list with current price information.
8. List of special tools required for checking, testing, parts replacement, and maintenance. (Special tools are those which have been specially designed or adapted for use on parts of the equipment, and which are not customarily and routinely carried by maintenance mechanics.)
9. List of special tools furnished with the equipment.
10. List of materials and supplies required for the equipment prior to, and during, startup.
11. List of materials and supplies furnished with equipment.
12. Samples of finish colors for selection.
13. Special handling instructions.
14. Material Safety Data Sheets (MSDS) and warning label for each chemical to be used in the work.
15. Requirements for storage and protection prior to installation.
16. Requirements for routine maintenance required prior to initial startup.
17. List of all requested exceptions to the Contract Documents.

D. After review, distribute in accordance with Article on Procedures above, and provide copies for Record Documents described in Section 01700 – Project Closeout.

1.6 MANUFACTURER'S INSTRUCTIONS

A. When specified in individual Specification Sections, submit manufacturers' printed instructions for delivery, storage, assembly, installation, startup, adjusting, and finishing, in quantities specified for product data.

B. Identify conflicts between manufacturers' instructions and Contract Documents.

1.7 MANUFACTURER'S CERTIFICATES

A. When specified in individual Specification Sections, submit manufacturers' certificate to the Engineer for review, in quantities specified for product data.

B. Indicate that the material or product conforms to or exceeds specified requirements. Submit supporting reference date, affidavits, and certifications as appropriate.

C. Certificates may be recent or previous test results on material or product but must be acceptable to the Engineer.

PART 2 – PRODUCTS (NOT APPLICABLE)

PART 3 – EXECUTION (NOT APPLICABLE)

SHOP DRAWING TRANSMITTAL FORM

FROM: _____ DATE: _____

_____ PROJECT NAME: _____

TO: _____ OWNER: CITY OF EL CENTRO

_____

☐ THIS IS AN ORIGINAL ☐ THIS IS A REVISION

SUBMITTAL NO.: _____

SUBJECT OF SUBMITTAL: _____

SPECIFICATION SECTION(S): _____

PLAN SHEET NUMBER(S): _____

CONTRACTOR'S CERTIFICATION: Check & Complete either (A) or (B) below:

_____ (A) We have reviewed in detail and certify that the material, equipment or construction procedure(s) contained in this submittal meet all the requirements specified in or shown on the Contract Documents, Construction Specifications and Construction Plans with no exceptions.

_____ (B) We have reviewed in detail and certify that the material, equipment or construction procedure(s) contained in this submittal meet all the requirements specified in or shown on the Contract Documents, Construction Specifications and Construction Plans except for the following deviations:

_____
_____
_____

CONTRACTOR'S AUTHORIZED SIGNATURE:

_____

The Contractor shall use this transmittal form or a similar form with the same information for submittal of shop drawings to the City's representative. The procedure governing shop drawings submittal is contained in the Specifications. Failure to comply with all requirements specified therein will constitute grounds for return of the shop drawings for proper re-submittal.

** END OF SECTION**

SECTION 01310

PROGRESS SCHEDULE

PART 1 - GENERAL

The contractor shall provide a construction schedule that conforms to the requirements below, unless otherwise approved by the City or engineer.

1.1 RELATED SECTIONS

A. Format.

B. Content.

C. Revisions to schedules.

D. Submittals.

1.2 RELATED SECTIONS

A. General Conditions

B. Section 01010 - Summary of Work.

C. Section 01300 - Submittals.

1.3 FORMAT

A. Prior to starting construction, the Contractor shall prepare and submit a Mobilization Schedule in accordance with this Section. All Contract Schedules (baseline, monthly update, recovery, etc.) shall be submitted in accordance with this Section.

Estimated Schedule. Within seven (7) calendar days after the effective date of the Notice to Proceed, the Contractor shall prepare an electronic cost loaded CPM schedule (baseline schedule) and shall submit same to the City and the Engineer for approval in both native electronic and hard copy format. The schedule shall clearly identify all activities, which in the Contractor's judgment are needed to complete the Project within the time specified for completion. The schedule shall include milestones and shall identify the "critical path" of construction. Such schedule shall be submitted to the City, and Engineer for the City's approval. When reviewed and approved this cost-loaded schedule will become the basis for determining progress payments for the lump sum bid items. The Contractor is fully responsible to determine and provide for any and all staffing and resources at levels, which allow

for good quality and timely completion of the Project; the City's approval of the progress schedule does not relieve the Contractor of any such responsibility. The Contractor's failure to incorporate all elements of work required for the performance of the Contract or any inaccuracy in the schedule shall not excuse the Contractor from performing all work required for a completed Project within the specified Contract time period, notwithstanding the City's acceptance of the schedule. If the required schedule or subsequent monthly update is not received when the payment request is due, the Contractor shall not be paid until the schedule is received, reviewed and accepted by the City.

B. Sheet Size: 11-inches by 17-inches.

1.4 CONTENT

A. **Schedule Contents.** The schedule shall indicate graphically the beginning and completion dates of all phases of construction and the critical path for all critical, sequential time related activities. All required schedules shall indicate "float time" for all "slack" or "gaps" in the non-critical activities. Submitted construction schedules shall have a duration to match the Contract time. Excess time may be picked up with "float time" if needed or desired by the Contractor. All float belongs to the project and shall not be used for the benefit of any party. The project schedule shall show the division of the Work into activities and specify the progression from the Notice to Proceed to the completion of the Work. Each construction activity shown on the project schedule will have a respective budget value, a portion of the Contract Price. The project schedule shall include appropriate time allowances for submittals, items of interface with work performed by others, and specified Construction, Physical Checkout, Field Test, Functional Test, Start-up and Performance Test activities. Site-related activities may be combined with work located in structures or relevant work area. Unless authorized by the City, an activity other than procurement/delivery shall span 20 work days or less, and have a value not exceeding $50,000. All activity durations shall be in work days.

B. The project schedule shall include all procurement related activities which lead to the delivery of permanent materials to the site. Procurement activities include but may not be limited to preparation of shop drawings, review and acceptance of shop drawings, materials fabrication, and materials delivery (materials may be invoiced at time of delivery for invoice value). All CPM schedules shall be updated monthly to reflect changes in the status of the job, including weather delays and submitted as part of the payment request.

C. The Contractor shall also forward to the City, at the end of each month, a narrative of work completed including itemized report of the delivery status of major and critical items of purchased equipment and material, including shop drawings and the status of shop and field fabricated work. These progress reports shall indicate the date of the purchase order, the current percentage of completion, estimated

delivery, and cause of delay, if any. The narrative shall also include a description of any changes made to the schedule and a reason why.

D. Show complete sequence of construction by activity, with dates for beginning and completion of each element of construction.

E. Arrange construction work into logically grouped activities.

F. Show accumulated percentage of completion of each item, and total percentage of work completed, as of the first day of each month.

G. Coordinate content with the Schedule of Values.

1.5 REVISIONS TO SCHEDULES

A. If the completion of any part of the work or the delivery of materials is behind the accepted schedule, the Contractor shall submit, in writing, a plan acceptable to the City for bringing the work up to schedule.

B. The City shall have the right to withhold progress payments for the work, if the Contractor fails to update and submit any contract schedules and reports as specified.

C. Indicate progress of each activity to date of submittal, and projected completion date of each activity.

D. Identify activities modified since previous submittal, major changes in scope, and other identifiable changes.

E. Provide narrative report to define problem areas, anticipated delays, and impact on Schedule. Report corrective action taken, or proposed, and its effect including the effect of changes on schedules of separate contractors, if any.

1.6 SUBMITTALS

A. Submit initial Schedule at the pre-construction conference. After review, resubmit required revised data within ten (10) days. NO CONSTRUCTION IS PERMITTED UNTIL SCHEDULE IS APPROVED.

B. Submit revised Progress Schedules with each progress payment, or as directed by the City.

C. Submit two (2) copies.

D. Attach a letter of transmittal to each submittal and include the following information in the letter:

1. A listing of items which have changed since the last submittal.

2. Discussion of problems causing delays, anticipated length of delays, and proposed countermeasures.

1.7 REVIEW

A. The Schedule will be subject to review and revisions by the City.

PART 2 - PRODUCTS (NOT APPLICABLE)

PART 3 - EXECUTION (NOT APPLICABLE)

** END OF SECTION **

SECTION 01380

PRECONSTRUCTION VIDEOS AND PHOTOGRAPHS

PART 1 - GENERAL

1.1 WORK OF THIS SECTION

The Work of this Section shall include, but not be limited to, furnishing all labor, materials, tools and equipment and performing all Work required to print, reproduce, label, and all other items required for provide preconstruction videos and photographs as described in the Contract Documents.

A. After survey and utility markout, and prior to any construction, the Contractor shall video record pre-existing site conditions with audio included and take pre-construction photographs.

B. The Contractor shall retain a professional photographer and/or videographer to perform the specified services or provide evidence to the City's Representative of staff's ability to perform some or all of the services specified. The City's Representative shall have the final determination and discretion as to the suitability of the photographer.

C. The Contractor shall obtain the City Representative's approval prior to taking the first series of photographs or video recordings of each specified type.

D. The City's Representative shall be present during photographing and video recording of preconstruction site conditions.

1.2 RELATED WORK SPECIFIED ELSEWHERE

The Work of the following Sections also applies to the Work of this Section. Other Sections, not referenced below, shall also apply to the extent required for proper performance of this Work.

A. Section 01300 – Submittals

1.3 CONTRACTOR SUBMITTALS

Submit videos and photographs as specified and according to Section 01300. The Contractor shall provide copies of pictures and videos to the City of El Centro prior to performing any work.

1.4 DOCUMENTATION OF EXISTING CONDITIONS PRIOR TO CONSTRUCTION

A. The Contractor shall perform a preconstruction survey of existing improvements along the pipeline alignment and appurtenance locations to provide a record of preconstruction conditions. This survey shall be performed in the presence of the City's Representative. This survey shall include the following as a minimum:

1. Video recording of existing alignment including audio.

2. Photographs of potential "problem areas".

3. Mapping of problematic areas of damaged paving, sidewalk, curb and gutter (redline areas on plans).

B. At the completion of the survey the Contractor shall submit to the City's Representative a report in electronic PDF format detailing the existing condition of improvements affected by the pipeline construction. The report shall include the following as a minimum:

1. One copy of the video recording in digital format on USB drive.

2. One copy of each "potential problem area" photograph.

3. Redlined plans showing areas of damaged paving or other damaged surface improvements.

4. Written summary of "potential problem areas" and the Contractor's recommendations to address these problem areas.

C. Documentation (including report) of existing conditions shall be completed within 15 days of the Notice to Proceed. The Contractor will not be allowed to begin excavation activities until the final report has been submitted and accepted by the City's Representative.

PART 2 - MATERIALS

2.1 VIDEO RECORDING EQUIPMENT

A. The Contractor's video capability, equipment, and operators shall conform to the following minimum criteria:

1. High resolution and clarity provided by 3CCD "high-definition" format.

2. Video shall be automatically dated and timed.

3. The video camera shall be equipped with a zoom lens.

4. The system shall have cataloging and storage capacity.

5. The system shall have on and off-road mobility.

6. The video operator subcontracted or provided by the Contractor shall have at least one (1) year of professional industrial televising experience.

2.2 PRECONSTRUCTION PHOTOGRAPHIC EQUIPMENT

A. The Contractor's photographic capability, equipment, and operators shall conform to the following minimum criteria:

1. The camera shall be a single lens reflex type and shall utilize digital media.

2. The camera shall have minimum of 10 megapixel resolution.

3. The camera shall utilize an automatic focus, f-stop, and flash system with manual override to promote quality photography.

4. The camera shall be capable of imprinting an inalterable date on the film.

5. The photographer subcontracted or provided by the Contractor shall have at least one (1) year of professional industrial photographic experience.

PART 3 - EXECUTION

3.1 VIDEO RECORDING OF PRE-CONSTRUCTION CONDITIONS

A. The Contractor shall video record all Project existing surface conditions prior to the start of any construction activities. Important Project aspects that shall be video recorded include, but are not limited to:

1. Property lines.

2. Right-of-way and easement conditions.

3. Utility markings.

4. Survey conditions.

5. Existing monumentation.

6. Pavement and striping conditions.

7. Traffic control equipment and facilities.

8. Adjacent property conditions.

9. Sidewalk, median, curb, and gutter conditions.

10. Landscaping, planting, and irrigation conditions.

11. Safety conditions.

12. Other unusual conditions or equipment/facility installations.

13. Signing and striping.

B. All video recording of pre-existing surface conditions shall be performed in the presence of the City's Representative.

C. The Contractor shall make all arrangements for video recording, including coordination with the City's Representative.

D. The Contractor shall not be entitled to any additional working days due to video recording activities, including securing video recording services, taping and editing activities, or submitting videos to and obtaining acceptance from the City's Representative.

3.2 PRECONSTRUCTION PHOTOGRAPHS

A. General

1. The Contractor shall take a sufficient number of preconstruction photographs (as directed by the City's Representative) necessary to resolve any disputes that may arise regarding the considerations prior to and subsequent to construction. Photographs of the same general types of Project aspects as described under Video Recording of Pre-Construction Conditions shall be taken. All photographs shall be imprinted with an unalterable date designation.

2. If a dispute arises where no preconstruction photographs were taken, the disputed area shall be restored to the extent directed by the City's Representative and to the satisfaction of the City.

3. Provide high-quality .jpg format with a maximum size of 8 MB per picture. All photographs shall be imprinted with an unalterable date designation. Files shall be delivered on a USB 2.0 Flash Drive to the City Engineer.

4. The City's Representative may, at their option, take additional pre-construction photographs that may be used to settle disputes, but will not be required to make these photographs available to the Contractor.

B. All photographs of pre-construction surface conditions shall be performed in the presence of the City's Representative.

C. The Contractor shall make all arrangements for preconstruction photographs including coordination with the City's Representative.

D. The Contractor shall not be entitled to any additional working days due to preconstruction photographing activities, including securing photographic services, photographic printing services, or submitting preconstruction photographs to and obtaining acceptance from the City's Representative.

E. Photograph Information

1. Place the following information for each photograph:
   a. Date taken (or date stamp feature shall be used)
   b. Photograph number.
   c. Description of view shown in photograph.

** END OF SECTION **

This page left intentionally blank.

SECTION 01510

TEMPORARY CONSTRUCTION FACILITIES

PART 1 - GENERAL

1.1 GENERAL

A. Contractor shall be responsible for all temporary construction facilities required for the work. Contractor shall make all arrangements with utility service companies for temporary services and shall pay all costs associated therewith.

B. Temporary construction facilities include:

1. Water is available at the project site. The Contractor shall make all arrangements with the City for obtaining the water, making connection with the water source, transporting the water, and all other arrangements concerning water to be used by the contractor. Construction water will be provided by the City at the City's expense. Water will be furnished to the Contractor through a “Class O” construction meter for use only on this project, subject to the conditions of current City Code of Ordinances and as specified herein. The Contractor will be responsible for paying the construction meter deposit, which will be refunded after the meter is returned to the City and is payable at the time of meter request application. Fees for installation and removal are payable by the Contractor at the time of construction meter request application.

2. If the meter is connected to a hydrant, use only special hydrant-operating wrenches to open hydrants. Make certain that the hydrant valve is open "full" since "cracking" the valve causes damage to the hydrant. If any hydrants are damaged, the Contractor will be held responsible and shall notify the appropriate agency so that all damage can be repaired as quickly as possible. Fire hydrants shall be completely accessible to the Fire Department at all times. Upon completion of the work, the Contractor shall remove all temporary piping and facilities.

3. If necessary, the Contractor must provide means, at his sole expense, for boosting the water pressure at the project site to meet all requirements, including disinfection.

4. Electric power may not be available at all work locations of the project site. The Contractor shall make arrangements for providing electric power needed to accomplish the project work. The Contractor shall determine the type and amount of temporary diesel or gasoline engine driven generated electric power required for his work and make arrangements for obtaining electric power and pay all associated costs for the generated electric power

used during the contract period. Temporary electric power installation and operation shall meet the construction safety requirements of CAL/OSHA, State of California, Construction Safety Orders and other governing agencies.

5. Electricity, heating, air conditioning and lighting.

6. Telephone.

7. Sanitary and first aid facilities.

C. Contractor shall abide by all rules and regulations of the utility service company or authority having jurisdiction.

D. Provide all materials, equipment and power required for temporary electricity and lighting. Include continuous power for construction site offices. Provide all outlets with circuit breaker protection and comply with ground fault protection requirements of National Electric Code.

E. Suitably enclosed chemical or self-contained toilets shall be provided for the use of those employed on the work. Toilets shall be located near the work site and secluded from observation insofar as possible. Toilets shall be serviced at regular intervals, kept clean and supplied throughout the course of the work.

F. Contractor shall furnish and maintain a safe drinking water supply readily available to all workers.

G. Contractor shall be responsible for all utility service costs until the work is substantially complete. Included are all fuel, power, light, heat and other utility services necessary for execution, completion, testing and initial operation of the work.

H. Contractor shall:

1. Maintain and operate systems to assure continuous service (refer to Section 01043).

2. Modify and extend systems as work progress requires.

3. Completely remove temporary materials and equipment when their use is no longer required.

4. Clean and repair damage caused by temporary installations or use of temporary facilities.

5. Restore existing facilities used for temporary services to specified or to original condition.

PART 2 - PRODUCTS (NOT APPLICABLE)

PART 3 - EXECUTION (NOT APPLICABLE)

** END OF SECTION **

This page left intentionally blank.

SECTION 01545

PROTECTION OF WORK AND PROPERTY

PART 1 - GENERAL

1.1 GENERAL

A. Contractor shall be responsible for taking all precautions, providing all programs, and taking all actions necessary to protect the work and all public and private property and facilities from damage as specified in these Contract Documents and herein.

B. In order to prevent damage, injury or loss, Contractor's actions shall include but not be limited to, the following:

1. Store apparatus, materials, supplies, and equipment in an orderly safe manner that will not unduly interfere with the progress of the work or the work of any other contractor or utility service company.

2. Provide suitable storage facilities for all materials, which are subject to injury by exposure to weather, theft, breakage, or otherwise.

3. Place upon the work or any part thereof only such loads as are consistent with the safety of that portion of the work.

4. Clean up frequently all refuse, rubbish, scrap materials, and debris caused by his operations, to the end that at all times the site of the work shall present a safe, orderly and workmanlike appearance.

5. Provide barricades and guard rails around openings, for scaffolding, for temporary stairs and ramps, around excavations, elevated walkways and other hazardous areas.

6. Provide City pre-construction photos of existing site conditions (reference Section 01380).

7. Take work progress photos and submit monthly to the Engineer.

C. Contractor shall not, except after written consent from proper parties, enter or occupy privately-owned land with men, tools, materials or equipment, except on easements provided herein.

D. Contractor shall assume full responsibility for the preservation of all public and private property or facility on or adjacent to the site. If any direct or indirect damage is done by or on account of any act, omission, neglect or misconduct in the

execution of the work by the Contractor, it shall be restored by the Contractor, at his expense, to a condition equal to that existing before the damage was done.

1.2 PROTECTION OF EXISTING STRUCTURES

A. The Contractor shall verify to his own satisfaction the existence or absence of any obstruction of his work. Should obstructions be identified, the Engineer shall be notified. Utilities, facilities, structures and all other property damaged during the performance of the work shall be repaired, replace or otherwise restored to the satisfaction of the City's Representative. Such repair, replacement or restoration shall be at the Contractor's expense and at no additional cost to the City.

B. Take necessary precautions to prevent damage to existing structures whether on the surface, aboveground, or underground. An attempt has been made to show major structures on the Drawings. While the information has been compiled from the best available sources, its completeness and accuracy cannot be guaranteed, and it is presented simply as a guide to avoid known possible difficulties.

C. Without additional compensation, the Contractor may remove and replace in a condition as good as or better than original, such small miscellaneous structures as fences, mailboxes, and signposts, etc. that interfere with the Contractor's operations.

D. Underground Structures:

1. Underground structures are defined to include, but not be limited to, all sewer, water, gas, and other piping, and manholes, chambers, electrical conduits, tunnels and other existing subsurface work located within or adjacent to the limits of the work.

2. All underground structures known to Engineer except sewer, electric, and telephone service connections are shown. This information is shown for the assistance of Contractor in accordance with the best information available, but is not guaranteed to be correct or complete.

3. Contractor shall explore ahead of his trenching and excavation work and shall uncover all obstructing underground structures sufficiently to determine their location, to prevent damage to them and to prevent interruption to the services that such structures provide. If Contractor damages an underground structure, he shall restore it to original condition at his expense.

4. Necessary changes in the location of the work may be made by Engineer, to avoid unanticipated underground structures.

5. If permanent relocation of an underground structure or other subsurface facility is required and is not otherwise provided for in the Contract

Documents, Engineer will direct Contractor in writing to perform the work, which shall be paid for under the provisions of the General Requirements. If the Contractor shall fail to so notify the Engineer when an existing structure is encountered, and shall proceed with the construction despite this interference, he shall do so at his own risk.

6. The Contractor shall call Underground Service Alert (Digalert) at 811 or 1-800-422-4143 a minimum (2) working days prior to any excavation.

E. Surface Structures:

1. Surface structures are defined as all existing buildings, structures and other facilities above the ground surface. Included with such structures are their foundations or any extension below the surface. Surface structures include, but are not limited to, buildings, tanks, walls, bridges, roads, dams, channels, open drainage, piping, poles, wires, posts, signs, markers, curbs, walks and all other facilities that are visible above the ground surface.

F. Protection of Underground and Surface Structures:

1. Contractor shall sustain in their places and protect from direct or indirect injury all underground and surface structures located within or adjacent to the limits of the work. Such sustaining and supporting shall be done carefully and as required by the party owning or controlling such structure. Before proceeding with the work of sustaining and supporting such structure, Contractor shall satisfy the Engineer that the methods and procedures to be used have been approved by the party owning same.

2. Contractor shall assume all risks attending the presence or proximity of all underground and surface structures within or adjacent to the limits of the work. Contractor shall be responsible for all damage and expense for direct or indirect injury caused by his work to any structure. Contractor shall repair immediately all damage caused by his work, to the satisfaction of the City of the damaged structure.

G. All other existing surface facilities, including but not limited to, guard rails, posts, guard cables, signs, poles, markers, and curbs which are temporarily removed to facilitate installation of the work shall be replaced and restored to their original condition at Contractor's expense.

1.3 PROTECTION OF INSTALLED PRODUCTS

A. Provide protection of installed products to prevent damage from subsequent operations. Remove protection facilities when no longer needed, prior to completion of work.

B. Control traffic to prevent damage to equipment, materials and surfaces.

1.4 PROTECTION OF SURVEY OR ROADWAY MARKERS

The Contractor shall not destroy, remove, or otherwise disturb any existing survey markers or other existing street or roadway markers without proper authorization. No pavement breaking or excavation shall be started until all survey or other permanent marker points that will be disturbed by the construction operations have been properly referenced for easy and accurate restoration. It shall be the Contractor's responsibility to notify the proper representatives of the City of the time and location that work will be done. Such notification shall be sufficiently in advance of construction so that there will be no delay due to waiting for survey points to be satisfactorily referenced for restoration. All survey markers or points disturbed will be accurately restored by the Contractor at the Contractor's expense after all street or roadway resurfacing has been completed. All restoration of survey monuments shall be a Licensed Land Surveyor registered by the state of California.

1.5 TEMPORARY RESURFACING

The Contractor shall promptly place temporary surfacing on all areas where existing surfacing has been disturbed and shall maintain such surfacing for the period of time required by the City's Representative. Temporary resurfacing shall be constructed in accordance with the following requirements.

1. The subgrade shall be uniformly watered sufficiently to eliminate all dust, but not to such extent as to form mud or pools of water. The street and surrounding area shall be cleared of rubbish and debris. The street shall be swept and the surrounding area shall be cleaned thoroughly, at least weekly.

2. The temporary resurfacing shall then be spread over the prepared foundation material and rolled with an 8-ton tandem roller in such a manner that after rolling, the temporary resurfacing shall present a smooth surface for traffic, shall not be less than 1-1/2 inches in compacted thickness and shall be maintained free from bumps and depressions until permanent resurfacing is placed. The finished surface of said temporary resurfacing shall be flush with the adjoining pavement grade.

3. The Contractor shall stockpile enough temporary resurfacing material on the job to ensure a ready supply at all times for necessary repairs to the temporary resurfacing already placed.

4. The temporary resurfacing shall be left in place until permanent resurfacing is constructed.

5. No separate payment will be allowed for temporary resurfacing and all costs therefore shall be included with the associated items of contract work.

6. The Contractor shall take precautions to prevent damage to all pavement and road edge surfaces at the project site and at the access road junctions with the existing roadways. All pavement and surfaces within the City, County and State rights-of-way that are damaged by the Contractor shall be replaced or repaired by him. For

the purpose of this Article, the terms "pavement" and "surfaces" shall be deemed to include base materials.

1.6 PROTECTION OF TREES AND LANDSCAPING

A. Unless designated for removal, the Contractor shall exercise all necessary precautions so as not to damage or destroy any trees of shrubs of other existing landscaping, including those lying within or beyond street rights-of-way and project limits, and shall not trim or remove any trees unless such trees have been approved for trimming or removal by the Engineer and the jurisdictional agency or City. All existing trees and landscaping, not designated for removal, which are damaged during the construction shall be trimmed or replaced by the Contractor or a certified landscape maintenance company under permit from the jurisdictional City and to the satisfaction of said agency and/or the City. All costs shall be borne by the Contractor.

1.7 CONTRACTOR'S RESPONSIBILITY FOR UTILITY PROPERTIES AND SERVICE

B. Where the Contractor's operations could cause damage or inconvenience to railway, telegraph, telephone, television, power, oil, gas, water, sewer, or irrigation systems, the operations shall be suspended until all arrangements necessary for the protection of these utilities and services have been made by the Contractor.

B. Notify all utility offices that are affected by the construction operation at least two (2) working days in advance (call Digalert at 811 or 1-800-422-4133). Under no circumstances expose any utility without first obtaining permission from the appropriate agency. Once permission has been granted, locate, expose, and provide temporary support for all existing underground utilities.

C. The Contractor shall be solely and directly responsible for the City and operators of such properties for any damage, injury, expense, loss, inconvenience, delay, suits, actions, or claims of any character brought because of any injuries or damage which may result from the construction operations under this contract.

D. Neither the City nor its officers or agents shall be responsible to the Contractor for damages as a result of the Contractor's failure to protect utilities encountered in the work.

E. In the event of interruption to domestic water, sewer, storm drain, or other utility services as a result of accidental breakage due to construction operations, promptly notify the proper authority. Cooperate with said authority in restoration of service as promptly as possible and bear all costs of repair. In no case shall interruption of any water or utility service be allowed to exist outside working hours unless prior approval is granted.

F. In the event the Contractor encounters water service lines that interfere with trenching, he may, by obtaining prior approval of the property owner, City, or Fire

Department as applicable, and the engineer, cut the service, dig through, and restore the service with similar and equal materials at the Contractor's expense.

G. The Contractor shall replace, at his own expense, any and all other existing utilities or structures removed or damaged during construction, unless otherwise provided for in these Contract Documents or ordered by the engineer.

1.8 FIELD RELOCATION

A. During the progress of construction, it is expected that minor relocations of the work will be necessary. Such relocations shall be made only by direction of the Engineer. If existing structures are encountered which prevent the construction, and which are not properly shown on the Drawings, notify the Engineer before continuing with the construction in order that the Engineer may make such field revisions as necessary to avoid conflict with the existing structures. If the Contractor shall fail to so notify the engineer when an existing structure is encountered, and shall proceed with the construction despite this interference, he shall do so at his own risk.

1.9 LAND MONUMENTS

A. The Contractor shall notify the Engineer of any existing Federal, State, City, County, and private land monuments encountered. Private monuments shall be preserved or replaced by a licensed surveyor in the State of California at the Contractor's expense. Appropriate record of survey drawings shall be filed with the County of Imperial or the City of El Centro for all replaced monuments. When government monuments are encountered, the Contractor shall notify the Engineer at least two (2) weeks in advance of the proposed construction in order that the engineer will have ample opportunity to reference these monuments for later repladcement.

PART 2 - PRODUCTS (NOT APPLICABLE)

PART 3 - EXECUTION (NOT APPLICABLE)

** END OF SECTION **

SECTION 01550

SITE ACCESS AND STORAGE

PART 1 - GENERAL

1.01 THE REQUIREMENT

A. Parking and Storage Areas

1. The City will provide the Contractor with designated areas for parking and storage near the project site, inside the Treatment Plant. The contractor shall not park vehicles or store materials or equipment outside of the designated areas.

B. Restoration

1. At the completion of the work, the surfaces of land used for parking and storage areas shall be restored by the Contractor to its original condition and to the satisfaction of the City's Representative. At a minimum, such restoration shall include establishment of a permanent ground cover adequate to restrain erosion for all disturbed areas.

C. Traffic Regulations

1. Contractor shall obey the traffic laws and comply with all the requirements of the City of El Centro and other local authorities having jurisdiction to maintain adequate warning signs, lights, barriers, etc., for the protection of traffic on public roadways.

D. Storage of Equipment and Materials

1. Contractor shall store his equipment and materials in accordance with the requirements of the General Conditions, the Supplementary Conditions, and as hereinafter specified. All equipment and materials shall be stored in accordance with manufacturer's recommendations and as directed by the City or Engineer, and in conformity to applicable statutes, ordinances, regulations, and rulings of the public authority having jurisdiction.

2. Contractor shall enforce the instructions of the City and Engineer regarding the posting of regulatory signs for loadings on structures, fire safety, and smoking areas.

3. Contractor shall not store materials or encroach upon private property without the written consent of the owners of such private property.

4. Contractor shall not store unnecessary materials or equipment on the job site and shall take care to prevent any structure from being loaded with a weight which will endanger its security or the safety of persons.

5. Materials shall not be placed within ten (10) feet of fire hydrants. Gutters, drainage channels and inlets shall be kept unobstructed at all times.

6. Contractor shall provide adequate temporary storage buildings/facilities, if required, to protect materials or equipment on the job site.

PART 2 - PRODUCTS (NOT APPLICABLE)

PART 3 - EXECUTION (NOT APPLICABLE)

** END OF SECTION **

SECTION 01560

TEMPORARY ENVIRONMENTAL CONTROLS

PART 1 - GENERAL

1.1 GENERAL

Contractor shall provide and maintain methods, equipment, and temporary construction, as necessary to provide controls over environmental conditions at the construction site and adjacent areas. Remove physical evidence of temporary facilities at completion of work.

1.2 NOISE CONTROL

Contractor's vehicles and equipment shall be such as to minimize noise to the greatest degree practicable. No internal combustion engine shall be operated on the project without a muffler of a type recommended by the manufacturer. Noise levels shall conform to the latest OSHA standards and in no case will noise levels be permitted which interfere with the work of the Owner or others. Noise levels shall comply with city, county, and state noise limitation requirements. Diesel and gasoline engine driven generators used for powering any and all equipment shall be located, to the satisfaction of the City's Representative, such that any exhaust or mechanical noise is directed away from populated areas. In the event that complaints of noise are received, the Contractor shall, as directed by the City's Representative, relocate or modify his equipment in order to alleviate the noise problem.

1.3 DUST CONTROL

Contractor shall be responsible for controlling objectionable dust caused by its operation of vehicles and equipment, clearing or for any reason whatever. Contractor shall apply water and calcium chloride or use other methods subject to the City's Representative approval, which will keep dust in the air to a minimum. The Contractor's operations shall comply with Air Quality Control Board requirements.

1.4 PEST AND RODENT CONTROL

Contractor shall provide rodent and pest control as necessary to prevent infestation of construction or storage area. Employ methods and use materials which will not adversely affect conditions at the site or on adjoining properties.

1.5 WATER CONTROL

A. Contractor shall provide methods to control surface water and water from excavations and structures to prevent damage to the work, the site, or adjoining properties.

B. Control fill, grading and ditching to direct water away from excavations, pits, tunnels and other construction areas; and to direct drainage to proper runoff courses so as to prevent any erosion, damage or nuisance. Water control shall comply with local and federal permitting requirements.

C. Contractor shall provide, operate and maintain equipment and facilities of adequate size to control surface water.

D. Contractor shall dispose of drainage water in a manner to prevent flooding, erosion, or other damage to any portion of the site or to adjoining areas and in conformance with all environmental requirements.

E. Any proposed shutdowns must be indicated on the Contractor's preliminary schedule to be submitted for review by the City and Engineer at the Pre-Construction Conference. The actual allowable durations of the shutdowns will be determined during the preparation of the detailed construction schedule, unless otherwise noted in the plans and/or these specifications.

1.6 POLLUTION CONTROL

A. Contractor shall provide methods, means and facilities required to prevent contamination of soil, water or atmosphere by the discharge of noxious substances from construction operations.

B. Contractor shall provide equipment and personnel, and perform emergency measures required to contain any spillages, and to remove soils or liquids contaminated as a result of contractor's activities.

1. Excavate and dispose offsite any contaminated soil or liquid and replace with suitable compacted fill and topsoil.

C. Contractor shall take special measures to prevent harmful substances from entering public waters.

1. Prevent disposal of wastes, effluents, chemicals, or other such substances adjacent to streams, or in sanitary or storm sewers.

D. Contractor shall provide systems for control of atmospheric pollutants.

1. Prevent toxic concentrations of chemicals.

2. Prevent harmful dispersal of pollutants into the atmosphere.

E. All Contractor's equipment used during construction shall conform to all current federal, state and local laws and regulations.

1.7 EROSION CONTROL

A. Contractor shall plan and execute construction by methods to control surface drainage to prevent erosion and sedimentation.

1. Hold the areas of bare soil exposed at one time to a minimum.

2. Provide temporary control measures such as berms, dikes and drains.

PART 2 - PRODUCTS (NOT APPLICABLE)

PART 3 - EXECUTION (NOT APPLICABLE)

** END OF SECTION **

This page left intentionally blank.

SECTION 01700

PROJECT CLOSEOUT

PART 1 - GENERAL

1.1 GENERAL

A. The Contractor shall thoroughly clean the project site, as described in Subsection 1.4, Clean Up, prior to final acceptance of the work by the City.

B. Contractor shall keep accurate and legible records on a single set of full-size project prints of the drawings. Additional record drawing requirements are identified in Subsection 1.5, Record Drawings.

1.2 PROJECT CLOSEOUT

The Contractor shall complete all the requirements of Subsection 1.3, Project Closeout-Execution, prior to requesting final payment. The Contractor, prior to requesting final payment, shall obtain and submit the following items to the Engineer:

A. Written guarantees, where required.

B. Operating manuals and instructions.

C. Maintenance stock items; spare parts, special tools.

D. Completed record drawings per Subsection 1.5.

E. Project Soils Report.

F. Releases from all parties who are entitled to claims against the subject project, property, or improvement pursuant to the provisions of law.

1.3 PROJECT CLOSEOUT - EXECUTION

A. Since the period of time for completing the work is limited and time is of the essence on this Project, the Contractor shall expedite the work to the best of his ability, commensurate with good workmanship, using experienced supervision and competent personnel.

B. When only minor construction items remain to be completed, the Contractor may request a preliminary walk-through in writing and one will be scheduled. At this time, a punch list of any outstanding items will be written and mailed to the Contractor. It shall be the responsibility of the Contractor to assure that any outstanding items on the punch list be completed in a timely manner.

C. The City will schedule a final inspection of the Project to assure that the Project has been completed to the Project Specifications and requirements and City specifications. Also, the submittal and acceptance of the record drawings are requisite to referring the facilities for acceptance.

D. When the above items have been completed, the facilities shall be referred to the City's General Manager for acceptance.

E. Warranty will begin the day of acceptance.

1.4 CLEAN UP

Contractor shall execute clean up during progress of the work, at completion of the work, and as required by the Engineer.

A. In addition to the requirements herein, the Contractor shall maintain the cleanliness of the work and surrounding premises within the work limits so as to comply with federal, state, and local fire and safety laws, ordinances, codes and regulations.

B. The Contractor shall comply with all federal, state and local anti-pollution laws, ordinances, codes and regulations when disposing of waste materials, debris and rubbish.

C. The Contractor shall prevent accumulation of dust, dirt, debris, rubbish and waste materials on or within the work or on the premises surrounding the work.

D. The Contractor shall dispose of all waste materials, surplus materials, debris and rubbish off the site.

E. The Contractor shall not burn or bury rubbish and waste materials on the site.

F. The Contractor shall not dispose of volatile or hazardous wastes, such as paint, mineral spirits, oil, or paint thinner, in storm or sanitary drains.

G. The Contractor shall not discharge wastes into streams or waterways.

H. The Contractor shall use only cleaning materials recommended by manufacturer of surface to be cleaned.

I. The Contractor shall use each type of cleaning materials on only those surfaces recommended by the cleaning material manufacturer.

J. The Contactor shall use only materials, which will not crate hazards to health or property.

K. The Contractor shall provide suitable containers for storage of waste materials, debris and rubbish until time of disposal.

L. The Contractor shall dispose of waste, debris and rubbish off site at legal disposal areas.

M. At project completion, Contractor shall remove and dispose of all excess or waste materials, debris, rubbish from the site. Contractor shall remove spatter, grease, stains, fingerprints, dirt, dust, labels, tags, packing materials, and other foreign items or substances from interior and exterior surfaces. The Contractor shall repair, patch and touch up chipped, scratched, dented or otherwise marred surfaces to match specified finish. Contractor shall wash and shine glazing and polished surfaces, clean all floors and maintain cleaning until acceptance and occupation by the Owner.

1.5 RECORD DRAWINGS

A. Make the record drawings available for review by the Engineer.

B. Maintain record drawings on an up-to-date basis.

C. Protect the record set from damage or loss.

D. Detailed Requirements

a. The Contractor shall provide record drawings, which shall clearly show all differences between the contract work as drawn and as installed, for all concealed construction, as well as construction added to the Contract, which is not indicated on the Contract Drawings.

b. Concealed shall mean construction installed underground or in an area which cannot be readily inspected by use of access panels, inspection plates or other removable features.

c. Show all changes in the work, or work added, on the record drawings in a red ink.

d. In showing changes in the work, or added work, use the same legends that are used on the Contract Drawings. Indicate exact locations by dimensions and exact elevations. Give dimensions from a permanent point.

e. Record by marking on the Drawings all changes in the work that occur during construction, including adding approved change orders.

f. Show locations by key dimensions, depths, elevations of all underground lines, conduit runs, sensor lines, valves, capped ends, branch fittings, pull boxes, etc.

g. Record information on how to maintain and/or service concealed work.

E. Deliver the marked record set of drawings to the City prior to acceptance of the work.

1.6 OPERATION AND MAINTENANCE INSTRUCTION DOCUMENTS

A. Submit one electronic copy in PDF format and three sets prior to final inspection, bound in 8-1/2 by 11-inch three D size ring binders with durable plastic covers. The cover shall have a printed title with the name of the project and title the subject of the binder as "OPERATIONS AND MAINTENANCE INSTRUCTIONS".

B. Internally subdivide the binder contents with permanent page dividers, logically organized, with tab titling clearly printed under reinforced laminated plastic tabs.

C. Contents:

a. Directory, listing names, addresses, and telephone numbers of Consultant, Contractor, Subcontractors, and major equipment suppliers.

b. Operation and maintenance instructions, arranged by system.

c. Project documents and certificates.

1.7 WARRANTIES

A. Provide duplicate notarized copies.

B. Execute and assemble documents from Subcontractors, suppliers, and manufacturers.

C. Submit prior to final Application for Payment.

D. Warranty will begin the day of acceptance.

PART 2 - PRODUCTS

Not used.

PART 3 - EXECUTION

Not used.

** END OF SECTION **

SECTION 02050

DEMOLITION

PART 1 - GENERAL

1.1 WORK OF THIS SECTION

A. The CONTRACTOR shall furnish all labor, equipment, materials, and incidentals necessary to perform and complete demolition work as shown on the contract drawings and as specified herein.

B. In areas indicated to be remodeled, the CONTRACTOR shall cut back flush and seal any pipe stub-outs remaining, and remove exposed piping, conduits, fixtures, junction boxes, water fixtures, and supports. Concealed piping and conduits shall be removed or capped and abandoned as necessary to facilitate the remodeling work. All other items shall be removed as shown.

1.2 RELATED SECTIONS

A. The Work of the following Sections applies to the Work of this Section. Other Sections of the Specifications, not referenced below, shall also apply to the extent required for proper performance of this Work.

1. Division 1.
2. Section 02200, Earthwork.

1.3 REFERENCE SPECIFICATIONS, CODES AND STANDARDS

A. The WORK of this Section shall comply with the current edition of the Uniform Building Code as adopted by the authority having jurisdiction over the Work.

B. Except as otherwise indicated in this Section, the CONTRACTOR shall comply with the 2021 edition of the Standard Specifications for Public Works Construction (SSPWC) together with the latest adopted editions of the Regional and Supplement Amendments.

1.4 CONTRACTOR SUBMITTALS

A. The CONTRACTOR shall submit a demolition schedule in compliance with Division 1 of the Specifications. The demolition schedule shall provide a complete coordination schedule for demolition work including shut-off and continuation of utility services before the start of the demolition. The schedule shall indicate proposed methods and operations of facility demolition, and provide a detailed sequence of demolition and removal work to ensure uninterrupted operation of occupied areas.

B. Before completion of the Work, the CONTRACTOR shall submit an Affidavit of Legal Disposal attesting to the lawful disposal of all demolished materials.

PART 2 - PRODUCTS (NOT USED)

PART 3 - EXECUTION

3.1 GENERAL

A. Structures shall be demolished and removed in compliance with the requirements indicated herein.

3.2 POLLUTION CONTROL

A. Water sprinkling, temporary enclosures, chutes, and other suitable methods shall be used for dust suppression in compliance with SSPWC Section 3-12.

B. Water shall not be used when it creates hazardous or objectionable conditions such as flooding, erosion, sedimentation, or pollution.

3.3 PROTECTION

A. Safe passage of persons around the area of demolition shall be provided. Operations shall be conducted to prevent injury to people and damage to adjacent buildings, structures, and other facilities.

B. Interior and exterior shoring, bracing, and supports shall be provided to prevent movement, settlement, deformation or collapse of structures to be demolished.

C. Existing landscaping materials, structures, and appurtenances not to be demolished shall be protected and maintained as necessary and in accordance with SSPWC Section 400-1.

D. The CONTRACTOR shall protect and maintain all other utilities during the demolition work.

E. The CONTRACTOR shall protect other existing equipment from dust caused by demolition activities by covering, drop-curtains, and other similar methods.

3.4 EQUIPMENT AND PIPING REMOVAL

A. All equipment and piping to be removed shall be properly disconnected from structures, piping, electrical and instrumentation systems. The areas and surfaces from which items were removed shall be left with a neat appearance and finish compatible with surrounding areas and surfaces. Holes in the walls and floors shall be plugged smooth with grout. The CONTRACTOR shall do all painting, sanding, grouting, sacking, resurfacing and other work as necessary to comply with the above requirements.

B. The CONTRACTOR shall fill with sand all buried pipes 8 inches in diameter and larger that are to be abandoned under this project.

3.5 DISPOSAL OF NON-FRIABLE ASBESTOS

A. If asbestos cement pipe (ACP) is identified, the CONTRACTOR shall employ adequate care to maintain the pipe in a non-friable condition. Removal of ACP shall be in whole sections where possible. Cutting or breaking of ACP to facilitate removal shall be in compliance with California Regulations, Title 8, Section 5208. At a minimum, the CONTRACTOR shall follow the following requirements for ACP that is to be cut or broken:
   1. The CONTRACTOR shall evacuate the area of unauthorized and untrained personnel, post warning signs, and provide a demarcation zone and adequate barriers to keep unauthorized personnel out of the area.
   2. The CONTRACTOR shall provide personal protective equipment consisting at least of a respirator and disposable clothing to asbestos accredited workers performing the cutting or breaking of ACP. Respiratory protection shall be in accordance with the requirements of California Regulations, Title 8, Section 5414.
   3. The area to be cut or broken shall be adequately wetted with amended water to reduce fiber emission. The method employed by the CONTRACTOR shall minimize fiber release. Power saw cutting will not be allowed. All related debris from the cutting or breaking of ACP shall be considered friable. The CONTRACTOR shall dispose of friable material in accordance with California Regulations Title 22.
   4. All AC pipe removed and waste generated shall be wrapped in minimum 6 mil polyethylene sheeting or bags and shall be properly transported and disposed of.

B. The CONTRACTOR is responsible for all ACP removal and associated contamination. For disposal of non-friable ACP, the CONTRACTOR shall comply with the requirements of the local authority having jurisdiction.

C. The costs for disposal of non-friable asbestos-containing materials shall paid for by the CONTRACTOR, and shall be included in the Bid price for the Work, and no separate payment will be allowed.

3.6 DISPOSAL OF FRIABLE ASBESTOS

A. Friable asbestos-containing material is defined as material that can be crumbled, pulverized, or reduced to powder by hand pressure. All friable asbestos-containing materials shall be considered as hazardous waste and shall be transported by a licensed hazardous waste hauler. Procedures for handling friable asbestos-containing material shall conform to the requirements of local, state, and federal laws. Friable asbestos containing materials shall be disposed of at an approved hazardous waste landfill.

B. Upon discovery of friable asbestos, the CONTRACTOR shall immediately notify the CONSTRUCTION MANAGER.

C. Payment for the disposal of friable asbestos-containing materials shall be in accordance with SSPWC Section 7-4.

3.7 STRUCTURE DEMOLITION

A. Building structures and appurtenances shall be demolished, as shown and required to complete work, in compliance with governing regulations, in accordance with Division 1 of the Specifications.

B. Small structures may be removed intact when approved by the utility or authorities having jurisdiction.

C. Demolition shall proceed in a systematic manner, from top of structure to ground.

D. Concrete and masonry shall be demolished into small sections. The CONTRACTOR shall use bracing and shoring to prevent settlement, damage, deformation, or collapse of structures to remain. Where adjoining structures are to be kept in place, the demolition limit lines shall be neatly saw-cut. Sections to be removed shall be broken out, and the remaining face shall be chipped back to the saw-cut line. The CONTRACTOR shall do the necessary work to provide the remaining face with a finish compatible with surrounding surfaces (see paragraph 3.10).

E. Demolition equipment shall be dispersed throughout structure, and demolished materials shall be promptly removed to prevent excessive loads on supporting walls, floors or framing.

3.8 BELOW-GRADE DEMOLITION

A. Structures designated on the plans to be demolished shall be removed to the full depth of the structure, including its foundation. Where adjoining structures are to be kept in place, the demolition limit lines shall be neatly saw-cut. Sections to be removed shall be broken out, and the remaining face shall be chipped back to the saw-cut line. The CONTRACTOR shall do all necessary work to provide the remaining face with a finish compatible with surrounding surfaces (see paragraph 3.10).

B. Below-grade areas and voids resulting from demolition of structures shall be completely filled to a minimum compaction of 95%.

C. All fill and compaction shall be in accordance with Section 02200, Earthwork.

D. After fill and compaction, surfaces shall be graded to meet adjacent contours and to provide flow to surface drainage structures, or as indicated.

3.9 DISPOSAL OF DEMOLISHED MATERIALS

A. Demolition and removal of debris shall be conducted to ensure minimum interference with roads, streets, walks, and other adjacent occupied or used facilities, which shall not be closed or obstructed without permission from the OWNER. Alternate routes shall be provided around closed or obstructed traffic ways. All removed material not designated for salvage and all debris shall become the property of the CONTRACTOR.

B. Site debris, rubbish, and other materials resulting from demolition operations shall be removed and disposed of in compliance with all laws and regulations. Burning of removed materials from demolished structures is not permitted.

3.10 PATCHING AND REPAIRING

A. The CONTRACTOR shall provide patching, replacing, repairing, and refinishing of damaged areas involved in demolition as necessary to match the existing adjacent surfaces.

B. The CONTRACTOR shall repair all damages caused to adjacent facilities by demolition to the satisfaction of the CONSTRUCTION MANAGER, and at no additional cost to the OWNER.

C. After patching and repairing has been completed, the CONTRACTOR shall carefully remove splatters of mortar from adjoining work (plumbing fixtures, trim, tile, and finished metal surfaces) and repair any damage caused by such cleaning operations.

3.11 PAVEMENT REMOVAL

All asphalt pavements and concrete pads shall be saw-cut on a neat line at right angles to the curb face.

3.12 EXISTING FACILITIES

A. Disconnection of Utility Services: Existing utility services shall be disconnected at the points necessary to achieve the work indicated in this contract. This includes both ends of every electrical conductor connected to a motor control center, field panel or equipment control station to be abandoned, demolished, or rewired (revised).

B. Removal of Utilities: Remove all existing utilities in structures to be demolished. Remove all existing conductors from electrical services to be removed from service, abandoned or revised. Remove all exposed portion of electrical conduit removed from service or abandoned and cap open ends of such conduit where they are encased. Existing utilities cannot be removed until replacement utilities have been installed, tested and placed in service.

C. Protection: The CONTRACTOR shall preserve in operating condition, unless otherwise noted, all active utilities, including electrical services. The CONTRACTOR shall repair damage to such utilities caused by work under this contract to the satisfaction of the CONSTRUCTION MANAGER.

3.13 SALVAGE

A. The OWNER has the right to salvage any items scheduled for removal. The CONTRACTOR shall notify the CONSTRUCTION MANAGER five (5) days prior to any salvage or demolition work to determine the disposition of items to be removed. The CONSTRUCTION MANAGER will mark items to be salvaged. Such items shall be

properly disconnected, removed from their foundations, cleaned and stored at a designated location on the plant site.

3.14 CLEANING

A. During and upon completion of Work, the CONTRACTOR shall promptly remove unused tools and equipment, surplus materials, rubbish, debris, and dust and shall leave areas affected by the Work in a clean condition in accordance with Division 1 of the Specifications.

B. The CONTRACTOR shall clean adjacent structures and facilities of dust, dirt, and debris caused by demolition and return adjacent areas to the condition that existed prior to start of Work.

C. The CONTRACTOR shall clean and sweep the affected portions of roads, streets, sidewalks and passageways daily.

** END OF SECTION **

SECTION 02100

SITE PREPARATION

PART 1 - GENERAL

1.1 WORK OF THIS SECTION

The CONTRACTOR shall furnish all labor, equipment, materials, and incidentals necessary to prepare the site including clearing, grubbing, stripping, and disposal.

1.2 RELATED SECTIONS

A. The Work of the following Sections applies to the Work of this Section. Other Sections, not referenced below, shall also apply to the extent required for proper performance of this Work.

1. Division 1.
2. Section 02050, Demolition.
3. Section 02140, Dewatering.
4. Section 02200, Earthwork.
5. Approved Drawings.

1.3 REFERENCE SPECIFICATIONS, CODES AND STANDARDS

Except as otherwise indicated in this Section, the CONTRACTOR shall comply with the 2021 edition of the Standard Specifications for Public Works Construction (SSPWC) together with the latest adopted editions of the Regional and Supplement Amendments.

1.4 CONTRACTOR SUBMITTALS

A. Before starting the Work, the CONTRACTOR shall have submitted a Storm Water Pollution Prevention Plan in accordance with the requirements of Division 1 of the Specifications.

B. Before completion of the Work, the CONTRACTOR shall submit an Affidavit of Legal Disposal attesting to the lawful disposal of all materials removed by clearing, grubbing, and stripping.

1.5 DEFINITIONS

A. The following definitions apply to the Work of this Section:

1. Clearing is defined as cutting trees, shrubs and vegetation, removing fences and posts, removing curbs, pavements, and other improvements to prepare the site for grubbing and stripping.
2. Grubbing is defined as the below grade part of clearing to remove roots, small piping, irrigation systems, etc., to prepare the site for stripping.

3. Stripping is defined as removing a surface layer of soil and organic material, sod, top-soil, and other unsuitable material as defined in Section 02200, Earthwork, to a depth that earthwork can proceed.

PART 2 - PRODUCTS (NOT USED)

PART 3 - EXECUTION

3.1 GENERAL

A. Existing Conditions: The site shall be examined and the CONSTRUCTION MANAGER shall be notified of any conditions that affect the Work of this Section.

B. Utility Interference: Where existing utilities interfere with the Work of this Section, the CONSTRUCTION MANAGER shall be notified of interferences, and notifications to the OWNERS of the affected utilities shall be provided.

3.2 CLEARING, GRUBBING AND STRIPPING

A. Clearing, grubbing and stripping shall comply with the requirements of SSPWC Subsection 300-1 and the following:

1. All construction areas shall be cleared of grass and weeds to at least a depth of 6 inches and cleared of structures, AC, concrete or masonry debris, trees, logs, upturned stumps, loose boulders, and any other objectionable material of any kind which would interfere with the performance or completion of the Work, create a hazard to safety, or impair the Work's subsequent usefulness or obstruct its operation. Loose boulders within 10 feet of the top of cut lines shall be incorporated in landscaping or removed from the site. Trees and other natural vegetation outside the actual lines of construction shall be protected from damage during construction, as directed by the CONSTRUCTION MANAGER.
2. Within the limits of clearing, the areas below the natural ground surface shall be grubbed to a depth necessary to remove all stumps, roots, buried logs, and all other objectionable material. Septic tanks, drain fields, and connection lines and any other underground structures, debris or waste shall be totally removed if they are found on the site.
3. The entire area to be affected by construction shall be stripped of top soil to a depth to be determined by the CONSTRUCTION MANAGER during construction as successive 6-inch layers are removed to expose the underlying material. If the exposed material contains organic or other material not suitable for use as part of the earthwork in accordance with Section 02200, Earthwork, additional layers of material shall be removed, down to as much as 2.5 feet below the existing ground contours, until all the topsoil is removed.
4. Unless otherwise indicated, trees larger than 3 inches in diameter at the base shall not be removed without the CONSTRUCTION MANAGER's approval. The removal of any trees, shrubs, fences, or other improvements outside of rights-of-way

as deemed necessary, shall be arranged with the property owner and be removed and replaced at no increased cost to the OWNER.

5. Except in areas to be excavated, stump holes and other holes resulting from the Work shall be backfilled with suitable material in accordance with Section 02200, Earthwork.
6. Interfering low hanging branches and unsound or unsightly branches on trees or shrubs to remain, shall be removed as directed, but only after the CONSTRUCTION MANAGER has visited the site and provided written instructions.
7. Project site maintenance shall conform to SSPWC Section 3-12.

** END OF SECTION **

This page left intentionally blank.

SECTION 02140

DEWAWTERING

PART 1 - GENERAL

1.1 WORK OF THIS SECTION

A. The CONTRACTOR provide all labor, equipment, materials, and incidentals to perform site dewatering necessary to lower and control groundwater levels and hydrostatic pressures to allow excavation and construction to be performed properly under dry conditions. This Section includes materials, installation, maintenance, operation, and removal of temporary dewatering systems.

B. Dewatering operations shall be adequate to assure the integrity of the finished project. The responsibility for conducting the dewatering operation in a manner which will protect adjacent structures and facilities rests solely with the CONTRACTOR. The cost of repairing any damage to adjacent structures and restoration of facilities shall be the responsibility of the CONTRACTOR, and at no additional cost to the OWNER.

1.2 RELATED SECTIONS

A. The Work of the following Section applies to the Work of this Section. Other Sections, not referenced below, shall also apply to the extent required for proper performance of this Work.

1. Division 1, General Requirements.
2. Section 02160, Excavation Support Systems.
3. Section 02200, Earthwork.

1.3 REFERENCE SPECIFICATIONS, CODES AND STANDARDS

A. Except as otherwise indicated in this Section, the CONTRACTOR shall comply with the 2021 edition of the Standard Specifications for Public Works Construction (SSPWC) together with the latest adopted editions of the Regional and Supplement Amendments.

B. The CONTRACTOR shall comply with State Water Resources Control Board Water Quality Order No. 2003-0003-DWQ, Statewide General Waste Discharge Requirements (WDRs) for Discharges to Land with a Low Threat to Water Quality (General WDRs).

1.4 CONTRACTOR SUBMITTALS

A. The following shall be submitted in compliance with Division 1 of the Specifications:

1. Before starting excavation, the CONTRACTOR shall submit shop drawings including a detailed plan, schedule, and description of the dewatering of excavations. The shop drawings shall include: the proposed type of dewatering

system; the arrangement, location, and depths of system components; a complete description of the equipment and instrumentation to be used, with installation, operation and maintenance procedures; a description of the CONTRACTOR's means and methods for measuring groundwater levels and piezometric water levels; and the methods for disposal of dewatering effluent.

2. Before starting excavation, the CONTRACTOR shall submit copies of well installation permits.
3. Before starting excavation, the CONTRACTOR shall submit copies of its Regional Water Quality Control Board permit for dewatering discharges to the environment or permit for dewatering discharges to the City sewer system, as applicable.
4. The CONTRACTOR shall submit copies of well destruction permits, as applicable.

B. The CONTRACTOR shall submit a daily report that includes the following information:

1. Groundwater levels and piezometric water levels in observation wells (if any).
2. Changes in elevation of reference points as stated in subparagraph 1.5C to detect settlement in adjacent structures.
3. The average dewatering flow rate.
4. Water quality testing results as required by the Regional Water Quality Control Board and City of El Centro Wastewater Department, as applicable.

1.5 QUALITY ASSURANCE

A. The CONTRACTOR shall conduct a demonstration of its proposed system and shall provide verification that adequate personnel, materials, and equipment are available.

B. The CONTRACTOR shall maintain adequate control to ensure that the stability of excavated and constructed slopes is not adversely affected by water, that erosion is controlled, and that flooding of excavations or damage to structures does not occur.

C. Where critical structures or facilities exist immediately adjacent to areas of proposed dewatering, the CONTRACTOR shall establish reference points and shall observe the reference points at frequent intervals to detect any settlement which may occur.

PART 2 - PRODUCTS

2.1 MATERIALS AND EQUIPMENT

A. Dewatering, where indicated, includes well points, deep cased wells with submersible pumps, sump pumps, temporary pipelines for water disposal, rock or gravel placement, observation wells, and other means including standby pumping equipment maintained on the jobsite continuously.

B. The CONTRACTOR shall provide piezometers for monitoring groundwater levels, prior & during dewatering operations. The CONTRACTOR shall provide other instruments and measuring devices as required. The construction manager may direct at their sole

discretion, installation of additional piezometers. This shall be at no additional cost to the owner.

PART 3 - EXECUTION

3.1 GENERAL REQUIREMENTS

A. The CONTRACTOR is responsible for obtaining a permit for temporary construction dewatering. CONTRACTOR shall comply with the requirements of State Water Resources Control Board Water Quality Order No. 2003-0003-DWQ for construction dewatering discharges to land with a low threat to water quality Before starting dewatering operations, the CONTRACTOR shall obtain authorization, as required, for the disposal of groundwater. The CONTRACTOR shall comply with all applicable sampling, testing, monitoring, and reporting requirements.

B. The CONTRACTOR shall maintain an adequate system to lower and control the groundwater to permit excavation, construction of structures, and placement of fill materials specified to be performed under dry conditions. The construction manager, at their sole discretion, may require the groundwater level be additionally lowered. One hundred percent standby pumping capacity shall be available on-site at all times and shall be connected to the dewatering system piping to permit immediate use. In addition, standby ancillary equipment and appliances for all ordinary emergencies, and competent workmen for operation and maintenance of all dewatering equipment shall be on site at all times. Standby equipment shall include emergency power generation and automatic switchover to the emergency generator when normal power fails. Dewatering systems shall not be shut down between shifts, on holidays, on weekends, or during Work stoppages. The CONTRACTOR shall control surface water to prevent entry into excavations. At each excavation a sufficient number of temporary observation wells to continuously check the groundwater level shall be provided. Dewatering shall be continued until the structure has been completed and backfilled.

C. Sufficient dewatering equipment shall be installed to pre-drain the water-bearing strata below the bottom of foundations, drains, sewers, pipelines and other excavations.

D. The hydrostatic head in water-bearing strata below foundations, drains, sewers, water pipelines and trenches and other excavations shall be reduced to ensure that the water level and piezometric water levels are below the excavation surface at all times.

    1. The piezometric water level shall be maintained at all times a minimum of 2-feet below the excavation surface.

E. The system shall be placed into operation before excavation below groundwater level is started. The system shall be operated continuously 24 hours a day, 7 days a week until pipelines, drains, sewers and structures have been constructed, structures have been waterproofed or damp-proofed, fill and backfill materials have been placed, and dewatering is no longer required.

F. The site shall be graded to facilitate drainage and runoff shall be diverted from the excavations. Surface runoff shall be collected in shallow ditches around the perimeter of the excavations, drained to sumps, and pumped or drained by gravity away from the excavations.

G. Dewatering shall at all times be conducted to preserve the undisturbed bearing capacity of the subgrade soils at proposed bottom of excavation.

H. If foundation soils are disturbed or loosened by the upward seepage of water or an uncontrolled flow of water, the affected areas shall be excavated and replaced with drain rock or approved materials at no additional cost to the OWNER. Placement and compaction of fill material should be observed and tested by the geotechnical consultant.

I. Flotation of structures and facilities shall be prevented by maintaining a positive and continuous removal of water.

J. If well points or wells are used, they shall be adequately spaced to provide the necessary dewatering and shall be sand-packed and/or other means shall be used to prevent pumping of fine sands or silts from the subsurface. A continuous check shall be maintained to ensure that the subsurface soil is not being removed by the dewatering operation. If the discharge is shown to contain fines, sands, silts or subsurface soil, the contractor must take immediate steps to remedy the situation. The contractor is solely responsible for any settlement due to the removal of soils thru dewatering.

K. Water and debris shall be disposed of in a suitable manner in compliance with permit requirements and SSPWC Subsection 3-12.6.4, without damage to adjacent property. No water shall be drained into work built or under construction. Before disposal, water shall be treated in accordance with permit requirements. Before disposal, water shall be filtered to remove sand and fine-sized soil particles.

L. The release of groundwater to its original level shall be performed in a manner that avoids disturbance of natural foundation soils, prevents disturbance of compacted backfill, and prevents flotation or movement of structures and pipelines, and in accordance with all regulations and permit requirements.

** END OF SECTION **

SECTION 02160

EXCAVATION SUPPORT SYSTEMS

PART 1 - GENERAL

1.1 WORK OF THIS SECTION

A. The CONTRACTOR shall provide all labor, equipment, materials and incidentals to support temporary open excavations by means of sheet pilings, soldier piles and lagging, structural steel walls and struts, liner plates, timber, trench shields, or boxes, and man-hole shields or boxes. The CONTRACTOR shall be responsible for the design and selection of methods in conformance with the design criteria as specified herein.

B. The Work of this Section applies to temporary excavation support systems for demolition, construction of underground structures, installation of buried pipelines, and as required by applicable laws and regulations.

1.2 RELATED SECTIONS

A. The Work of the following Sections applies to the Work of this Section. Other Sections, not referenced below, shall also apply to the extent required for proper performance of this Work:

1. Division 1, General Requirements.
2. Section 02140, Dewatering.
3. Section 02200, Earthwork.
4. Section 03300, Cast-in-Place Concrete.
5. Section 05500, Miscellaneous Metals.

1.3 STANDARD SPECIFICATIONS

Except as otherwise indicated in this Section, the CONTRACTOR shall comply with the 2021 edition of the Standard Specifications for Public Works Construction (SSPWC) together with the latest adopted editions of the Regional and Supplement Amendments.

1.4 SPECIFICATIONS AND STANDARDS

A. Except as otherwise indicated, the current editions of the following apply to the Work of this Section:

1. ASTM A 36 Structural Steel.
2. ASTM A 328 Steel Sheet Piling.
3. AWS D1.1 Structural Welding Code-Steel.
4. UBC Chap. 25 Wood.
5. WCLIB Grading Rules.

6. WWPA Grading Rules.
7. AISC Manual of Steel Construction.

1.5 CONTRACTOR SUBMITTALS

A. The following shall be submitted in compliance with Division 1 of the Specifications:

1. The proposed excavation support system for each construction component where excavation support systems will be used.
2. Arrangement and details for each excavation support system, supporting design calculations, and construction methods to be used for the installation of each system.
3. Installation methods, connection details, bracing preloading, and jacking procedures for all excavation support elements. The submittal shall specifically include a discussion of installation procedures used to prevent damage to excavation support elements due to installation in the very dense soil and rock conditions expected in some areas.
4. Depths below the main excavation bottom elevation to which the support system will be installed.
5. Elevations of ground surface, struts, and shores, as applicable.
6. Permissible depth to which excavation may be carried before supports must be installed and preloaded.
7. Full excavation depth load to be carried by various support system members.
8. Bracing loads for various stages of excavation, bracing removal, and concrete placement.
9. Preloads as required.
10. Proposed sequence of strut and shore removal as applicable and as related to concrete placement and backfilling operations.
11. Prior to commencing work involving excavation support systems, the CONTRACTOR shall file with the CONSTRUCTION MANAGER for record six (6) copies of herein specified design drawings and supporting calculations and data as accepted by CAL/OSHA. Submittals for excavation support systems shall be submitted for record purposes only.

B. The above Shop Drawings shall be coordinated with other shop drawing submittals for work specified elsewhere in which support of excavation is required.

C. The proposed method of installing sheet piling if used, including sequence of installation, template, and equipment description.

D. Contingency plan for alternative procedures to be implemented if the excavation support system is found to perform unfavorably.

1.6 QUALITY ASSURANCE

A. Support of excavation shall be designed, and Shop Drawings and calculations signed, by a Professional Engineer, licensed to practice in the State of California and experienced in the design of excavation support systems. All design drawings and calculations shall be checked and initialed by a checker. The Professional Engineer shall maintain

professional liability insurance, and provide documentation of the insurance to the CONSTRUCTION MANAGER.

1. Excavation support systems shall conform to the requirements of California Code of Regulations, Title 8, Division 1, Chapter 4.
2. Excavation support systems shall conform to the requirements of Section 6705, California Labor Code, Shoring and Bracing.

1.7 DESIGN CRITERIA

A. In addition to the safety requirements of OSHA and CLC 6705, Shop Drawings with supporting calculations for the various excavation support systems shall be prepared in accordance with the following criteria:

1. Design the excavation support system and all components to support the earth pressures, unrelieved hydrostatic pressures, utility loads, equipment, traffic, and construction loads including impact, and other surcharge loads in such manner as will allow the safe and expeditious construction of the permanent structures, to minimize ground movement or settlement, and to prevent damage to or movement of adjacent buildings, structures, roadways and utilities.
2. Design support members to resist the maximum loads expected to occur during the excavation and support removal stages.
3. Design for staged removal shall conform to construction concrete placement, and backfill sequence. Design shall consider provisions for future construction, and limits on bracing level elevations as shown on the CONTRACTOR’s plans.
4. Maximum vertical center-to-center spacing of supports shall be 16 feet between top 2 support levels and 12 feet below second support level unless otherwise approved. If decking beams are not required, install the uppermost bracing tier at a vertical distance of not more than 6 feet below the top of excavation.
5. If unexpected running sand and silt is encountered, provide positive means for securing timber lagging to the soldier piles to avoid shifting or falling off of the lagging, and positive means for containing such material behind lagging, then discontinue excavation until dewatering is improved to reduce hydrostatic pressures. In general running sand is to be controlled by reduction of hydrostatic pressures by dewatering.
6. Acceptance of the CONTRACTOR's Shop Drawings and methods of construction by the CONSTRUCTION MANAGER does not relieve the CONTRACTOR of responsibility for the adequacy of the excavation support systems.
7. No portion of the excavation support system's vertical face will be permitted to penetrate the design lines as indicated on the Drawings for the permanent concrete structure to be constructed within the excavation.
8. Vertical support capacity shall be provided for wall systems and internal bracing elements, for loads due to vertical force components of tieback anchors, the weight of the structural systems themselves, and live load on any portion of the system.

B. Timber Support Systems and Members:

1. Basis for determination of minimum allowable working stress: UBC Chapter 25.
2. The minimum thickness of timber lagging between soldier piles spaced 5 to 7 feet center-to-center shall be 3 inches for excavations up to 25 feet in depth, and 4 inches for excavations deeper than 25 feet.
3. Design calculations shall be submitted for all conditions and types of lagging. The above minimum requirements do not relieve the CONTRACTOR of the responsibility to provide a safe and stable excavation.

C. Tie-Back Anchors

1. The CONTRACTOR shall secure all necessary easements for the use of tie-back anchors. The OWNER does not guarantee that easements for tied back anchors will be available.

1.8 SAFETY

A. Except as otherwise indicated, the following codes apply to the Work of this Section:

1. Title 8, California Administrative Code, Chapter 4, Subchapter 4, Construction Safety Orders, Article 6, Excavations, Trenches, Earthwork, Section 1542, Shafts.

1.9 PROJECT CONDITIONS

A. Utility agencies shall be notified and caution exercised while exposing utility facilities by hand or other methods approved by utility owner.

B. If existing utility facilities interfere with the proposed method of support, the method shall be modified in a manner that will protect the facility and accommodate the proposed Work. Shop Drawings shall be revised and resubmitted along with design calculations required to account for the modified support method and to show the actual location of the existing utilities.

C. Provisions shall be made for contingencies as follows:

1. Monitor performance of support system components, for both vertical and horizontal movement, at regular intervals not to exceed 3 days unless stable conditions can be documented. Monitoring may be performed weekly if the results of performance monitoring indicate stable conditions and the CONSTRUCTION MANAGER concurs that monitoring frequency can be reduced.
2. Provide contingency plan for alternative procedures to be implemented if unfavorable performance is evidenced.
3. Keep on hand materials and equipment necessary to implement contingency plan.

D. Elements of the support system shall not be spliced unless approved by the CONSTRUCTION MANAGER.

PART 2 - PRODUCTS

2.1 MATERIALS

A. Steel sheet piling shall be continuous interlocking type ASTM A 328 of appropriate shape and provided with at least one 2-1/2-inch-diameter handling hole on the centerline of the web located at least 6 inches from each end of the sheet pile.

B. Fabricated connections and accessories, steel H-piles, WF shapes, and other structural steel shall conform to the requirements of ASTM A 36, unless otherwise approved.

C. Concrete shall be as specified in Section 03300.

1. For encasement of steel soldier piles below the final level of excavation, 2,500 psi compressive strength concrete shall be used.
2. For encasement of soldier piles above the final level of excavation, lean concrete shall be used, the strength of which shall be approved by CONTRACTOR's design engineer and adequate to protect the excavated faces of the augured hole.

D. Wood lagging shall be dimension lumber with minimum allowable stress of 1100 psi.

1. The stress grade of the lagging shall be in conformance with the allowable stresses of the UBC, Chapter 25.
2. Lumber shall be grade marked by WWPA or WCLIB with species and grade conforming with those shown on approved Shop Drawings.
3. Lumber used in contact with ground water shall be treated with water-borne preservatives. Preservatives shall be limited to: Creosote or creosote solutions, Pentachlorphenol, Ammoniacal Copper Arsenate, and Chromated Copper Arsenate, as specified in SSPWC Section 204-2.

PART 3 - EXECUTION

3.1 GENERAL

A. The support system shall extend the main excavation bottom elevation to a depth adequate to prevent lateral movement and to adequately support applied vertical loads. In areas where additional excavation is required below the main excavation subgrade provisions shall be made to prevent movement of main excavation supports. Damage to existing utilities during installation of excavation support system shall be avoided.

B. Water control measures shall be provided in accordance with the requirements specified in Section 02140, Dewatering.

3.2 SOLDIER PILES

A. Soldier piles shall be installed by preboring or other approved pre-excavation methods to tip elevation shown on approved Shop Drawings. Prevent prebored or other pre-excavated holes from collapsing.

B. Prebored hole shall be filled with lean concrete from bottom of hole to subgrade dependent upon analysis of vertical support requirements.

C. Remaining pile length shall be filled with lean concrete, completely encasing the pile.

D. Concrete shall be placed from the bottom of the hole upwards by means of a flexible pipe connected to a hopper.

3.3 SHEETING AND LAGGING

A. Sheeting and lagging shall be installed with no gap between the boards unless specifically approved. As installation progresses, the voids between the excavation face and the lagging or sheeting shall be backfilled with sand or soil rammed into place. Materials such as hay or burlap shall be used where necessary to allow drainage of groundwater without loss of soil or packing material. If gaps in the lagging are allowed, the gap width between lagging boards shall be limited to 1/2-inch maximum.

B. If unstable material is encountered, suitable measures shall be taken to retain it in place or to otherwise prevent soil displacement.

C. Extend lagging down to final subgrade.

D. A sufficient quantity of material shall be on hand for sheeting, shoring, bracing, and other operations for protection of work and for use in case of accident or emergency.

3.4 STEEL SHEET PILING

A. Steel sheet piling may be used only where existing subsurface conditions are suitable for installation of sheet piling to the full depth of penetration required, and to proper alignment and plumb, specified herein, without damage to the sheet piling or rupture of its interlocks. The use of steel sheet piling will not be permitted where sheeting would be required to penetrate boulders, rock or other materials that may prevent the proper installation of sheet piling.

B. Steel sheet piling shall be installed in plumb position with each pile interlocked with adjoining piles for its entire length so as to form a continuous diaphragm throughout the length of each run of wall, bearing tightly against original ground. Install sheeting to depth required for design. Exercise care during installation so that interlocking members can be extracted, if required, without injury to adjacent ground. The installation equipment shall be suitable to the type and nature of the subsurface materials anticipated to be encountered. The equipment, and methods of installation, cutting, and splicing shall conform to the approved Shop Drawings.

3.5 INTERNAL BRACING SUPPORT SYSTEM

A. All bracing support members shall be installed and maintained in tight contact with each other and with the surface being supported.

B. Bracing members shall be preloaded by jacking the struts and shores in accordance with loads, methods, procedures, and sequence as described on the approved Shop Drawings. Coordinate excavation work with bracing installation and preloading. Use steel shims and steel wedges welded or bolted in place to maintain the preloading force in the bracing after release of the jacking equipment pressure. Use procedures so as to produce uniform bracing member loading without appreciable eccentricities, overstressing, or support member distortion.

C. Struts shall be provided with intermediate bracing as needed to enable them to carry their maximum design load without distortion or buckling. Provide diagonal bracing as necessary to maintain the stability of the system. Web stiffeners, plates, or angles shall be provided as needed to prevent rotation, crippling, or buckling of connectors at points of bearing between structural steel members. Allow for eccentricities resulting from field fabrication and assembly.

D. Excavations shall be to a depth no more than 2 feet below the elevation of the support member about to be placed. The support member shall be installed and preloaded immediately after installation and prior to continuing excavation.

3.6 REMOVAL OF SUPPORT SYSTEMS

A. Where removal is required wholly or in part, such removal shall be performed in a manner that will not disturb or damage adjacent new or existing construction or utilities. Fill all voids immediately with lean concrete, or by other approved means.

B. All elements of support systems shall be removed to a minimum depth of 6 feet below final ground surface. However, when a structure poured against the sheeting system extends above the 6-foot limit, removal of the sheeting system shall be to the top of the structure.

C. All damage to property resulting from removal shall be promptly repaired at no cost to the OWNER. The CONSTRUCTION MANAGER shall be the sole judge as to the extent and determination of the materials and methods for repair.

** END OF SECTION **

This page left blank intentionally

SECTION 02200

EARTHWORK

PART 1 - GENERAL

1.1 WORK OF THIS SECTION

The CONTRACTOR shall provide all labor, equipment, materials, and incidentals to perform all earthwork required for construction of the Work as shown on the plans and as specified herein. Work includes the loosening, removing, loading, transporting, depositing, and compacting all soil, rock, and other earth materials, wet and dry. The CONTRACTOR shall comply with all local, state, and federal safety and health standards, laws, and regulations.

1.2 DEFINITIONS

A. Fill material is defined as material used to raise the level of a portion of the site to the line and grade indicated.

B. Backfill material is defined as material used to refill an excavation. Backfill material is defined as starting 1-foot above the top of the pipe or conduit, or at the subgrade for cast-in-place structures such as slabs, footings, vaults, and valve boxes.

C. Bedding material is defined as material within the pipe zone that supports and surrounds the pipe or conduit.

D. Unless otherwise noted on the drawings, the pipe zone is generally defined as the area that extends to the limits of the trench sides from 6-inches below the bottom of the pipe to 1 foot above the top of the pipe.

1.3 RELATED SECTIONS

A. The Work of the following Sections applies to the Work of this Section. Other Sections, not referenced below, shall also apply to the extent required for proper performance of this Work:
   1. Division 1, General Requirements.
   2. Section 02100, Site Preparation.
   3. Section 02140, Dewatering.
   4. Section 03300, Cast-in-Place Concrete.

1.4 REFERENCE SPECIFICATIONS, CODES AND STANDARDS

A. Except as otherwise indicated in this Section, the CONTRACTOR shall comply with the 2021 edition of the Standard Specifications for Public Works Construction (SSPWC) together with the latest adopted editions of the Regional and Supplement Amendments.

B. The Work of this Section shall comply with current versions, with revisions, of the following:
   1. Uniform Building Code.
   2. Construction Safety Orders, Division of Industrial Safety, State of California.
   3. California Department of Transportation Traffic Manual.

1.5 CONTRACTOR SUBMITTALS

A. The CONTRACTOR shall submit the following in compliance with Division 1 of the Specifications:
   1. A copy of the excavation permit issued by the California Department of Industrial Safety.
   2. Samples of imported material in accordance with SSPWC Subsection 217-2.
   3. Such other samples of materials as the CONSTRUCTION MANAGER may require.

PART 2 - PRODUCTS

2.1 FILL AND BACKFILL MATERIALS

A. General: Fill and backfill material shall consist of select material obtained from the excavation, imported material, bedding material, or unclassified material. The CONTRACTOR shall import, at his own expense, materials in excess of the approved material obtained from excavation as required to complete the fill, backfill, and grading Work as indicated.

B. Select Material: Select material shall consist of primarily granular material obtained from the excavation which is free of vegetation, organic matter, rubbish, debris, rocks larger than 4-inches in diameter and other unsuitable material, has an expansion index less than 20 as determined by UBC Standard No. 29-2, has a plasticity index of 10 or less, has a liquid limit of 30 or less, and is approved as select material by the CONSTRUCTION MANAGER.

C. Imported Material: Imported material shall conform to the same specifications as select material defined above. In addition, the imported materials shall comply with SSPWC subsection 217-2. Imported material placed in areas to be planted shall be able to support normal plant growth. The CONTRACTOR shall obtain approval by the CONSTRUCTION MANAGER before transporting imported material.

D. Bedding Material: Bedding material shall be sand, gravel, crushed aggregate, or free draining material in accordance with SSPWC Subsection 217-1, including the Regional and Supplement Amendments.

E. Unclassified Material: Unclassified material shall conform to SSPWC Subsection 300-4.

F. Structural Backfill: Structural backfill shall be crushed aggregate base per SSPWC Subsection 200-2.2 or crushed miscellaneous base per SSPWC Subsection 200-2.4.

2.2 ROCK PRODUCTS

Rock products, consisting of crushed rock, rock dust, gravel, sand, and stone for riprap shall be clean, hard, sound, durable, uniform in quality and free of disintegrated material, organic matter, oil, alkali, or other deleterious substance, and shall unless otherwise specified conform to the requirements of SSPWC Subsection 200-1, including the Regional and Supplement Amendments.

2.3 UNTREATED BASE MATERIALS

A. Untreated base materials shall conform to the requirements of SSPWC Subsection 200-2.

B. Materials for use as untreated base or subbase shall be:
   1. Crushed Aggregate Base.
   2. Crushed Miscellaneous Base.

2.4 PIPELINE MARKING TAPE

A. Detectable warning tape shall be provided and installed along the entire length all buried pipelines. Tape shall be impervious to alkalis, acids, chemicals, and solvents which are likely in the soil. Tape shall be 12-inches wide and lettering shall be 1-inch tall permanent black on a blue background. Lettering shall read: " WATER LINE BURIED BELOW, “Sewer Line Buried Below,” or “Electric Line Buried Below” As appropriate.

PART 3 - EXECUTION

3.1 GENERAL

A. The CONTRACTOR shall perform earthwork as necessary to complete the Work as shown on the Contract Drawings and specified herein. The CONTRACTOR shall take the necessary precautionary measures to prevent dust or other nuisances which might be created by reason of his activities. The necessary precautionary measures shall conform to the requirements of SSPWC Subsection 3-12. The requirements specified in Subsection 3-12 shall be extended to include paved surfaces.

B. All types of earthwork, including trench, structural and general excavation, fill, backfill and compaction, shall conform to applicable requirements of the SSPWC Section 300 and to the requirements specified herein.

C. Pursuant to California Code of Regulations, Title 8, Section 1541, the CONTRACTOR shall notify the Regional Notification Center and known owners of underground facilities in the area who are not members of the Regional Notification Center of the proposed excavation at least two working days before the start of excavation.

3.2 SITE PREPARATION

Areas to be excavated, filled, graded, or to be occupied by permanent construction or embankments shall be prepared by clearing, grubbing, and stripping. Clearing, grubbing, and stripping shall conform to the applicable requirements of SSPWC Subsection 300-1 and Section 02100. The CONTRACTOR shall provide for a Storm Water Pollution Prevention Plan in accordance with the requirements of Division 1 of the Specifications.

3.3 EXCAVATION

A. General: Except when specifically provided to the contrary, excavation shall include the removal of all materials of whatever nature encountered, including all obstructions of any nature that would interfere with the proper execution and completion of the work. Unless otherwise directed, the removal of said materials shall conform to the lines and grades shown. Unless otherwise provided, the entire construction site shall be stripped of all vegetation and debris, and such material shall be removed from the site prior to performing any excavation or placing any fill. The CONTRACTOR shall furnish, place, and maintain all supports and shoring that may be required for the sides of the excavations, and all pumping, ditching, or other measures for the removal or exclusion of water as required by Section 02140, Dewatering. Excavations shall be sloped or otherwise supported in a safe manner in accordance with the rules, orders, and regulations of the Division of Industrial Safety of the State of California.

B. Unclassified Excavation: Unclassified excavation shall consist of all excavation, including roadways, unless separately designated.
   1. Unsuitable material shall be excavated and disposed of in accordance with the requirements of SSPWC Subsection 300-2.2.
   2. Wet material, if unsatisfactory for the specified use on the project solely because of high moisture content, may be processed to reduce the moisture content, or may be required to be removed and replaced with suitable material in accordance with the requirements of SSPWC Subsection 300-2.2.2.
   3. The removal and disposal of slide and slipout material shall be in accordance with SSPWC Subsection 300-2.4.
   4. Excavation slopes shall be finished in conformance with the lines and grades shown, and in accordance with SSPWC Subsection 300-2.5.
   5. Surplus material shall be disposed of off-site, and in accordance with SSPWC Subsection 300-2.6.

C. Excavation Beneath Structures: Excavation under all structures, including slabs, footings, and foundations, shall extend a minimum of 12-inches below the bottom of the proposed structure. After reaching the final excavation subgrade, the subgrade shall be scarified to a depth of 6-inches, moisture-conditioned, and shall be compacted to 95 percent of maximum dry density. Following subgrade compaction, structural backfill, as described in Part 2.1.F shall be placed and compacted to 95 percent of maximum dry density. The backfill shall be graded and compacted to provide a smooth surface for construction of the structures.

D. Underground Pipe and Conduit Excavation
   1. General: Excavation for underground pipe or conduits shall be in accordance with SSPWC Subsection 306-3 and the requirements contained herein. Unless otherwise shown or ordered, excavation for pipelines and utilities shall be open-cut trenches. Trench widths shall be kept as narrow as is practical for the method of pipe zone densification selected by the CONTRACTOR.
   2. Sheeting, Shoring, and Bracing of Excavations: The manner of sheeting, shoring, and bracing excavations shall be as set forth in the rules, orders and regulations of the Division of Industrial Safety of the State of California, and in accordance with the requirements of SSPWC Subsection 306-4. Sheeting, shoring and bracing shall be provided for the protection of life and limb, for the protection of existing underground and above ground structures and improvements, and shall conform to applicable safety orders. Sheeting, shoring and bracing shall be provided to prevent trench sluffing, pavement separation and similar problems during construction, and shall include furnishing, installation, maintenance, and removal.
   3. Trench Bottom: Except when pipe bedding is required, the bottom of the trench shall be excavated uniformly to the grade of the bottom of the pipe. The trench bottom shall be given a final trim, using a string line for establishing grade, such that each pipe section when first laid will be continually in contact with the ground along the extreme bottom of the pipe. Rounding out the trench to form a cradle for the pipe will not be required.
   4. Open Trench: The maximum length of open trench permitted in any one location shall be 200 feet. All trenches shall be fully backfilled at the end of each day or, in lieu thereof, shall be covered by heavy steel plates adequately braced and capable of supporting vehicular traffic in those locations where it is impractical to backfill at the end of each day. The top of the steel plates shall be set flush with the top of the adjacent pavement, and the plates shall be surfaced for improved vehicular traction. The above requirements for backfilling or use of steel plate will be waived in cases where the trench is located further than 100-feet from any traveled roadway or occupied structure. In such cases, however, the CONTRACTOR shall provide and maintain barricades and warning lights conforming to requirements set forth in the California Department of Transportation Traffic Manual. Variations in these requirements shall be approved by the CONSTRUCTION MANAGER in advance.
   5. Trench Over-Excavation: Where the Drawings indicate that trenches shall be over-excavated, they shall be excavated to the depth required, and then backfilled to the grade of the bottom of the pipe.
   6. Where pipelines are to be installed in embankment fills, the fill shall be constructed to a level at least one-foot above the top of the pipe before the trench is excavated.

E. Over-Excavation Ordered by CONSTRUCTION MANAGER: Trenches shall be over-excavated beyond the depth shown when required by the CONSTRUCTION MANAGER. Such over-excavation shall be to the depth ordered by the CONSTRUCTION MANAGER. The over-excavation shall then be backfilled using 3/4-inch crushed rock underlain by an approved woven geotextile. The CONTRACTOR shall then place bedding material over the crushed aggregate. All work specified in this Section shall be performed by the CONTRACTOR at no additional cost to the OWNER when the over-excavation ordered by the CONSTRUCTION MANAGER is within 6

inches of the limit shown on the Drawings. When the over-excavation ordered by the CONSTRUCTION MANAGER is greater than 6 inches more than the limit shown on the Drawings, additional payment will be made to the CONTRACTOR for the portion that exceeds the said 6-inch distance.

F. Over-Excavation Not Ordered or Indicated: Any over-excavation carried below the grade indicated on the Drawings or carried below the grade ordered by the CONSTRUCTION MANAGER, shall be backfilled to the required grade with material specified by the CONSTRUCTION MANAGER and the material shall be compacted. Such work shall be performed by the CONTRACTOR at no additional cost to the OWNER.

3.4 FILL AND BACKFILL

A. General
1. Fill and backfill shall be placed in accordance with the applicable provisions of SSPWC Section 300-7.4 and the requirements stated herein.
2. Backfill shall not be dropped directly upon any structure or pipe. Backfill shall not be placed around or upon any concrete structure until the concrete has cured in accordance with the requirements of Section 03300, Cast-in-Place Concrete and has attained sufficient strength to withstand the loads imposed. Backfill around water retaining structures shall not be placed until the structures have been tested, and the structures shall be full of water while backfill is being placed.

B. Placing and Spreading of Materials
1. Materials shall be placed and spread evenly in layers. When compaction is achieved using hand operated mechanical equipment the layers shall be evenly spread so that when compacted each layer shall not exceed 4 inches in thickness. When compaction is performed with larger ride-on compaction equipment, the layers shall be spread so that when compacted, each layer shall not exceed 8-inches in thickness. Compaction by using flooding and jetting methods shall not be performed.
2. During spreading, each layer shall be thoroughly mixed as necessary to promote uniformity of material in each layer. Bedding materials shall be brought up evenly around the pipe so that when compacted the material will provide uniform bearing and side support.
3. Where the material moisture content is below the optimum moisture content water shall be added before or during spreading until the proper moisture content is achieved.
4. Where the material moisture content is too high to permit the specified degree of compaction the material shall be dried until the moisture content is satisfactory.

C. Compaction Requirements
1. The Contractor shall have density and compaction tests performed in accordance with SSPWC Subsection 211-1.

2. The relative compaction of fill, backfill, and base material shall be in accordance with SSPWC Section 300-7.4, with the following exceptions:

a. Fill beneath structures: 95%
b. Subgrade where trench has been over-excavated: 95%

3. In case the tests of the fill or backfill show non-compliance with the specified compaction or density requirements, the CONTRACTOR shall accomplish such remedy as may be necessary to assure compliance. Subsequent testing to show compliance with the specifications shall be performed by a testing laboratory selected by the OWNER, and the CONTRACTOR shall pay all costs for retesting of fill or backfill caused by non-compliance with these specifications, and at no additional cost to the OWNER.

D. Unclassified Fill: All fill shall be of unclassified material unless separately designated. Construction of unclassified fill, including preparing the area on which fill is to be placed, and the depositing, conditioning, and compacting of fill material shall be in accordance with SSPWC Subsection 300-4.

E. Structure Backfill: Structure backfill, per Section 2.1F, shall be placed in accordance with SSPWC Subsections 300-3.5 and 300-4.5. Structural backfill shall be kept moist during construction.

F. Underground Pipe and Conduit Bedding and Backfill
1. Bedding around pipe or conduit shall be bedding material placed in accordance with the requirements of SSPWC Subsection 306-6 except as noted. Bedding material shall be sand, gravel, crushed rock, or native free-draining granular material having a sand equivalent of not less than 50 and an expansion when saturated with water of not more than 0.5 percent. Bedding material shall be mechanically compacted. The relative compaction of the pipe or conduit bedding shall be 90 percent. Neither flooding nor jetting will be allowed for compaction of the bedding.
2. If bedding material consists primarily of gravel or crushed rock, the bedding material shall be wrapped using an approved non-woven geotextile filter fabric. Geotextile filter fabric will not be required where sand is used for bedding material or where the excavation is through rock.
3. Upon completion of the bedding and following placement of the pipe or conduit, trench backfill shall be placed and compacted in accordance with SSPWC Subsection 306-12. Backfill shall be select material. Where imported material is used for trench backfill and has a sand equivalent of 30 or more, it may be water jetted in accordance with the requirements of SSPWC Subsection 306-12.4, otherwise trench backfill shall be mechanically compacted. Mechanically-compacted trench backfill shall be placed in accordance with the requirements of SSPWC Subsection 306-12.3.
4. Trench backfill shall be compacted to obtain a minimum 90 percent relative compaction. The top foot of the trench backfill shall be compacted to a minimum 95 percent relative compaction except in unimproved areas. Only lightweight tamping equipment shall be used within 3 feet of the pipe, conduit, or appurtenance. Soil density testing will be performed by a qualified testing laboratory selected by the OWNER.

5. Separate payment for imported backfill will be made only when select material from the excavation is unavailable, when the excavation is in heavy clay, when the excavation is in highly expansive soil, or when the soil has other deleterious properties as determined by the CONSTRUCTION MANAGER. The CONSTRUCTION MANAGER will determine whether the excavated material is suitable for backfill and when separate payment will be made for imported backfill. Where imported backfill is required, the unit price bid, or agreed upon by the CONSTRUCTION MANAGER, for imported backfill shall include the cost for disposal of all unsuitable materials excavated from the trench.

3.5 PREPARATION OF SUBGRADE

A. Subgrade Beneath Structures: Prior to placement of structural backfill, the subgrade beneath structures shall be scarified to a depth of 6-inches, moisture-conditioned, and shall be compacted to 95 percent of maximum dry density in accordance with SSPWC Subsection 301-1.

B. The preparation of subgrade for pavement, curbs and gutters, driveways, sidewalks and other roadway structures shall be in accordance with SSPWC Subsection 301-1.

3.6 UNTREATED BASE

Aggregate base material shall be spread and compacted in accordance with SSPWC Subsection 301-2.

3.7 TEMPORARY STOCKPILES

A. Locations of temporary stockpiles shall be approved by the CONSTRUCTION MANAGER.

B. Temporary stockpiles shall not be allowed to surcharge buried pipe, conduits, or other structures.

** END OF SECTION **

SECTION 02270

EROSION, SEDIMENTATION AND DUST CONTROL

PART 1 - GENERAL

1.1 WORK OF THIS SECTION

A. The CONTRACTOR shall provide all labor, equipment, materials and incidentals to establish and maintain control measures to control erosion, sedimentation, and airborne dust as required by local regulations and by the OWNER, as shown on the Drawings and as specified herein during the period of the contract.

B. The CONTRACTOR shall establish, construct, and maintain erosion and sediment control measures. Silt control devices shall be installed in the appropriate locations before construction begins. Erosion control structures and measures shall be maintained until temporary ground cover is established to stop all sediment and erosion. All fines imposed for improper erosion and sedimentation control shall be paid by the CONTRACTOR responsible for the work, and no separate or additional compensation will be made.

C. Temporary erosion and pollution control shall include construction work off-site where such work is necessary for borrow pit operations, haul roads, material stockpiles, or equipment storage sites.

D. The CONTRACTOR shall acquire land disturbance permits from the local authority prior to commencing work. The CONTRACTOR shall be responsible for submitting to the local authority sufficient documents such that the local authority can acquire approval from the soils and water conservation authority having jurisdiction over the Work.

E. The CONTRACTOR shall install temporary erosion and sediment controls to assure that any storm water, other water, and drainage from job site areas that may be stripped or modified of naturally existing or artificially established stabilization or protection against erosion shall pass through some type of filter system before being discharged, The CONTRACTOR shall be responsible for keeping all job site areas sufficiently moist to control dust.

1.2 SLOPE PROTECTION AND EROSION CONTROL

A. Whenever steeper slopes or abrupt changes in grade are required, a diversion berm or ditch shall be constructed at the top of the slope to cause the surface water to flow along the diversion to a controlled down slope drainage. The diversion shall be protected against erosion with mulch or hay bales and paved inverts where needed.

B. Silt barriers shall be constructed and maintained around all inlets throughout the construction period. Sediment accumulated behind silt barriers shall be removed when the ponding capacity behind the barrier is reduced by one-half.

1.3 SILTATION FENCES

A. Silt fences shall be installed in the locations as indicated on the Drawings. Silt fences shall be installed prior to clearing operations. Silt fences shall be kept in good repair and maintained throughout construction. Sediment shall be removed when the ponding capacity is reduced by one-half.

B. Silt fences or barriers shall be constructed around all inlets to the stormwater system. They shall be repaired and maintained throughout construction. Sediment shall be removed when the ponding capacity behind the barrier is reduced by one-half.

1.4 DUST CONTROL

The CONTRACTOR shall exercise precautionary measures to minimize dust emissions. This shall include, but is not limited to, periodic sprinkling or wetting of the site. The CONTRACTOR has the option of using a dust palliative. The CONTRACTOR must comply with all local air quality or other environmental requirements.

PART 2 - PRODUCTS

2.1 SILT FENCE

Silt fence shall be nylon reinforced polyester netting with fabric weight in excess of 4.0 ounces per yard and having a built-in cord running throughout the top edge of the fabric. Silt fence fabric shall be equal to Mirafi 100X, inert to chemicals commonly found in soil, and resistant to mildew, rot, insects, and rodent attack. Posts shall be either steel or 2-inch square pressure treated fir, southern pine or hemlock and shall be spaced not more than 6-feet on center.

2.2 STRAW BALES

Straw bales shall consist of clean, undecayed, firmly packed straw of nominal size 14-inches by 18-inches by 36-inches and firmly bound by at least two separate circuits of rope or band material that will withstand weathering for a minimum of three months.

PART 3 - EXECUTION

3.1 INSTALLATION

A. Silt fences shall be installed by securely fastening silt fence fabric using wire ties. The silt fence shall be installed loosely with adjacent panels overlapped a minimum of 12-inches. Silt fence material shall be embedded at least six inches beneath ground surface and shall extend upward at least 1.5-feet above the disturbed area ground surface. The top edge of the fabric shall be reinforced or shall have a one-inch tuck.

B. Straw bales shall be installed in a row with ends tightly abutting. Each bale shall be embedded in the soil a minimum of four inches and placed so that the bale bindings are oriented horizontally. Bales shall be securely anchored in place by wood stakes, steel fence pickets, or rebar driven through the bale. Stakes shall be driven flush with the bale and shall extend at least 18-inches beneath the bale into the underlying soil.

C. Accumulated silt and debris shall be removed by the CONTRACTOR from behind the face of the silt fences as necessary to provide proper silt fence operation and when the ponding capacity is reduced by one-half. Clogged or damaged fabric shall be immediately replaced at no additional cost to the OWNER.

D. Accumulated silt and debris and damaged or deteriorated bales shall be removed by the CONTRACTOR at no additional cost.

E. Temporary construction exits shall be maintained in a condition that will prevent tracking or flow of mud out of the work area or onto public roads.

3.2 PROVISIONS FOR EROSION CONTROL DURING CONSTRUCTION

A. The CONTRACTOR shall implement erosion control measures around all areas to be disturbed prior to disturbing ground in the area, to the satisfaction of the CONSTRUCTION MANAGER. The CONSTRUCTION MANAGER will periodically inspect erosion control structures to confirm that the CONTRACTOR is maintaining these features.

B. The CONTRACTOR shall take sufficient precautions during construction to eliminate run-off of polluting substances such as silt, clay, wastes, fuels, oils, and bitumen into water supplies and surface waters. Special precautions shall be taken in the use of construction equipment to conduct operations in a manner that reduces erosion.

C. The temporary drainage ditches, silt fences, and other erosion and sediment control features shall be maintained at locations identified by the CONSTRUCTION MANAGER.

D. Disposal of drainage from the site shall be at a location approved by the CONSTRUCTION MANAGER. Drainage shall not be disposed of until silt and other sedimentary materials have been removed. Particular care shall be taken to prevent the discharge of unsuitable drainage to a water supply or surface water body.

E. As a minimum, the following shall apply:

1. Staked bales of straw or approved silt fencing shall be provided at points where drainage from the work site leaves the site, to reduce the sediment content of the water. Sufficient bales of straw or silt fence shall be provided such that all flow will filter through the straw or silt fence. Other methods, which reduce the sediment content to an equal or greater degree, may be used as approved by the CONSTRUCTION MANAGER.

F. Drainage leaving the site shall flow to natural water drainage courses in a manner that controls and prevents erosion of the drainage channels.

** END OF SECTION **

SECTION 03100

CONCRETE FORMWORK

PART 1 - GENERAL

1.1 WORK OF THIS SECTION

A. Scope:

1. CONTRACTOR shall provide all labor, materials, equipment and incidentals as shown, specified and required to furnish and install concrete formwork. The Work also includes:

    a. Providing openings in formwork to accommodate the Work under this and other Sections and building into the formwork all items such as sleeves, anchor bolts, inserts and all other items to be embedded in concrete for which placement is not specifically provided under other Sections.

B. Coordination: Review installation procedures under other Sections and coordinate the installation of items that must be installed with the formwork.

C. Related Sections:

1. Section 03200, Concrete Reinforcement.
2. Section 03251, Concrete Joints.
3. Section 03300, Cast-In-Place Concrete.

1.2 QUALITY ASSURANCE

A. Substratum Conditions:

CONTRACTOR shall examine the substratum and the conditions under which concrete framework is to be performed, and notify the CONSTRUCTION MANAGER in writing of unsatisfactory conditions. Do not proceed with the Work until unsatisfactory conditions have been corrected in a manner acceptable to the CONSTRUCTION MANAGER

B. Reference Standards: Comply with applicable provisions and recommendations of the following, except as otherwise shown or specified:

1. ACI 301, Specifications for Structural Concrete.
2. ACI 347, Recommended Practice for Concrete Formwork.
3. US Product Standard, PS-1.
4. Uniform Building Code (UBC) of the International Conference of Building Officials (ICBO), latest edition.
5. ACI 117, Standard Tolerances for Concrete Construction and Materials.

C. Allowable Tolerances:

1. Variation from plumb:

   a. In lines and surfaces of columns, piers, walls, and in risers.
      (i) Maximum in any 10-feet of height: 1/4-inch.
      (ii) Maximum for entire height: ½-inch.
   b. For exposed corner columns, control-joint grooves, and other exposed to view lines:
      (i) Maximum in any 20-foot length: 1/4-inch.
      (ii) Maximum for entire length: ½-inch.

2. Variation from level or from grades specified:

   a. In slab soffits, ceilings, beam soffits and in arises, measured before removal of supporting shores.
      (i) Maximum in any 10-feet of length: 1/4-inch.
      (ii) Maximum in any bay or in any 20-foot length: 3/8-inch.
      (iii)Maximum for entire length: ½-inch.
   b. In exposed lintels, sills, parapets, horizontal grooves, and other exposed to view lines:
   c. Maximum in any bay or in 20-foot length: 1/4-inch.
   d. Maximum for entire length: ½-inch.

3. Variation of linear structure lines from established position in plan and related position of columns, walls, and partitions.

   a. Maximum in any bay: ½-inch.
   b. Maximum in any 20-foot of length: ½-inch.
   c. Maximum for entire length: 1 inch.

4. Variation in sizes and location of sleeves, floor openings, and wall openings: Maximum of ½-inch.
5. Variation in horizontal plan location of beam, column and wall center lines from required location: Maximum of ½-inch.
6. Variation in cross sectional dimensions of columns and beams and in thickness of slabs and walls: Maximum of -1/4-inch, +1/2-inch.
7. Footings and foundations:

   a. Variations in concrete dimensions in plan: -1/2-inch, +2-inch.
   b. Misplacement or eccentricity:
      (i) Two percent of footing width in direction of misplacement but not more than 2-inch.
   c. Thickness:
      (i) Decrease in specified thickness: 5 percent.
      (ii) Increase in specified thickness: No limit except that which may interfere with other construction.

8. Variation in steps:

   a. In a flight of stairs:
      (i) Rise: 1/8-inch.
      (ii) Tread: 1/4-inch.
   b. In consecutive steps:
      (i) Rise: 1/16-inch.
      (ii) Tread: 1/8-inch.

D. All items for permanent or temporary facilities shall be used in accordance with manufacturer's instructions.

1.3 SUBMITTALS

A. Shop Drawings: Submit for information purposes copies of manufacturer's data and installation instructions for proprietary materials, including form coatings, manufactured form systems, ties and accessories.

B. Falsework Calculations and Drawings: All falsework or vertical shoring installation, where the height of the top of the sill to the soffit of the superstructure, exceeds 14 feet or where individual horizontal span length exceeds 16 feet shall be signed by a Civil Engineer, registered in the State of California. The CONTRACTOR shall submit calculations and drawings to the OWNER for their review and approval.

1.4 PRODUCT DELIVERY, STORAGE AND HANDLING

A. On delivery to job site, place materials in area protected from weather.

B. Store materials above ground on framework or blocking. Cover wood for forms with protective waterproof covering. Provide for adequate air circulation or ventilation.

C. Handle materials to prevent damage.

PART 2 - PRODUCTS

2.1 FORM MATERIALS

A. Forms for Exposed Finish Concrete: Unless otherwise shown or specified, construct formwork for exposed concrete surfaces with plywood, metal, metal-framed plywood-faced or other panel type materials acceptable to CONSTRUCTION MANAGER, to provide continuous, straight, smooth as-cast surfaces. Furnish in largest practical sizes to minimize number of joints and to conform to joint system shown or specified. Provide form material with sufficient thickness to withstand pressure of newly placed concrete without bow or deflection.

B. Forms for Unexposed Finish Concrete: Form concrete surfaces that will be unexposed in the finished structure with plywood, lumber, metal, or other acceptable material. Provide lumber that is dressed on at least 2 edges and 1 side.

C. Form Ties:

1. Provide factory-fabricated, removable or snapoff metal form ties, designed to prevent form deflection, and to prevent spalling of concrete surfaces upon removal. Materials used for tying forms will be subject to approval of CONSTRUCTION MANAGER. Manufacturers: Burke Penta by the Burke Company, Richmond Snap Tys by the Richmond Screw Anchor Company, or equal.
2. Unless otherwise shown, provide ties so that portion remaining within concrete after removal of exterior parts is at least 1 inch from the outer concrete surface. Unless otherwise shown, provide form ties that will leave a hole no larger than 1-inch diameter in the concrete surface.
3. Ties for exterior walls and walls subject to hydrostatic pressure shall have waterstops. A preformed neoprene or polyurethane tapered plug sized to seat at the center of the wall shall be inserted in the hole left by the removal of the taper tie. Manufacturers: Burke Taper by the Burke Company or Taper Tye by the Richmond Screw Anchor Company, or equal.
4. Provide wood or plastic cones for ties, where concrete is exposed in the finish structure and in the interior of tanks.

D. Forms Coatings: Provide commercial formulation form-coating compounds that will not bond with, stain, nor adversely affect concrete surfaces, and will not impair subsequent treatment of concrete surfaces requiring bond or adhesion, nor impede the wetting of surfaces to be cured with water or curing compounds. For concrete surfaces which will be in contact with potable water, the form coating shall be a mineral oil base coating.

2.2 DESIGN OF FORMWORK

A. Design, erect, support, brace and maintain formwork so that it shall safely support vertical and lateral loads that might be applied, until such loads can be supported by the concrete structure. Carry vertical and lateral loads to ground by formwork system or in-place construction that has attained adequate strength for this purpose. Construct formwork so that concrete members and structures are of correct size, shape, alignment, elevation and position.

B. Design forms and falsework to include values of live load, dead load, weight of moving equipment operated on formwork, concrete mix, height of concrete drop, vibrator frequency, ambient temperature, foundation pressures, stresses, lateral stability, and other factors pertinent to safety of structure during construction. Design live load for forms and falsework to support elevated slabs shall be 50 psf (minimum).

C. Provide shores and struts with positive means of adjustment capable of taking up formwork settlement during concrete placing operations, using wedges or jacks or a

combination thereof. Provide trussed supports when adequate foundations for shores and struts cannot be secured.

D. Support form facing materials by structural members spaced sufficiently close to prevent significant deflection. Fit forms placed in successive units for continuous surfaces to accurate alignment, free from irregularities and within allowable tolerances. For long span members without intermediate supports, provide camber in formwork as required for anticipated deflections resulting from weight and pressure of fresh concrete and construction loads.

E. Design formwork to be readily removable without impact, shock or damage to concrete surfaces and adjacent materials.

F. Provide formwork sufficiently tight to prevent leakage of cement paste during concrete placement. Solidly butt joints and provide backup material at joints as required to prevent leakage and fins.

PART 3 - EXECUTION

3.1 GENERAL

A. Forms to confine the concrete and shape it to the required lines shall be used wherever necessary. The CONTRACTOR shall assume full responsibility for the adequate design of all forms, and any forms which are unsafe or inadequate in any respect shall promptly be removed from the Work and replaced at the CONTRACTOR's expense. A sufficient number of forms of each kind shall be provided to permit the required rate of progress to be maintained. The design and inspection of concrete forms, falsework, and shoring shall comply with applicable local, state and Federal regulations. Plumb and string lines shall be installed before concrete placement and shall be maintained during placement. Such lines shall be used by CONTRACTOR's personnel and by the CONSTRUCTION MANAGER and shall be in sufficient number and properly installed. During concrete placement, the CONTRACTOR shall continually monitor plumb and string line form positions and immediately correct deficiencies.

B. Concrete forms shall conform to the shape, lines, and dimensions of members as called for on the Drawings, and shall be substantial, free from surface defects, and sufficiently tight to prevent leakage. Forms shall be properly braced or tied together to maintain their position and shape under a load of freshly-placed concrete. If adequate foundation for shores cannot be secured, trussed supports shall be provided.

C. CONTRACTOR and his installer shall examine the substrate and the conditions under which Work is to be performed and notify CONSTRUCTION MANAGER of unsatisfactory conditions. Do not proceed with the Work until unsatisfactory conditions have been corrected in a manner acceptable to CONSTRUCTION MANAGER.

3.2 FORM CONSTRUCTION

A. General: Construct forms complying with ACI 347; to the exact sizes, shapes, lines and dimensions shown; as required to obtain accurate alignment, location and grades; to tolerances specified; and to obtain level and plumb work in finish structures. Provide for openings, offsets, keyways, recesses, moldings, rustications, reglets, chamfers, blocking, screeds, bulkheads, anchorages and inserts, and other features required. Use selected materials to obtain required finishes. Finish shall be as determined by approved mock-up or sample panel, if specified.

B. Fabricate forms for easy removal without damaging concrete surfaces. Provide crush plates or wrecking plates where stripping may damage cast concrete surfaces. Provide top forms for inclined surfaces where the slope is too steep to place concrete with bottom forms only. Kerf wood inserts for forming keyways, reglets, recesses, and the like, to prevent swelling and assure ease of removal.

C. Provide temporary openings where interior area of formwork is inaccessible for cleanout, for inspection before concrete placement, and for placement of concrete. Brace temporary closures and set tightly to forms to prevent loss of concrete mortar. Locate temporary openings on forms in locations as inconspicuous as possible, consistent with requirements of the Work. Form intersecting planes of openings to provide true, clean-cut corners, with edge grain of plywood not exposed as form for concrete.

D. Falsework:

1. Erect falsework and support, brace and maintain it to safely support vertical, lateral and asymmetrical loads applied until such loads can be supported by in-place concrete structures. Construct falsework so that adjustments can be made for take-up and settlement.
2. Provide wedges, jacks or camber strips to facilitate vertical adjustments. Carefully inspect falsework and formwork during and after concrete placement operations to determine abnormal deflection or signs of failure; make necessary adjustments to produce finished Work of required dimensions.

E. Forms for Exposed to View Concrete:

1. Do not use metal cover plates for patching holes or defects in forms.
2. Provide sharp, clean corners at intersecting planes, without visible edges or offsets. Back joints with extra studs or girts to maintain true, square intersections.
3. Use extra studs, walers and bracing to prevent bowing of forms between studs and to avoid bowed appearance in concrete. Do not use narrow strips of form material that will produce bow.
4. Assemble forms so they may be readily removed without damage to exposed concrete surfaces.
5. Form molding shapes, recesses, rustication joints and projections with smooth-finish materials, and install in forms with sealed joints to prevent displacement.

F. Corner Treatment:

1. Form exposed corners of beams, walls, foundations, bases and columns to produce smooth, solid, unbroken lines, except as otherwise shown. Except as specified below for reentrant or internal corners, exposed corners shall be chamfered.
2. Form chamfers with 3/4-inch by 3/4-inch strips, unless otherwise shown, accurately formed and surfaced to produce uniformly straight lines and tight edge joints. Use rigid PVC chamfers for all architecturally formed concrete. Extend terminal edges to required limit and miter chamfer strips at changes in direction.
3. Reentrant or internal corners and unexposed corners may be formed either square or chamfered.

G. Joints: The treatment of joints shall conform to the requirement of Section 03251, Concrete Joints. Locate as shown and specified.

H. Openings and Built-In Work:

1. Provide openings in concrete formwork shown or required by other Sections or other contracts. Refer to paragraph 1.1.B herein for the requirements of coordination.
2. Accurately place and securely support items to be built into forms.
3. Pouring of walls may only be done through pouring openings on one of the wall sides. Pour windows shall be provided at four (4) feet on center for the full height of the wall.
4. CONTRACTOR shall either erect the complete form on one side of the wall then erect the form panels on the other side of the wall while the concrete pour is in progress or remove form panels from either the inside or outside form-assembly before concrete pouring starts.
5. The horizontal centerline distance between such openings shall not exceed 96 inches nor shall the distance between the nearest opening and the bulkhead for the vertical joint exceed 36 inches.
6. The vertical centerline distance between horizontal rows of openings shall not exceed 96 inches.
7. The minimum pouring opening size shall be 24" X 18".
8. The bottom of the lower openings shall be no more than 48 inches from the top of the wall-footing.
9. Under no circumstances shall forming be such that the drop of concrete in the forms will exceed 4 feet in any one place.

I. Cleaning and Tightening: Thoroughly clean forms and adjacent surfaces to receive concrete. Remove chips, wood, sawdust, dirt or other debris just before concrete is to be placed. Retighten forms immediately after concrete placement as required to eliminate mortar leaks.

J. Full Height Pours:

1. The wall form design shall be such that wall sections can be poured full height without creating horizontal cold joints and without causing snapping of form ties which shall be of sufficient strength and number to prevent spreading of the forms during the placement of concrete and which shall permit ready removal of the forms without spalling or damaging the concrete.

3.3 FORM COATINGS

A. Coat form contact surfaces with a non-staining form-coating compound before reinforcement is placed. Do not allow excess form coating material to accumulate in the forms or to come into contact with surfaces which will be bonded to fresh concrete. Apply in compliance with manufacturer's instructions.

B. Coat steel forms with a non-staining, rust-preventative form oil or otherwise protect against rusting. Rust-stained steel formwork is not acceptable.

3.4 INSTALLATION OF EMBEDDED ITEMS

A. General: Set and build into the formwork, anchorage devices and other embedded items, shown, specified or required by other Sections and other contracts. Refer to paragraph 1.1.B herein for the requirements of coordination. Use necessary setting drawings, diagrams, instructions and directions.

B. Edge Forms and Screeds Strips for Slabs: Set edge forms or bulkheads and intermediate screed strips for slabs to obtain required elevations and contours in the finished slab surface. Provide and secure units to support screeds.

3.5 FIELD QUALITY CONTROL

A. Before concrete placement, CONTRACTOR shall check the formwork, including tolerances, lines, ties, tie cones, and form coatings. He shall make corrections and adjustments to ensure proper size and location of concrete members and stability of forming systems.

B. During concrete placement CONTRACTOR shall check formwork and related supports to ensure that forms are not displaced and that completed Work shall be within specified tolerances.

C. If CONTRACTOR finds that forms are unsatisfactory in any way, either before or during placing of concrete, placement of concrete shall be postponed or stopped until the defects have been corrected, and reviewed by CONSTRUCTION MANAGER.

3.6 REMOVAL OF FORMS

A. Conform to the requirements of ACI 301 and ACI 347, except as specified below.

B. Removal of Forms and Supports:

1. Careful procedures for the removal of forms shall be strictly followed, and this work shall be done with care so as to avoid injury to the concrete. No heavy loading on green concrete will be permitted. In the case of roof slabs and above-ground floor slabs, forms shall remain in place until test cylinders for the roof concrete attain a minimum compressive strength of 75 percent of the 28-day strength specified in Section entitle, "Cast-in-Place Concrete"; 03300 provided, that no forms shall be disturbed or removed under an individual panel or unit before the concrete in the adjacent panel or unit has attained 75 percent of the specified 28-day strength. Forms for all parts of the Work not specifically mentioned herein shall remain in place for periods of time as determined by the CONSTRUCTION MANAGER.

C. Do not remove supporting forms or shoring until the members have acquired sufficient strength to safely support their weight and the load upon them. Results of suitable control tests may be used as evidence that the concrete has attained sufficient strength.

D. The time for removal of all forms will be subject to CONSTRUCTION MANAGER'S approval.

3.7 RE-USE OF FORMS

A. Clean and repair surfaces of forms to be re-used in the Work. Split, frayed, delaminated or otherwise damaged form facing material will not be acceptable. Apply new form coating compound material to concrete contact surfaces as specified for new formwork.

B. When forms are extended for successive concrete placement, thoroughly clean surfaces, remove fins and laitance, and tighten forms to close all joints. Align and secure joints to avoid offsets. Do not use "patched" forms for exposed concrete surfaces. Form surfaces shall be subject to CONSTRUCTION MANAGER'S approval.

** END OF SECTION **

This page left intentionally blank.

SECTION 03200

CONCRETE REINFORCEMENT

PART 1 - GENERAL

1.1 WORK OF THIS SECTION

A. Scope:

1. CONTRACTOR shall provide all labor, materials, equipment and incidentals as shown, specified and required to furnish and install concrete reinforcement.
2. The extent of concrete reinforcement is shown on the Contract Drawings.
3. The Work includes fabrication and placement of reinforcement including bars, ties and supports, and welded wire fabric for concrete, encasements and fireproofing.

B. Related Sections Specified Elsewhere:

1. Section 03100, Concrete Formwork.
2. Section 03300, Cast-In-Place Concrete.

1.2 QUALITY ASSURANCE

A. Reference Standards: Comply with applicable provisions and recommendations of the following, except as otherwise shown or specified:

1. ACI 318, Building Code Requirements for Reinforced Concrete.
2. ACI 315, Manual of Standard Practice for Detailing Reinforced Concrete Structures.
3. The Building Code, as referenced herein, shall be the California Building Code of the International Conference of Building Officials (ICBO).
4. CRSI MSP-1, Concrete Reinforcing Steel Institute Manual of Standard Practice.

B. Allowable Placing Tolerances: Comply with ACI 318, Chapter 7 - Details of Reinforcement.

1.3 REFERENCE SPECIFICATIONS, CODES, AND STANDARDS

A. Without limiting the generality of other requirements of these specifications, all work specified herein shall conform to or exceed the requirements of the Building Code and the applicable requirements of the following documents to the extent that the provisions of such documents are not in conflict with the requirements of this Section; provided, that for building codes, the latest edition of the codes, as adopted as of the date of award by the agency having jurisdiction, shall apply to the WORK.

1. Codes and Standards

a. The Building Code, as referenced herein, shall be the California Building Code of the International Conference of Building Officials (ICBO).

b. Minimum Specifications for Welding of Reinforcing Steel. (See Appendix this section).

2. Commercial Standards

a. ANSI/ACI 315-Current Details and Detailing of Concrete Reinforcement.
b. ANSI/ACI 318-Current Building Code Requirements for Reinforced Concrete.
c. WRI Manual of Standard Practice for Welded Wire Fabric.
d. ASTM A 82-Current Specification for Steel Wire, Plain, for Concrete Reinforcement.
e. ASTM A 185-Current Specification for Welded Steel Wire Fabric for Concrete Reinforcement.
f. ASTM A 615-Current Specification for Deformed and Plain Billet-Steel Bars for Concrete Reinforcement.
g. ASTM A706-Current Specification for Low-Alloy Steel Deformed Bars for Concrete Reinforcement

1.4 SUBMITTALS

A. Shop Drawings: Submit for approval the following:

1. Manufacturer's specifications and installation instructions for all materials and reinforcement accessories.
2. Drawings for fabrication, bending, and placement of concrete reinforcement. Comply with ACI 315, Parts A and B. For walls, show elevations to a minimum scale of 1/4-inch to 1 foot. For slabs, show top and bottom reinforcing on separate plan views. Show bar schedules, stirrup spacing, diagrams of bent bars, arrangements and assemblies, as required for the fabrication and placement of concrete reinforcement unless otherwise noted. Splices shall be kept to a minimum. Splices in regions of maximum tension stresses shall be avoided.

a. Drawings detailing the location of all construction and expansion joints shall be submitted and approved before Shop Drawings for reinforcing steel are submitted.

B. Certificates:

1. Submit 1 copy of steel producer's certificates of mill analysis, tensile and bend tests for reinforcing steel per batch.

1.5 DELIVERY, HANDLING AND STORAGE

A. Deliver concrete reinforcement materials to the site bundled, tagged and marked. Use metal tags indicating bar size, lengths, and other information corresponding to markings shown on placement diagrams.

B. Store concrete reinforcement material at the site to prevent damage and accumulation of dirt or excessive rust. Store on heavy wood blocking so that no part of it will come in contact with the ground.

PART 2 - PRODUCTS

2.1 MATERIALS

A. Reinforcing Bars: Provide ASTM A615 Grade 60 for all bars except for welded bars which shall conform to ASTM A706.

B. Steel Wire: ASTM A82.

C. Welded Smooth Wire Fabric: ASTM A185.

1. Furnish in flat sheets, not rolls.

D. Supports for Reinforcement: Bolsters, chairs, spacers and other devices for spacing, supporting and fastening reinforcement in place.

1. Use wire bar type supports complying with CRSI recommendations, except as specified below. Do not use wood, brick, or other unacceptable materials.
2. For slabs on grade, use precast concrete blocks.
3. For all concrete surfaces, where legs of supports are in contact with forms, provide supports complying with CRSI "Manual of Standard Practice", with either hot-dip galvanized, plastic protected or stainless steel legs.

2.2 FABRICATION

A. General: Fabricate reinforcing bars to conform to required shapes and dimensions, with fabrication tolerances complying with CRSI, Manual of Standard Practice. In case of fabricating errors, do not re-bend or straighten reinforcement in a manner that will injure or weaken the material.

B. Unacceptable Materials: Reinforcement with any of the following defects will not be permitted in the Work:

1. Bar lengths, bends, and other dimensions exceeding specified fabrication tolerances.
2. Bends or kinks not shown on approved Shop Drawings.
3. Bars with reduced cross-section due to excessive rusting or other cause.

PART 3 - EXECUTION

3.1 INSPECTION

A. CONTRACTOR and his installer shall examine the substrate and the conditions under which concrete reinforcement is to be placed, and notify CONSTRUCTION MANAGER

in writing of unsatisfactory conditions. Do not proceed with the Work until unsatisfactory conditions have been corrected in a manner acceptable to CONSTRUCTION MANAGER.

3.2 INSTALLATION

A. Placing: Reinforcing steel shall be accurately positioned as shown on the Drawings, and shall be supported and wired together to prevent displacement, using annealed iron wire ties or suitable clips at intersections. All reinforcing steel shall be supported by concrete or metal supports, spacers or metal hangers. Where concrete is to be placed on the ground, supporting concrete blocks (or dobbies) shall be used, in sufficient numbers to support the continuous length of the steel. For concrete over formwork, the CONTRACTOR shall furnish concrete, metal, plastic, or other acceptable bar chairs and spacers.

B. Where the concrete surface will be exposed to the weather in the finished structure or where rust would impair architectural finishes, the portions of all accessories in contact with the formwork shall be galvanized or shall be made of plastic.

C. Tie wires shall be bent away from the forms in order to provide the specified concrete coverage. Bars additional to those shown on the Drawings which may be found necessary or desirable by the CONTRACTOR for the purpose of securing reinforcement in position shall be provided by the CONTRACTOR at its own expense.

D. Placing Tolerances: Unless otherwise specified, reinforcement placing tolerances shall be within the limits specified in Section 7.5 of ANSI/ACE 318 except where in conflict with the requirements of the Building Code.

E. Bars may be moved as necessary to avoid interference with other reinforcing steel, conduits, or embedded items. If bars are moved more than one bar diameter, or enough to exceed the above tolerances, the resulting arrangement of bars shall be acceptable to the CONSTRUCTION MANAGER.

F. Welded wire fabric reinforcement placed over horizontal forms shall be supported on slab bolsters having gray, plastic-coated standard type legs. Slab bolsters shall be spaced not less than 30 inches on centers, shall extend continuously across the entire width of the reinforcing mat, and shall support the reinforcing mat in the plane shown on the Drawings.

G. Bar Tying: Bars shall be tied sufficiently often to prevent shifting. There shall be at least three ties in each bar length (this shall not apply to dowel laps or to bars shorter than 4 feet, unless necessary for rigidity). Slab bars shall be tied at every intersection around the periphery of the slab. Wall bars and slab bar intersections shall be tied at not less than every fourth intersection, but at not greater than the following maximum spacing:

	Slab Bars (inches)	Wall Bars (inches)
Bars No. 5 and smaller	60	48
Bars No. 6 through No. 9	96	60
Bars No. 10 through No. 11	120	96

H. Where concrete surfaces shall be core-drilled to install sockets for handrail, reinforcing steel shall be placed to coordinate with handrail socket locations.

3.3 SPACING OF BARS

A. The clear distance between parallel bars (except in columns and between multiple layers of bars in beams) shall be not less than the nominal diameter of the bars nor less than 1-1/3 times the maximum size of the coarse aggregate, nor less than one inch.

B. Where reinforcement in beams or girders is placed in 2 or more layers, the clear distance between layers shall be not less than one inch.

C. In spirally-reinforced and in tied columns, the clear distance between longitudinal bars shall be not less than 1-1/2 times the bar diameter, nor less than 1-1/2 times the maximum size of the coarse aggregate, nor less than 1-1/2 inches.

3.4 SPLICING

A. General: Reinforcing bar splices shall only be used at locations shown on the Drawings. When it is necessary to splice reinforcement at points other than where shown, the character of the splice shall be acceptable to the CONSTRUCTION MANAGER. Welded splices shall conform to the requirements of Part 4 of this Section.

B. Splices of Reinforcement: The length of lap for reinforcing bars, unless otherwise shown on the Drawings shall be in accordance with ACI 318.

C. When shown on the Drawings, welded splices and mechanical connections shall develop at least 125 percent of the specified yield strength of the bar in tension.

D. Laps of welded wire fabric shall be in accordance with the ACI 318. Adjoining sheets shall be securely tied together with No. 14 tie wire, one tie for each 2 running feet. Wires shall be staggered and tied in such a manner that they cannot slip.

E. Splices in column spiral reinforcement, when necessary, shall be made by welding or by a lap of 1-1/2 turns.

F. Bending or Straightening: Reinforcing shall not be straightened or rebent in a manner, which will injure the material. Bars with kinks or bends not shown on the Drawings shall not be used. All bars shall be bent cold, unless otherwise permitted by the CONSTRUCTION MANAGER. No bars partially embedded in concrete shall be field-

bent except as shown on the Drawings or specifically permitted by the CONSTRUCTION MANAGER.

3.5 CONCRETE COVER

A. On all formed surfaces there shall be a nominal cover over the steel of two (2) inches minimum.

B. Unless otherwise specified in these specifications or shown on the Drawings, all reinforcing steel facing subgrades in footing and floors for concrete construction shall be given a nominal protective cover of three (3) inches.

C. No “bury” or “carrier” bars will be allowed unless specifically approved by the CONSTRUCTION MANAGER.

3.6 CLEANING AND PROTECTION

A. Reinforcing steel shall at all times be protected from moisture until concrete is placed around it.

B. The surfaces of all reinforcing steel and other metalwork to be in contact with concrete shall be thoroughly cleaned of all dirt, grease, loose scale and rust, grout, mortar and other foreign substances immediately before the concrete is placed. Where there is delay in depositing concrete, reinforcing shall be reinspected and, if necessary recleaned.

3.7 INSPECTION OF REINFORCEMENT

Concrete shall not be placed until the reinforcing steel is inspected and permission for placing concrete is granted by the CONSTRUCTION MANAGER. All concrete placed in violation of this provision will be rejected.

3.8 MECHANICAL COUPLERS

A. Mechanical couplers shall be provided where shown and where approved by the CONSTRUCTION MANAGER. The couplers shall develop a tensile strength, which exceeds 125 percent of the yield strength of the reinforcement bars being spliced at each splice.

B. Where the type of coupler used is composed of more than one component, all components required for a complete splice shall be supplied. This shall apply to all mechanical splices, including those splices intended for future connections.

C. The reinforcement steel and coupler used shall be compatible for obtaining the required strength of the connection. Straight threaded type couplers shall require the use of the next larger size reinforcing bar or shall be used with reinforcing bars with specially forged ends which provide upset threads which do not decrease the basic cross section of the bar.

PART 4 - APPENDIX TO SECTION 03200

These specifications shall apply to the welding of reinforcing steel for splices, steel connection devices, inserts, anchors and anchorage details, as well as any other welding of reinforcing steel both in the fabricating shop and in the field. When welding reinforcing steel to primary structural members, the provisions of AWS D1.1 shall also be fully satisfied. Reinforcing steel may be subject to cracking the embrittlement when welded, and special procedures are needed to minimize this problem. These are minimum specifications and shall not supersede any more restrictive specifications shown on the approved plans.

4.1 STANDARDS FOR WELDING

A. The details, procedures, workmanship and technique of reinforcing steel welding shall be in accordance with the requirements of the Reinforcing Steel Welding Code, AWS D1.4-98 as published by the American Welding Society.

B. All welding shall be performed in accordance with the requirements of an approved procedure specification.

4.2 APPROVED PROCEDURES

A. Each joint welding procedure for reinforcing bar splices, bar connections, and insert connections that are to be employed shall be established in a procedure specification and shall be qualified prior to use by tests as prescribed in AWS D1.4-98.

B. Procedure qualification tests shall be witnessed by a registered special inspector in structural steel assembly and tested by an approved testing agency. The results of successful procedure qualification tests and the approved procedure specifications shall be submitted to the CONSTRUCTION MANAGER.

C. The approved procedure specifications shall be made available at the site where welding is performed.

4.3 WELDER QUALIFICATION

A. All welders to be employed in welding reinforcing bars shall have been qualified by tests as prescribed in AWS D1.4-98, unless evidence of previous qualification is accepted by the CONSTRUCTION MANAGER and the Registered Special Inspector.

B. Welder qualification tests shall be witnessed by a Registered Special Inspector in structural steel assembly.

C. Upon request of the Registered Special Inspector or the CONSTRUCTION MANAGER, welders shall provide evidence of qualification for each process, position and type of weld to be performed.

4.4 SPECIAL INSPECTION (PERFORMED BY THE OWNER)

A. Special inspection for reinforcing steel welding shall be provided by a special inspector certified to inspect structural steel assembly.

B. The special inspector shall provide continuous inspection for all reinforcing steel welding.

C. Special inspection is required for reinforcing steel welding performed on the site (field) and off site (shop).

4.5 GENERAL

A. Arc strikes on reinforcing steel outside the area of permanent welds shall be avoided.

B. Tack welds shall be made using preheat and quality requirements applicable to permanent welds. Tack welds that do not become a part of permanent welds are prohibited. Under no circumstances should stressed bars be tack welded along their length.

** END OF SECTION **

SECTION 03251

CONCRETE JOINTS

PART 1 - GENERAL

1.1 WORK OF THIS SECTION

A. Scope

1. CONTRACTOR shall provide all labor, materials, equipment and incidentals as shown, specified and required to furnish and install concrete joints.
2. The types of concrete joints required include the following:

    a. Construction joints.
    b. Waterstops.

B. General: All joints subject to hydrostatic pressure shall be provided with continuous waterstop.

C. Related Sections:

1. Section 03100, Concrete Form Work.
2. Section 03300, Cast-In-Place Concrete.

1.2 QUALITY ASSURANCE

A. Reference Standards: Comply with applicable provisions and recommendations of the following, except as otherwise shown or specified:

1. ACI 301, Specifications for Structural Concrete.
2. ACI 318, Building Code Requirements for Structural Concrete
3. ACI 350, Code Requirements for Environmental Engineering Concrete Structure
4. ASTM A 36, Structural Steel.
5. ASTM D 1752, Preformed Expansion Joint Fillers for Concrete Paving and Structural Construction.
6. CRD-C572, Corps of Engineers Specifications for Polyvinyl- Chloride Waterstop.
7. ASTM Cellular Elastomeric Preformed Gasket and Sealing Materials.

B. Waterstop Inspection: It is required that all waterstop field joints shall be subject to rigid inspection, and no such work shall be scheduled or started without having made prior arrangements with the CONSTRUCTION MANAGER to provide for the required inspections. Not less than 24 hours' notice shall be provided to the CONSTRUCTION MANAGER for scheduling such inspections.

C. All field joints in waterstops will be subject to rigid inspection for misalignment, bubbles, inadequate bond, porosity, cracks, offsets, and other defects which would reduce the

potential resistance of the material to water pressure at any point. All defective joints shall be replaced with material which will pass said inspection, and all faulty material shall be removed from the site and disposed of by the CONTRACTOR at its own expense.

D. The following defects represent a partial list of defects, which shall be grounds for rejection:

1. Offsets at joints greater than 1/32 inch or 15 percent of material thickness, at any point, whichever is less.
2. Exterior crack at joint, due to incomplete bond, which is deeper than 1/32 inch at any point.
3. Any combination of offset or exterior crack which will result in a net reduction in the cross section of the waterstop in excess of 1/32 inch or 15 percent of material thickness at any point, whichever is less.
4. Misalignment of joint, which result in misalignment of the waterstop in excess of ½ inch in 10 feet.
5. Porosity in the welded joint as evidenced by visual inspection.
6. Bubbles or inadequate bonding, which can be detected with a penknife test. (If, while prodding the entire joint with the point of a penknife, the knife breaks through the outer portion of the weld into a bubble, the joint shall be considered defective).

E. Waterstop Samples: Prior to use of the waterstop material in the field, a sample of a fabricated mitered cross and a tee constructed of each size or shape of material to be used shall be submitted to the CONSTRUCTION MANAGER for review. These samples shall be fabricated so that the material and workmanship represent in all respects the fittings to be furnished under this contract. Field samples of fabricated fittings (crosses, tees, etc.) will be selected at random by the CONSTRUCTION MANAGER for testing by a laboratory at the OWNER's expense. When tested, they shall have a tensile strength across the joints equal to at least 600 psi.

F. Construction Joint Sealant: The CONTRACTOR shall prepare adhesion and cohesion test specimens as specified herein, at intervals of 5 working days while sealants are being installed.

G. The sealant material shall show no signs of adhesive or cohesive failure when testing in accordance with the following procedure in laboratory and field tests:

1. Sealant specimen shall be prepared between 2 concrete blocks (1-inch by 2-inch by 3-inch). Spacing between the blocks shall be ½-inch. Coated spacers (2-inch by 1 ½-inch by ½-inch) shall be used to insure sealant cross-sections of ½-inch by 2-inches with a width of ½-inch.
2. Sealant shall be cast and cured according to manufacturer's recommendations except that curing period shall not exceed 24 hour.
3. Following curing period, the gap between blocks shall be widened to 1 inch. Spacers shall be used to maintain this gap for 24 hours prior to inspection for failure.

H. All manufactured items shall be installed in accordance with manufacturer's instructions.

1.3 SUBMITTALS

A. Samples: Submit for approval the following:

1. Polyvinyl chloride waterstops for joints, including a fabricated mitered cross and a tee constructed of each size or shape of material to be used.
2. Preformed plastic adhesive waterstop.
3. Construction joint sealant.
4. Field samples of fabricated fittings (crosses, tees, etc.) selected at random by the CONSTRUCTION MANAGER for testing by a laboratory at the OWNER's expense (Minimum tensile strength across the joint equal to at least 600 psi).

B. Shop Drawings: Submit for approval the following:

1. Manufacturer's specifications and installation instructions for all materials required.
2. Layout of all construction joint locations prior to the submittal of steel reinforcing drawings.

C. Certifications: Submit the following:

1. Certified test reports from the sealant manufacturer on the actual batch of material being supplied indicating compliance with the above requirements shall be furnished the CONSTRUCTION MANAGER before the sealant is used on the job.
2. Shipping Certification: The CONTRACTOR shall provide written certification from the manufacturer as an integral part of the shipping form, to show that all of the material shipped to this project meets or exceeds the physical property requirements of the Contract Documents. Supplier certificates are not acceptable.

1.4 TYPES OF JOINTS

A. Construction Joints: When fresh concrete is placed against a hardened concrete surface, the joint between the two pours is called a construction joint. When required on the Drawings, such a joint will be provided with a waterstop and/or sealant groove of the shape specified and detailed on the Drawings. The surface of the first pour may also be required to receive a coating of bond breaker as called for on the detail Drawings.

B. Weakened Plane Joints: The function of the weakened plane joint is to provide a weaker plane in the concrete, where shrinkage cracks will probably occur. A groove, of the shape and dimensions shown on the Drawing, is formed or saw-cut in the concrete. This groove is afterward filled with a joint sealant material as specified in Subsection 2.6 "Joint Sealant."

1.5 GUARANTEE

The CONTRACTOR shall provide a 5-year written guarantee of the entire sealant installation against faulty and/or incompatible materials and workmanship, together with

a statement that it agrees to repair or replace, to the satisfaction of the OWNER, at no additional cost to the OWNER, any such defective areas which become evident within said 5-year guarantee period.

PART 2 - PRODUCTS

2.1 GENERAL

All joint materials specified herein shall be classified as acceptable for potable water use by the Environmental Protection Agency, within 30 days of application.

2.2 WATERSTOPS

A. General: Waterstops shall be extruded from an elastomeric polyvinylchloride compound containing the plasticizers, resins, stabilizers, and other materials necessary to meet the requirements of these Specifications. No reclaimed or scrap material shall be used. The CONTRACTOR shall obtain from the waterstop manufacturer and shall furnish to the CONSTRUCTION MANAGER for review, current test reports and a written certification of the manufacturer that the material to be shipped to the job meets the physical requirements as outlined in the U.S. Army Corps of Engineers Specification CRD-C572 and listed in Paragraph E, below.

B. Flatstrip Waterstops: Flatstrip waterstops shall be as detailed and as manufactured by: Kirkhill Rubber Co., Brea, California; Water Seals, Inc., Chicago, Illinois; Progress Unlimited, Inc., New York, New York; Vinylex Corporation; Greenstreak, or equal; provided, that at no place shall the thickness of flatstrip waterstops be less than 3/16 inch.

C. Preformed Plastic Adhesive Waterstop: Preformed plastic adhesive waterstops shall be used where indicated. Waterstop shall be as detailed and manufactured by SYNKO-FLEX or SIKA.

D. Waterstop Testing Requirements: When tested in accordance with the specified test standards, the waterstop material shall meet or exceed the following requirements:

Physical Property, Sheet Material	Value	ASTM Std.
Tensile Strength-min (psi)	2000	D 638-82a, Type IV
Ultimate Elongation-min (percent)	350	D638-82a, Type IV
Low Temp. Brittleness-Max (degrees F)	-35	D 746-79
Stiffness in Flexure-min (psi)	400	D 747-70 (1981)
Accelerated Extraction (CRD-C572)		
Tensile Strength-min (psi)	1500	D 638-82a, Type IV
Ultimate Elongation-min (percent)	300	D 638-82a, Type IV

Effect of Alkalies (CRD-C572)

Change in Weight (percent)	+0.25/-0.10	-----

Finish Waterstops

Tensile Strength (psi)	2,000	(ASTM D-412)
Ultimate elongation (percent)	350	(ASTM D-412)
Shore hardness	75 ∀ 5	(ASTM D-2240)
Specific gravity	1.3	(ASTM D-792)
Stiffness in flexure (psi)	1300	(ASTM D-747)
Cold brittleness (F)	-35°	(ASTM D-746)
Water absorption: 48 hours	.32% max.	(ASTM D-570)
Tear resistance (lb/in)	290	(ASTM D-624)

2.3 NOT USED

2.4 CONCRETE CONSTRUCTION JOINT ROUGHENER

A. Provide a water-soluble non-flammable, surface-retardant roughener.

B. Product and Manufacturer: Provide one of the following:

1. Rugasol-S by Sika Corporation for horizontal joints only.
2. EAC-S by Preco Industries, Ltd. for horizontal joints only.
3. Tuf-Cote (Deep Etch) by Preco Industries Ltd. for vertical joints.
4. Or equal.

2.5 EPOXY BONDING AGENT

A. Where indicated, provide an epoxy-resin bonding agent, two-component type.

B. Product and Manufacturer: Provide one of the following:

1. Sikadur 32 Hi-Mod LPL by Sika Corporation.
2. Eucopoxy LPL by the Euclid Chemical Company.
3. Or equal.

2.6 JOINT SEALANT

A. Joint sealant shall be polyurethane polymer designed for bonding to concrete which is continuously submerged in potable water. No material will be acceptable which has an unsatisfactory history as to bond or durability when used in the joints of water retaining structures.

B. Joint sealant material shall meet the following requirements:

Work Life @ 75°	4 hours
Cure Time @ 40° w/ primer	5 days maximum
Ultimate Hardness	30 - 40 Shore "A"
Tensile Strength	150 psi, minimum
Ultimate Elongation	500 percent, minimum
Tear Resistance (Die C ASTM D 624)	75 pounds per inch of thickness, minimum
Color	Light Gray

C. All polyurethane sealants for waterstop joints in concrete shall conform to the following requirements:

1. Sealant shall be 2-part polyurethane with the physical properties of the cured sealant conforming to or exceeding the requirements of ANSI/ASTM C 920 or Federal Specification TT-S-00227 E(3) for 2-part material, as applicable.
2. For sloping joints, vertical joints and overhead horizontal joints, only “non-sag” compounds shall be used; all such compounds shall conform to the requirements of ANSI/ASTM C 920 Class 12-1/2, or Federal Specification TT-S-0027 E(3), Type II.
3. For plane horizontal joints, the self-leveling compounds which meet the requirements of ANSI/ASTM C 920 Class 25, or Federal Specification TT-S-0027 E(3), Type I shall be used. For joints subject to either pedestrian or vehicular traffic, a compound providing non-tracking characteristics, and having a Shore “A” hardness range of 25 to 35, shall be used.
4. Primer materials, if recommended by the sealant manufacturer, shall conform to the printed recommendations of the sealant manufacturer.

D. All sealants, wherever shown on the Drawings or required hereunder shall be Rubbercalk 2101 or 220 as manufactured by Products Research Company; GS 102 or GS 1102 as manufactured by Federal Sealants Corp.; Pacific Polymers Elasto-Thane Type 227R, or equal.

2.7 BACKING ROD

Backing rod, where indicated, shall be an extruded closed-cell, polyethylene foam rod. The material shall be compatible with the joint sealant material used and shall have a tensile strength of not less than 40 psi and a compression deflection of approximately 25 percent at 8 psi. The rod shall be 1/8-inch larger in diameter than the joint width except that a one-inch diameter rod shall be used for a 3/4-inch wide joint.

2.8 BOND BREAKER

Bond breaker shall be Super Bond Breaker as manufactured by Burke Company, San Mateo, California; Hunt Process 225-TU as manufactured by Hunt Process Company, Santa Fe Springs, California; Select Cure CRB as manufactured by Select Products Co., Upland, California; or equal. It shall contain a fugitive dye so that areas of application will be readily distinguishable.

PART 3 - EXECUTION

3.1 GENERAL

A. Unless otherwise shown on the Drawings, waterstops of the type specified herein shall be embedded in the concrete across joints as shown. All waterstops shall be fully continuous for the extent of the joint. Splices necessary to provide such continuity shall be accomplished in conformance to printed instructions of manufacturer of the waterstops. The CONTRACTOR shall take suitable precautions and means to support and protect the waterstops during the progress of the WORK and shall repair or replace at its own expense any waterstops damaged during the progress of the WORK. All waterstops shall be stored so as to permit free circulation of air around the waterstop material.

B. When any waterstop is installed in the concrete on 1 side of a joint, while the other half or portion of the waterstop remains exposed to the atmosphere for more than 2 days, suitable precautions shall be taken to shade and protect the exposed waterstop from direct rays of the sun during the entire exposure and until the exposed portion of the waterstop is embedded in concrete.

3.2 SPLICES IN WATERSTOPS

A. Splices in waterstops shall be performed by heat-sealing the adjacent waterstop sections in accordance with the manufacturer’s printed recommendations. It is essential that:

1. The material not be damaged by heat sealing.
2. The splices have a tensile strength of not less than 60 percent of the unspliced material’s tensile strength.
3. The continuity of the waterstop ribs and of its tubular center axis be maintained.

B. Butt joints of the ends of 2 identical waterstop sections may be made while the material is in the forms.

C. All joints in waterstop involving more than 2 ends to be jointed together, and all joints which involve an angle cut, alignment change, or the joining of 2 dissimilar waterstop sections shall be prefabricated by the CONTRACTOR prior to placement in the forms, allowing not less than 24-inch long strips of waterstop material beyond the joint. Upon being inspected and approved, such prefabricated waterstop joint assemblies shall be

installed in the forms and the ends of the 24-inch strips shall be butt welded to the straight run portions of waterstop in place in the forms.

3.3 JOINT CONSTRUCTION

A. Setting Waterstops: In order to eliminate faulty installation that may result in joint leakage, particular care shall be taken of the correct positioning of the waterstops during installation. Adequate provisions must be made to support the waterstops during the progress of the WORK and to insure the proper imbedment in the concrete. The symmetrical halves of the waterstops shall be equally divided between the concrete pours at the joints. The center axis of the waterstops shall be coincident with the joint openings. Maximum density and imperviousness of the concrete shall be insured by thoroughly working it in the vicinity of all joints.

B. In placing flat-strip waterstops in the forms, means shall be provided to prevent them from being folded over by the concrete as it is placed. Horizontal waterstops shall be held in place with continuous supports to which the top edge of the waterstop shall be tacked. Unless otherwise shown, vertical waterstops shall be held in place with light wire ties on 12-inch centers, which shall be passed through the edge of the waterstop and tied to the curtain of reinforcing steel. In placing concrete around waterstops, concrete shall be worked under the waterstops by hand so as to avoid the formation of air and rock pockets.

C. Joint Preparation: Construction joints shall be provided where shown on the Drawings. Special care shall be used in preparing concrete surfaces at joints where bonding between 2 sections of concrete is required. Unless otherwise shown on the Drawings, such bonding will be required at all horizontal joints in walls. Surfaces shall be prepared in accordance with the requirements of Section 03300 “Cast-in-Place Concrete.” Except on horizontal wall construction joints, wall to slab joints or where otherwise shown or specified, at all joints where waterstops are required, the joint face of the first pour shall be coated with a bond breaker as specified herein.

D. Adequate means shall be provided for anchoring the waterstop in concrete. Waterstops shall be positioned so that they are equally embedded in the concrete on each side of the joint.

E. Sealant application shall be in accordance with the manufacturer’s printed instructions. The surfaces of the groove for the sealant shall not be coated. Concrete next to waterstops shall be placed in accordance with the requirements of Section 03300 “Cast-in-Place Concrete.”

F. Construction Joint Sealant: Where shown, construction joints in floor slabs shall be provided with tapered grooves, which shall be filled with a construction joint sealant. The material used for forming the tapered grooves shall be left in the grooves until just before the grooves are cleaned and filled with joint sealant. After removing the forms from the grooves, all laitance and fins shall be removed, and the grooves shall be sandblasted. The grooves shall be allowed to become thoroughly dry, after which they

shall be blown out; immediately thereafter, they shall be primed and filled with the construction joint sealant. The primer used shall be supplied by the same manufacturer supplying the sealant. No sealant will be permitted to be used without a primer. Care shall be used to completely fill the sealant grooves. Areas designated to receive a sealant filler shall be thoroughly cleaned, as outlined for the tapered grooves, prior to application of the sealant.

G. The primer and sealant shall be placed strictly in accordance with the printed recommendations of the manufacturer, taking special care to properly mix the sealant prior to application. All sealant shall cure at least 7 days before the structure is filled with water.

H. All sealant shall be installed by a competent waterproofing specialty contractor who has a successful record of performance in similar installations. Before work is commenced, the crew doing the WORK shall be instructed as to the proper method of application by a representative of the sealant manufacturer.

I. Thorough, uniform mixing of 2-part, catalyst-cured materials is essential; special care shall be taken to properly mix the sealer before its application. Before any sealer is placed, the CONTRACTOR shall arrange to have the crew doing the WORK carefully instructed as to the proper method of mixing and application by a representative of the sealant manufacturer.

J. Any joint sealant which, after the manufacturer's recommended curing time for the job conditions of the WORK hereunder, fails to fully and properly cure shall be completely removed; the groove shall be thoroughly sandblasted to remove all traces of the uncured or partially cured sealant and primer, and shall be re-sealed with the specified joint sealant. All costs of such removal, joint treatment, re-sealing, and appurtenant work shall be at the expense of the CONTRACTOR.

** END OF SECTION **

This page left intentionally blank.

SECTION 03300

CAST-IN-PLACE CONCRETE

PART 1 - GENERAL

1.1 WORK OF THIS SECTION

A. Scope:

1. CONTRACTOR shall provide all labor, materials, equipment and incidentals as shown, specified and required to furnish and install cast-in-place concrete.
2. The Work includes providing concrete consisting of Portland cement, fine and coarse aggregate, water, and approved admixtures; combined, mixed, transported, placed, finished and cured. The Work also includes:

    a. Providing openings in concrete to accommodate the Work under this and other Sections and building into the concrete all items such as sleeves, frames, anchor bolts, inserts and all other items to be embedded.

B. Coordination:

1. Review installation procedures under other Sections and coordinate the installation of items that must be installed in the concrete.

C. Related Sections:

1. Section 03100, Concrete Formwork.
2. Section 03200, Concrete Reinforcement.
3. Section 03251, Concrete Joints.

1.2 QUALITY ASSURANCE

A. Reference Standards: Comply with the applicable provisions and recommendations of the following, except as otherwise shown or specified.

1. ACI 211.1, Recommended Practice for Selecting Proportions for Normal and Heavyweight Concrete.
2. ACI 214, Recommended Practice for Evaluation of Compression Test Results of Field Concrete.
3. ACI 301, Specifications for Structural Concrete.
4. ACI 304, Recommended Practice for Measuring, Mixing, Transporting and Placing Concrete.
5. ACI 305, Recommended Practice for Hot Weather Concreting.
6. ACI 306, Recommended Practice for Cold Weather Concreting.
7. ACI 309, Recommended Practice for Consolidation of Concrete.
8. ACI 311, Recommended Practice for Concrete Inspection.

9. ACI 318, Building Code Requirements for Reinforced Concrete.
10. ACI 350R, Environmental Engineering Concrete Structures.
11. AASHTO M 182, Burlap Cloth Made From Jute or Kenaf.
12. The California Building Code (CBC) of the International Conference of Building Officials (ICBO), latest edition.
13. ACI 315, Details and Detailing of Concrete Reinforcement.
14. ACI 347, Recommended Practice for Concrete Formwork.
15. ACI 117, Standard Tolerances for Concrete Construction and Materials.

B. Concrete Testing Service

1. CONTRACTOR shall employ, at his own expense, a testing laboratory experienced in design and testing of concrete materials and mixes to perform material evaluation tests and to design concrete mixes.

    a. Testing agency shall meet the requirements of ASTM E 329.
    b. Selection of a testing laboratory is subject to CONSTRUCTION MANAGER'S approval.
    c. Submit a written description of the proposed concrete testing laboratory giving qualifications of personnel, laboratory facilities and equipment, and other information that may be requested by CONSTRUCTION MANAGER.

2. Materials and installed Work may require testing and retesting, as directed by CONSTRUCTION MANAGER, at any time during the progress of the Work. Allow free access to material stockpiles and facilities at all times. Tests not specifically indicated to be done at OWNER'S expense, including the retesting of rejected materials and installed Work, shall be done at CONTRACTOR'S expense.

C. Qualifications of Water-Reducing Admixture Manufacturer:

1. Water-reducing admixtures shall be manufactured under strict quality control in facilities operated under a quality assurance program. CONTRACTOR shall furnish copy of manufacturer's quality assurance handbook to document the existence of the program. Manufacturer shall maintain a concrete testing laboratory which has been approved by the Cement and Concrete Reference Laboratory at the Bureau of Standards, Washington, D.C.
2. When requested by CONSTRUCTION MANAGER, provide a qualified concrete technician employed by the admixture manufacturer to assist in proportioning the concrete for optimum use of the admixture. The concrete technician, when requested, shall advise on proper addition of the admixture to the concrete and on adjustment of the concrete mix proportions to meet changing jobsite conditions.

D. Tests for Concrete Materials:

1. Submit written reports to CONSTRUCTION MANAGER, for each material sampled and tested, prior to the start of Work. Provide the Project identification name and number, date of report, name of CONTRACTOR, name of concrete testing service, source of concrete aggregates, material manufacturer and brand

name for manufactured materials, values specified in the referenced specification for each material, and test results. Indicate whether or not material is acceptable for intended use.

1.3 SUBMITTALS

A. Samples: Submit samples of materials as specified and as otherwise may be requested by CONSTRUCTION MANAGER, including names, sources and descriptions.

B. Shop Drawings: Submit for approval the following:

1. Manufacturer's specifications with application and installation instructions for proprietary materials and items, including admixtures and bonding agents.
2. List of concrete materials and concrete mix designs proposed for use. Include the results of all tests performed to qualify the materials and to establish the mix designs.
3. The following information, if ready-mixed concrete is used.

    a. Physical capacity of mixing plant.
    b. Trucking facilities available.
    c. Estimated average amount, which can be produced and delivered to the site during a normal 8-hour day, excluding the output to other customers.

C. Laboratory Test Reports: Submit copies of laboratory test reports for concrete cylinders, materials and mix design tests. CONSTRUCTION MANAGER'S review will be for general information only. Production of concrete to comply with specified requirements is the responsibility of CONTRACTOR.

D. Submit notarized certification of conformance to referenced standards when requested by CONSTRUCTION MANAGER.

E. Delivery Tickets: Furnish to CONSTRUCTION MANAGER copies of all delivery tickets for each load of concrete delivered to the site. Provide items of information as specified in ASTM C 94.

1.4 PRODUCT DELIVERY, STORAGE AND HANDLING

A. All materials used for concrete must be kept clean and free from all foreign matter during transportation and handling and kept separate until measured and placed in the mixer. Bins or platforms having hard clean surfaces shall be provided for storage. Suitable means shall be taken during hauling, piling and handling to insure that segregation of the coarse and fine aggregate particles does not occur and the grading is not affected.

PART 2 - PRODUCTS

2.1 CONCRETE MATERIALS

A. Cement:

1. Portland cement, ASTM C 150, Type V, blended with ASTM C618 pozzolan or fly ash.
2. The pozzolan or fly ash content shall not exceed 25 percent by weight of the total cementitious material.
3. Use Portland cement made by a well-known acceptable manufacturer and produced by not more than one plant. A single brand of cement shall be used throughout the Work.
4. Do not use cement which has deteriorated because of improper storage or handling.

B. Aggregates: ASTM C 33 and as herein specified.

1. Do not use aggregates containing soluble salts or other substances such as iron sulfides, pyrite, or other materials that can cause stains on exposed concrete surfaces.
2. Fine Aggregate: Clean, sharp, natural sand free from loam, clay, lumps or other deleterious substances.

    a. Dune sand, bank run sand and manufactured sand are not acceptable.

3. Coarse Aggregate: Clean, uncoated, processed aggregate containing no clay, mud, loam, or foreign matter, as follows:

    a. Crushed stone, processed from natural rock or stone.
    b. Washed gravel, either natural or crushed. Use of slag and pit or bank run gravel is not permitted.

C. Water: Clean, free from injurious amounts of oils, acids, alkalis, organic materials or other substances that may be deleterious to concrete or steel.

2.2 CONCRETE ADMIXTURES

A. Provide admixtures produced by established reputable manufacturers, and use in compliance with the manufacturer's printed instruction. Do not use admixtures, which have not been incorporated and tested in the accepted mixes, unless otherwise authorized in writing by CONSTRUCTION MANAGER.

B. Air-Entraining Admixtures: ASTM C 260.

1. Product and Manufacturer: Provide one of the following:

    a. SIKA AER, as manufactured by Sika Chemical Corporation.
    b. MB-VR, as manufactured by Master Builders Company.

c. Daravair, as manufactured by W.R. Grace & Company.
d. Or equal.

2. Sufficient air-entraining agent shall be used to provide a total air content of 3 to 5 percent; provided that, when the main daily temperature in the vicinity of the worksite falls below 40 degrees F for more than one day, the total air content provided shall be 5 to 7 percent. The air-entraining agent shall be added to the batch in a portion of the mixing water. The solution shall be batched by means of a mechanical batcher capable of accurate measurement. Air content shall be tested at the point of placement.

C. Water-Reducing Admixture: ASTM C 494, Type A.

1. Proportion all concrete with non-air entraining, normal setting, water-reducing, aqueous solution of a modification of the salt of polyhydroxylated organic acids. The admixture shall not contain any lignin, nitrates or chlorides added during manufacture. The required quantity of cement shall be used in the mix regardless of an admixture.
2. Product and Manufacturer: Provide one of the following:

a. Eucon WR-75, as manufactured by The Euclid Chemical Company.
b. Pozzolith 322N, as manufactured by Master Builders Company.
c. WRDA, as manufactured by W.R. Grace & Company.
d. PRO-KRETE-R, as manufactured by Protex Industries.
e. Plastiment, as manufactured by Sika Chemical Corporation.
f. Or equal.

D. Calcium Chloride: Do not use calcium chloride in concrete. Do not use admixtures containing calcium chloride.

E. Fly ash or pozzalan shall conform to ASTM C618, Class F.

2.3 PROPORTIONING AND DESIGN OF MIXES

A. Proportioning:

1. Concrete shall be composed of cement, admixtures, aggregates, and water. These materials shall be on the qualities specified. The exact proportions in which these materials are to be used for different parts of the Work shall be determined by the CONTRACTOR and submitted to the CONSTRUCTION MANAGER for review prior to use in the Work. In general, the mix shall be designed to produce a concrete capable of being deposited so as to obtain maximum density and minimum shrinkage and, where deposited in forms, to have maximum smoothness of surface. Mix designs with more than 41 percent of sand of the total weight of fine and coarse aggregate shall not be permitted. The proportions shall be changed whenever necessary or desirable to meet the required results at no additional cost to the OWNER. All changes shall be reviewed by the CONSTRUCTION MANAGER.

2. The minimum compressive strength and cement content of concrete shall be not less than that shown in the following tabulation. The CONSTRUCTION MANAGER may order the cement content for any class of concrete to be increased over the quantity specified in the tabulation if he or she determines that such increase is necessary to attain the required strength. Such increased quantities of cement, if so ordered, shall be furnished by the CONTRACTOR at no additional cost to the OWNER.

Concrete Min. 28-day Compressive Strength (psi)	Max. Size Aggregate (in.)	Min. Cement per cu yd (lbs)	Max. W/C Ratio (by weight)
4,500	1	658	0.45

B. Use an independent testing facility acceptable to CONSTRUCTION MANAGER for preparing and reporting proposed mix designs.

1. The testing facility shall not be the same as used for field quality control testing.

C. Proportion mixes by either laboratory trial batch or field experience methods, using materials to be employed on the Project for concrete required. Comply with ACI 211.1 and report to CONSTRUCTION MANAGER the following data:

1. Complete identification of aggregate source of supply.
2. Tests of aggregates for compliance with specified requirements.
3. Scale weight of each aggregate.
4. Absorbed water in each aggregate.
5. Brand, type and composition of cement.
6. Brand, type and amount of each admixture.
7. Amounts of water used in trial mixes.
8. Proportions of each material per cubic yard.
9. Gross weight and yield per cubic yard of trial mixtures.
10. Measured slump.
11. Measured air content.
12. Compressive strength developed at 7 days and 28 days, from not less than 3 test cylinders cast for each 7-day and 28-day test, and for each design mix.

D. Submit written reports to CONSTRUCTION MANAGER of proposed mix of concrete at least 15 days prior to start of Work. Do not begin concrete production until mixes have been approved by CONSTRUCTION MANAGER.

E. Laboratory Trial Batches: When laboratory trial batches are used to select concrete proportions, prepare test specimens and conduct strength tests as specified in ACI 301. However, 4,500 psi concrete mixes need not be designed for greater than 5,000 psi regardless of the production facilities standard deviation.

1. The trial batch shall be prepared using the aggregates, cement and admixture proposed for the project. The trial batch shall be of a quantity such that the testing

laboratory can obtain 3 drying shrinkage and 6 compression test specimens from each batch.

2. Three compression test cylinders shall be tested at 7 days and 3 at 28 days. The average compressive strength for the 3 cylinders prepared for any given trial batch shall be not less than 125 percent of the specified compressive strength.

F. Shrinkage Tests:

1. Drying shrinkage tests will be made for the trial batch and during construction to ensure continued compliance with these Specifications. One set of 3 specimens shall be taken from the first pour of each class of concrete having a 28-day strength of 4,500 psi or higher, and additional set of 3 specimens of each type shall be taken during construction, as required by the CONSTRUCTION MANAGER.
2. The maximum concrete shrinkage for specimens cast in the laboratory from the trial batch, as measured at 21-day drying age or at 28-day drying age shall be 0.036 percent or 0.042 percent, respectively. The CONTRACTOR shall only use a mix design for construction that has first met the trial batch shrinkage requirements.
3. If the required shrinkage limitation is not met during construction, the CONTRACTOR shall be required to take any or all of the following actions, at no additional cost to the OWNER, for securing the specified shrinkage requirements. These actions may include changing the source of aggregates, cement and/or admixtures; reducing water content; washing of aggregate to reduce fines; increasing the number of construction joints; modifying the curing requirements; or other actions designed to minimize shrinkage or the effects of shrinkage.

G. Adjustment to Concrete Mixes: Mix design adjustments may be requested by CONTRACTOR when characteristics of materials, job conditions, weather, test results, or other circumstances warrant; at no additional cost to the OWNER and as accepted by CONSTRUCTION MANAGER. Laboratory test data for revised mix designs and strength results must be submitted to and accepted by CONSTRUCTION MANAGER before using the revised mixes.

H. Admixtures:

1. Use air-entraining admixture in all concrete, except interior slabs subject to abrasion, unless otherwise shown or specified. Add air-entraining admixture at the manufacturer's prescribed rate to result in concrete at the point of placement having air content within the prescribed limits.
2. Use amounts of admixtures as recommended by the manufacturer for climatic conditions prevailing at the time of placing. Adjust quantities and types of admixtures as required to maintain quality control.

I. Slump Limits:

1. Use of a high-range water reducer is permitted and is required for walls and columns. Slump limits for concrete with high-range water reducer are 8 inches

maximum and 5 inches minimum. The product shall be manufactured by one of the following:

a. Daracem 100 or WRDA 19 by W.R. Grace.
b. Sikament FF or Sikament 86 by Sika Corporation.
c. Rheobuild 1000 or Rheobuild 716 by Master Builders.
d. Or equal.

2.4 EPOXY BONDING AGENT

A. Where indicated, provide an epoxy-resin bonding agent, two component, polysulfide type, for bonding freshly-mixed plastic concrete to hardened concrete.

B. Product and Manufacturer: Provide one of the following:

1. Sikadur 32, Hi-Mod LPL, as manufactured by Sika Chemical Corporation.
2. Eucopoxy LPL, as manufactured by the Euclid Chemical Company.
3. Epoxtite Binder (Code #2390) by A.C. Horn, Incorporated.
4. Or equal.

2.5 CONCRETE CURING MATERIALS

A. Absorptive Cover: Burlap cloth made from jute or kenaf, weighing approximately 10 ounces per square yard and complying with AASHTO M182, Class 3.

B. Moisture-Retaining Cover: One of the following, complying with ASTM C 171.

1. Waterproof paper.
2. Polyethylene film.
3. White burlap-polyethylene sheet.

C. Curing Compound: ASTM C 309 Type 1-D (water retention requirements):

1. Product and Manufacturer: Provide one of the following:

a. Super Aqua Cure VOX, as manufactured by The Euclid Chemical Company.
b. Sealtight 1100, as manufactured by W.R. Meadows, Incorporated.
c. Mastercure, as manufactured by Master Builders.
d. Hunt Process clear ARB as manufactured by Hunt Process Co.
e. Select Cure CRB as manufactured by Select Products Co.
f. Or equal.

2. The product shall meet volatile organic compound restrictions of C.A.R.B.
3. Provide fugitive dye.

2.6 EMBEDDED ITEMS

A. Items such as plates, angles, inserts, bolts and similar items not specified elsewhere shall be provided and installed under this Section. All embedded items shall be hot dip galvanized after fabrication. After galvanizing, coat with zinc chromate paint. Stainless steel items shall not be galvanized.

PART 3 - EXECUTION

3.1 INSPECTION

A. CONTRACTOR and his/her installer shall examine the substrate and the conditions under which Work is to be performed and notify CONSTRUCTION MANAGER of unsatisfactory conditions. Do not proceed with the Work until unsatisfactory conditions have been corrected in a manner acceptable to CONSTRUCTION MANAGER. Provide 24 hours notice to CONSTRUCTION MANAGER of intended concrete placements.

3.2 CONCRETE MIXING

A. General:

1. Concrete may be produced at batch plants or it may be produced by the ready-mixed process. Batch plants shall comply with the recommendations of ACI 304, and shall have sufficient capacity to produce concrete of the qualities specified, in quantities required to meet the construction schedule. All plant facilities are subject to testing laboratory inspection and acceptance of CONSTRUCTION MANAGER.
2. Mixing:

    a. Mix concrete with an approved rotating type batch machine, except where hand mixing of very small quantities may be permitted.
    b. Remove hardened accumulations of cement and concrete frequently from drum and blades to assure acceptable mixing action.
    c. Replace mixer blades when they have lost 10 percent of their original height.
    d. Use quantities such that a whole number of bags of cement is required, unless otherwise permitted.

B. Ready-Mix Concrete:

1. Comply with the requirements of ASTM C 94, and as herein specified. Proposed changes in mixing procedures, other than herein specified, must be accepted by CONSTRUCTION MANAGER before implementation.

    a. Plant equipment and facilities: Conform to National Ready- Mix Concrete Association "Plant and Delivery Equipment Specification".
    b. Mix concrete in revolving type truck mixers which are in good condition and which produce thoroughly mixed concrete of the specified consistency and strength.

c. Do not exceed the proper capacity of the mixer.
d. Mix concrete for a minimum of two minutes after arrival at the job site, or as recommended by the mixer manufacturer.
e. Do not allow the drum to mix while in transit.
f. Mix at proper speed until concrete is discharged.
g. Maintain adequate facilities at the job site for continuous delivery of concrete at the required rates.
h. Provide access to the mixing plant for CONSTRUCTION MANAGER at all times.

C. Maintain equipment in proper operating condition, with drums cleaned before charging each batch. Schedule rates of delivery in order to prevent delay of placing the concrete after mixing, or holding dry- mixed materials too long in the mixer before the addition of water and admixtures.

3.3 TRANSPORTING CONCRETE

A. Transport and place concrete not more than 90 minutes after water has been added to the dry ingredients.

B. Take care to avoid spilling and separation of the mixture during transportation.

C. Do not place concrete in which the ingredients have been separated.

D. Do not re-temper partially set concrete.

E. Use suitable and approved equipment for transporting concrete from mixer to forms.

3.4 CONCRETE PLACEMENT

A. General: Place concrete continuously so that no concrete will be placed on concrete, which has hardened sufficiently to cause the formation of seams or planes of weakness within the section. If a section cannot be placed continuously, provide construction joints as specified in Section 03251 of these Specifications and approved in writing by the CONSTRUCTION MANAGER. Deposit concrete as nearly as practical in its final location to avoid segregation due to rehandling or flowing. Do not subject concrete to any procedure, which will cause segregation.

1. Screed concrete, which is to receive other construction to the proper level to avoid excessive skimming or grouting.
2. Do not use concrete which becomes non-plastic and unworkable, or does not meet the required quality control limits, or which has been contaminated by foreign materials. Do not use retempered concrete. Remove rejected concrete from the job site and dispose of it in an acceptable location.
3. Do not place concrete until all forms, bracing, reinforcement, and embedded items are in final and secure position.
4. Unless otherwise approved, place concrete only when CONSTRUCTION MANAGER is present.

5. Allow a minimum of 3 days before placing concrete against a slab or wall already in place.
6. In order to minimize the effects of shrinkage, concrete shall be placed in units as bounded by construction joints shown on the Contract Drawings. The placing of units shall be done by placing alternate units in a manner such that each unit placed shall have cured for at least seven (7) calendar days before a contiguous unit or units are placed, except that the corner sections of vertical walls shall not be placed until all the adjacent wall panels have cured at least fourteen (14) calendar days.

B. Concrete Conveying:

1. Handle concrete from the point of delivery and transfer to the concrete conveying equipment and to the locations of final deposit as rapidly as practical by methods, which will prevent segregation and loss of concrete mix materials.
2. Provide mechanical equipment for conveying concrete to ensure a continuous flow of concrete at the delivery end. Provide runways for wheeled concrete conveying equipment from the concrete delivery point to the locations of final deposit. Keep interior surfaces of conveying equipment, including chutes, free of hardened concrete, debris, water, snow, ice and other deleterious materials.
3. Do not use chutes for distributing concrete unless approved in writing by CONSTRUCTION MANAGER.

    a. Provide sketches showing methods by which chutes will be employed when requesting such approval.
    b. Design chutes, if permitted, with proper slopes and supports to permit efficient handling of the concrete.

4. Pumping concrete is permitted, however do not use aluminum pipe for conveying.

C. Placing Concrete into Forms:

1. Deposit concrete in forms in horizontal layers not deeper than 18 inches and in a manner to avoid inclined construction joints. Where placement consists of several layers, place concrete at such a rate that concrete which is being integrated with fresh concrete is still plastic.
2. Do not permit concrete to free-fall within the form from a distance exceeding 4 feet. Windows shall be placed in the forms at four 4 feet on center for the full height of the wall.
3. Remove temporary spreaders in forms when concrete placing has reached the elevation of such spreaders.
4. Consolidate concrete placed in forms by mechanical vibrating equipment supplemented by hand spading, rodding or tamping. Use equipment and procedures for consolidation of concrete in accordance with the applicable recommended practices of ACI 309. Vibration of forms and reinforcing will not be permitted, unless otherwise accepted by CONSTRUCTION MANAGER.
5. Do not use vibrators to transport concrete inside of forms. Insert and withdraw vibrators vertically at uniformly spaced locations not farther than the visible

effectiveness of the machine. Place vibrators to rapidly penetrate the layer of concrete and at least 6 inches into the preceding layer. Do not insert vibrators into lower layers of concrete that have begun to set. At each insertion, limit the duration of vibration to the time necessary to consolidate the concrete and complete embedment of reinforcement and other embedded items without causing segregation of the mix.

6. Do not place concrete in beam and slab forms until the concrete previously placed in columns and walls is no longer plastic.
7. Force concrete under pipes, sleeves, openings and inserts from one side until visible from the other side to prevent voids.
8. CONTRACTOR shall provide illumination into bottom of wall forms.

D. Placing Concrete Slabs:

1. Deposit and consolidate concrete slabs in a continuous operation, within the limits of construction joints, until the placing of a panel or section is completed.
2. Consolidate concrete during placing operations using mechanical vibrating equipment, so that concrete is thoroughly worked around reinforcement and other embedded items and into corners.
3. Consolidate concrete placed in beams and girders of supported slabs, and against bulkheads of slabs on ground, as specified for formed concrete structures.
4. Bring slab surfaces to the correct level. Smooth the surface, leaving it free of humps or hollows. Do not sprinkle water on the plastic surface. Do not disturb the slab surfaces prior to beginning finishing operations.

E. Bonding for Next Concrete Pour: Roughen surfaces of set concrete at all joints, except where bonding is obtained by use of a concrete bonding agent. Construction joints shown on the Drawings are specified in Section 03251 of these Specifications. Clean surfaces of laitance, coatings, loose particles, and foreign matter. Roughen surfaces in a manner to expose bonded aggregate uniformly and to not leave laitance, loose particles of aggregate, or damaged concrete at the surface.

1. Prepare for bonding of fresh concrete to new concrete that has set but is not fully cured, as follows:

   a. Thoroughly wet the surface but allow no freestanding water.
   b. For horizontal surfaces place a 2-inch layer of mortar, 1-part sand and 1-part cement with water, over the hardened concrete surface.
   c. Place fresh concrete before the mortar has attained its initial set.

2. Bonding of fresh concrete to fully cured hardened concrete or existing concrete, and horizontal surfaces, which will receive a topping, shall be accomplished as indicated.

F. Quality of Concrete Work:

1. Make all concrete solid, compact and smooth, and free of laitance, cracks and cold joints.

2. All concrete for liquid retaining structures, and all concrete in contact with earth, water, or exposed directly to the elements shall be watertight.
3. Cut out and properly replace to the extent ordered by CONSTRUCTION MANAGER, or repair to the satisfaction of Construction Manager, surfaces which contain cracks or voids, are unduly rough, or are in any way defective. Thin patches or plastering will not be acceptable.
4. All leaks through concrete, and cracks, holes or other defective concrete in areas of potential leakage, shall be repaired and made watertight by CONTRACTOR.
5. Repair, removal, and replacement of defective concrete as ordered by CONSTRUCTION MANAGER shall be at no additional cost to OWNER.

G. Cold Weather Placing:

1. Protect all concrete Work from physical damage or reduced strength, which could be caused by frost, freezing actions, or low temperatures, in compliance with the requirements of ACI 306 and as herein specified.
2. When the air temperature has fallen to or may be expected to fall below 40 F, provide adequate means to maintain the temperature, in the area where concrete is being placed, at between 50□ F and 70□ F for at least seven days after placing. Provide temporary housings or coverings including tarpaulins or plastic film. Maintain the heat and protection, if necessary, to insure that the ambient temperature does not fall more than 30□ F in the 24 hours following the seven-day period. Avoid rapid dry-out of concrete due to overheating, and avoid thermal shock due to sudden cooling or heating.
3. When air temperature has fallen to or is expected to fall below 40□ F, uniformly heat all water and aggregates before mixing as required to obtain a concrete mixture temperature of not less than 55□ F and not more than 85□ F at point of placement.
4. Do not use frozen materials containing ice or snow. Do not place concrete on frozen subgrade or on subgrade containing frozen materials. Ascertain that forms, reinforcing steel, and adjacent concrete surfaces are entirely free of frost, snow and ice before placing concrete.
5. Do not use salt and other materials containing antifreeze agents or chemical accelerators, or set-control admixtures, unless approved by CONSTRUCTION MANAGER, in mix designs.

H. Hot Weather Placing:

1. When hot weather conditions exist that would seriously impair the quality and strength of concrete, place concrete in compliance with ACI 305 and as herein specified.
2. Cool ingredients before mixing to maintain concrete temperature at time of placement below 85□ F when the temperature is rising and below 85□ F when the temperature is falling. Mixing water may be chilled, or chopped ice may be used to control the concrete temperature provided the water equivalent of the ice is calculated in the total amount of mixing water.

3. Cover reinforcing steel with water-soaked burlap if it becomes too hot, so that the steel temperature will not exceed the ambient air temperature immediately before embedment in concrete.
4. Wet forms thoroughly before placing concrete.
5. Do not place concrete at a temperature so as to cause difficulty from loss of slump, flash set, or cold joints.
6. Do not use set-control admixtures unless approved by CONSTRUCTION MANAGER in mix designs.
7. Obtain CONSTRUCTION MANAGER'S approval of other methods and materials proposed for use.

3.5 FINISH OF FORMED SURFACES

A. Rough Form Finish:

1. Standard rough form finish shall be the concrete surface having the texture imparted by the form material used, with tie holes and defective areas repaired and patched with mortar of 1 part cement to 1 ½ parts sand and all fins and other projections exceeding 1/4 inch in height rubbed down or chipped off.
2. Use rough form finish for the following:

    a. Exterior vertical surfaces up to 1 foot below grade.
    b. Interior exposed vertical surfaces of liquid containers up to 1 foot below liquid level.
    c. Interior and exterior exposed beams and undersides of slabs.
    d. Other areas shown.

B. Smooth Form Finish:

1. Produce smooth form finish by selecting form materials which will impart a smooth, hard, uniform texture. Arrange panels in an orderly and symmetrical manner with a minimum of seams. Repair and patch defective areas as above with all fins or other projections completely removed and smoothed.
2. Use smooth form finish for surfaces that are to be covered with a coating material. The material may be applied directly to the concrete or may be a covering bonded to the concrete such as waterproofing, dampproofing, painting or other similar system.

C. Smooth Rubbed Finish:

1. Provide smooth rubbed finish to concrete surfaces which have received smooth form finish as follows:

    a. Rubbing of concrete surfaces not later than the day after form removal.
    b. Moistening of concrete surfaces and rubbing with carborundum brick or other abrasive until a uniform color and texture is produced. Do not apply cement grout other than that created by the rubbing process.

2. Except where surfaces have been previously covered as specified above, use smooth rubbed finish for the following:

    a. Interior exposed walls and other vertical surfaces.
    b. Exterior exposed walls and other vertical surfaces down to 1 foot below grade.
    c. Interior and exterior horizontal surfaces, except exterior exposed slabs and steps.
    d. Interior exposed vertical surfaces of liquid containers down to 1 foot below liquid level.
    e. Other areas shown.

D. Related Unformed Surfaces:

1. At tops of walls, horizontal offsets, and similar unformed surfaces occurring adjacent to formed surfaces, strike off smooth and finish with a texture matching the adjacent formed surfaces. Continue the final surface treatment of formed surfaces uniformly across the adjacent unformed surfaces, unless otherwise shown.

3.6 MONOLITHIC SLAB FINISHES

A. Float Finish:

1. After placing concrete slabs, do not work the surface further until ready for floating. Begin floating when the surface water has disappeared or when the concrete has stiffened sufficiently. Check and level the surface plane to a tolerance not exceeding 1/4 inch in 10 feet when tested with a 10 foot straightedge placed on the surface at not less than 2 different angles. Cut down high spots and fill all low spots. Uniformly slope surfaces to drains. Immediately after leveling, refloat the surface to a uniform, smooth, granular texture.
2. Use float finish for the following:

    a. Interior exposed horizontal surfaces of liquid containers except those to receive grout topping.
    b. Exterior below grade horizontal surfaces.

B. Trowel Finish:

1. After floating, begin the first trowel finish operation using a power-driven trowel. Begin final troweling when the surface produces a ringing sound as the trowel is moved over the surface.
2. Consolidate the concrete surface by the final hand troweling operation. Finish shall be free of trowel marks, uniform in texture and appearance, and with a surface plane tolerance not exceeding 1/8 inch in 10 feet when tested with a 10-foot straight edge. Grind smooth surface defects, which would telegraph through applied floor covering system.
3. Use trowel finish for the following:

    a. Interior exposed slabs unless otherwise shown or specified.

b. Slabs to receive resilient floor finishes.

C. Non-Slip Broom Finish:

1. Immediately after float finishing, slightly roughen the concrete surface by brooming in the direction perpendicular to the main traffic route. Use fiber-bristle broom unless otherwise directed. Coordinate the required final finish with CONSTRUCTION MANAGER before application.
2. Use Non-Slip Broom Finish for the following:

a. Exterior exposed horizontal surfaces subject to light foot traffic.
b. Interior and exterior concrete steps and ramps.
c. Horizontal surfaces which will receive a grout topping or a concrete equipment base slab.

3.7 CONCRETE CURING AND PROTECTION

A. General:

1. Protect freshly placed concrete from premature drying and excessive cold or hot temperature, and maintain without drying at a relatively constant temperature for the period of time necessary for hydration of the cement and proper hardening of the concrete.
2. Start initial curing after placing and finishing concrete as soon as free moisture has disappeared from the concrete surface. Keep continuously moist for not less than 72 hours.
3. Begin final curing procedures immediately following initial curing and before the concrete has dried. Continue final curing for at least 7 days and in accordance with ACI 301 procedures. For concrete sections over 30 inches thick and formed walls, continue final curing for an additional 7 days, minimum. Avoid rapid drying at the end of the final curing period.

B. Curing Methods:

1. Perform curing of concrete by moist curing, or by moisture- retaining cover curing. Use curing compound only in cold weather and only when permitted by CONSTRUCTION MANAGER.

a. For curing, use water that is free of impurities which could etch or discolor exposed, natural concrete surfaces.

2. Provide moisture curing by any of the following methods:

a. Keeping the surface of the concrete continuously wet by covering with water.
b. Continuous water-fog spray.
c. Covering the concrete surface with the specified absorptive cover, thoroughly saturating the cover with water, and keeping the absorptive cover continuously wet with sprinklers or porous hoses. Place absorptive cover so as to provide

coverage of the concrete surfaces and edges, with a 4-inch lap over adjacent absorptive covers.

3. Provide moisture-retaining cover curing as follows:

   a. Cover the concrete surfaces with the specified moisture- retaining cover for curing concrete, placed in the widest practical width with sides and ends lapped at least 3 inches and sealed by waterproof tape or adhesive. Immediately repair any holes or tears during the curing period using cover material and waterproof tape.

4. Provide liquid curing compound as follows:

   a. Apply the specified curing compound to all concrete surfaces when permitted by CONSTRUCTION MANAGER. Slabs to receive terrazzo floors, chemical resistant heavy-duty concrete topping or ceramic tile, shall not be cured with liquid curing compound, but shall be moisture cured. The compounds shall be applied immediately after final finishing in a continuous operation by power spray equipment in accordance with the manufacturer's directions. Recoat areas, which are subjected to heavy rainfall within 3 hours after initial application. Maintain the continuity of the coating and repair damage to the coat during the entire curing period. For concrete surfaces, which will be in contact with potable water, the manufacturer shall certify that the curing compound used is EPA and NSF approved.

C. Curing Formed Surfaces:

1. Cure formed concrete surfaces, including the undersides of girders, beams, supported slabs and other similar surfaces by moist curing with the forms in place for the full curing period or until forms are removed. If forms are removed, continue curing by methods specified above, as applicable.

D. Curing Unformed Surfaces:

1. Initially cure unformed surfaces, such as slabs, floor topping, and other flat surfaces by using the appropriate method specified above.
2. Final cure unformed surfaces, unless otherwise specified, by utilizing methods specified above, as applicable.

E. Temperature of Concrete During Curing:

1. When the atmospheric temperature is 40□ F and below, maintain the concrete temperature between 50□ F and 70□ F continuously throughout the curing period. When necessary, make arrangement before concrete placing for heating, covering, insulation or housing as required to maintain the specified temperature and moisture conditions continuously for the concrete curing period. Provide cold weather protection complying with the requirements of ACI 306.

2. When the atmospheric temperature is 80□ F and above, or during other climatic conditions which will cause too rapid drying of the concrete, make arrangements before the start of concrete placing for the installation of wind breaks or shading, and for fog spraying, wet sprinkling, or moisture-retaining covering. Protect the concrete continuously for the concrete curing period. Provide hot weather protection complying with the requirements of ACI 305, unless otherwise specified.
3. Maintain concrete temperature as uniformly as possible, and protect from rapid atmospheric temperature changes. Avoid temperature changes in concrete which exceed 5° F in any one hour and 50° F in any 24 hour period.

F. Protection from Mechanical Injury:

1. During the curing period, protect concrete from damaging mechanical disturbances including load stresses, heavy shock, excessive vibration, and from damage caused by rain or flowing water. Protect all finished concrete surfaces from damage by subsequent construction operations.

3.8 FIELD QUALITY CONTROL

A. Field quality control testing shall be performed by the OWNER. CONSTRUCTION MANAGER will make slump tests and will direct the number of tests and cylinders required. The OWNER will make standard compression test cylinders and entrained air tests as specified below. CONTRACTOR shall furnish all necessary assistance required by CONSTRUCTION MANAGER. The CONTRACTOR shall be charged for the cost of any additional tests and investigation on work performed which does not meet the specifications.

3.9 MISCELLANEOUS CONCRETE ITEMS

A. Curbs:

1. Provide monolithic finish to interior curbs by stripping forms while concrete is still green and steel-troweling surfaces to a hard, dense finish with corners, intersections, and terminations slightly rounded.
2. Exterior curbs shall have rubbed finish for vertical surfaces and a broomed finish for top surfaces.

B. Equipment Bases:

1. Unless specifically shown otherwise, provide concrete bases for all pumps and other equipment. Construct bases to the dimensions shown, or as required to meet manufacturers; requirements and Drawing elevations. Where no specific elevations are shown, bases shall be 6-inches thick and extend 3-inches outside the metal equipment base or supports. Bases to have smooth trowel finish, unless a special finish such as terrazzo, ceramic tile or heavy-duty concrete topping is required. In those cases, provide appropriate concrete finish.
2. Include all concrete equipment base work not specifically included under other Sections or other contracts.

3. In general, place bases up to 1 inch below the metal base. Properly shim equipment to grade and fill 1-inch void with non-shrink grout as specified in Section 03600, Grout.

3.10 CONCRETE REPAIRS

A. Repair of Formed surfaces:

1. Repair exposed-to-view formed concrete surfaces, that contain defects, which adversely affect the appearance of the finish. Surface defects that require repair include color and texture irregularities, cracks, spalls, air bubbles, honeycomb, rock pockets, and holes left by the rods and bolts; fins and other projections on the surface; and stains and other discolorations that cannot be removed by cleaning.
2. Repair concealed formed concrete surfaces that may contain defects that adversely affect the durability of the concrete. Surface defects that require repair include cracks in excess of 0.01-inch wide, cracks of any width and other surface deficiencies which penetrate to the reinforcement or completely through non-reinforced sections, honeycomb, rock pockets, holes left by tie rods and bolts, and spalls except minor breakage at corner.
3. Repair structural cracks and cracks in water-holding structures.

B. Method of Repair of Formed Surfaces:

1. Repair and patch defective areas with cement mortar immediately after removal of forms and as directed by CONSTRUCTION MANAGER.
2. Cut out honeycomb, rock pockets, voids over ½-inch diameter, and holes left by tie rods and bolts, down to solid concrete but, in no case, to a depth of less than 1 inch. Make edges of cuts perpendicular to the concrete surface. Before placing the cement mortar, thoroughly clean, dampen with water, and brush-coat the area to be patched with the specified bonding agent.

    a. For exposed-to-view surfaces, blend white Portland cement and standard Portland cement so that, when dry, the patching mortar color will match the color of the surrounding concrete. Contractor shall impart texture to repaired surfaces to match texture of existing adjacent surfaces. Provide test areas at inconspicuous locations to verify mixture, texture and color match before proceeding with the patching. Compact mortar in place and strike off slightly higher than the surrounding surface.

3. Cracks which require repair shall be pressure grouted using one of the following. Apply in accordance with the manufacturer's directions and recommendations.

    a. Sikadur Hi-Mod and Gel, as manufactured by Sika Chemical Company.
    b. Euco Epoxy #452 Epoxy System, as manufactured by The Euclid Chemical Company.
    c. Or equal.

4. Fill holes extending through concrete by means of a plunger- type gun or other suitable device from the least exposed face, using a flush stop held at the exposed face to ensure completely filling.
5. Waterblast exposed-to-view surfaces that require removal of stains, grout accumulations, sealing compounds, and other substances marring the surfaces.

C. Repair of Unformed Surfaces:

1. Test unformed surfaces, such as monolithic slabs, for smoothness and to verify surface plane to the tolerances specified for each surface and finish. Correct low and high areas as herein specified.
2. Test unformed surfaces sloped to drain for trueness of slope, in addition to smoothness, using a template having the required slope. Correct high and low areas as herein specified.
3. Repair finish of unformed surfaces that contain defects which adversely affect the durability of the concrete. Surface defects, as such, include crazing, cracks in excess of 0.01-inch wide or which penetrate to the reinforcement or completely through non-reinforced sections regardless of width, spalling, popouts, honeycomb, rock pockets, and other objectionable conditions.
4. Repair structural cracks and cracks in water-holding structures.

D. Methods of Repair of Unformed Surfaces:

1. Correct high areas in unformed surfaces by grinding, after the concrete has cured sufficiently so that repairs can be made without damage to adjacent areas.
2. Correct low areas in unformed surfaces during, or immediately after completion of surface finishing operations by cutting out the low areas and replacing with fresh concrete. Finish repaired areas to blend into adjacent concrete. Use one of the following. Apply in accordance with the manufacturer's directions and recommendations.

    a. Poly-Patch, as manufactured by The Euclid Chemical Company.
    b. Sikatop, as manufactured by Sika Chemical Company.
    c. Or equal.

3. Repair defective areas, except random cracks and single holes not exceeding 1-inch diameter, by cutting out and replacing with fresh concrete. Remove defective areas to sound concrete with clean, square cuts, and expose reinforcing steel with at least 3/4-inch clearance all around. Dampen all concrete surfaces in contact with patching concrete and brush with the specified bonding agent. Place patching concrete before grout takes its initial set. Mix patching concrete of the same materials and proportions to provide concrete of the same type or class as the original adjacent concrete. Place, compact and finish as required to blend with adjacent finished concrete. Cure in the same manner as adjacent concrete.
4. Repair isolated random cracks, and single holes not over 1-inch diameter, by the dry-pack method. Groove the top of cracks, and cut out holes to sound concrete and clean of dust, dirt and loose particles. Dampen all cleaned concrete surfaces and

brush with the specified bonding agent. Place dry-pack before the cement grout takes its initial set. Mix dry-pack, consisting of 1 part Portland cement to 2-1/2 parts fine aggregate passing a No. 16 mesh sieve, using only enough water as required for handling and placing. Compact dry-pack mixture in place and finish to match adjacent concrete. Keep patched areas continuously moist for not less than 72 hours.

5. Cracks which require repair shall be pressure grouted using one of the following. Apply in accordance with the manufacturer's directions and recommendations.

    a. Sikadur Hi-Mod L.V. and Gel, as manufactured by Sika Chemical Company.
    b. Euco Epoxy #452 Epoxy System, as manufactured by The Euclid Chemical Company.
    c. Or equal.

6. Assure that surface is acceptable for flooring material to be installed in accordance with manufacturer's recommendations.

E. Other Methods of Repair:

1. Repair methods not specified above may be used if approved in writing by CONSTRUCTION MANAGER.

** END OF SECTION **

This page left intentionally blank.

SECTION 03490

PRE-CAST CONCRETE TRENCH

PART 1 - GENERAL

1.1 SCOPE

A. The Contractor shall furnish and install a precast concrete underground utility trench system and accessories for electrical cabling and hydraulic hoses as indicated on the Contract Drawings and specified herein.

1.2 DESIGN

A. The precast components shall be designed to conform to requirements stated in ASTM C857 "Practice for Minimum Structural Design Loading for Underground Precast Concrete Utility Structures, ASTM C858 "Specifications for Underground Precast Concrete Utility Structures" and ACI-318 "Building Code Requirements for Structural Concrete and Commentary on Building Code Requirements in Structural Concrete".

B. The precast trench system shall be designed so that supplemental support such as protection rods or cross supports are not required.

1.3 SUBMITTALS

A. The Contractor shall submit information in accordance with Section 01300, Submittals, to substantiate compliance with this specification. In addition, the following specific information shall be submitted.

1. Product Technical Data
    a. Acknowledgement that products submitted meet requirements of standards referenced.
    b. Product details, catalog cut sheets.
    c. Manufacturer’s installation instructions.

2. Fabrication Drawings and Calculations: The CONTRACTOR shall submit shop drawings and calculations for all pre-cast concrete items and trench lids signed and stamped by a civil engineer registered in California. Submitted drawings shall show all dimensions, reinforcement, lifting inserts, openings, and all other inserts.

PART 2 - PRODUCTS

2.1 GENERAL

A. The trench system shall consist of precast concrete U-shaped base units and removable covers, as manufactured by Trenwa Inc. of Fort Thomas, Kentucky or an approved equal.

B. All sections of trench shall be designed to carry HS20, 32,000 pounds axle loading and shall be furnished in standard 10-foot lengths, except that special lengths shall be furnished where required by the layout.

C. Trench base units shall have galvanized steel impact angles embedded along the top edges for durability.

D. The interior clear trench dimensions shall be as shown on the Contract Drawings.

E. The lids for the road crossing trench shall be made of FRP Monolithic Composite designed to carry HS20, 32,000 pounds axle loading as manufactured by Fibrelite or an approved equal.

2.2 MATERIALS

A. Cement shall conform to ASTM C150/C150M, "Specification for Portland Cement".

B. Fine and coarse aggregates shall conform to ASTM C33/C33M, "Specification for Concrete Aggregates".

C. Chemical Admixtures shall conform to ASTM C260/C260M "Air-Entraining Admixtures for Concrete and ASTM C494/C494M "Chemical Admixtures for Concrete".

D. Steel reinforcing bars shall conform to ASTM A615 "Specification for Deformed and Plain Carbon Steel Bars for Concrete Reinforcement".

E. Steel reinforcing wires shall conform to ASTM A496 "Specification for Steel Wire, Deformed, for Concrete Reinforcement".

F. Steel reinforcing welded wire mats shall conform to A1064 Standard Specification for Carbon-Steel Wire and Welded Wire Reinforcement, Plain and Deformed, for Concrete".

G. Embedded steel shapes and plates shall conform to ASTM A36/C36M "Standard Specification for Carbon Structural Steel".

2.3 CONCRETE

A. Batching, mixing and placing of concrete shall conform to ACI A301 "Specifications for Structural Concrete" and ASTM C94/C94M "Specification for Ready-Mix Concrete" and ACI 304 "Guide for Measuring, Mixing, Transporting and Placing Concrete". All materials shall be pre-weighed prior to mixing.

B. Concrete shall obtain a minimum compressive strength of 5,000 psi at 28 days of age.

C. Concrete shall contain 6% entrained air by volume (plus or minus 1%).

2.4 REINFORCEMENT

A. Fabrication and placement shall conform to ACI-318 "Building Code Requirements for Structural Concrete".

2.5 ACCESSORIES

A. The Manufacturer shall provide the following accessories:
   1. EPDM corner guards for all t's, crosses, transitions, and mitered corners 45 degrees and higher to prevent abrasion to cables pulled around the corners.
   2. Two (2) manual lifting tools for trench lids.

B. The Contractor shall provide the following accessories:
   1. FRP trench dividers as shown on the Contract Drawings.

PART 3 - EXECUTION

3.1 INSTALLATION

A. The trench system and accessories shall be installed by the Contractor per the manufacturer's recommendations unless otherwise required by the plans.

B. Trenches shall be installed level and flush with the adjacent finished surface.

C. A crushed rock base shall be installed as shown on the drawings.

D. Trench base units shall be backfilled with crushed aggregate base or SE-30 sand compacted to 95% relative compaction.

** END OF SECTION **

This page left blank intentionally

SECTION 03600

GROUT

PART 1 - GENERAL

1.1 WORK OF THIS SECTION

A. Work of this Section shall include:

1. Grouting of equipment baseplates
2. Patching cavities in concrete
3. Other grouting specified or indicated on Drawings

1.2 RELATED SECTIONS

A. The Work of the following Sections applies to the Work of this Section, Other Sections, not referenced below, shall also apply to the extent required for proper performance of this Work.

1. Division 1
2. Section 03300, Cast-in-Place Concrete
3. Section 05503, Anchor Bolts, Adhesive Anchors, Expansion Anchors, and Concrete Inserts

1.3 QUALITY ASSURANCE

A. Applicable Standards

1. Corps of Engineering Specification CRD-C 621 - Specification for Non-Shrink Grout

PART 2 - PRODUCTS

2.1 MATERIALS

A. Non-Shrinking Non-Metallic Grout: Master Builders "Special LL-713 Grout," Sauereisen Cements "F-100 Level Fill Grout," U.S. Grout "Five Star Grout," The Upco Corp "Upcon," or equivalent

B. Epoxy Grout:

1. Adhesive: Ceilcote "HT648 Grout," Exxon Chem Co. "Escoweld 2505," Sika "Sikadur Hi-Mod," or equivalent
2. Aggregate: Ceilcote "HT648," Exxon Chem Co. "Escoweld 2510," Sika "Colma Quartzite Aggregate," or equivalent

C. Water: Clean and free from deleterious substances

2.2 MANUFACTURE

A. Non-Metallic Non-Shrinking Grout: Factory pre-mixed requiring only water addition in the field

B. Epoxy Grout

1. Three component epoxy resin system

a. Two liquid epoxy components
b. One inert aggregate filler component

2. Each component furnished in separate package for mixing at jobsite

PART 3 - EXECUTION

3.1 PREPARATION

A. Non-Shrinking Non-Metallic Grout

1. Clean concrete surface to receive grout
2. Saturate concrete with water for 24 hours prior to grouting

B. Epoxy Grout: Apply only to clean, dry, sound surface

3.2 APPLICATION

A. Non-Shrinking Non-Metallic Grout

1. Mix in a mechanical mixer
2. Use no more water than necessary to produce flowable grout
3. Place in accordance with manufacturer's instructions
4. Completely fill all spaces and cavities below the top of baseplates
5. Provide forms where baseplates and bedplates do not confine grout
6. Where exposed to view finish grout edges smooth
7. Except where a slope is indicated on the Drawings, finish edges flush at the baseplate, bedplate, member or piece of equipment
8. Protect against rapid moisture loss by covering with wet rags or polyethylene sheets
9. Wet cure grout for 7 days, minimum

B. Epoxy Grout

1. Mix and place in accordance with manufacturer's instructions
2. Completely fill all cavities and spaces around dowels and anchors without voids
3. Grout base and bedplates as specified for non-shrinking, non-metallic grout

4. Obtain manufacturer's field technical assistance as required to ensure proper placement

3.3 SCHEDULE

A. Non-Shrinking Non-Metallic Grout: General use

B. Epoxy Grout

1. Patching cavities in concrete
2. Grouting of dowels and anchor bolts into concrete
3. Other uses indicated on Drawings

** END OF SECTION **

This page left intentionally blank.

SECTION 05500

MISCELLANEOUS METALS

PART 1 - GENERAL

1.1 WORK OF THIS SECTION

A. The CONTRACTOR shall provide miscellaneous metals and appurtenances, complete, in accordance with the Contract Documents.

B. Work Included in this Section. Principal items are:

1. Shop/erection drawings and samples.
2. Iron castings.
3. Steel channels and/or angle frames and thresholds with anchors.
4. Welding electrodes.
5. Shop prime paint.
6. Guard post assemblies of removable and stationary types.
7. Miscellaneous iron and steel items indicated, specified, or required for completion of the Contract, unless included under other Sections.
8. Galvanizing and shop primer finishes, including field touch-up.

1.2 RELATED SECTIONS

A. The Work of the following Sections apply to the Work of this Section. Other, not referenced below, shall also apply to the extent required for proper performance of this Work.

1. Section 03200, Concrete Reinforcement.
2. Section 03300, Cast-in-Place Concrete.
3. Section 03600, Grout.
4. Section 05503, Anchor Bolts, Adhesive Anchors, Expansion Anchors and Concrete Inserts.

1.3 REFERENCE SPECIFICATIONS, CODES AND STANDARDS

A. The current edition of the Uniform Building Code (UBC).

B. Except as otherwise indicated, the current editions of the following Federal Specifications apply to the Work of this Section:

1.	QQ-F-461	Floor Plate, Steel, Rolled
2.	MIL-G-18015 A	(Ships) Aluminum Planks. (6063-T6)
3.	MIL-A-907E	Antiseize Thread Compound, High Temperature

C. Except as otherwise indicated, the current editions of the following commercial standards apply to the Work of this Section:

1. Commercial Standards:

AA-M32C22A41	Aluminum Association
AASHTO	Standard Specification for Highway Bridges
AISC	Specification for Design, Fabrication and Erection of Structural Steel for Buildings with Commentary and Code of Standard Practice for Steel Buildings and Bridges
AISC	Manual of Steel Construction
AISI	Design of Light Gauge, Cold-Formed Steel Structural Members
AWS B2.1	Welding Procedures and Performance Qualifications
AWS D1.1	Structural Welding Code - Steel
AWS D1.2	Structural Welding Code - Aluminum
AWS QC1	Standard for AWS Certification of Welding Inspectors
NFPA 101	Life Safety Code
NAAMM	National Association of Architectural Metal Manufacturers Metal Stairs Manual
AWS-AS	Welding of Stainless Steel with Electrodes and Techniques

2. ASTM Standards in Building Codes:

ASTM A36	Specification for Structural Steel
ASTM A48	Specification for Gray Iron Castings
ASTM A53	Specification for Pipe, Steel, Black and Hot-Dipped, Zinc-Coated Welded and Seamless
ASTM A123	Specification for Zinc (Hot-Dip Galvanized) Coatings on Iron and Steel Products
ASTM A125	Specification for Steel Springs, Helical, Heat Treated
ASTM A153	Specification for Zinc Coating (Hot-Dip) on Iron and Steel Hardware
ASTM A167	Specification for Stainless and Heat-Resisting Chromium-Nickel Steel Plate, Sheet and Strip
ASTM A193	Specification for Alloy-Steel and Stainless Steel Bolting Materials for High-Temperature Service
ASTM A194	Specification for Carbon and Alloy Steel Nuts for Bolts for High Pressure and High-Temperature Service
ASTM A276	Specification for Stainless Steel Bars and Shapes
ASTM A283	Specification for Low and Intermediate Tensile Strength Carbon Steel Plates
ASTM A307	Specification for Carbon Steel Bolts and Studs, 60,000 psi Tensile
ASTM A320	Specification for Alloy-Steel Bolting Material for Low-Temperature Service
ASTM A325	High Strength Bolts for Structural Steel Joints

ASTM A424	Specification for Steel, Sheet, for Porcelain Enameling
ASTM A500	Specification for Cold-Formed Welded and Seamless Carbon Steel Structural Tubing in Rounds and Shapes
ASTM A536	Specification for Ductile Iron Casting
ASTM A563	Specification for Carbon and Alloy Steel Nuts
ASTM A569	Specification for Steel, Carbon (0.15 Maximum Percent), Hot Rolled Sheet and Strip Commercial Quality
ASTM A575	Specifications for Steel Bars, Carbon, Merchant Quality, M-Grades
ASTM A786	Specification for Rolled Steel Floor Plates
ASTM A992	Steel for Structural Shapes for Use in Building Framing
ASTM B98	Specification for Copper-Silicon Alloy Rod, Bar, and Shapes
ASTM B210	Specification for Aluminum and Aluminum-Alloy Drawn Seamless Tubes
ASTM B221	Specification for Aluminum and Aluminum-Alloy Extruded Bars, Rods, Wire, Shapes, and Tubes
ASTM B438	Specification for Sintered Bronze Bearings (Oil-Impregnated)

3. Trade Standards

Welded Austenitic Chromium-Nickel Stainless Steel Technique and Properties, as Published by the International Nickel Company, Inc., New York, New York.

Porcelain Enamel Institute, Inc.

1.4 CONTRACTOR SUBMITTALS

A. Shop Drawings: Shop drawings shall be submitted in accordance with Division 1 of the Specifications.

B. Layout Drawings: Layout drawings for grating shall be submitted showing the direction of span, type and depth of grating, size and shape of grating panels, seat angle details, and details of grating hold down fasteners. Load and deflection tables shall be submitted for each style and depth of grating used.

C. Product List and Product Data Sheets: Protective Coating, a product list shall be submitted with product data sheets of intended shop coats.

1.5 QUALITY ASSURANCE

A. Miscellaneous metals shall be fabricated and erected in accordance with the latest edition of the AISC "Specification for the Design, Fabrication and Erection of Steel for Buildings", and "Code of Standard Practice for Steel Buildings and Bridges", except whenever there is a discrepancy between the design drawings and this specification, the Drawings shall govern.

B. Aluminum work shall be fabricated and erected in conformance with applicable requirements of the UBC and referenced standards of the Aluminum Association.

C. Continuous Inspections: All welding and high strength bolting of structural steel assemblies shall be conducted under the continuous inspection of an International Conference of Building Officials (ICBO) certified "Special Inspector" selected by the OWNER with costs borne by the OWNER. Should such fabrication be performed in the shop of a licensed fabricator approved by the governing building official and certified by the ICBO Evaluation Services, Inc. Only the field welding and high strength bolting of structural steel assemblies will be required to be performed under continuous inspection of the ICBO-certified "Special Inspector." The OWNER shall be notified at least 24 hours in advance of needed inspections. Copies of inspection reports for shall be provided for the OWNER, CONTRACTOR, and governing building official.

PART 2 - PRODUCTS

2.1 MATERIALS

A. Steel: Steel shall conform to the following requirements:

1.	Shapes, Plates, Bars	ASTM A 36 or ASTM A992.
2.	Pipe, Pipe Columns, Bollards unless noted otherwise.	ASTM A 53, Type E or S, Grade B Schedule 40,
3.	Tubes	ASTM A 500, Grade B

B. Aluminum: Aluminum structural shapes shall be new and conform to applicable Federal Specification for 6061-T6 alloy, unless otherwise noted. Aluminum Pipe shall conform to Schedule 40, or greater.

C. Stainless Steel: Unless otherwise designated or approved, stainless steel alloy types shall conform to ASTM A167 and ASTM A276 as follows:

1. Stainless steel plates, pipe and structural shapes: Type 316L.
2. Stainless steel bolts, nuts and washers: Type 316L where connecting or bearing on aluminum.

D. Cast Iron: Cast iron shall conform to ASTM A48, except as otherwise noted.

E. Ductile Iron: Ductile iron shall conform to ASTM A536, using Grade 60-40-18 or better, except as otherwise noted.

2.2 STEEL PIPE HANDRAILS

Steel pipe handrails, including brackets and related hardware, which may be partially or wholly submerged, or which are located inside a hydraulic structure, shall be entirely of Type 316L stainless steel. All other steel pipe handrails shall be standard 1-inch black steel pipe made up by welding. All steel pipe handrail shall be picked at fabrication plant and shall be hot-dip galvanized after fabrication.

2.3 CHECKERED PLATE

A. Checkered Plate: Checkered plate shall conform to Federal Specification QQ-F461. Checkered plate shall be not less than1/4-inch thick, and shall have a pattern of raised lugs on one face and shall be smooth on the opposite face. Lugs shall be a minimum of one inch in length and raised a minimum of 0.050-inch above the surface. The lugs shall be located in a pattern in which the lugs are oriented at 90 degrees from the adjacent lugs in two orthogonal directions. The rows of lugs shall be oriented at 45 degrees from the edges of the plates.

B. Plate Material: Where no plate material is indicated, aluminum shall be provided. Unless indicated otherwise, the minimum plate thickness shall be as required to limit deflection, resulting from a live load of 100 psf, to1/4-inch or the span divided by 240, whichever is less.

2.4 IRON CASTINGS

A. General: Iron castings shall be of uniform quality, free from blowholes, porosity, hard spots, shrinkage, distortion, or other defects. They shall be smooth and well cleaned by shotblasting.

B. Covers and Grates: Covers and grates shall fit together evenly, so that the cover fits flush with the surrounding surface and so that the cover does not rock or rattle when loading is applied. Round covers and frames shall have machined bearing surfaces.

C. Design Loads: Covers and grates with matching frames shall be designed to support the following loadings:

1. Where located within a structure, the design loading shall match that required for the adjacent floor area, or, if no loading is given, a minimum of 300 pounds per square foot, unless indicated otherwise.
2. Exterior covers and grates shall be designed for AASHTO HS-20 loading unless indicated otherwise.

2.5 GALVANIZING

A. Galvanizing for Iron and Steel: Galvanizing for iron and steel shall conform to ASTM A123, with the average weight of 2.0 ounces per square foot, and not less than 1.8 ounces per square foot.

B. Ferrous Metal Hardware Items: Ferrous metal hardware items shall conform to ASTM A153, with average coating weight of 1.3 ounces per square foot.

2.6 WELDING ELECTRODES

A. Steel Electrodes: Welding electrodes shall conform with AWS D1.1, except E7024 rods or electrodes shall not be used.

B. Aluminum Electrodes: Contingent upon alloys being welded, all welds shall conform to the requirements of AWS D1.2.

C. Stainless Steel Electrodes: Welding of stainless steel with electrodes and techniques shall conform to the pertinent AWS A5 series specification, and as recommended in Welded Austenitic Chromium-Nickel Stainless Steel Techniques and Properties as published by the International Nickel Company, Inc., New York, New York.

2.7 BOLTS

A. Bolt Requirements: Bolts shall comply with the following:

1. Nuts shall be capable of developing the full strength of the bolts. Threads shall be Coarse Thread Series conforming to the requirements of the American Standard for Screw Threads. Bolts and cap screws shall have hexagon heads and nuts shall be Heavy Hexagon Series.
2. The length of all bolts shall be such that after joints are made up, each bolt shall extend through the entire nut, but in no case more than 1/2-inch beyond the nut.

B. Standard Service Bolts (Not Buried or Inside Tanks or Channels): Except where otherwise indicated, bolts and nuts shall be steel and shall be galvanized after fabrication. Threads on galvanized bolts and nuts shall be formed with suitable taps and dies such that they retain their normal clearance after hot-dip galvanizing. Except as otherwise indicated herein, steel for bolts, anchor bolts and cap screws shall be in accordance with the requirements of ASTM A325, or threaded parts of ASTM A36. ASTM A325 bolts and nuts shall not be galvanized.

C. Bolts Buried or Inside Tanks or Channels: Unless otherwise indicated, bolts, anchor bolts, nuts and washers which are buried, submerged, or below the top of the wall inside any hydraulic structure shall be of Type 316 stainless steel.

2.8 SHOP PRIME PAINT

To ensure compatibility with deferred field-applied paint or coating systems, for ferrous metals other than stainless steel, galvanized steel and cast iron, provide surface preparations, and use shop prime paint product and manufacturer as painting, or protective coating system intended for field application specified in Section 09800, Protective Coatings. Shop prime shall not be provided on portions of work immediately adjacent to intended field welds, nor portions intended for embedment.

2.9 MANUFACTURERS

A. Products of the type or model (if any) indicated shall be manufactured by one of the following (or equal):

1. Floor and Cover Plates:
   a. Alcoa C-102 Aluminum Tread Plate.
   b. Reynolds Diamond Tread Plate.

2. Field Repairs to Galvanizing:
   a. “Galvinox”.
   b. “Galvo-Weld”.

PART 3 - EXECUTION

3.1 FABRICATION AND INSTALLATION REQUIREMENTS

A. Fabrication and Erection: Except as otherwise indicated, the fabrication and erection of structural steel shall conform to the requirements of the American Institute of Steel Construction "Manual of Steel Construction."

1. The Work of this Section shall be coordinated with related trades. Particular attention is required for items to be embedded in concrete work. All punchings and drillings, indicated or required, shall be provided for attachment of other work to that of this Section.
2. Compliance with Safety Requirements. Dimensions required for the fabrication and installation of handrails, ladders, grating, plate, pipe hangers and etc. which are not shown on the Drawings, shall conform to the Division of Occupational Health and Safety, General Industrial Safety Orders, State of California.

B. Protection: The CONTRACTOR shall provide and be responsible for protection and repair of adjacent surfaces and areas which may become damaged as a result of work in this Section. Work performed hereunder shall be protected until completion and final acceptance of project by the OWNER. The CONTRACTOR shall repair or replace all damaged or defective work to original specified condition at no additional cost to the OWNER.

1. Finished floor surfaces and adjacent work shall be protected from damage. Concrete floors shall not be overloaded. Mobile equipment used in placing steel shall have pneumatic tires. Steel members shall not be placed directly on floors; pads of timber or other material shall be used for cushioning.
2. Where welding is done in proximity to glass or finished surfaces, such surfaces shall be protected from damage due to weld sparks, spatter or tramp metal.

C. Pipe Rails and Railings: Pipe rails and railing shall be fabricated complete with stanchions, toe plates, welded and bolted fittings, attachments and expansion/contraction provisions true to size configurations to meet or exceed the requirements of CAL/OSHA, and as shown on the Drawings. The CONTRACTOR shall grind and polish welds flush and smooth. Curves, where indicated or necessary, shall be bent on a radius of not less than 5 inches.

1. Safety chains shall be 1/2-inch link chain of same material as the railing with stainless steel harness-type snap to meet or exceed the requirements of CAL/OSHA.
2. Provisions shall be made to drain water from rail systems by drilling weep holes in concealed locations at the lowest possible elevations.

D. Pipe and Conduit Supports and Bracing: Supports and bracing for pipe and conduit shall be fabricated and installed as detailed on the Drawings, in a fully coordinated manner with the Work of other trades. Where shown or indicated, hot-dip galvanized shall be provided after fabrication, with touch-up of abraded or burned galvanizing using materials specified in this Section. Unless otherwise indicated, members shall be shop primed with a rust-inhibitive primer conforming with requirements of Section 09800, Protective Coating.

E. Embedded Steel Channel and Angle Frames: Embedded steel channel and angle frames shall have continuously welded joints. Exposed welds shall be ground flush. Hot-dip galvanizing shall be provided after fabrication.

3.2 WELDING

A. Welding Steel: Welding shall be performed in accordance with the "Structural Welding Code-Steel", AWS D1.1, and current revisions, except where the Gas Metal Arc Welding (GMAW) process is used, the short-circuited mode shall only be used for light gauge material (12 gauge and lighter). Welders shall be qualified by tests in accordance with AWS B2.1.

3.3 GALVANIZING

All structural steel plates shapes, bars and fabricated assemblies required to be galvanized shall, after the steel has been thoroughly cleaned of rust and scale, be galvanized in accordance with the requirements of ASTM A 123. Any galvanized part that becomes warped during the galvanizing operation shall be straightened. Bolts, anchor bolts, nuts and similar threaded fasteners, after being properly cleaned, shall be galvanized in accordance with the requirements of ASTM A 153. Field repairs to galvanizing shall be made using "Galvinox," "Galvo-Weld," or equal.

3.4 PAINTING

One or more shop coats of paint shall be given on all ferrous metals, except cast-iron, ductile iron, stainless steel and galvanized metals. Before priming, surfaces shall be thoroughly cleaned. Shop coats shall be allowed to dry before materials are loaded for delivery to the job site. After erection, all areas shall be painted where the shop coats have been rubbed off or omitted, and all field bolting and welding areas as specified for shop priming. See Section 09800, Protective Coating for surface preparation, prime coatings, finish painting and coatings.

3.5 ISOLATION OF DISSIMILAR METALS

Aluminum members shall be isolated from contact with dissimilar metals, concrete and masonry to provide protection from electrolytic deterioration. The CONTRACTOR shall use non-absorptive tape or gaskets, a heavy brush coat of approved zinc chromate primer made with a synthetic resin vehicle, or a heavy coat of approved alkali, resistant bituminous paint.

** END OF SECTION **

SECTION 05503

ANCHOR BOLTS, ADHESIVE ANCHORS, EXPANSION ANCHORS, AND CONCRETE INSERTS

PART 1 - GENERAL

1.1 WORK OF THIS SECTION

A. CONTRACTOR shall provide all labor, materials, equipment and incidentals as shown, specified and required to furnish and install anchor bolts, adhesive anchors, expansion anchors and concrete inserts as shown and specified.

B. This Section includes all bolts, anchors and inserts required for the Work, but not specified under other Sections.

C. The types of Work using the bolts, anchors and inserts include, but are not limited to the following:

1. Rails.
2. Hangers and brackets.
3. Equipment.
4. Piping.
5. Grating and floor plate.
6. Electrical and Plumbing Work.
7. Wood and plastic fabrications.
8. Partitions and ceilings.

1.2 RELATED SECTIONS

A. The Work of the following Sections apply to the Work of this Section. Other Sections, not referenced below, shall also apply to the extent required for proper performance of the Work.

1. Section 05500, Miscellaneous Metal.
2. Division 11, Equipment.

1.3 REFERENCE SPECIFICATIONS, CODES AND STANDARDS

A. The current edition of the Uniform Building Code (UBC).

B. Comply with the applicable provisions and recommendations of the following, except as otherwise shown or otherwise specified.

1. ASTM A 307 Carbon Steel Externally and Internally Threaded Standard Fasteners
2. ASTM A 320 Alloy-Steel Bolting Materials for Low-Temperature Service

C. Adhesive anchors, expansion anchors and inserts shall be UL or FM approved.

1.4 SUBMITTALS

A. Shop Drawings: Submit for approval in accordance with the requirements of Division 1 of the Specifications, the following:

1. Setting drawings and templates for location and installation of anchorage devices.
2. Copies of manufacturer's specifications, load tables, dimension diagrams and installation instructions for the devices.

B. Load and anchoring calculations signed and sealed by a California Registered Civil Engineer as specified in Paragraph 2.1. All required calculations and certifications by a California Registered Professional Engineer shall be at the CONTRACTOR's expense and shall be included with the CONTRACTOR's bid.

1.5 QUALITY ASSURANCE

Manufacturers and suppliers of the materials specified herein shall be required to review and satisfy all relevant requirements of the Contract Documents. The CONTRACTOR, manufacturer, supplier, fabricator and/or subcontractors furnishing and/or installing equipment, materials, services and specialties associated with this Section shall fully coordinate their efforts to avoid potential claims that are based on failure to review relevant Contract Documents.

PART 2 - PRODUCTS

2.1 DESIGN CRITERIA

A. When the size, length or load carrying capacity of an anchor bolt, expansion anchor, or concrete insert is not specified or not shown on the Drawings, provide the size, length and capacity required to carry the design load times a minimum safety factor of four.

B. Determine design loads as follows:

1. For equipment anchors, use the design load recommended by the manufacturer and approved by the CONSTRUCTION MANAGER.
2. For pipe hangers and supports, use one half the total weights of pipe, fittings, valves, accessories and water contained in pipe, between the hanger and support in question and adjacent hangers and supports on both sides.
3. Allowances for vibration are included in the safety factor specified above.

C. Seismic design loads shall be based on Seismic Zone 4 conditions.

2.2 MATERIALS

A. Anchor Bolts

1. Provide bolts complying with ASTM A 307, unless otherwise specified or otherwise shown.
2. In enclosed process areas, corrosive areas, outdoor areas, buried or submerged locations, provide stainless steel bolts complying with ASTM A 320, Type 316.
3. In ferric chloride storage and feed areas, and the acid waste storage and feed area, coat all 317 SS bolts after installation with vinylester, by Tnemec Company, Inc., or equal.

B. Adhesive Anchors: Unless otherwise shown or specified, all drilled, concrete or masonry anchors shall be adhesive anchors. No material substitutions will be considered unless accompanied with ICBO report verifying strength and arterial equivalency.

1. Epoxy adhesive anchors are required for drilled anchors where exposed to weather, in submerged, wet, splash, overhead, and corrosive conditions, and for anchoring handrails, pumps, mechanical equipment, and reinforcing bars. Epoxy systems shall be Sika/F1 System with Sikadur Injection Gel Epoxy or Masterbuilders Concresive Epoxy Cartridge Dispensing System and Concresive Paste LPL, or equal. Threaded rod shall be Type 316 stainless steel.
2. Unless otherwise shown, glass capsule, polyester resin adhesive anchors will be permitted in locations not specified above and shall be Hilti HVA, Molly Parabond, or equal. Threaded rod shall be galvanized steel.

C. Expansion Anchors

1. Provide Type 316 stainless steel as specified or as shown. Anchors shall be Type 316 stainless steel and of the size required for the concrete strength specified. Provide stud type (male thread) or flush type (female thread), as required.
2. Manufacturer: Provide anchors as manufactured by one of the following:

    a. Molly division of USM Corporation.
    b. Hilti, Incorporated.
    c. Or equal.

D. Concrete Inserts

1. For piping, grating and floor plate provide Type 316 stainless steel inserts. Provide those recommended by the manufacturer for the required loading.
2. Manufacturer: Provide inserts as manufactured by one of the following:

    a. ITT Grinnell.
    b. Hohmann and Barnard, Inc.
    c. Hilti, Incorporated.
    d. Or equal.

E. Power actuated fasteners and other types of bolts and fasteners not specified herein shall not be used unless approved by the CONSTRUCTION MANAGER.

PART 3 - EXECUTION

3.1 INSPECTION

A. CONTRACTOR shall examine areas and conditions under which anchor bolts, expansion anchors, adhesive anchors and concrete insert Work is to be installed, and notify the CONSTRUCTION MANAGER in writing of conditions detrimental to proper and timely completion of Work. Do not proceed with Work until unsatisfactory conditions have been corrected in a manner acceptable to the CONSTRUCTION MANAGER.

3.2 INSTALLATION

A. Drilling equipment used and installation of expansion anchors shall be in accordance with manufacturer's instructions.

B. Assure that embedded items are protected from damage and are not filled in with concrete.

C. Expansion anchors may be used for hanging or supporting pipe 2-inches diameter and smaller. Expansion anchors shall not be used for larger pipe, unless otherwise shown or approved by the CONSTRUCTION MANAGER.

D. Use concrete inserts for pipe hangers and supports for the pipe size and loading recommended by the insert manufacturer.

E. Unless otherwise shown or approved by the CONSTRUCTION MANAGER, conform to the following for expansion anchors:

1. Minimum embedment depth in concrete: 6 diameters.
2. Minimum anchor spacing on centers: 12 diameters.
3. Minimum distance to edge of concrete: 6 diameters.

Increase dimensions above if required to develop the required anchor load capacity.

F. For the adhesive anchors and adhesive material, CONTRACTOR shall comply with the manufacturer's installation instructions on the hole diameter and depth required to fully develop the tensile strength of the anchor or reinforcing bar. CONTRACTOR shall properly clean out the hole utilizing a wire brush and compressed air to remove all loose material from the hole, prior to installing adhesive capsules or material.

G. Adhesive anchor manufacturer's representative shall observe and demonstrate the proper installation procedures for the adhesive anchors and adhesive material at no additional expense to OWNER. Each installer shall be certified, in writing, by the manufacturer to be qualified to install the adhesive anchors.

3.3 CLEANING

After embedding concrete is placed, remove protection and clean bolts and inserts.

3.4 FIELD QUALITY CONTROL

A. CONTRACTOR shall employ a testing laboratory to perform field quality testing of installed anchors. The CONSTRUCTION MANAGER is to determine the level of testing which is required for the various types of expansion anchors and bolts. A minimum of 10 percent of the adhesive anchors and reinforcing bars are to be tested to 50 percent of the ultimate tensile capacity of the anchor or reinforcing bar.

B. If failure of any of the adhesive anchors or reinforcing bars occurs, CONTRACTOR will be required to pay for the costs involved in testing the remaining 90 percent.

C. CONTRACTOR shall correct improper workmanship, remove and replace, or correct as instructed by the CONSTRUCTION MANAGER, all anchors or bars found unacceptable or deficient, at no additional cost to the OWNER.

D. CONTRACTOR shall pay for all corrections and subsequent tests required to confirm the integrity of the anchor or bar.

E. The independent testing and inspection agency shall complete a report on each area. The report should summarize the observations made by the inspector and be submitted to the CONSTRUCTION MANAGER.

F. Provide access for the testing agency to places where Work is being produced so that required inspection and testing can be accomplished.

** END OF SECTION **

This page left intentionally blank.

SECTION 07900

SEALANTS AND CAULKING

PART 1 - GENERAL

1.1 WORK OF THIS SECTION

A. Scope: Furnish and install all caulking and sealant shown on the Drawings, specified herein and not specified under other sections

1. Seal all openings shown on the Drawings and at other locations requiring caulking to seal visually and against infiltration from air and water, including, but not limited to the following

a. Control joints and expansion joints in masonry and concrete construction
b. Flashing retainers
c. Isolation joints between structure and other elements
d. Joints at penetrations of walls, decks, and floors by piping and other service and equipment
e. Joints between items or equipment and other construction
f. Joints between door frames and adjacent materials, exterior and interior
g. Bedding for all door thresholds and floor-mounted hardware
h. Open joints between dissimilar materials; joints around door frames, louvers, and other penetrations in the interior or exterior walls as detailed or specified
i. Joints between foundation and interior floor slabs or exterior flatwork
j. Other joints as detailed

1.2 RELATED SECTIONS

A. The Work of the following Sections applies to the Work of this Section. Other Sections, not referenced below, shall also apply to the extent required for proper performance of this Work.

1. Division 1.
2. Section 03251, Concrete Joints
3. Section 03300, Cast-in-Place Concrete
4. Section 05503, Anchor Bolts, Adhesive Anchors, Expansion Anchors and Concrete Inserts
5. Section 09800, Protective Coating

1.3 QUALITY ASSURANCE

A. Applicator Qualifications: All caulking shall be by a sealant contractor, recognized as such, and in business for at least five years prior to this installation, employing skilled tradesmen for the Work

1.4 SUBMITTALS

A. In accordance with Division 1 of the Specifications.

B. Color Samples: Submit color chart for each type of sealant for Owner's color selection.

C. Product Data: Submit product data for each material intended for use and location of application.

D. Warranty: Submit warranty specified under Section 1.7.

1.5 DELIVERY, STORAGE, AND HANDLING

Deliver product in original, unopened containers and store in an area not subject to extreme heat or cold.

1.6 JOB CONDITIONS

A. Environmental Conditions

1. Do not apply exterior sealants during wet weather and when the outside temperature is below 40°F
2. Do not apply interior sealants when the inside temperature is below 60°F

1.7 WARRANTY

A. Furnish a five-year written warranty to replace any or all joints which failed during the warranty period at no additional cost to the OWNER.

B. Submit two copies of written guarantee agreeing to repair or replace sealants which fail to perform as airtight and watertight joints; or fail in joint adhesion, cohesion, abrasion resistance, weather resistance, extrusion resistance, migration resistance, stain resistance, or general durability; or appear to deteriorate in any other manner, not clearly specified as an inherent quality of the material by submitted manufacturer's data.

C. Warranty shall date from final acceptance of the project by the OWNER.

PART 2 - PRODUCTS

2.1 JOINT BACKING MATERIAL

A. General

1. Size joint backing material for minimum 30% compression when inserted in the joint.
2. Material shall be round rod or semicircular type

B. Manufacturers

1. Dow Chemical Company, Ethafoam
2. Sonneborn, Sonofoam
3. Schlegel Manufacturing Company, Schlegelfoam
4. Denver Foam
5. Equivalent products of other manufacturers may be accepted subject to compliance with design, function, materials, and performance of the specified items.

2.2 SEALANT MATERIAL

A. Manufacturers

1. DAP, Inc.
2. Sika Corporation
3. Pecora Corporation
4. Products Research and Chemical Corporation
5. Sonneborn Building Products
6. Tremco Manufacturing Company
7. Mameco International
8. Equivalent products of other manufacturers may be accepted subject to compliance with design, function, materials, and performance of the specified items.

B. Acceptable Materials

1. Interior and under thresholds: Latex acrylic
2. Sealant at concrete slabs: Two component self-leveling urethane
3. All other caulking: One or two component polysulfide, Type 1, Class B nonsag
4. Primer: As recommended by the sealant manufacturer
5. Plastic joint sealer, where indicated on the drawings or specified

    a. Horizontal application: Pecora "Urexpan NR-200" or equivalent
    b. Vertical application: Pecora "Dynatrol II" or equivalent

6. Sealant at foundations: Sika Corporation "Sikaflex 1a" or equivalent

2.3 BOND BREAKER TAPE

A. Polyethylene tape or other plastic tape as recommended by the sealant manufacturer to be applied to sealant contact surfaces where bond to the substrate or joint filler must be avoided for proper performance of sealant.

B. Provide self-adhesive tape where applicable.

PART 3 - EXECUTION

3.1 INSPECTION

A. Inspect all areas to receive caulking and sealant prior to application of such.

B. If any joint or space to receive caulking or sealant is not according to detail and cannot be put into proper condition to receive the work by specified methods, notify CONSTRUCTION MANAGER in writing, or assume responsibility for and rectify any unsatisfactory caulking and sealing which results.

3.2 PREPARATION

A. Preparation of Surfaces

1. Clean all surfaces in accordance with manufacturer's recommendations.
2. Mask edges if required to protect adjoining surfaces and produce a straight finish line.
3. Clean joint surfaces immediately before installation of sealant or caulking compound.

    a. Remove dirt, insecure coatings, moisture, oil, grease, form release compounds, concrete curing compound, and other substances which would interfere with bond of sealant or caulking compound.

4. Do not proceed with installation of sealant over joint surfaces which have been painted, lacquered, waterproofed, or treated with water repellent or other treatment or coating.

    a. Remove coating or treatment at joint surfaces before installing sealant

5. Etch concrete masonry joint surfaces to remove excess alkalinity unless sealant manufacturer's printed instruction indicates that alkalinity does not interfere with sealant bond and performance.

    a. Etch with 5% solution of muriatic acid, neutralize with diluted ammonia solution, rinse thoroughly with water and allow to dry before sealant installation.

B. Priming

1. If required, prime all surfaces which are to be caulked with manufacturer's recommended or standard primer after the surfaces have been prepared as specified.
2. Before use, check all primers for discoloration and dirt pick up on adjacent surfaces.

    a. If staining occurs after exposure, take adequate measures to prevent the primer from being applied over the face of adjacent porous materials by masking or other suitable measures.

C. Joint Backing

1. All joints which are to be caulked shall be of depth necessary to provide for the specified allowable thickness of sealant and also the required backing where specified.

    a. Backing shall be to extent and type as specified and needed to provide for the allowable depth of the sealant.

2. Backup materials for sealants shall be non-staining, compatible with the sealant and primer, shall be of a resilient nature and as recommended by the manufacturer of the sealant.

    a. Size and shape of the backing shall be as required by the width of the joint and/or specified.
    b. Do not use materials impregnated with oil, solvents, or bituminous materials.

3. Compress backing material a minimum of 30% when inserted in the joint

    a. Backing material for the upper portion of joints shall be round rod or semicircular in cross section with the arc in contract with the sealant.

4. Install bond breaker tape wherever required by manufacturer's recommendations to ensure that elastomeric sealants will perform properly.

3.3 APPLICATION

A. Exterior Metal Sills: Set in full bed of polysulfide sealant.

B. Thresholds: Set in full bed of acrylic sealant.

C. Caulk Joints

1. Apply sealants in continuous beads without open joints, voids, or air pockets, using a ratchet handgun or mechanical powered gun.
2. Confine sealants to joint areas with masking tape or other precautions.

    a. Apply compounds in concealed compression joints accurately so that excess compound will not extrude from joints.

3. Remove excess compound or sealant promptly as work progresses, and clean adjoining surfaces.
4. In rough surfaces or joint of uneven widths install sealant well back into joint (recess equal to width of joint, or 3/8" minimum at masonry).
5. Anti-tack agent shall be used where necessary to protect freshly applied sealant from dirt.
6. Joints shall be slightly recessed as to facilitate a painter's line.

a. All joints throughout construction shall be hand-tooled and finished

7. All work shall be done according to manufacturer's printed instructions and specifications.

D. Concrete Slab Control Joints: Pour joints full, but not overflowing

E. Workmanship

1. Employ only proven installation techniques which will ensure that sealants will be deposited in uniform, continuous ribbons without gaps or air pockets, with complete "wetting" of the joint bond surfaces equally on opposite sides.
2. Except as otherwise indicated, fill sealant rabbet to a slightly concave surface, slightly below adjoining surfaces.
3. Where horizontal joints are between a horizontal surface and a vertical surface, fill joint to form a slight cove, so that joint will not trap moisture and dirt.

F. Joint Sizes: Install sealants to depths as recommended by the sealant manufacturer but within the following general limitations

1. For normal moving joints sealed with elastomeric sealants but not subject to traffic, fill joints to a depth equal to 50% of joint width, but not more than ½" deep or less than ¼" deep.
2. For joints sealed with non-elastomeric sealants and caulking compounds, fill joints to a depth in the range of 75% to 125% of joint width.

G. Spillage

1. Do not allow sealants or compounds to overflow or spill onto adjoining surfaces or to migrate into the voids of adjoining surfaces.
2. Use masking tape or other precautionary devices to prevent staining of adjoining surfaces by either the primer/sealer or the sealant/caulking compound.
3. Remove excess and spillage of compounds promptly as the work progresses
4. Clean the adjoining surfaces by whatever means may be necessary to eliminate evidence of spillage.
5. Do not damage the adjoining surfaces or finishes.

3.4 FIELD QUALITY CONTROL

A. Where directed by the CONSTRUCTION MANAGEER, cut out and remove a total of three samples consisting of the undisturbed sealant and back-up material from the joint

1. Samples to be 6 inches in length
2. Reseal cut out areas with the same materials

3.5 CURING, PROTECTION, AND CLEANING

A. Cure sealants and caulking compounds in compliance with manufacturer's instructions and recommendations, to obtain high early bond strength, internal cohesive strength, and surface durability.

B. The installer shall advise the contractor of procedures required for the protection of sealants and caulking compounds during the construction period, so that they will be without deterioration or damage (other than normal weathering) at the time of acceptance.

C. Protect all surfaces from damage.

1. Clean soiled surfaces immediately
2. Replace with new material any damaged material which cannot be cleaned

** END OF SECTION **

This page left intentionally blank.

SECTION 09800

PROTECTIVE COATINGS

PART 1 - GENERAL

1.1 WORK OF THIS SECTION

A. The CONTRACTOR shall provide protective coatings, complete and in place, in accordance with the Contract Documents.

B. Definitions

1. The term "paint," "coatings," or "finishes" as used herein, shall include surface treatments, emulsions, enamels, paints, epoxy resins, and all other protective coatings, excepting galvanizing or anodizing, whether used as a pretreatment, primer, intermediate coat, or finish coat.
2. The term "MDFT" means minimum dry film thickness.

C. The following surfaces shall not be protective coated unless specifically indicated in other Sections or on the Drawings.

1. Concrete.
2. Stainless steel.
3. Machined surfaces.
4. Grease fittings.
5. Glass.
6. Equipment nameplates.
7. Platform gratings, stair treads, door thresholds, and other walking surfaces.
8. Plastic and fiberglass surfaces.
9. Embedded steel in concrete.
10. Factory pre-finished surfaces with baked-on enamel, porcelain, polyvinyldiene fluoride or other similar heat-applied factory finish.
11. Submerged or intermittently submerged concrete unless otherwise specified.

D. The coating system schedules summarize the surfaces to be coated, the required surface preparation, and the coating systems to be applied. Coating notes on the Drawings are used to show exceptions to the schedules, to show or extend the limits of coating systems, or to clarify or show details for application of the coating systems.

1.2 RELATED SECTIONS

A. The following section applies to the work of this Section. Other Sections of the Specifications, not referenced below, shall also apply to the extent required for proper performance of this work.

1. Division 1, General Requirements.

1.3 REFERENCE SPECIFICATIONS, CODES AND STANDARDS

A. Except as otherwise indicated, the current editions of the following apply to the Work of this Section:

1. References herein to "SSPC Specifications" or "SSPC" shall mean the published standards of SSPC, the Society for Protective Coatings.
2. References herein to "NACE" shall mean the published standards of the National Association of Corrosion Engineers.
3. References herein to ANSI/AWWA shall mean the published standards of the American Water Works Association including:

    a. ANSI/AWWA C205 Cement-Mortar Protective Lining and Coating for Steel Water Pipe B 4 in. (100mm) and Larger B Shop Applied
    b. ANSI/AWWA C209 Cold-Applied Tape Coatings for the Exterior of Special Sections, Connections, and Fittings for Steel Water Pipelines
    c. ANSI/AWWA C210 Liquid Epoxy Coating Systems for the Interior and Exterior of Steel Water Pipelines
    d. ANSI/AWWA C213 Fusion-Bonded Epoxy Coating for the Interior and Exterior of Steel Water Pipelines
    e. ANSI/AWWA C214 Tape Coating Systems for the Exterior of Steel Water Pipelines
    f. ANSI/AWWA C217 Cold-Applied Petrolatum Tape and Petroleum Wax Tape Coatings for Exterior of Special Sections, Connections, and Fittings for Buried Steel Water Pipelines

4. Federal Specifications:

    a. OSHA 1910.144 Safety Color Code for Marking Physical Hazards

5. National Sanitation Foundation NSF

    a. NSF Standard 61 for Contact with Drinking Water.

6. ASTM Standards:

    a. C-309 Liquid Membrane-Forming Compounds for Curing Concrete

7. Regulatory Agency Requirements: Coatings for surfaces in contact with raw or potable water shall impart no taste or odor to the water nor result in any organic or inorganic content in excess of the maximum contaminant level established by applicable laws or regulations including NSF Standards. All coatings shall be approved by the San Diego Air Pollution Control District. The CONTRACTOR shall revise painting systems specified herein to provide manufacturer’s regulatory agency approved coating system where required. All painting systems shall be VOC compliant.

B. The Work of this Section shall comply with the current edition of the Uniform Building Code as adopted by the City of El Centro.

C. Inspection records of shop or field-applied coatings and linings for buried or submerged items shall be submitted within 15 days after the work has been accepted.

1.4 CONTRACTOR SUBMITTALS

A. General: Submittals shall be furnished in accordance with Division 1 of the Specifications unless indicated otherwise below.

1. A copy of this specification section, with addendum updates included, and all referenced and applicable sections, with addendum updates included, with each paragraph check-marked to indicate specification compliance or marked to indicate requested deviations from specification requirements. Check marks (3) shall denote full compliance with a paragraph as a whole. If deviations from the specifications are indicated, and therefore requested by the CONTRACTOR, each deviation shall be underlined and denoted by a number in the margin to the right of the identified paragraph, referenced to a detailed written explanation of the reasons for requesting the deviation. The CONSTRUCTION MANAGER shall be the final authority for determining acceptability of requested deviations. The remaining portions of the paragraph not underlined will signify compliance on the part of the CONTRACTOR with the specifications. Failure to include a copy of the marked-up specification sections, along with justification(s) for any requested deviations to the specification requirements, with the submittal shall be sufficient cause for rejection of the entire submittal with no further consideration.

B. Submittals shall include the following information and be submitted at least 30 days before protective coating work:

1. Coating Materials List: Eight copies of a coating materials list showing the Manufacturer and the coating number, keyed to the coating systems herein. The list shall be submitted before or at the time of submittal of samples.
2. Paint Manufacturer's Information: For each coating system to be used, the following data:

    a. Paint manufacturer's data sheet for each product proposed, including statements on the suitability of the material for the intended use.
    b. List of material surfaces to be coated for each coating system.
    c. Technical and performance information that demonstrates compliance with the system performance and material requirements.
    d. Paint manufacturer's instructions and recommendations on surface preparation and application.
    e. Proposed application techniques including proof of the acceptability of the proposed technique for each coating.
    f. Colors available for each product (where applicable).
    g. Compatibility of shop and field applied coatings (where applicable).

h. Material Safety Data Sheet for each product used.

1.5 SPECIAL CORRECTION OF DEFECTS REQUIREMENTS

A. Warranty Inspection: A warranty inspection may be conducted during the eleventh month following completion of all coating and painting work. The CONTRACTOR and a representative of the coating material manufacturer shall attend this inspection. All defective work shall be repaired in accordance with these Specifications and to the satisfaction of the OWNER. The OWNER may, by written notice to the CONTRACTOR, reschedule the warranty inspection to another date within the 2-year correction period, or may cancel the warranty inspection altogether. If a warranty inspection is not held, the CONTRACTOR is not relieved of its responsibilities under the Contract Documents.

1.6 SERVICES OF MANUFACTURER

A. For submerged and severe service coating systems, the CONTRACTOR shall require the paint manufacturer to furnish the following services:

1. The manufacturer's representative shall furnish at least 6 hours of on-site instruction in the proper surface preparation, use, mixing, application and curing of the coating systems.
2. The manufacturer's representative shall personally observe the start of surface preparation, mixing, and application of the coating materials.
3. The manufacturer's representative shall provide technical support in the field to resolve field problems associated with manufacturer's products furnished under this Contract or the application thereof.

1.7 SAFETY AND HEALTH REGULATIONS

A. General: In accordance with the requirements of OSHA Safety and Health Standards for Construction (29CFR1926) and the applicable requirements of regulatory agencies having jurisdiction, as well as manufacturer’s printed instructions and appropriate technical bulletins and manuals, the CONTRACTOR shall provide and require use of personnel protective lifesaving equipment for persons working in or about the project site.

B. Head and Face Protection and Respiratory Devices: Equipment shall include protective helmets which shall be worn by all persons while in the vicinity of the Work. In addition, workers engaged in or near the work during sandblasting shall wear OSHA approved eye and face protection devices and air purifying, half-mask or mouthpiece respirators. Barrier creams shall be used on any exposed areas of skin.

C. Ventilation: Where ventilation is used to control hazardous exposure, all equipment shall be explosion-proof. Forced air ventilation shall be provided to reduce the concentration of air contaminant to a safe limit. Air circulation and exhausting of solvent vapors shall be continued until coatings have fully cured.

D. Sound Levels: Whenever the occupational noise exposure exceeds maximum allowable sound levels, the CONTRACTOR shall implement furnish and require the use of approved ear protective devices.

E. Illumination: Adequate illumination shall be provided while Work is in progress, which may include explosion-proof lights, scaffolding and electrical equipment. Whenever required by the CONSTRUCTION MANAGER, the CONTRACTOR shall provide additional illumination to cover all areas to be inspected. The level of illumination for inspection purposes shall be determined by the CONSTRUCTION MANAGER.

F. Temporary Ladders and Scaffolding: All temporary ladders and scaffolding shall conform to applicable safety requirements. They shall be erected where requested by the CONSTRUCTION MANAGER to facilitate inspection and shall be moved by the CONTRACTOR to locations as requested by the CONSTRUCTION MANAGER.

PART 2 - PRODUCTS

2.1 GENERAL

A. Suitability: Use suitable coating materials as recommended by the Manufacturer.

B. Compatibility: In any coating system only compatible materials from a single Manufacturer shall be used in the Work. Particular attention shall be directed to compatibility of primers and finish coats. If necessary, a barrier coat shall be applied between existing prime coat and subsequent field coats to ensure compatibility.

C. Containers: Coating materials shall be sealed in containers that plainly show the designated name, formula or specification number, batch number, color, date of manufacture, and name of manufacturer, all of which shall be plainly legible at the time of use.

D. Colors: All colors and shades of colors of all coats of paint shall be as indicated or selected by the CONSTRUCTION MANAGER. Each coat shall be of a slightly different shade, to facilitate inspection of surface coverage of each coat. Finish colors shall be as selected from the manufacturer's standard color samples by the CONSTRUCTION MANAGER.

E. Substitute or "Or-Equal" Products

1. To establish equality under Division 1 of the Specifications, the CONTRACTOR shall furnish satisfactory documentation from the manufacturer of the proposed substitute or equal product that the material meets the indicated requirements and is equivalent or better in the following properties:

    a. Quality.
    b. Durability.
    c. Resistance to abrasion and physical damage.

d. Life expectancy.
e. Ability to recoat in future.
f. Solids content by volume.
g. Dry film thickness per coat.
h. Compatibility with other coatings.
i. Suitability for the intended service.
j. Resistance to chemical attack.
k. Temperature limitations in service and during application.
l. Type and quality of recommended undercoats and topcoats.
m. Ease of application.
n. Ease of repairing damaged areas.
o. Stability of colors.

2. Protective Coating Materials shall be standard products produced by recognized manufacturers who are regularly engaged in production of such materials for essentially identical service conditions. Where requested, provide the CONSTRUCTION MANAGER with the names of not less than 10 successful applications of the proposed manufacturer's products which comply with these requirements.
3. The cost of all testing and analyzing proposed substitute products which may be required by the CONSTRUCTION MANAGER shall be paid by the CONTRACTOR at no additional cost to the OWNER. If a proposed substitution requires changes in the Work, bear all such costs involved and the costs of allied trades affected by the substitution at no additional cost to the OWNER.

2.2 INDUSTRIAL COATING SYSTEMS

A. Material Sources: Each of the following manufacturers is capable of supplying many of the industrial coating materials indicated herein. Where manufacturers and paint numbers are listed, it is to show the type and quality of coatings that are required. Proposed substitute materials will be considered as indicated above. All industrial coating materials shall be materials that have a record of satisfactory performance in industrial plants, manufacturing facilities, and water and wastewater treatment plants.

1. Ameron International.
2. Carboline Coatings Company.
3. Tnemec Company.
4. Or approved equal.

2.3 COLORS AND FINISHES

A. Surface treatments and finishes are shown under ”Coating Systems” below. All substrates scheduled under “Coating Systems” shall be coated whether or not shown on the Drawings or in the Coating System Schedule, unless an item is specifically scheduled as not requiring one of the coating systems described in this Section.

B. Color Selection: In general, all color coding of piping, ducts and equipment shall comply with applicable standards of ANSI A13.1 and OSHA 1910.144. Piping colors shall conform to the requirements of Section 15060, Pipe and Pipe Fittings.

C. The CONSTRUCTION MANAGER will provide final acceptance of colors based on samples applied on the job. After approval of submittals but before the CONTRACTOR starts the coating work, the CONSTRUCTION MANAGER will furnish color schedules for surfaces to be coated in accordance with this Section. The CONSTRUCTION MANAGER reserves the right to select non-standard colors for all coating systems specified within the ability of the manufacturer to produce such non-standard colors. Selection of non-standard colors shall not be cause for CONTRACTOR rejecting the CONSTRUCTION MANAGER's color selections and CONTRACTOR shall supply such colors at no additional expense to OWNER.

D. Color Pigments: Color pigments shall be pure, nonfading, applicable types to suit the substrates and service indicated. Lead content shall not exceed amount permitted by federal, state and local government laws and regulations.

2.4 COATING SYSTEMS

A. Interior and Exterior Systems

1. System No. 1 Aliphatic Polyurethane: Two component aliphatic acrylic polyurethane coating material shall provide superior color and gloss retention, resistance to splash from acid and alkaline chemicals, resistance to chemical fumes and severe weathering and with a minimum solids content of 58 percent by volume. Primer shall be a rust inhibitive two-component epoxy coating with a minimum solids content of 68 percent by volume.

    a. Prime coat DFT = 4 mils, Ameron 385, Carboline 893, Tnemec N69, or equal.
    b. Finish coat (1 or more, DFT = 3 mils), Ameron Amershield, Carboline 134 HG, Tnemec 1074, or equal.
    c. Total system DFT = 7 mils.
    d. More than one finish coat shall be applied as necessary to produce a finish with uniform color and texture.

2. System No. 2 Epoxy, Equipment and Piping: Two-component, rust inhibitive polyamide cured epoxy coating material shall provide a recoatable finish that is available in a wide selection of colors. The coating material shall have a minimum solids content of 66 percent by volume and be resistant to service conditions of condensing moisture, splash and spillage of lubricating oils, and frequent washdown and cleaning.

    a. Prime coat DFT = 3 mils, Ameron 385, Carboguard 890, Tnemec N69, or equal.
    b. Prime coat, where shop applied. (DFT = 3 mils), Ameron 185 HS, Carboguard 150, Tnemec 50 330 or 161, or equal.

c. Finish coats (2 or more, DFT = 6 mils), Ameron 385, Carboguard 890, Tnemec N69, or equal.
d. Total system DFT = 9 mils.

B. Submerged and Severe Service Coating Systems

1. Materials Sources: The manufacturers' products listed in this paragraph are materials which satisfy the material descriptions of this paragraph and have a documented successful record for long term submerged or severe service conditions. Proposed substitute products will be considered as indicated above.
2. System No. 3 Amine-Cured Epoxy: High build, amine-cured, epoxy resin shall have a solids content of at least 80% by volume, and shall be suitable for long-term immersion service in potable water. For potable water service, the coating material shall be listed by the NSF International as in compliance with NSF Standard 61 Drinking Water System Components Health Effects.

   a. Prime coat and finish coats (3 or more, DFT = 16 mils), Ameron 395, Carboguard 891, Tnemec Pota-Pox 80, or equal.
   b. For coating of valves and nonsubmerged equipment, DFT = 12 mils.

3. System No. 4 - Cold-Applied Tape: Tape coating materials and procedures shall be in accordance with ANSI/AWWA C209. The system shall consist of a primer layer, inner layer tape (35 mils), and an outer layer tape (35 mils). Total system DFT = 70 mils. Prefabricated tape shall be Type II for fittings and ANSI/AWWA C214 tape for piping.
4. System No. 5 - Polyamide-Cured Epoxy: High build, polyamide epoxy resin shall have a solids content of at least 56% by volume, and shall be suitable for long-term immersion in potable water. For potable water service, the coating material shall be listed by NSF International as in compliance with NSF Standard 61.

   a. Prime coat and finish coats (3 or more, DFT = 12 mils), Carboguard 888, Tnemec Pota-Pox 80, Ameron 83HS, or equal.

5. System No. 6 - Fusion Bonded Epoxy: The coating material shall be a 100% powder epoxy applied in accordance with the ANSI/AWWA C213 - Fusion-Bonded Epoxy Coating for the Interior and Exterior of Steel Water Pipelines, except that the surface preparation shall be as specified in the coating system schedule of this Section. The coating shall be applied using the fluidized bed process.

   a. Liquid Epoxy: For field repairs, the use of a liquid epoxy will be permitted, applied in not less than three coats to provide a DFT of 15 mils. The liquid epoxy shall be a 100 percent solids epoxy recommended by the powder epoxy manufacturer and per AWWA C210.
      (i) Coating DFT = 16 mils, Scotchkote 134 or 206N, or equal.
      (ii) Total system DFT = 16 mils.
      (iii) For coating of valves, DFT = 12 mils.

6. System No. 7 - Epoxy, Concrete: The coating material shall be an amine-cured epoxy material suitable for long-term immersion in water and for service where subjected to occasional splash and spillage of water treatment chemicals. The finish coating material shall have a minimum solids content of 80% by volume. If used for potable water service the finish coating material shall be listed by the NSF International as in compliance with NSF Standard 61, and shall conform with state and local health regulations and policies for service in potable water. The filler-sealer shall be a 100 percent solids amine-cured epoxy material with silica and inert fillers. A 100 percent solids epoxy surface shall be used to fill holes and patch the concrete surface after abrasive blasting.

    a. Prime coat (filler-sealer), applied in two coats to the entire surface using a squeegee to achieve a smooth, void-free surface, Carboguard 501, Tnemec Series 218 Mortar Clad, Ameron Nu-Klad 105A followed by Nu-Klad 114A (two coats) or equal.
    b. Finish coats (2 or more, DFT = 12 mils), Carboguard 891, Tnemec Pota-Pox 80 Ameron 395, or equal. On walking surfaces, use a nonskid additive sieve size 70-100 silica broadcast and back rolled into the final coat.

C. Special Coating Systems

1. System No. 8 - Cold-applied Petrolatum/Wax Tape Coating: Materials and procedures shall be in accordance with ANSI/AWWA C217. The system shall consist of a primer (DFT = 3 mils) and a tape layer (40 mils minimum thickness).
2. System No. 9 - Rich Portland Cement Mortar: Rich Portland cement mortar coating shall have a minimum thickness of 1/8 inch, followed by enclosure in an 8-mil thick polyethylene sheet with all joints and edges lapped and sealed with tape.
3. System No. 10 Cement Mortar Coating: Cement mortar coating materials and procedures shall conform to the requirements of ANSI/AWWA C205. A 1 1/4 inch minimum thickness mortar coating shall be provided. The mortar coating shall be reinforced with wire fabric. The cement mortar shall contain no less than one part Type V cement to three parts sand. The cement mortar shall be cured by a curing compound meeting the requirements of "Liquid Membrane Forming Compounds for Curing Concrete," ASTM C 309, Type II, white pigmented, or by enclosure in an 8 mil thick polyethylene sheet with all edges and joints lapped by at least 6 inches. Sheeting shall be removed before backfilling.
4. System No. 11 - Tape and Cement Mortar Coating: A flexible pipe dielectric coating system (polyethylene tape) and cement mortar protective overcoat (rock shield) shall be provided. Polyethylene tape requirements shall conform to the requirements of ANSI/AWWA C214. A 3/4-inch minimum thickness mortar coating (rock shield) shall be provided and shall be reinforced with welded wire fabric conforming to the requirements of ANSI/AWWA C205. Cement mortar shall conform to the requirements of ANSI/AWWA C205, and cement for mortar shall be Type V.
5. System No. 13 - Acrylic Latex Coating for Exposed PVC Piping: Exterior surfaces of PVC piping exposed to sunlight shall be completely coated with a single component, water-based acrylic latex with a fungicide additive. Exposed PVC

piping in interior, non-submerged applications shall be color-coded using a single component, water-based acrylic latex. The acrylic latex shall have a minimum solids content of 35 percent by volume. The prime coat shall be as recommended by the manufacturer. The coating material shall be available in ANSI safety colors. The system shall include a prime coat (DFT = 2 mils) as recommended by the manufacturer. The system shall include two or more finish coats (DFT = 6 mils) of Amerguard 220, Carboline 3359, Tnemec Cryl Series 6, or equal. The total system DFT = 8 mils.

2.5 COATING SYSTEM SCHEDULE

Item	Surface Prep.	System No.
All ferrous surfaces indoors and outdoors, exposed or covered, except those included below.	Commercial blast cleaning SSPC-SP6	(1) aliphatic polyurethane
Surfaces of piping and equipment and ferrous surfaces submerged or intermittently submerged in potable water and all surfaces inside enclosed hydraulic structures and vents (excluding shop-coated valves, couplings, pumps).	White metal blast cleaning SSPC-SP5	(3) amine-cured epoxy
Buried steel pipe 3-inch diameter and smaller.	Removal of dirt, grease, oil	(4) cold applied tape
Where indicated, ferrous surfaces in water passages of all valves 4-inch diameter and larger, exterior surfaces of submerged or buried valves.	White metal blast cleaning SSPC-SP5	(5) polyamide-cured epoxy
Where indicated, ferrous surfaces in water passages and submerged surfaces of all pumps which have discharge diameter of 4 inches or larger.	White metal blast cleaning SSPC-SP5	(3) amine-cured epoxy
Ferrous surfaces of sleeve-couplings and exposed piping inside buildings/vaults.	White metal blast cleaning SSPC-SP5	(6) fusion-bonded epoxy
Buried surfaces that are not indicated to be coated elsewhere.	Removal of dirt, grease, oil	(4) cold applied tape
Above-grade or below-grade concrete, submerged and non-	Per paragraph 3.7	(7) epoxy, concrete

Item	Surface Prep.	System No.
submerged		
Below-grade concrete, submerged, potable water	Per paragraph 3.7	(7) epoxy, concrete
Galvanized surfaces where indicated	Sweep blast cleaning SSPC-SP7	(2) epoxy
Buried pipe couplings, valves, and flanged joints, including epoxy-coated surfaces	As specified by reference specification	(8) petrolatum / wax tape
Buried plastic pipe couplings, valves, fittings, and flanged joints (where piping is plastic)	Removal of dirt, grease, oil	(9) rich Portland cement mortar
Buried steel pipe and fittings	As specified by reference specification	(11) tape and cement mortar (10) cement mortar
Buried ductile or cast iron pipe and fittings	As specified by manufacturer for polyurethane coating; as specified by reference specification for epoxy coatings	(12) polyurethane
Exposed PVC piping	Solvent-cleaned SSPC-SPI	(13) acrylic latex

PART 3 - EXECUTION

3.1 WORKMANSHIP

A. Skilled craftsmen and experienced supervision shall be used on all Work.

B. Coating shall be done in a workmanlike manner so as to produce an even film of uniform thickness. Edges, corners, crevices, and joints shall receive special attention to insure thorough cleaning and an adequate thickness of coating material. The finished surfaces shall be free from runs, drops, ridges, waves, laps, brush marks, and variations in color, texture, and finish. The hiding shall be so complete that the addition of another coat would not increase the hiding. Special attention shall be given to insure that edges, corners, crevices, welds, and similar areas receive a film thickness equivalent to adjacent

areas, and installations shall be protected by the use of drop cloths or other precautionary measures.

C. All damage to surfaces resulting from the Work shall be cleaned, repaired, and refinished to original condition.

3.2 STORAGE, MIXING, AND THINNING OF MATERIALS

A. Manufacturer's Recommendations: Unless otherwise indicated, the coating manufacturer's printed recommendations and instructions for thinning, mixing, handling, applying, and protecting its coating materials, for preparation of surfaces for coating, and for all other procedures relative to coating shall be strictly observed.

B. All protective coating materials shall be used within the manufacturer's recommended shelf life.

C. Storage and Mixing: Coating materials shall be stored under the conditions recommended by the Material Safety Data Sheets, and shall be thoroughly stirred, strained, and kept at a uniform consistency during application. Coatings of different manufacturers shall not be mixed together.

3.3 PREPARATION FOR COATING

A. General: All surfaces to receive protective coatings shall be cleaned as indicated before application of coatings. Examine all surfaces to be coated, and correct surface defects before application of any coating material. All marred or abraded spots on shop-primed and on factory-finished surfaces shall receive touch-up restoration before any coating application. Surfaces to be coated shall be dry and free of visible dust.

B. Protection of Surfaces Not to be Coated: Surfaces which are not to receive protective coatings shall be protected during surface preparation, cleaning, and coating operations.

C. All hardware, lighting fixtures, switchplates, machined surfaces, couplings, shafts, bearings, nameplates on machinery, and other surfaces not to be painted shall be removed, masked or otherwise protected. Drop cloths shall be provided to prevent coating materials from falling on or marring adjacent surfaces. The working parts of all mechanical and electrical equipment shall be protected from damage during surface preparation and coating operations. Openings in motors, including moisture weep holes, shall be masked to prevent entry of coating or other materials.

D. Care shall be exercised not to damage adjacent work during blast cleaning operations. Spray shall be conducted under carefully controlled conditions. The CONTRACTOR shall be fully responsible for and shall promptly repair any and all damage to adjacent work or adjoining property occurring from blast cleaning or coating operations.

E. Protection of Painted Surfaces: Cleaning and coating shall be coordinated so that dust and other contaminants from the cleaning process will not fall on wet, newly coated surfaces.

3.4 SURFACE PREPARATION STANDARDS

A. The following referenced surface preparation specifications of SSPC: The Society for Protective Coatings shall form a part of this specification:

1. Solvent Cleaning (SSPC SP1): Removal of oil, grease, soil, salts, and other soluble contaminants by cleaning with solvent, vapor, alkali, emulsion, or steam.
2. Hand Tool Cleaning (SSPC SP2): Removal of loose rust, loose mill scale, loose paint, and other loose detrimental foreign matter, by hand chipping, scraping, sanding, and wire brushing.
3. Power Tool Cleaning (SSPC SP3): Removal of loose rust, loose mill scale, loose paint, and other loose detrimental foreign matter, by power tool chipping, descaling, sanding, wire brushing, and grinding.
4. White Metal Blast Cleaning (SSPC SP5): Removal of all visible rust, oil, grease, soil, dust, mill scale, paint, oxides, corrosion products and foreign matter by blast cleaning.
5. Commercial Blast Cleaning (SSPC SP6): Removal of all visible oil, grease, soil, dust, mill scale, rust, paint, oxides, corrosion products, and other foreign matter, except that staining shall be limited to no more than 33 percent of each square inch of surface area.
6. Brush-Off Blast Cleaning (SSPC SP7): Removal of all visible oil, grease, soil, dust, loose mill scale, loose rust, and loose paint.
7. Near-White Blast Cleaning (SSPC SP10): Removal of all visible oil, grease, soil, dust, mill scale, rust, paint, oxides, corrosion products, and other foreign matter, except that staining shall be limited to no more than 5 percent of each square inch of surface area.
8. Surface Preparation of Concrete (SSPC-SP13): Concrete surface shall be free of contaminants, laitance, loosely adhering concrete and dust, and should provide a sound, uniform substrate suitable for the application of protective coating or lining systems.

3.5 METAL SURFACE PREPARATION (UNGALVANIZED)

A. The minimum abrasive blasting surface preparation shall be as indicated in the coating system schedules included at the end of this Section. Where there is a conflict between these Specifications and the coating manufacturer's printed recommendations for the intended service, the higher degree of cleaning shall apply.

B. Workmanship for metal surface preparation shall be in conformance with the current SSPC Standards and this Section. Blast cleaned surfaces shall match the standard samples available from the National Association of Corrosion Engineers, NACE Standard TM 01 70 Visual Standard for Surfaces of New Steel Airblast Cleaned with Sand Abrasive and TM 01 75 Visual Standard for Surfaces of New Steel Centrifugally Blast Cleaned with Steel Grit.

C. All oil, grease, welding fluxes, and other surface contaminants shall be removed by solvent cleaning per SSPC SP1 Solvent Cleaning before blast cleaning.

D. All sharp edges shall be rounded or chamfered and all burrs, and surface defects and weld splatter shall be ground smooth before blast cleaning.

E. The type and size of abrasive shall be selected to produce a surface profile that meets the coating manufacturer's recommendation for the particular coating and service conditions. Abrasives for submerged and severe service coating systems shall be clean, hard, sharp cutting crushed slag. Automated blasting systems shall not be used for surfaces that will be in submerged service. Metal shot or grit shall not be used for surfaces that will be in submerged service, even if subsequent abrasive blasting is planned to be one with hard, sharp cutting crushed slag.

F. The abrasive shall not be reused unless an automated blasting system is used for surfaces that will be in nonsubmerged service. For automated blasting systems, clean oil-free abrasives shall be maintained. The abrasive mix shall include at least 50 percent grit.

G. Comply with the applicable federal, state, and local air pollution control regulations for blast cleaning.

H. Compressed air for air blast cleaning shall be supplied at adequate pressure from well-maintained compressors equipped with oil and moisture separators which remove at least 95% of the contaminants.

I. Surfaces shall be cleaned of all dust and residual particles of the cleaning operation by dry air blast cleaning, vacuuming, or another approved method before painting.

J. Enclosed areas and other areas where dust settling is a problem shall be vacuum cleaned and wiped with a tack cloth.

K. Damaged or defective coating shall be removed by the specified blast cleaning to meet the clean surface requirements before recoating.

L. If the specified abrasive blast cleaning will damage adjacent work, the area to be cleaned is less than 100 square feet, and the coated surface will not be submerged in service, then SSPC SP2 Hand Tool Cleaning or SSPC SP3 Power Tool Cleaning, may be used.

M. Shop-applied coatings of unknown composition shall be completely removed before the indicated coatings are applied. Valves, castings, ductile or cast iron pipe, and fabricated pipe or equipment shall be examined for the presence of shop-applied temporary coatings. Temporary coatings shall be completely removed by solvent cleaning per SSPC SP1 before the abrasive blast cleaning work has been started.

N. Shop primed equipment shall be solvent cleaned in the field before finish coats are applied.

3.6 SURFACE PREPARATION FOR GALVANIZED FERROUS METAL

A. Galvanized ferrous metal shall be alkaline cleaned per SSPC SP1 to remove oil, grease, and other contaminants detrimental to adhesion of the protective coating system to be used.

B. Pretreatment coatings of surfaces shall be in accordance with the printed recommendations of the coating manufacturer.

3.7 SURFACE PREPARATION FOR CONCRETE SURFACES

A. Prepare surfaces of concrete to be painted by removing all efflorescence, chalk, dust, dirt, grease, oils, with soap and water.

B. Determine the alkalinity and moisture content of the surfaces to be painted by performing appropriate tests in accordance with SSPC-SP13. If the surfaces are found to be sufficiently alkaline to cause blistering and burning of the finish paint, correct this condition before application of paint in accordance with the coating manufacturer's recommendations. Provide suitable testing materials and carry out alkalinity and moisture tests.

C. Do not paint over surfaces where the moisture content exceeds 8%, unless otherwise permitted in the manufacturer's printed directions.

D. Surface preparation and acceptance criteria shall be in accordance with methods described in SSPC-SP13, except acid etching and flame cleaning will not be permitted.

3.8 SHOP COATING REQUIREMENTS

A. Unless otherwise indicated, all items of equipment, or parts of equipment which are not submerged or buried in service, shall be shop primed and then finish coated in the field after installation with the indicated or selected color. The methods, materials, application equipment and all other details of shop painting shall comply with this Section. If the shop primer requires topcoating within a specified period of time, the equipment shall be finish coated in the shop and then touchup painted after installation.

B. All items of equipment or parts and surfaces of equipment which are submerged or inside an enclosed hydraulic structure when in service, with the exception of pumps and valves, shall have all surface preparation and coating work performed in the field.

C. The interior surfaces of steel water reservoirs, except for Part A surfaces, shall have all surface preparation and coating work performed in the field.

D. For certain pieces of equipment, it may be undesirable or impractical to apply finish coatings in the field. Such equipment may include engine generator sets, equipment such as electrical control panels, switchgear or main control boards, submerged parts of pumps, ferrous metal passages in valves, or other items where it is not possible to obtain the indicated quality in the field. Such equipment shall be primed and finish coated in the

shop and touched up in the field with the identical material after installation. The CONTRACTOR shall require the manufacturer of each such piece of equipment to certify as part of its shop drawings that the surface preparation is in accordance with these Specifications. The coating material data sheet shall be submitted with the shop drawings for the equipment.

3.9 APPLICATION OF COATINGS

A. The application of protective coatings to steel substrates shall be in accordance with SSPC-PA1 - Paint Application Specification No. 1.

B. Cleaned surfaces and all coats shall be inspected before each succeeding coat. Schedule such inspection with the CONSTRUCTION MANAGER in advance.

C. Blast cleaned ferrous metal surfaces shall be painted before any rusting or other deterioration of the surface occurs. Blast cleaning shall be limited to only those surfaces that can be coated in the same working day.

D. Coatings shall be applied in accordance with the manufacturer's instructions and recommendations, and this Section, whichever has the most stringent requirements.

E. Special attention shall be given to edges, angles, weld seams, flanges, nuts and bolts, and other places where insufficient film thicknesses are likely to be present. Use stripe painting for these areas.

F. Special attention shall be given to materials which will be joined so closely that proper surface preparation and application are not possible. Such contact surfaces shall be coated before assembly or installation.

G. Finish coats, including touch-up and damage repair coats shall be applied in a manner which will present a uniform texture and color matched appearance.

H. Coatings shall not be applied under the following conditions:

1. Temperature exceeding the manufacturer's recommended maximum and minimum allowable.
2. Dust or smoke laden atmosphere.
3. Damp or humid weather.
4. When the substrate or air temperature is less than 5 degrees F above dewpoint.
5. When air temperature is expected to drop below 40 degrees F or less than 5 degrees F above the dewpoint within 8 hours after application of coating.
6. When wind conditions are not calm.

I. Dewpoint shall be determined by use of a sling psychrometer in conjunction with U.S. Department of Commerce, Weather Bureau psychometric tables.

J. Unburied steel piping shall be abrasive blast cleaned and primed before installation.

3.10 CURING OF COATINGS

A. Maintain curing conditions in accordance with the conditions recommended by the coating material manufacturer or by this Section, whichever is the most stringent, before placing the completed coating system into service.

B. In the case of enclosed areas, forced air ventilation, using heated air if necessary, may be required until the coatings have fully cured.

3.11 SHOP AND FIELD INSPECTION AND TESTING

A. General: Furnish the CONSTRUCTION MANAGER a minimum of 3 days' advance notice of the start of any field surface preparation work or coating application work, and a minimum of 7 days' advance notice of the start of any shop surface preparation work.

B. All inspection, testing, and operation of inspection tools for field-applied coatings and linings shall be performed only in the presence of the CONSTRUCTION MANAGER, unless the CONSTRUCTION MANAGER has granted prior approval to perform such Work in its absence. NACE Level III Coating Inspectors shall be provided for all coatings in immersion service, as directed by the CONSTRUCTION MANAGER.

C. Inspection by the CONSTRUCTION MANAGER, or the waiver of inspection of any particular portion of the Work, shall not relieve the CONTRACTOR of its responsibility to perform the Work in accordance with these Specifications.

D. For external or internal application of lining or coating materials for buried or submerged piping systems, the CONTRACTOR shall supply inspection procedures for use by the CONSTRUCTION MANAGER. Procedures shall be supplied in advance of starting work.

E. Inspection Devices: Furnish, until final acceptance of such coatings, inspection devices in good working condition for the detection of holidays and measurement of dry-film thicknesses of protective coatings. Dry-film thickness gauges shall be made available for the CONSTRUCTION MANAGER's use at all times while coating is being done, until final acceptance of such coatings. Furnish the services of a trained operator of the holiday detection devices until the final acceptance of such coatings. Holiday detection devices shall be operated only in the presence of the CONSTRUCTION MANAGER by NACE Level III Coating Inspectors, as determined to be necessary by the CONSTRUCTION MANAGER.

F. Holiday Testing: Holiday test all coated ferrous surfaces inside a steel reservoir, other surfaces which will be submerged in water or other liquids, or surfaces which are enclosed in a vapor space in such structures and surfaces coated with any of the submerged and severe service coating systems. Areas which contain holidays shall be marked and repaired or recoated in accordance with the coating manufacturer's printed instructions and then retested. Electrical inspection for linings and coatings shall be in accordance with applicable NACE standards RPO 188 and/or RPS 274.

1. Coatings with Thickness Exceeding 20 Mils: For surfaces having a total dry film coating thickness exceeding 20 mils: pulse-type holiday detector such as Tinker & Rasor Model AP W, D.E. Stearns Co. Model 14/20, or equal shall be used. The unit shall be adjusted to operate at the voltage required to cause a spark jump across an air gap equal to twice the specified coating thickness.
2. Coatings with Thickness of 20 Mils or Less: For surfaces having a total dry film coating thickness of 20 mils or less: Tinker & Rasor Model M1 nondestructive type holiday detector, K D Bird Dog, or equal shall be used. The unit shall operate at less than 75 V. For thicknesses between 10 and 20 mils, a nonsudsing type wetting agent, such as Kodak Photo Flo, or equal, shall be added to the water before wetting the detector sponge.

G. Film Thickness Testing: On ferrous metals, the dry film coating thickness shall be measured in accordance with the SSPC "Paint Application Specification No. 2" using a magnetic-type dry film thickness gauge such as Mikrotest model FM, Elcometer model 111/1EZ, or equal. Each coat shall be tested for the correct thickness. No measurements shall be made until at least 8 hours after application of the coating. On nonferrous metals and other substrates, the coating thicknesses shall be measured at the time of application using a wet film gauge.

H. Surface Preparation: Evaluation of blast cleaned surface preparation work will be based upon comparison of the blasted surfaces with the standard samples available from the NACE, using NACE standards TM 01 70 and TM 01 75.

3.12 PROTECTION

A. Protect work of other trades, whether to be painted or not, against damage by the painting and finishing Work. Leave all such work undamaged. Correct all damages by cleaning, repairing or replacing, and repainting, as acceptable to the CONSTRUCTION MANAGER.

B. Provide “Wet Paint” signs as required to protect newly painted finishes. Remove all temporary protective wrappings provided for protection of this Contract and other contracts after completion of painting operations.

3.13 CLEAN-UP

A. During the progress of Work, remove from the site all discarded paint materials, rubbish, cans and rags at the end of each work day.

B. Upon completion of painting Work, clean window glass and all other paint-spattered surfaces. Remove spattered paint by proper methods of washing and scraping, using care not to scratch or otherwise damage finished surfaces.

C. At the completion of Work of other trades, touch up and restore all damaged or defaced painted surfaces as determined by the CONSTRUCTION MANAGER.

** END OF SECTION **

This page left intentionally blank.

SECTION 10441

WARNING SIGNS

PART 1 - GENERAL

1.1 WORK OF THIS SECTION

This section specifies informational and accident prevention signs.

1.2 OPERATING AND DESIGN REQUIREMENTS

A. General: Accident prevention signs shall conform as to design with OSHA Section 1910.145 of Subpart J, Part 1910, Chapter XVII, Title 29 of the Code of Federal Regulations. Exit signs shall conform with Section 1910.37(g) of the OSHA Safety and Health Standard for General Industry, Article 10, Section 10.113 of the Uniform Fire Code, and where applicable with local fire regulations.

B. Design Requirements

1. Size: Sign size shall be as follows:

   A – 14-inch x 20-inch
   B – 10-inch x 14-inch
   C – 7-inch x 10-inch

2. Languages: English and Spanish
3. Type

   a. The English sign type shall be as follows:

Type	Message
I	CAUTION--AUTOMATIC EQUIPMENT MAY START AT ANY TIME
II	DANGER--480 VOLTS
III	CAUTION--CORROSIVE CHEMICALS
IV	NOTICE--NON-POTABLE WATER--DO NOT DRINK
V	NO SMOKING
VI	EMERGENCY EYEWASH AND SAFETY SHOWER
VII	DANGER--KEEP OUT
VIII	DANGER--HIGH VOLTAGE
IX	DANGER--CONFINED SPACE ENTRY
X	DANGER--CONFINED SPACE--HAZARDOUS ATMOSPHERE
XI	EAR PROTECTION REQUIRED BEYOND THIS POINT
XII	CAUTION--HIGH TEMPERATURE
XIII	RESTRICTED AREA-AUTHORIZED PERSONNEL ONLY

Type	Message
XIV	RADIATION HAZARD
XV	HARD HAT AREA
XVI	LOCK OUT SWITCH BEFORE WORKING ON EQUIPMENT
XVII	NO SWIMMING
XVIII	CAUTION--____-FOOT VERTICAL DROP
XIX	CAUTION--AUTOMATIC DOOR
XX	DO NOT STARE AT WELDING FLAME
XXI	CAUTION--PROTECTIVE GEAR REQUIRED WHILE SERVICING
XXII	CAUTION--MOVING MACHINERY
XXIII	TRIP MAIN BREAKER INSIDE BUILDING PRIOR TO WORKING ON TRANSFORMER
XXIV	EXIT

b. The Spanish sign type shall be as follows:

Type	Message
I	PRECAUCION--EQUIPO AUTOMATICO PUEDE PONERSE EN MARCHA EN CUALQUIER HORA
II	PELIGRO--480 VOLTIOS
III	PRECAUCION--QUIMICOS CORROSIVOS
IV	ADVERTENCIA--AGUA NO POTABLE--NO BEBER
V	NO FUMAR
VI	REGADERA DE EMERGENCIA Y LAVABO DE OJOS
VII	PELIGRO--ALEJESE
VIII	PELIGRO--ALTO VOLTAJE
IX	PELIGRO--ENTRADA ESTRECHA
X	PELIGRO--ESPACIO REDUCIDO--ATMOSFERA PELIGROSA
XI	PROTECCION DE OIDOS REQUERIDA DESPUES DE ESTE PUNTO
XII	PRECAUCION--TEMPERATURA ALTA
XIII	AREA RESTRINGIDA--SOLO PERSONAL AUTORIZADO
XIV	RADIACION PELIGROSA
XV	AREA DE CASCOS
XVI	PONER CANDADO AL INTERRUPTOR ANTES DE TRABAJAR EN EL EQUIPO
XVII	PROHIBIDO NADAR
XVIII	PRECAUCION--CAIDA VERTICAL DE ____-PIEZ
XIX	PRECAUCION--PUERTA AUTOMATICA
XX	NO SE LE QUEDE MIRANDO A LA LLAMA DE SOLDAR
XXI	PRECAUCION--EQUIPO DE PROTECCION ES REQUERIDO MIENTRAS TRABAJA
XXII	PRECAUCION--MAQUINARIA EN MOVIMIENTO

Type	Message
XXIII	APAGAR EL INTERRUPTOR PRINCIPAL ADENTRO DEL EDIFICIO ANTES DE TRABAJAR EN EL TRANSFORMADOR
XXIV	SALIDA

PART 2 - PRODUCTS

2.1 GENERAL

Sign lettering shall be single stroke and shall contrast in color with the background. For those messages for which there are international symbols, the international symbols shall be used. Chain mounted signs shall have lettering on both sides.

2.2 MATERIALS

Signs shall be 0.100-inch thick fiberglass with embedded fade-proof legends.

PART 3 - EXECUTION

3.1 LOCATION

A. Signs shall be placed next to the equipment and distributed as follows:

Type	Message
I	CAUTION--AUTOMATIC EQUIPMENT MAY START AT ANY TIME
V	NO SMOKING
VIII	DANGER--HIGH VOLTAGE
XIII	RESTRICTED AREA-AUTHORIZED PERSONNEL ONLY
XVI	LOCK OUT SWITCH BEFORE WORKING ON EQUIPMENT

** END OF SECTION **

This page left intentionally blank.

SECTION 11000

EQUIPMENT GENERAL PROVISIONS

PART 1 - GENERAL

1.1 WORK OF THIS SECTION

A. The DESIGN-BUILDER shall provide all tools, supplies, materials, equipment, and all labor necessary for the furnishing, construction, installation, testing, and operation of all equipment and appurtenant Work, complete and operable, in accordance with the Contract Documents.

B. The provisions of this Section shall apply to all equipment specified under this Contract and where referred to, except where otherwise indicated.

C. Unless Otherwise Noted: Pumps, electric motors, compressors, and similar equipment and all outdoor equipment shall be designed, or modified, to operate satisfactory for the following conditions:

1. Outside ambient air conditions: Outdoor daily range (min. to max.): 0-120 degrees F.

1.2 RELATED SECTIONS

A. The Work of the following Sections applies to the Work of this Section. Other Sections, not referenced below, shall also apply to the extent required for proper performance of this Work.

1. Section 05500, Miscellaneous Metals.
2. Section 09800, Protective Coatings.

1.3 REFERENCE SPECIFICATIONS AND STANDARDS

A. Commercial Standards: All equipment, products, and their installation shall be in accordance with the following standards, as applicable, and as indicated in each Section:

1. American Society for Testing and Materials (ASTM).
2. American Public Health Association (APHA).
3. American National Standards Institute (ANSI).
4. American Society of Mechanical Engineers (ASME).
5. American Water Works Association (AWWA).
6. American Society of Heating, Refrigerating, and Air Conditioning Engineers (ASHRAE).
7. American Welding Society (AWS).
8. American Gear Manufacturers Association (AGMA).
9. American Iron and Steel Institute (AISI).

10. National Fire Protection Association (NFPA).
11. Federal Specifications (FS).
12. National Electrical Manufacturers Association (NEMA).
13. Antifriction Bearing Manufacturers Association (AFBMA).
14. Mechanical Power Transmission Association (MPTA).
15. Rubber Manufacturers Association (RMA).
16. Sheet Metal and Air Conditioning Contractor's National Association (SMACNA).
17. Hydraulic Institute Standards (HYI).
18. Institute of Electrical and Electronic Engineers (IEEE).
19. Instrument Society of America (ISA).
20. Manufacturer's published recommendations and specifications.
21. General Industry Safety Orders (CAL OSHA).

B. The following standards have been referred to in this Section:

1.	ANSI B16.1	Cast Iron Pipe Flanges and Flanged Fittings Class 25, 125, 250, and 800
2.	ANSI B16.5	Pipe Flanges and Flanged Fittings, NPS through NPS 24
3.	ANSI B46.1	Surface Texture (Surface Roughness, Waviness, and Lay)
4.	ANSI S12.6	Methods for Measuring the Real-Ear Attenuation of Hearing Protectors
5.	ANSI/ASME B1.20.1	General Purpose Pipe Threads (Inch)
6.	ANSI/ASME B31.1	Power Piping
7.	ANSI/AWWA D100	Welded Steel Tanks for Water Storage
8.	AWWA C206	Field Welding of Steel Water Pipe
9.	ASTM A 48	Specification for Gray Iron Castings
10.	ASTM A 108	Specification for Steel Bars, Carbon, Cold-Finished, Standard Quality

1.4 CODES

A. The Work of this Section shall comply with the current editions of the following codes as adopted by the authority having jurisdiction over the Work:

1. Uniform Mechanical Code.
2. Uniform Plumbing Code.
3. Uniform Fire Code.
4. National Electrical Code.
5. Uniform Building Code.

1.5 SUBMITTALS

A. Shop Drawings: The DESIGN-BUILDER shall furnish complete shop drawings for all equipment specified in other Sections, together with all materials, fabrication, assembly, foundation, and installation drawings in accordance with Division 1 of the Specifications.

B. Tools: The DESIGN-BUILDER shall obtain from the manufacturer a list of special wrenches and other special tools necessary for the assembly, adjustment, and dismantling

of the equipment. All tools shall be of best quality hardened steel forgings with bright finish. Wrench heads shall have work faces dressed to fit nuts. All tools shall be suitable for professional work and manufactured by a recognized supplier of professional tools such as Snap On, Crescent, Stanley, or equal. After approval, DESIGN-BUILDER shall furnish such tools neatly mounted in a labeled toolbox of suitable design provided with a hinged cover.

C. Spare Parts: In accordance with Division 1 of the Specifications, the DESIGN-BUILDER shall obtain from the manufacturer and submit to the OWNER REPRESENTATIVE a list of suggested spare parts for each piece of equipment. After approval, the DESIGN-BUILDER shall furnish such spare parts suitably packaged, identified with the equipment number, and labeled. DESIGN-BUILDER shall also furnish the name, address, and telephone number of the nearest distributor for each piece of equipment. All spare parts are intended for use by the OWNER, only, after expiration of the correction period.

D. Operation and Maintenance Information: The DESIGN-BUILDER shall submit operations and maintenance information for each piece of equipment. The following shall be included in compliance with Division 1 of the Specifications:

1. Manufacturer's catalog including installation instructions.
2. Manufacturer's operating and maintenance procedures including lubricating instructions.
3. Manufacturer's certification that products comply with the indicated requirements.
4. Certification that products have been factory-tested.
5. Certification that the equipment has been field-tested and the equipment complies with the indicated requirements.
6. Equipment tolerances and required clearances.
7. Electrical data including control and wiring diagrams.
8. Warranty information, address and telephone number of local service representative.

E. Torsional Analysis: The DESIGN-BUILDER shall submit to the OWNER REPRESENTATIVE a torsional and lateral vibration analysis of the following equipment, in accordance with Division 1 of the Specifications. The analysis must be performed by a State of California Registered Professional Mechanical Engineer experienced in this type of Work and approved in advance by the OWNER REPRESENTATIVE.

1. All engine drives.
2. All blowers and compressors with drives of 100 horsepower and over.
3. All vertical pumps with universal joints and extended shafts.
4. All synchronous motor driven trains.
5. All electric motor with variable frequency drive (VFD) trains.
6. All other equipment where indicated.

Excitation of the following frequencies shall be evaluated:

1. Train with gear 1 and 2 x RPM of either shaft

2. Engine drive n x RPM
3. Synchronous motor n x slip frequency, 1 and 2 x line frequency
4. VFD n x RPM, 1 and 2 line frequency

where:
RPM = Rotor speed
n = an integer determined by the drive manufacturer
- for engines: derived from the number of power strokes per revolution
- for motors: derived from the number of poles

Note: The excitation frequencies for motor drives shall include transient and steady state conditions.

F. The undamped torsional natural frequencies of the complete train shall be at least 10 percent above or 10 percent below any possible (steady state) excitation frequency within the specified operating speed range (from minimum to maximum continuous speed). The manufacturer shall furnish a detailed report of the analysis including the following:

1. A description of the method used to calculate the natural frequencies.
2. A diagram of the mass elastic system.
3. A table of the mass moment and torsional stiffness of each element of the mass elastic system.
4. A Campbell diagram.
5. A mode shape diagram with peak stresses shown for each resonant frequency.

G. Vibration Analysis: In his bid price the DESIGN-BUILDER shall include at least two site visits of the abovementioned specialist, during construction and testing of the equipment, to analyze and measure the amount of equipment vibration and make his written recommendation for keeping the vibration at a safe limit.

H. Earthquake Design and Restraint: All manufactured equipment supplied under this contract shall be designed, constructed and attached to resist stresses produced by seismic forces specified in this Section. Equipment that does not vibrate during normal operation shall be rigidly attached. Equipment that vibrates during normal operation shall be attached by means of isolators with mechanical stops that limit movement in all directions, unless it can be demonstrated by calculations that such stops are not required. Equipment or portions of equipment that move during normal operation shall be restrained with mechanical devices that prevent displacement unless it can be demonstrated by calculations that such restraints are not required.

1. Work Included: The requirements specified in this Article apply to all machinery, mechanical and electrical equipment, instrumentation panels, and electrical panels, including but not limited to:

a. All pumps.
b. All compressors.
c. All tanks.

d. Engine generators.
e. Heat exchangers.
f. Water treatment systems
g. HVAC equipment.
h. Engine cooling equipment.
i. All electrical equipment and panels, including battery racks.
j. All instrumentation panels.

2. Minimum Earthquake Forces: Except as provided herein, the minimum design earthquake forces shall be those prescribed for Essential Facilities by the latest edition of the California Building Code.
3. Submit shop drawings, details and data required in this Section.

1.6 QUALITY ASSURANCE

A. Inspection, Startup, and Field Adjustment: The DESIGN-BUILDER shall demonstrate that all equipment meets the specified performance requirements. CONTRACTOR shall provide the services of an experienced, competent, and authorized service representative of the manufacturer of each item of major equipment who shall visit the site to perform the following tasks:

1. Assist the CONTRACTOR in the installation of the equipment.
2. To inspect, check, adjust if necessary and approve the equipment installation.
3. To start-up and field-test the equipment for proper operation, efficiency, and capacity.
4. To perform necessary field adjustments during the test period until the equipment installation and operation are satisfactory to the OWNER REPRESENTATIVE.
5. To instruct the OWNER's personnel in the operation and maintenance of the equipment. Instruction shall include step-by-step trouble shooting procedures with all necessary test equipment.

B. Costs: The costs of all inspection, startup, testing, adjustment, and instruction Work performed by said factory-trained representatives shall be paid for by the DESIGN-BUILDER at no additional cost to the OWNER. The OWNER will pay for costs of power and water. When available, the OWNER's operating personnel will provide assistance for field testing and startup.

C. Tolerances: Tolerances and clearances shall be as shown on the shop drawings and shall be closely adhered to. Machine Work shall in all cases be of high-grade workmanship and finish, with consideration to the special nature or function of the parts. Members without milled ends and which are to be framed to other steel parts of the structure may have a variation in the detailed length of not greater than 1/16-inch for members 30 feet or less in length, and not greater than 1/8-inch for members over 30 feet in length.

D. Machine Finish: The type of finish shall be the most suitable for the application and shall be shown in micro-inches in accordance with ANSI B46.1. The following finishes shall be used:

1. Surface roughness not greater than 63 micro-inches shall be required for all surfaces in sliding contact.
2. Surface roughness not greater than 250 micro-inches shall be required for surfaces in contact where a tight joint is not required.
3. Surface roughness not greater than 500 micro-inches shall be required for other machined surfaces.
4. Contact surfaces of shafts and stems which pass through stuffing boxes and contact surfaces of bearings shall be finished to not greater than 32 micro-inches.

E. Manufacturer's Experience: Unless otherwise directed by the OWNER REPRESENTATIVE, all equipment furnished from each manufacturer shall have a record of at least 5 years of successful, trouble free operation in similar applications of similar equipment from the same manufacturer.

F. Warranty: Unless otherwise specified, all equipment shall have a minimum one year full parts and service warranty from the date of installation and acceptance in the Work.

1.7 TOOLS AND SPARE PARTS

A. All special tools and the manufacturer's standard set of spare parts required for the normal operation and maintenance of respective items of equipment in Divisions 2, 3, 9, 11, 13, 15, and 16 shall be furnished with those items of equipment by the manufacturer. This includes special tools, instruments, accessories required for proper "in-plant" adjustment, maintenance, overhaul, and operation. Tools shall be high-grade, smooth, forged, alloy tool steel.

B. Special tools are considered to be those tools, which because of their limited use are not normally available, but which are necessary for the particular equipment, whether they are identified in the manufacturer's standard manual or not.

C. All spare parts shall be carefully packed in cartons and all tools packed in metal tool boxes with locking clasps, each labeled with indelible markings, and shall be adequately treated for a long period of storage. Complete ordering information including manufacturer's name and address, part ordering information including manufacturer, part number, part name, and equipment name and number(s) for which the part is to be used shall be supplied with the required spare parts. The tools and spare parts shall be delivered and stored in a location directed by the OWNER REPRESENTATIVE no later than 30 days prior to scheduled field testing. A list of spare parts shall be placed in each storage container respectively, and a duplicate list shall be included with the operations and maintenance manuals.

D. Additional and specific spare parts and tools for certain equipment provided have been specified in the pertinent Sections of the Specifications. The DESIGN-BUILDER shall collect and store all spare parts so required in an area to be designated by the OWNER REPRESENTATIVE. In addition, the DESIGN-BUILDER shall furnish to the OWNER REPRESENTATIVE an inventory listing all spare parts, the equipment they are associated with, the name and address of the supplier, and the delivered cost of each item.

Copies of the actual invoice for each item shall be furnished with inventory to substantiate the delivery.

E. Special tools and spare parts shall be new and shall not be utilized by the DESIGN-BUILDER. The DESIGN-BUILDER shall replace any special tools or spare parts used in the construction, testing, or warranty service provided during the term of this Contract at no additional cost to the OWNER.

PART 2 - PRODUCTS

2.1 GENERAL REQUIREMENTS

A. These Specifications call attention to certain features, but do not purport to cover all details of construction of the units. However, the DESIGN-BUILDER shall furnish and install the mechanisms and/or systems complete in all details and ready for operation when external connections are made. Where components standard with the manufacturer are not specifically mentioned, such components shall be provided and incorporated in the work as if they had been completely described or detailed, at no additional expense to the OWNER.

B. The structural drawings show the primary structure and its framing members. Where materials or equipment not part of the primary structure are to be supported by it, and where the method of attachment is not shown or specified elsewhere, the DESIGN-BUILDER shall provide all members and connection details necessary to transfer the loads of the materials and equipment to the primary structural frame. Subframing necessary for this purpose shall be designed by a Civil or Structural Engineer registered in California, and shall be adequate for all loads caused by the weight and operation of the equipment and other loads required by the Codes used for the design of the structure involved. The designer shall provide the OWNER REPRESENTATIVE with the design and calculations, and shall specifically reference the resulting loads to be transferred at each connection to the primary frame. Where connections are made to roof framing, penetrations of the waterproof roof covering shall be kept to a minimum, and the steel decking shall not be used to support the loads. The framing provided will be rejected if the OWNER REPRESENTATIVE determines that it will in any way damage any members of the primary structural frame or any other elements of the building or structure.

C. All steel members used in the fabrication of the equipment shall conform to the requirements of "Specifications for Structural Steel", ASTM A36.

D. Fabrication of structural steel members shall be in accordance with the latest edition of AISC "Specifications for the Design, Fabrication, and Erection of Structural Steel for Buildings". Zinc Coating (hot dip) for Steel Shapes, Bars, Plates and Strip shall be in accordance with the latest edition of ASTM A123. Zinc Coating (hot dip) for Iron and Steel Hardware shall be in accordance with the latest edition of ASTM A153. All welding shall conform to the latest standards of the American Welding Society.

E. All parts shall be amply proportioned for all stresses that may occur during fabrication, erection, and operation. All parts of the same size and type shall be identical.

F. Manufacturers: Products shall be new, of current manufacture, and shall be the products of reputable manufacturers specializing in the manufacture of such products.

G. Products: Materials shall be suitable for the intended purpose and free of defects and shall be recommended by the manufacturer for the application indicated.

H. High Noise Level Locations: The DESIGN-BUILDER shall provide one personal hearing protection station, as indicated herein, at each high noise level location. Said locations are defined as follows:

1. Outdoor Location: Any single equipment item or any group of equipment items that produce noise exceeding OSHA noise level requirements for a 2-hour exposure. Where such equipment is separated by a distance of more than 20-feet, measured between edges of footings, each group of equipment shall be provided with a separate hearing protection station.
2. Indoor Location

    a. Any single equipment item, or any group of equipment items, located within a single room not normally occupied, which produces noise exceeding OSHA noise level requirements for a 2-hour exposure.
    b. Any single equipment item, or any group of equipment items, located within a single room normally occupied by workers, which produces noise exceeding OSHA noise level requirements for an 8-hour exposure.

3. Personal Hearing Protection Station: At each station, the DESIGN-BUILDER shall supply, in their original unopened packaging, three pairs of high attenuation hearing protectors. The ear protectors shall be capable of meeting the requirements of ANSI S12.6 and shall produce a noise level reduction of 25-dBA at a frequency of 500-Hz. The hearing protectors shall have fluid filled ear cushions and an adjustable, padded headband. The protectors shall be stored in a weatherproof, labeled, steel cabinet, furnished by the DESIGN-BUILDER and mounted in an approved location near the noise protection station.

I. Service Factors: Service factors shall be applied in the selection or design of mechanical power transmission components. Unless otherwise calculated, the minimum service factor shall be 1.25. Unless otherwise indicated, the following load classifications shall apply in calculating service factors:

Type of Equipment	Load Classification
Pump:	
Centrifugal or Rotary	Uniform
Reciprocating	Moderate Shock
Fan/Blower	Moderate Shock

Crane or Hoist	Moderate Shock

J. Welding: Unless otherwise indicated, all welding shall conform to the following:

1. Latest revision of ANSI/AWWA D100.
2. Latest revision of AWWA C206.
3. All composite fabricated steel assemblies which are to be erected or installed inside a hydraulic structure, including any fixed or movable structural components of mechanical equipment, shall have continuous seal welds to prevent entrance of air or moisture.
4. All welding shall be by the metal-arc method or gas-shielded arc method as described in the American Welding Society's "Welding Handbook" as supplemented by other pertinent standards of the AWS. Qualification of welders shall be in accordance with the AWS Standards governing same.
5. In assembly and during welding, the component parts shall be adequately clamped, supported, and restrained to minimize distortion and for control of dimensions. Weld reinforcement shall be as specified by the AWS code. Upon completion of welding, all weld splatter, flux, slag, and burrs left by attachments shall be removed. Welds shall be repaired to produce a workmanlike appearance, with uniform weld contours and dimensions. All sharp corners of material to be painted or coated shall be ground to a minimum of 1/32-inch on the flat.

K. Protective Coating: All equipment shall be painted or coated in accordance with Section 09800, Protective Coatings, unless otherwise indicated. Nonferrous metal and corrosion-resisting steel surfaces shall be coated with grease or lubricating oil. Coated surfaces shall be protected from abrasion or other damage during handling, testing, storing, assembly, and shipping.

L. Protection of Equipment: All equipment shall be boxed, crated, or otherwise protected from damage and moisture during shipment, handling, and storage. All equipment shall be protected from exposure to corrosive fumes and shall be kept thoroughly dry at all times. Fans, blowers, pumps, motors, drives, electrical equipment, and other equipment having anti-friction or sleeve bearings shall be stored in weather-tight storage facilities before installation. For extended storage periods, plastic equipment wrappers should be avoided, to prevent accumulation of condensate in gears and bearings.

M. Identification of Equipment Items: Each item of equipment shipped shall have a legible identifying mark corresponding to the equipment number indicated for the particular item.

N. Vibration Level: All reciprocating equipment shall be provided with restrained spring-type vibration isolators or pads per manufacturer's written recommendations.

O. Shop Fabrication: Shop fabrication shall be performed in accordance with the Contract Documents and the approved shop drawings.

2.2 EQUIPMENT ANCHORAGE REQUIREMENTS, DESIGN AND ENGINEERING CALCULATIONS

A. All equipment designed to be fixed in position shall be securely fastened in place. For all equipment with (1) an operating weight of 400 pounds (181 kilograms) or more, or (2) specifically identified in the specifications for anchorage calculations, detailed engineering anchorage calculations and figures shall be submitted to the OWNER REPRESENTATIVE. For other equipment weighing less than 400 pounds (181 kilograms), the equipment manufacturer shall provide recommended anchorage information to the DESIGN-BUILDER for use in the installation of the equipment.

B. It shall be the responsibility of the equipment manufacturer/supplier to provide the engineering anchorage calculations and figures to the DESIGN-BUILDER for submission to the OWNER REPRESENTATIVE. As a minimum, the equipment manufacturer/supplier shall determine the number, dimensions, material, location, embedment, and installation conditions of all anchor bolts to be set in concrete in accordance with these Specifications and Drawings. At the option of the DESIGN-BUILDER, the DESIGN-BUILDER or equipment manufacturer/supplier shall furnish the anchor bolts and associated hardware as specified herein and as determined by engineering anchorage calculations for installation by the DESIGN-BUILDER.

C. Engineering anchorage calculations and figures shall be prepared, stamped, and signed by a Professional Civil Engineer registered in the State of California. Calculations shall include the following steps as a minimum:

1. Determination of the operating weight and centroid of the equipment.
2. Determination of the shear and overturning forces at each anchorage due to the force determined, as specified below, being applied at the equipment's centroid.
3. Determination of the shear and tension forces which must be developed by the anchorage at each support to resist the forces calculated.
4. Selection of anchorage details based upon the maximum shear and tension forces calculated above. As a minimum, details shall include number of bolts, materials, diameter, total length, embedded length, required edge distance, and bolt dimensions.
5. The design for cast-in anchor bolts shall be in accordance with the Uniform Building Code Section 1923. The design of adhesive bolts shall be in accordance with the applicable ICBO report. Design shall be based on installation in concrete with a 28-day compressive strength of 4,000 psi. The use of expansion anchor is not permitted.
6. All anchorage for equipment shall, as a minimum, be designed to comply with the requirements of Section 1630 of the Uniform Building Code.
7. Anchorage shall be designed to resist the minimum lateral force in the direction of each principal horizontal axis using Section 1632 of the Uniform Building Code and the following parameters:

$$Fp = \frac{a_p C_a I_p}{R_p}\left(1 + 3\frac{h_x}{h_r}\right)w_p$$

Where

a_p	=	Numerical Coefficient Specified in Table 16-0, (UBC 97) Minimum = 1.0.
C_a	=	Seismic Coefficient for the El Centro WTP Site Specific PGA is 0.44.
I_p	=	Importance Factor Specified in Table 16-K, (UBC 97) Use 1.5
R_p	=	Numerical Coefficient Specified in Table 16-0, (UBC 97)
h_r	=	Roof Elevation with respect to grade
h_x	=	The element or component attachment elevation with respect to grade. h_r shall not be taken less than 0.0.
W_p	=	The weight of an element or component

8. In addition to the lateral force, anchorage shall be designed to resist a vertical force, Ev. Shall be applied to the equipment

E_v	=	0.5 C_{avo} I D
D	=	Dead load. May be taken as zero for allowable stress design.
C_{avo}	=	Seismic coefficient for the El Centro WTP site specific PGA is 0.44.

9. Anchorage for equipment shall be designed to resist seismic forces occurring at each of the three principal directions separately as well as simultaneously. When combining seismic forces in orthogonal directions simultaneously, the combination of 100 percent Fh1 plus 30 percent of Fh2 plus 30 percent of Fv shall be used. Where inclusion of vertical loads results in a less conservative design, vertical effects shall be neglected.
10. Alternatively, the orthogonal effects may be combined on a square root of the sum of the squares (SRSS) basis, using 100 percent of the forces in three directions.

D. Provide a heavy cast-iron or welded steel base for each item of equipment which is to be installed on a concrete foundation.

1. Mount equipment assemblies on a single, heavy-cast-iron or welded steel bedplate unless otherwise specified or shown on the Drawings.
2. Provide bases and bedplates with machined support pads, tapered dowels for alignment of mating, or adjacent items, adequate openings to facilitate grouting, and openings for electrical conduits.
3. All seams and contact edges between steel plates and shapes shall be continuously welded and ground smooth.
4. Plates shall have a minimum thickness of 1/4-inch.
5. Include a drip lip and provision for directing accumulated gland leakage to a single disposal drain point.

E. Pipe all accumulated gland and seal water leakage and spent cooling water to a floor drain provided by DESIGN-BUILDER adjacent to each piece of equipment.

1. A single floor drain may be provided for more than one piece of equipment provided that the equipment drain line does not create a safety or tripping hazard.
2. If drain piping creates a hazard, provide an additional floor drain adjacent to the equipment at no additional cost to the OWNER.

F. Equipment Foundations: Equipment foundations shall be in accordance with manufacturer's written recommendations. All mechanical equipment, tanks, and control cabinets shall be mounted on concrete bases as shown on standard structural details.

G. Shop Drawings: Shop drawings shall be submitted to the OWNER REPRESENTATIVE for review in accordance with the requirements of Division 1 of the Specifications. Shop drawings will be considered incomplete unless clear, concise calculations are presented showing equipment anchorage forces and the capacities of the anchorage elements provided by the DESIGN-BUILDER.

2.3 PIPE HANGERS, SUPPORTS, AND GUIDES

All pipe connections to equipment shall be supported, anchored, and guided to avoid stresses and loads on equipment flanges and equipment.

2.4 FLANGES AND PIPE THREADS

All flanges on equipment and appurtenances provided under this Section shall conform to ANSI B16.1, Class 125; or B16.5, Class 150, unless otherwise indicated. All pipe threads shall be in accordance with ANSI/ASME B1.20.1, and with requirements of Section 15000, Piping Components.

2.5 NOT USED

2.6 FLEXIBLE COUPLINGS

A. Flexible element couplings shall be provided between the driver and the driven equipment to accommodate slight angular misalignment, parallel misalignment, end float, and to cushion shock loads. Where required for vertical shafts driven by solid shaft

drivers, the coupling shall be a spacer type. The spacer shall be of sufficient length to permit seal replacement without removal of the driver.

B. The DESIGN-BUILDER shall have the equipment manufacturer select or recommend the size and type of coupling required to suit each specific application.

C. Couplings shall be keyed to the shaft. Keys, keyways, and fits shall conform to ISO/R773. Flexible couplings with cylindrical bores shall have interference fits as specified in ISO/R286. Coupling hubs shall be furnished with tapped puller holes.

D. Where universal type couplings are specified, they shall be of the needle bearing type construction, equipped with commercial type grease fittings.

E. Jacking Screws and Anchor Bolts

1. Provide jacking screws in the equipment bases and bedplates to aid in leveling before grouting.
2. Equipment suppliers shall furnish anchor bolts, nuts, washers and sleeves of adequate design as required for proper anchorage of the bases and bedplates to the concrete bases.

    a. Sleeves shall be a minimum of 1.5 times the diameter of the anchor bolts.
    b. Unless otherwise shown or specified, anchor bolts for items of equipment mounted on baseplates shall be long enough to permit 1-inch of grout beneath the baseplate and to provide adequate anchorage into structural concrete.
    c. Anchor bolts, together with templates or setting drawings, shall be delivered sufficiently early to permit setting the anchor bolts when the structural concrete is placed.
    d. Anchor bolts shall be 316 stainless steel for all equipment except for pumps which will be Type 416 stainless steel which conform to ASTM A167 and ASTM A276.

2.7 ELECTRIC MOTOR DRIVES

DESIGN-BUILDER must coordinate the work of all trades and the national safety code requirements for each installation in order to comply with these specifications.

2.8 SHAFTING

A. General: All shafting up to ten feet in length shall be continuous between bearings and shall be sized to transmit the power required. Keyways shall be accurately cut in line. Shafting shall not be turned down at the ends to accommodate bearings or sprockets whose bore is less than the diameter of the shaft. All shafts shall rotate in the end bearings and shall be turned and polished, straight, and true.

B. Materials: Shafting materials shall be appropriate for the type of service and torque transmitted. Environmental elements such as corrosive gases, moisture, and fluids shall

be taken into consideration. Materials shall be as indicated unless furnished as part of an equipment assembly.

1. Cold-rolled steel shafting shall conform to AISI 4140 (A434 CL BB).
2. Corrosion-resistant shafting shall be AISI grade Type 316 stainless steel or Monel, whichever is most suitable for the intended service.

C. Differential Settlement: Where differential settlement between the driver and the driven equipment may be expected, a shaft of sufficient length with two sets of universal type couplings shall be provided.

2.9 BEARINGS

A. General Rotating Element Type: Bearings shall conform to the standards of the Anti-Friction Bearing Manufacturers Association, Inc. (AFBMA).

B. To assure satisfactory bearing application, fitting practice, mounting, lubrication, sealing, static rating, housing strength, and other important factors shall be considered in bearing selection.

C. All bearings that may be lubricated shall be equipped with a hydraulic grease fitting in an accessible location and shall have sufficient grease capacity in the bearing chamber.

D. All lubricated-for-life bearings shall be factory-lubricated with the manufacturer's recommended grease to insure maximum bearing life and best performance.

E. Bearing Life: Except where otherwise indicated, all bearings shall have a minimum L-10 life expectancy of 10 years or 100,000 hours, whichever occurs first.

F. Bearing housings shall be of cast iron, ductile iron, or steel and bearing mounting arrangement shall be as indicated, or as recommended in the published standards of the manufacturer if not indicated. Split-type housings may be used to facilitate installation, inspection, and disassembly.

G. Sleeve-type bearings shall have a Babbitt or bronze liner.

2.10 GEARS AND GEAR DRIVES

A. Unless otherwise indicated, gears shall be of the helical or spiral-bevel type, designed and manufactured in accordance with AGMA Standards, with a minimum service factor of 1.7, a minimum L-10 bearing life of 60,000 hours and a minimum efficiency of 94 percent. Worm gears shall not be used unless specifically approved by the OWNER REPRESENTATIVE.

B. All gear speed reducers or increasers shall be of the enclosed type, oil- or grease-lubricated and fully sealed, with a breather to allow air to escape but keep dust and dirt out. The casing shall be of cast iron or heavy-duty steel construction with lifting lugs and

an inspection cover for each gear train. An oil level sight glass and an oil flow indicator shall be provided and installed for easy reading.

C. Gears and gear drives as part of an equipment assembly shall be shipped fully assembled for field installation.

D. Material selections shall be left to the discretion of the manufacturer, provided the above AGMA values are met. Input and output shafts shall be adequately designed for the service and load requirements. Gears shall be computer-matched for minimum tolerance variation. The output shaft shall have two positive seals to prevent oil leakage.

E. Oil level indicators and drain shall be easily accessible. Oil coolers or heat exchangers with all required appurtenances shall be furnished when necessary.

F. Where gear drive input or output shafts have to connect to couplings or sprockets supplied by others, the DESIGN-BUILDER shall have the gear drive manufacturer supply matching key taped to the shaft for shipment.

2.11 DRIVE CHAINS

A. Power drive chains shall be commercial type roller chains and meet ANSI Standards.

B. A chain take-up or tightener shall be provided in every chain drive arrangement to provide easy adjustment.

C. A minimum of one connecting or coupler link shall be provided with each length of roller chain.

D. Chain and attachments shall be of the manufacturer's best standard material and suitable for the process fluid.

2.12 SPROCKETS

A. General: Sprockets shall be used in conjunction with all chain drives and chain-type material handling equipment.

B. Materials: Unless otherwise indicated, materials shall be as follows:

1. Sprockets with 25 teeth or less, normally used as a driver, shall be made of medium carbon steel in the 0.40 to 0.45 percent carbon range.
2. Type A and B sprockets with 26 teeth or more, normally used as driven sprockets, shall be made of minimum 0.20 percent carbon steel.
3. Large diameter sprockets with Type C hub shall be made of cast iron conforming to ASTM A 48, Class 30.

C. All sprockets shall be accurately machined to ANSI Standards. Sprockets shall have deep hardness penetration in tooth sections.

D. Finish bored sprockets shall be furnished complete with keyseat and set screws.

E. To facilitate installation and disassembly, sprockets shall be of the split type or shall be furnished with taper-lock bushings as required.

F. Idler sprockets shall be furnished with brass or Babbitt bushings, complete with oil hole and axial or circumferential grooving. Steel collars with set screws may be provided in both sides of the hub.

2.13 V-BELT DRIVES

A. V-belts and sheaves shall be of the best commercial grade and shall conform to ANSI, MPTA, and RMA Standards.

B. Unless otherwise indicated, sheaves shall be machined from the finest quality gray cast iron.

C. All sheaves shall be statically balanced. In some applications where vibration is a problem, sheaves shall be dynamically balanced. Sheaves operating at belt speeds exceeding 6,500 fpm may be required to be of special materials and construction.

D. To facilitate installation and disassembly, sheaves shall be furnished complete with taper-lock or QD bushings as required.

E. Finish bored sheaves shall be furnished complete with keyseat and set screws.

F. Sliding motor bases shall be provided to adjust the tension of V-belts.

2.14 DRIVE GUARDS

All power transmission, prime movers, machines, shaft extensions, and moving machine parts shall be guarded to conform with the OSHA Safety and Health Standards (29CFR1910, as adopted and amended by the State of California). The guards shall be constructed of minimum 10-gauge expanded, flattened steel with smooth edges and corners, galvanized after fabrication and securely fastened. Where required for lubrication or maintenance, guards shall have hinged and latched access doors.

2.15 FLEXIBLE CONNECTORS

Flexible connectors shall be installed in all piping connections to engines, blowers, compressors, and other vibrating equipment and in piping systems in accordance with Section 15000, Piping Components.

2.16 NOT USED

2.17 GASKETS AND PACKINGS

A. Gaskets containing asbestos will not be permitted.

B. Packing around valve stems and reciprocating shafts shall be of compressible material, compatible with the fluid being used. Chevron-type "V" packing shall be Garlock No. 432, John Crane "Everseal," or equal.

2.18 NAMEPLATES

Equipment nameplates of Type 316 stainless steel shall be engraved or stamped and fastened to the equipment in an accessible location with No. 4 or larger oval head Type 316 stainless steel screws or drive pins. Nameplates shall contain the manufacturer's name, model, serial number, size, characteristics, and appropriate data describing the equipment performance ratings.

2.19 SAFETY REQUIREMENTS

Where Work areas are located within a flammable or toxic gas environment, suitable gas detection, ventilating, and oxygen deficiency equipment shall be provided. Workers shall be equipped with approved breathing apparatus.

2.20 EQUIPMENT MOUNTS, GROUTING AND VIBRATION ISOLATION

A. Equipment mountings shall be as shown on the Drawings. Where a steel or cast base is shown between the equipment and a concrete pedestal, it shall be painted after fabrication in conformance with applicable provisions of Division 9. It also shall be equipped with drain pans and drain connections, including piping, where applicable.

B. All concrete plan dimensions for bases or pedestals shall be at least 2 inches larger in each dimension than the steel or cast base installed thereon. Dimensions shall be increased as required to obtain the minimum edge distance for anchorage. Conduits, piping connections, drains, etc., shall be installed as shown on the Drawings, or if not shown, as acceptable to the OWNER REPRESENTATIVE.

C. Where specified or noted in the Drawings, the equipment, including the base, shall be mounted on or suspended from vibration isolators to prevent the transmission of vibration and mechanically transmitted sound to the supporting structure. Vibration isolation available internally in the equipment unit is not equivalent and shall not be provided when vibration isolation as specified herein by these Specifications. Normally provided internal vibration isolators need to be replaced with rigid supports in such cases.

D. Where required for certain units of mechanical equipment, details of the vibration isolators are included in the Specifications for furnishing and installing those units.

E. The DESIGN-BUILDER shall furnish the necessary materials and construct suitable raised, reinforced concrete foundations for all installed equipment, even though such foundations may not be indicated on the Drawings. The tops of foundations shall be at such elevations as will permit grouting as specified in this Paragraph 2.9.

F. In setting pumps, motors, and other items of equipment customarily grouted, the DESIGN-BUILDER shall make an allowance of at least one (1) inch for grout under the

equipment bases. All shims shall be removed. Unless otherwise approved, all grout shall be non-shrink grout, acceptable to the CONSTRUCTION MANAGER.

G. Grout shall be mixed and placed in accordance with Section 03600. Where practicable, the grout shall be placed through the grout holes in the base and worked outward and under the edges of the base and across the rough top of the concrete foundation to a peripheral form so constructed as to provide a suitable chamfer around the top edge of the finished foundation.

H. Where such procedure is impractical, the method of placing grout shall be as acceptable to the CONSTRUCTION MANAGER. After the grout has hardened sufficiently, all forms, hoppers and excess grout shall be removed, and all exposed grout surfaces shall be patched in an acceptable manner to the CONSTRUCTION MANAGER, and if necessary, given a burlap rubbed finish, and painted with at least two coats of paint, as noted in Division 9.

2.21 OVERLOAD PROTECTION

A. General: Unless otherwise indicated in individual equipment Sections, all equipment drives incorporating overload protection shall be provided with an overload protection device as follows:

1. Mechanical System: The overload protection shall be a mechanical device to provide for reliable protection in the event of excessive overload. It shall be a ball detent type designed for long-term repeatability and life. It shall be infinitely adjustable by a single adjusting nut. Once set it shall be tamperproof, and incorporate a torque monitoring and control system. It shall activate an alarm set for 85 percent, and a motor cutout switch set for 100 percent of maximum continuous running torque. A visual torque indication shall be provided and oriented so that it may be read from the walkway. The dial shall be calibrated from 0 to 100 percent of maximum continuous running torque. The design of the torque limiter should initiate the mechanical disengagement of the drive upon overload. Each unit shall be suitable for outdoor/corrosive environments with a protective finish, corrosion inhibiting lubricants and a Type 316 stainless steel cover.
2. Electronic System: As an alternative to the mechanical system, the overload protection may be an Electronic Torque Monitoring Control System capable of displaying torque, rpm's, one level of overload, and two levels of overload of the drive system. It shall incorporate a time-delay for start-up and a voltage monitoring and compensation circuit for up to +15 percent variation.
3. The overload device shall be housed in an enclosure with NEMA rating in accordance with the area designations of Section 16050, Basic Electrical Materials and Methods. A visual torque dial shall be provided and oriented so that it can be easily read from the walkway.
4. The torque monitoring system shall be calibrated to: alarm and shut down the system in the event the torque drops to 50 percent of normal running; alarm at 85 percent of maximum continuous running torque and shut down the motor at maximum continuous running torque of the equipment. The system shall be

calibrated at the factory of the equipment manufacturer and it shall be capable of monitoring twice the maximum continuous running torque of the equipment.

B. Manufacturers, or equal:

1. American Autogard Corporation.
2. Ferguson Enterprises, Inc.

2.22 LIFTING LUGS

Lifting lugs or lifting eyebolts shall be provided for all equipment or any component weighing 50 pounds or more, for setting of units or future removal. They shall be galvanized or zinc plated steel.

2.23 NOISE REQUIREMENTS

A. General

1. In an attempt to limit off-site noise, it has been established that each piece of equipment must be limited as to its "free field" noise level. Therefore, unless otherwise specified, the maximum permissible "free field" noise level for a complete piece of equipment shall not exceed 85 dBA at a distance of 3 feet from the equipment and 5 feet from the floor with the equipment operating at any load point up to and including rated load in accordance with the specification and not exceed 50 dBA at a distance of 25 feet from the equipment, and 5 feet from the floor. For the purposes of this Paragraph, "free field" shall be the noise level measured when the equipment shall include the driver, driven equipment and any intermediate couplings, gears and auxiliaries. For a complete piece of mechanical equipment located outside of a structure, the maximum permissible noise level shall comply with the requirements of the CAL-OSHA Standard Specifications.
2. Maximum permissible noise levels are in decibels as read on the "A" weighting network of a standard sound level meter (dBA); all measurements are made in relation to a reference pressure of .0002 microbar. Measurements of emitted noise levels shall be made on a sound level meter meeting at least the Type II requirements as set forth in ANSI S1.4 "Specification for General Purpose Sound Level Meters". The sound level meter shall be set on the "A" scale and to slow response. Unless changed in the specific section relating to a particular piece of equipment, the point of measurement of sound level shall be made at the specified distance from any major surface along the entire perimeter and at mid-height of the piece of equipment. If mid-height is not easily determinable, then line of measurement shall be at a height level with the apparent noise source. To assure accuracy, the sound level meter shall be acoustically calibrated with an appropriate instrument, prior to test measurement.

B. Testing

1. The DESIGN-BUILDER shall furnish for each piece of rotating/moving equipment prior to shipment to the job site, a certified factory noise test report on the actual

equipment to be provided or an unconditional guarantee that the equipment when operating under design conditions will not produce noise exceeding the permissible levels specified.

2. Noise measurements shall be accomplished at the factory or at such other location approved by the CONSTRUCTION MANAGER. These measurements shall be accomplished prior to shipment of any equipment to the job site. The measurements shall take place in a reverberant or semi-reverberant condition, with equipment sitting on a hard reflective surface or conditions identical to the operating conditions of the equipment on this project.
3. Noise level measurements shall be taken or observed by an independent acoustical laboratory or consultant retained and paid for by the DESIGN-BUILDER. Such independent acoustical laboratory or consultant shall be qualified by experience in the acoustical field to take such measurement and shall be responsible for conducting the acoustical sampling in accordance with accepted procedures for the measurement of sound. The laboratory or consultant shall be acceptable to the CONSTRUCTION MANAGER. The person responsible for the tests shall certify the maximum noise levels emanating from the equipment, its operating conditions, the environment in which tests were conducted, a list of the acoustical instruments used, and the points at which the measurements were taken. The description shall be sufficiently detailed to permit the test to be repeated, and shall include a sketch of the item being measured which shows the points of measurement and the point of maximum encountered noise level on the measurement.
4. If the DESIGN-BUILDER provides an unconditional guarantee, the CONSTRUCTION MANAGER may perform field tests for noise generation, which shall be conducted by an independent acoustical laboratory or consultant acceptable to the OWNER. If the noise levels are in excess of the allowable limits, appropriate field noise reduction measures shall be undertaken to reduce the noise to the allowable limits. If the noise level is within the allowable limits the OWNER will pay the DESIGN-BUILDER only for all reasonable expenses directly incurred in conducting the test. Delay, incidental, or extended overhead expenses or claims will not be paid by OWNE. All field noise reduction measures shall be accomplished at the DESIGN-BUILDER's expense, and shall be acceptable to the CONSTRUCTION MANAGER prior to installation. Rated capacities, operational and normal maintenance procedures of the equipment shall not be affected by the noise reduction measures.

   (Note: Noise and vibration tests can be performed by the manufacturer's representatives if they are so qualified).

2.24 PROTECTION AGAINST ELECTROLYSIS

Where dissimilar metals are used in conjunction with each other, suitable insulation acceptable to the CONSTRUCTION MANAGER shall be provided between adjoining surfaces to eliminate direct contact and any resultant electrolysis. The insulation shall be bituminous impregnated felt, heavy bituminous coatings, nonmetallic separators or washers, or other acceptable materials.

2.25 PROVISION FOR TEMPORARY PRESSURE GAUGE CONNECTION

Where pressure gauges are not shown on the suction and discharge piping of pumps, compressors, and blowers, the DESIGN-BUILDER shall make provision for the temporary connection of pressure gauges by providing a connection and tee handle isolation ball valves or corporation stops.

PART 3 - EXECUTION

3.1 PROTECTION

A. Box, crated, or otherwise completely enclosed and protected during shipment, handling and storage in accordance with the manufacturer's recommendations.

1. Protect equipment from exposure to the elements. Keep thoroughly dry and clean at all times.
2. Store pumps, blowers, motors, electrical equipment, and other equipment having anti-friction or sleeve bearings in weather-tight storage facilities such as warehouses. Turn shafts during storage as recommended by the manufacturer to prevent bearing set.
3. Clean and restore all materials and equipment showing evidence of rust, dirt contamination, or other surface or subsurface deterioration to the satisfaction of the CONSTRUCTION MANAGER before installation.

B. Protect painted surfaces against impact, abrasion, discoloration, and other damage.

1. Repaint and repair damaged surfaces to the satisfaction of the CONSTRUCTION MANAGER before acceptance in accordance with the requirements of Section 09800, Protective Coatings.

C. Protect electrical equipment, controls, and insulation against moisture or water damage.

D. The DESIGN-BUILDER shall maintain equipment storage facilities in accordance with the provisions of Division 1 of the Specifications.

E. Store all equipment in the designated storage facilities from delivery until installation.

F. Periodically exercise all mechanical equipment, whether in the DESIGN-BUILDER's designated storage facility before final installation, or whether installed, but not yet placed into service or accepted by the OWNER, in accordance with procedures prescribed by each manufacturer.

3.2 EQUIPMENT INSTALLATION

A. Install all equipment in full accordance with the equipment manufacturer's recommendations and good practice.

1. Where specified in other sections of this specification, factory-trained service personnel shall be on-site to supervise the installation.
2. Sufficient notice shall be given to the CONSTRUCTION MANAGER before equipment installation so that the CONSTRUCTION MANAGER or his representative may be present during installation.

B. General installation requirements:

1. Examine equipment for damage in shipping and handling. The examination shall include checking for corrosion, poor workmanship, dirt or deleterious substances, and poor fits.
2. Level the base plate or bedplate.
3. Install equipment.
4. Check alignment of couplings.
5. If grout has been used, check alignment and levelness after the grout has set.
6. Check direction of rotation and correct, if necessary, to insure proper operation.
7. Provide drain lines from all equipment gland leakage housings, seal water openings, spent cooling water outlets, and strainers to nearest floor drain or point of disposal. Blow-down valves shall be provided on all strainers whether or not shown on the drawings.
8. Ensure that all submerged or intermittently submerged powered equipment does not have power and control cable splices of any kind inside wells or pits.
9. Include oil and grease for equipment lubrication in initial operation.

3.3 PLACING EQUIPMENT IN OPERATION

A. Before being placed in operation, equipment shall be inspected by the manufacturer's factory-trained personnel.

1. Correct all defects discovered during this inspection before initial equipment start-up.
2. Remove internal coatings applied at the factory if required.
3. Lubricate equipment per manufacturer's recommendations and ensure operating levels are correct.

B. Conduct full-load operational tests in the presence of the CONSTRUCTION MANAGER. The results of such tests shall be recorded.

1. Unsatisfactory performance shall be corrected and tests shall be repeated until the equipment performance meets the Specifications.
2. The DESIGN-BUILDER shall furnish all power, materials, services, test equipment and labor required to successfully complete all full load equipment testing specified.
3. The DESIGN-BUILDER shall certify in writing to the CONSTRUCTION MANAGER, in triplicate, that all tests were conducted in accordance with these Specifications and that all components within each system successfully functions as required.

C. The DESIGN-BUILDER shall notify the CONSTRUCTION MANAGER 10 calendar days in advance of the time when the equipment will be placed into operation.

D. During the course of initial operation, the DESIGN-BUILDER shall instruct the OWNER's personnel in the proper operation and maintenance of the equipment, as specified herein.

3.4 COUPLINGS

The DESIGN-BUILDER shall have the equipment manufacturer select or recommend the size and type of coupling required to suit each specific application; installation shall be per equipment manufacturer's printed recommendations.

3.5 INSULATING CONNECTIONS

All insulating connections shall be installed in accordance with the manufacturer's printed instructions.

3.6 PIPE HANGERS, SUPPORTS, AND GUIDES

Hangers, supports, seismic bracing and guides shall be spaced in accordance with ANSI/ASME B.31.1 standard.

3.7 PACKAGED EQUIPMENT

When any system is furnished as pre-packaged equipment, the DESIGN-BUILDER shall coordinate with subcontractors all necessary space and structural requirements, clearances, utility connections, signals, and outputs.

3.8 INSTALLATION CHECK

A. Provide an experienced, competent, and authorized representative of the manufacturer or supplier of each major item of equipment, as specified in Divisions 11, 13, and 16 of these specifications, to check adjust if necessary, and approve the equipment installation.

1. In each case, the equipment supplier's representative shall be present when the equipment is placed in operation.
2. The DESIGN-BUILDER shall have the equipment supplier's representative revisit the job site as often as necessary until all problems are corrected and the equipment installation and operation is satisfactory to the CONSTRUCTION MANAGER.

B. Each equipment supplier's representative shall furnish through the DESIGN-BUILDER a written report certifying that the equipment:

1. has been properly installed and lubricated;
2. is in accurate alignment;
3. is free from all stress imposed by connecting piping or anchor bolts;

4. has been operated successfully under full load conditions for a 24-hour period without interruption; and
5. is ready for continuous operation under specified conditions.

C. Equipment manufacturers shall furnish the services of competent, factory-trained personnel during the warranty period specified to inspect, service, and repair the equipment where required.

1. Service requests shall be answered and acted upon promptly.
2. This requirement shall not include normal maintenance and service of equipment, which will be the responsibility of the OWNER.

D. All costs for this work shall be included in the price bid by the DESIGN-BUILDER, and no additional compensation shall be made by the OWNER.

** END OF SECTION **

SECTION 11001

GENERAL REQUIREMENTS FOR EQUIPMENT

PART 1 - GENERAL

1.1 WORK OF THIS SECTION

This section specifies general requirements which are applicable to all mechanical equipment. The Contractor is responsible for ensuring that all mechanical equipment meets the requirements of this section in addition to the specific requirements of the individual equipment specification section.

1.2 RELATED SPECIFICATION SECTIONS

A. The following specification sections are listed as a reference to the Contractor of requirements specified elsewhere that are most pertinent to equipment items. All equipment furnished shall comply with the provisions of these listed sections in addition to the remainder of the contract documents.

1. Division 1, General Requirements.
2. Section 05500, Miscellaneous Metals
3. Section 05503, Anchor Bolts
4. Section 09800, Protective Coatings
5. Section 10441, Warning Signs
6. Section 11002, Equipment Mounting

1.3 GENERAL REQUIREMENTS

A. All equipment shall be of new sturdy construction of ample strength for all stresses which may occur during fabrication, transportation, erection and during continuous or intermittent operations and shall be adequately stayed, or braced and anchored, and shall be installed in a neat and workmanlike manner. Appearance as well as utility shall be given consideration in the design of details.

B. All equipment shall include all production line improvements made up to the delivery or contract date.

C. The furnishing and installation of equipment shall include testing, painting, checking levels and alignment, furnishing and placing of lubricants of whatever type, and furnishing of factory trained service mechanics or engineers where called for. All equipment when finally installed shall be complete and ready for operation without binding or overloading of critical components or motors. The Contractor shall furnish at no extra cost to the Owner all appurtenances, piping, valves, fittings, wiring, supports, hangers, etc. as are required to place the equipment in first class operating condition and in a neat and workmanlike manner.

D. All fasteners for aluminum shall be stainless steel. All steel other than stainless steel shall be isolated from aluminum with stainless steel, neoprene, or other approved material.

1.4 QUALITY ASSURANCE

A. Arrangement

The arrangement of equipment shown on the plans is based upon information available at the time of design and is not intended to show exact dimensions peculiar to a specific manufacturer. The plans are, in part, diagrammatic, and some features of the illustrated equipment installation may require revision to meet actual equipment installation requirements. Structural supports, foundations, connected piping and valves shown may have to be altered to accommodate the equipment provided. No additional payment will be made for such revisions and alterations which shall be accomplished by the Contractor and approved by the Construction Manager.

B. Motors and Control Devices

1. Control Devices: Control devices, wiring, starters, and other electrical items provided with mechanical equipment shall be as specified in Division 16 and the particular equipment section.

C. Unit Responsibility

Equipment systems made up of two or more components shall be provided as a unit by the responsible manufacturer. Unless otherwise specified, the Contractor shall obtain each system from the supplier of the driven equipment, which supplier shall provide all components of the system to enhance compatibility, ease of construction and efficient maintenance. Contractor is responsible to the Owner for performance of all systems.

D. References

This section references the following documents. They are a part of this section as specified and modified. The latest version in effect at the time of bid shall apply. In case of conflict between the requirements of this section and those of the listed documents, the requirements of this section prevail.

Reference	Title
AFBMA Std 9	Load Ratings and Fatigue Life for Ball Bearings
AFBMA Std 11	Load and Fatigue Life for Roller Bearings
ANSI B1.1	Unified Screw Threads
ANSI B2.1	Pipe Threads (Except Dupeal)
ANSI B16.1	Cast Iron Pipe Flanges and Flanged Fittings, Class 125

ANSI B16.5	Steel Pipe flanges, Flanged Valves and Fittings, Class 150
ANSI B18.2.1	Square and Hex Bolts and Screws, Including Askew Head Bolts, Hex Cap Screws, and Log Screws
ANSI B18.2.2	Square and Hex Nuts
ASTM A449	Standard Specification for Quenched and Tempered Steel Bolts and Studs

1.5 SUBMITTALS

Submittals shall be made as specified for each equipment item or group of related equipment items. Submittals shall be in accordance with Division 1 of the Specifications, and shall identify the equipment by the number listed in the specification section, manufacturer and type designation.

1.6 OPERATION AND MAINTENANCE MANUALS

The Contractor shall furnish operation and maintenance manuals for each equipment system in accordance with Division 1 of the Specifications.

1.7 PROTECTION DURING SHIPMENT

A. Shipping

1. Equipment shall be shipped in sealed, weather-tight, enclosed conveyances and protected against damaging stresses during transport and handling.
2. Bearing housings shall be wrapped or otherwise sealed to prevent contamination by grit and dirt; and ventilation and other types of openings shall be taped closed.
3. Damage shall be corrected to conform to the requirements of the contract before the assembly is incorporated into the work. The Contractor shall bear the costs arising out of dismantling, inspection, repair and reassembly.

B. Factory Applied Coatings

Unless otherwise noted, each item of equipment shall be shipped to the site of the work with a shop applied prime coating meeting the requirements of Section 09800, PROTECTIVE COATINGS. The prime coating shall be applied over clean, dry, surfaces prepared in accordance with Section 09800, PROTECTIVE COATINGS. The prime coating will serve as a base for field applied finish coats.

PART 2 - PRODUCTS

2.1 FLANGES AND PIPE THREADS

A. Flanges on equipment and appurtenances provided under this section shall conform in dimensions and drilling to ANSI B16.1, Class 125 or ANSI B16.5, Class 150, as applicable. Pipe threads shall conform in dimension and limits of size to ANSI B1.1, coarse thread series, Class 2 fit.

B. Threaded flanges shall have a standard taper pipe thread conforming to ANSI B1.20.1. Unless otherwise specified, flanges shall be flat faced.

C. Flange assembly bolts shall be heavy pattern, hexagonal head carbon steel machine bolts, ASTM A449, with heavy pattern, hot pressed hexagonal nuts conforming to ANSI B18.2.1 and ANSI B18.2.2. Submerged equipment shall have Type 316 stainless steel, ASTM A193, Grade B8M bolts and Type 316 stainless steel ASTM A194 hexagonal nuts conforming to ANSI B18.2.1 and ANSI B18.2.2. Threads shall be Unified Screw Threads, Standard Coarse Thread Series, Class 2A and 2B, ANSI B1.1.

2.2 BEARINGS

A. Unless otherwise specified, equipment bearings shall be oil or grease lubricated, ball or roller type, designed to withstand the stresses of the service specified. Each bearing shall be rated in accordance with the latest revisions of AFBMA Methods of Evaluating Load Ratings of Ball and Roller Bearings. Unless otherwise specified, equipment bearings shall have a minimum L-1O rating life of 50,000 hours. The rating life shall be determined using the maximum equipment operating speed.

B. Grease lubricated bearings, except those specified to be factory sealed and lubricated, shall be fitted with easily accessible grease supply, flush, drain and relief fittings. Extension tubes shall be used when necessary. Grease supply fittings shall be standard hydraulic Alemite type.

C. Oil lubricated bearings shall be equipped with either a pressure lubricating system or a separate oil reservoir type system. Each oil lubrication system shall be of sufficient size to safely absorb the heat energy normally generated in the bearing under a maximum ambient temperature of 60°C and shall be equipped with a filler pipe and an external level indicator gage.

2.3 SEALS

A. Mechanical

1. Unless otherwise specified in the equipment sections, rotating shafts shall be provided with mechanical seals and stuffing boxes tapped for flushing seal faces. Seals shall be factory installed. Seals shall be internal, single or double as specified, and unbalanced; except balanced seals shall be provided when shaft speed is greater than 3,600 rpm or when pressures are greater than shown in the following table.

Seal Inside Diameter (inches)	Shaft Speed (rpm)	Sealing Pressure (psig)
1/2" to 2"	Up to 1,800	100
	1,801 to 3,600	50
Over 2" up to 4"	Up to 1,800	50
	1,801 to 3,600	25

2. Single unbalanced seals shall be Crane 8-1, Durametallic RO, or equal unless specified otherwise. Single balanced seals shall be Chesterton 880, Crane 8B-I, or equal. Double seals shall be Chesterton 241, Durametallic RO/RD, or equal unless specified otherwise.
3. To maintain the necessary minimum or maximum pressure across the seal faces, spring pressure shall be uniformly distributed to the sealing faces by a coil spring or multiple springs. The rotating seal element shall be clamped to the shaft and provided with an O-ring seal. The stationary seal element shall be sealed with O-ring or gasket material.
4. Seal faces shall be either tungsten carbide, carbon, silicon carbide or ceramic. Elastomeric materials shall be Viton. Metal parts shall be Type 316 stainless steel.

B. Shaft Packing

Where shaft packing is specified, stuffing boxes shall be tapped to permit introduction of seal liquid and shall hold a minimum of five rows of packing and a bronze lantern ring. Packing shall be die-molded graphite impregnated non-asbestos packing rings of material suitable for the intended service and as recommended by the manufacturer. Lantern rings shall be of two-piece construction and shall be provided with tapped holes to facilitate removal.

2.4 COUPLINGS

A. Unless otherwise specified in the particular equipment sections, equipment with a driver greater than 1/2 hp, and where the input shaft of a driven unit is directly connected to the output shaft of the driver, shall have its two shafts connected by a flexible coupling which can accommodate angular misalignment, parallel misalignment, end float, and which cushions shock loads and dampens torsional vibrations. The flexible member shall consist of a tire with synthetic tension members bonded together in rubber. The flexible member shall be attached to flanges by means of clamping rings and cap screws, and the flanges shall be attached to the stub shaft by means of taperlock bushings which shall give the equivalent of a shrunk-on fit. There shall be no metal-to-metal contact between the driver and the driven unit. Each coupling shall be sized and provided as recommended by the coupling manufacturer for the specific application, considering horsepower, speed of rotation, and type of service.

B. Where torque or horsepower capacities of couplings of the foregoing type is exceeded, Thomas-Rex, Falk Steel Flex, or equal, couplings will be acceptable provided they are

sized in accordance with the equipment manufacturer's recommendations and sizing data are submitted. They shall be installed in conformance with the coupling manufacturer's instructions.

C. The use of mechanical couplings as specified above shall not relieve the Contractor of his responsibility for precise alignment of all driver and driven units.

D. All metal parts shall be Type 316 stainless steel.

2.5 GUARDS

Exposed moving parts shall be provided with guards which meet the requirements of OSHA. Guards shall be fabricated of 14 gage steel, 1/2-13-15 expanded metal screen to provide visual inspection of moving parts without removal of the guard. Guards shall be galvanized after fabrication and painted with the equipment. Guards shall be designed to be readily removable to facilitate maintenance of moving parts. Provisions shall be made to extend lube fittings through guards. Any holes in the guards shall be reinforced.

2.6 CAUTION SIGNS

A. Equipment with guarded moving parts which operate automatically or by remote control shall be identified by signs reading "CAUTION AUTOMATIC EQUIPMENT MAY START AT ANY TIME".

B. Signs shall be constructed of corrosion proof material. Signs shall be installed near guarded moving parts. Signs shall be in accordance with Section 10441, WARNING SIGNS.

2.7 PRESSURE TAPS, TEST PLUGS AND GAGES

Pressure taps shall be provided on the suction and discharge sides of all pumps, blowers and compressors. Pressure and vacuum test plugs and gages shall be provided where specified.

2.8 NAMEPLATES

Nameplates shall be provided on each item of equipment and shall contain the specified equipment name or abbreviation and equipment number. Equipment nameplates shall be engraved or stamped on stainless steel and fastened to the equipment in an accessible location with stainless steel screws or drive pins.

2.9 LUBRICANTS

The Contractor shall provide for each item of mechanical equipment a supply of the lubricant required for the commissioning period. Lubricants shall be of the type recommended by the equipment manufacturer. The Contractor shall limit the various types of lubricants by consolidating them, with the equipment manufacturer's approval, into the least number of different types. Not less than 90 days before the date shown in

his construction schedule for starting, testing and adjusting equipment, the Contractor shall provide the Owner's Representative with 3 copies of a list showing the required lubricants, after consolidation, for each item of mechanical equipment. The list shall show estimated quantity of lubricant needed for a full year's operation, assuming the equipment will be operating continuously.

2.10 SPARE PARTS

A. Where spare parts are required by the specifications, the spare parts for each separate piece of equipment shall be packed in a heavily constructed painted wood box with hinged cover and a locking clasp. The top of the cover shall be painted with the words "SPARE PARTS" followed by the name and number of the piece of equipment involved.

B. Each part shall be individually wrapped in a waterproof container and tagged. Spare bearings shall be encapsulated in an airtight plastic film.

C. Spare parts shall not be used by the contractor during the startup and commissioning of equipment.

2.11 SPECIAL TOOLS AND ACCESSORIES

Any and all tools, instruments or accessories of a special nature which are required to assemble, disassemble, maintain or repair any item of equipment shall be furnished by the Contractor with that piece of equipment. Special tools shall be tagged and well-marked indicating their service and the piece of equipment for which their use is intended. Operation and maintenance manuals shall contain a list and description or pictorial representation of all special tools required for a given piece of equipment.

2.12 LIFTING EYES

Lifting eyes shall be provided on all equipment weighing over 80 lb.

PART 3 - EXECUTION

3.1 GENERAL

Equipment shall be provided and tested within the tolerances recommended by the equipment manufacturer. In addition, equipment provided under the specification sections listed in Paragraph 1.4, Quality Assurance, of this section shall be installed and tested under the direction of installers who have been trained by the equipment manufacturer. This requirement, however, shall not be construed as relieving the Contractor of his overall responsibility for this portion of the work.

3.2 INSTALLATION AND TESTING

The Contractor shall cause each item of equipment to be installed, aligned and tested under the direction of installation engineers who have been factory trained by the

equipment manufacturer. Upon completion of the project and as a condition precedent to final acceptance, the Contractor shall furnish written certification from the equipment manufacturers that each item has been installed, aligned and tested correctly and that the installation meets all of the manufacturer's requirements for efficient, trouble-free operation. This provision, however, shall not be construed as relieving the Contractor of his responsibility for this portion of the work. The Contractor shall furnish all fuel, lubricants, and other required materials for testing and shall perform all work, all in accordance with manufacturers' recommendations.

** END OF SECTION **

SECTION 11002

EQUIPMENT MOUNTING

PART 1 - GENERAL

1.1 WORK OF THIS SECTION

This section specifies equipment mounting consisting of equipment bases, vibration isolation, and seismic restraint applicable to all equipment.

1.2 QUALITY ASSURANCE

Support, anchorage, and mounting of all tanks, piping, and equipment shall be provided by the Contractor according to the Uniform Building Code and the manufacturer's recommendations, unless otherwise specified. All elements required to resist the calculated forces described herein or required by the equipment manufacturer shall be provided by the Contractor.

1.3 SUBMITTALS

A. Calculations and shop drawings for all of the work required above shall be provided in accordance with Division 1 of the Specifications. Anchor bolt, vibration isolation and seismic restraint design shall be made and signed by a civil or structural engineer currently registered in the State of California.

B. Inasmuch as all anchorage of equipment is to be made of poured-in-place concrete elements, it is imperative that types of anchorage be coordinated with the concrete construction so that anchorage may be installed at time of pouring. If calculations and anchorage details are not submitted prior to pouring of concrete, the Contractor shall become responsible for any strengthening of concrete elements because of superimposed seismic loading.

PART 2 - PRODUCTS

2.1 GENERAL

Unless the equipment incorporates unit construction using an integral rigid frame, or is specified otherwise, each item of mechanical equipment, together with its driver, shall be mounted on a rigid steel or cast iron base. Cast iron bases are acceptable only if the equipment is not furnished with a vibration isolation system. Steel or cast bases shall be hot-dip galvanized after fabrication and rigidly grouted into place with non-shrink grout. (Finish painting shall be in accordance with Section 09800, Protective Coatings). Motor mounting hardware for any belt driven configuration shall allow for belt tension adjustment.

2.2 ANCHOR BOLTS

Anchor and assembly bolts shall be of ample size and strength for the purposes intended as determined by the equipment manufacturer in accordance with the requirements of this section. Anchor bolts shall be designed for lateral and pullout forces as specified in Subsection 3.01 below and in accordance with Section 05503. Anchor bolt material shall be as specified in the individual equipment specifications. If material is not specified in the individual equipment section, material shall be per Section 05503. In case of conflict, the individual equipment section shall prevail.

2.3 STRUCTURAL STEEL BASE

Structural steel bases shall be rectangular in shape for all equipment other than centrifugal refrigeration machines and pump bases, which may be "T" or "L" shaped where shown. Pump bases for split case pumps shall include supports for suction and discharge base ells. All perimeter members shall be beams with a minimum depth equal to one tenth of the longest dimension of the base. Beam depth need not exceed 14 in., provided that the deflection and misalignment is kept within acceptable limits as determined by the manufacturer. Grout holes shall be provided for the bases of all equipment where vibration isolation is not specified. Where vibration isolation is required, height saving brackets shall be employed in all mounting locations to provide a base clearing of 1 in. Structural steel bases shall be hot dip galvanized after fabrication and finish painted in accordance with Section 09800, Protective Coatings.

2.4 CAST IRON BASES

Cast iron bases located within a building do not require galvanizing but must be sealed in accordance with the requirements for bleeding surfaces specified in Section 09800, Protective Coatings, prior to grouting. All fasteners requiring connections to the base shall be terminated by nuts welded to the bottom side of the base and plugged with cork, plastic plugs or grease, or acorn nuts. In no case shall the fastener terminate only into the metal base.

2.5 CONCRETE PEDESTALS

All equipment, including bases, shall be mounted on a concrete pedestal. Concrete pedestals shall be at least 3 in. larger than the steel or cast base and shall be adequately doweled into the floor slab. All conduits, piping connections, drains, etc. shall be enclosed by the concrete base. Unless otherwise shown or specified, no related conduits, piping connections, drains, etc. shall be accepted which rise directly from the floor.

PART 3 - EXECUTION

3.1 INSTALLATION

A. Equipment

1. Each piece of equipment shall be anchored to resist a minimum lateral force required by the UBC, the manufacturer of the equipment, or a lateral seismic force of 60% of the operating weight of the equipment, whichever is greater. This force shall be considered acting at the center of gravity of the piece under consideration. No equipment shall be anchored to vertical structural elements without written approval of the Owner's Representative.
2. Equipment which is not vibration isolated shall be anchored directly to the supporting floor system. In addition to the anchorage, all such equipment shall be internally designed so that all static and moving parts are anchored to the supporting framework to resist the imposed seismic force. All forces must be transmitted to the base in order to be anchored as required. Vibration isolated equipment shall be specially designed to meet these same requirements.

B. Piping

1. All piping, raceways, accessories, and appurtenances furnished with equipment shall be anchored to resist a lateral seismic force of 60% of its operating weight without excessive deflection. This force shall be considered acting at the center of gravity of the piece under consideration.
2. Piping with flexible connections and/or expansion joints shall be anchored such that the intended uses of these joints are maintained in the piping system.

C. Ductwork

All ductwork for both heating and ventilating and for mechanical equipment shall be anchored to the floor system(s), walls, or to the roof as shown.

** END OF SECTION **

This page left intentionally blank.

SECTION 11010

ULTRAVIOLET DISINFECTION SYSTEM

PART 1 - GENERAL

1.1 SCOPE

A. The City has procured equipment from a Manufacturer for an open channel, gravity flow, and low-pressure high intensity ultraviolet lamp (UV) disinfection system with an automatic chemical/mechanical cleaning system and variable output lamp drivers. This system will be capable of disinfecting effluent to meet the water quality standards listed in this section.

B. The Contractor shall coordinate with the City and the Manufacturer and shall install all equipment, materials, and appurtenances supplied by the Manufacturer. The Contractor shall also furnish and install any additional materials, equipment, or appurtenances and shall provide all labor required to provide a complete and operational UV system in accordance with this section and the contract documents.

C. The UV disinfection system manufacturer is Trojan Technologies (Manufacturer).

1.2 RELATED SECTIONS:

A. The Work of the following Sections applies to the Work of this Section. Other Sections of the Specifications, not referenced below, shall also apply to the extent required for proper performance of this Work.

1. Division 1 – General Requirements
2. Section 03300, Cast In Place Concrete
3. Section 03490, Pre-cast Concrete Trench
4. Section 03600, Grout
5. Section 05503, Anchor Bolts, Adhesive Anchors, Expansion Anchors, and Concrete Inserts
6. Section 09800, Protective Coatings
7. Section 13121, Pre-engineered Metal Building
8. Division 11 - Equipment
9. Division 16 – Electrical
10. Appendix A – TrojanUV Layout Drawings, Revision D
11. Appendix B – TrojanUV Submittal, Revision C

1.3 DESIGN CRITERIA:

A. The UV equipment shall disinfect effluent with the following characteristics:

1. Peak Flow Per Channel: 8.0 MGD
2. Average Flow Per Channel: 3.3 MGD

3. Minimum Flow Per Channel: 0.9 MGD
4. Total Suspended Solids: 30 mg/L, 30 Day Average grab samples
5. Effluent Temperature Range: 33 to 85 °F (1 to 30 °C)
6. Ultraviolet Transmittance @ 253.7 nm: 62%, minimum
7. Effluent standards to be achieved: 200 Fecal Coliform/100 ml*

**Based on a 30-day Geometric Mean of daily samples for the effluent standard as specified in 1) through 6). Effluent standards shall be guaranteed regardless of influent count to UV system.*

B. The UV system shall be installed in 2 open channels as shown on the Plans.

C. The UV system configuration will be as follows:

1. Number of Channels: 2
2. Number of Banks per Channel: 3
3. Lamps per Bank: 8
4. Total Number of Lamps in the UV System: 48
5. Number of System Control Centers: 1
6. Number of UV Sensors: 1 per bank
7. Number of Power Distribution Centers: 2
8. Number of Hydraulic System Centers: 2

D. Performance Requirements:

1. The UV disinfection system shall be complete with UV Banks and lifting mechanism, System Control Center (SCC), Power Distribution Centers (PDCs), and Hydraulic System Centers (HSCs) as shown on the contract drawings and as specified herein.
2. The UV disinfection system shall produce an effluent conforming to the following discharge permit: 200 Fecal Coliform/100 ml, based on a 30-day Geometric Mean. Grab samples will be taken in accordance with the Microbiology Sampling Techniques found in *Standard Methods for the Examination of Water and Wastewater, 21st Ed*.
3. The UV disinfection system will be designed to deliver a minimum MS2 RED of 30 mJ/cm^2 at peak flow, in effluent with a UV Transmission of 62% at end of lamp life (EOLL) after reductions for quartz sleeve fouling. The basis for evaluating the RED will be the independent third-party bioassay, without exception. Bioassay validation methodology to follow applicable protocols described in 2006 USEPA UVDGM.
4. The RED will be adjusted using an end of lamp life factor of 0.5 to compensate for lamp output reduction over the time period corresponding to the manufacturer's lamp warranty. The use of a higher lamp aging factor will be considered only upon review and approval of independent third party verified data that has been collected and analysed in accordance with protocols described in the NWRI *Ultraviolet Disinfection Guidelines for Drinking Water and Water Reuse*.
5. The RED will be adjusted using a quartz sleeve fouling factor of 0.8 to compensate for quartz sleeve transmission reduction due to wastewater effluent fouling. The use of a higher quartz sleeve fouling factor will be considered only upon review and

approval of independently verified data that has been collected and analysed in accordance with protocols described in the NWRI *Ultraviolet Disinfection Guidelines for Drinking Water and Water Reuse*. The data recorded for the determination of the validated fouling factor must be obtained by testing in secondary wastewater effluent utilizing the same lamp, quartz sleeve and cleaning system proposed by the UV manufacturer.

6. Independent validation for use of higher factors (lamp aging and sleeve fouling) must be submitted to the Engineer for consideration a minimum of fifteen (15) days prior to bid. The independent validation shall have oversight by a qualified registered professional engineer with knowledge and experience in testing and evaluation of UV systems as defined in the EPA UVDGM (Appendix C, Section C.3.3)
7. The system will be designed for complete outdoor installation.

1.4 SUBMITTALS

The Manufacturer has provided submittals for the UV disinfection system, which are included in Appendix A (TrojanUV Layout Drawings, Revision D) and Appendix B (TrojanUV Submittal, Revision C) of the technical specifications. The Contractor shall thoroughly review these documents and if necessary, the Contractor shall coordinate with the Manufacturer to provide any supplemental documentation needed to install or operate the UV disinfection system. Any supplemental or revised documentation provided by the Manufacturer to the Contractor shall be submitted to the Engineer for review and approval.

1.5 MANUFACTURER'S SCOPE OF SUPPLY:

A. The Manufacturer shall supply the following:

1. Six (6) UV Banks (3 per channel). Each bank includes eight (8) UV lamps and quartz sleeves, one (1) UV intensity sensor, one (1) bank-in-place proximity sensor, one (1) chemical-mechanical wiping system, and one (1) automatic bank lifting mechanism.
2. Four (4) UV Bank Frames (2 per channel).
3. One (1) System Control Center (SCC)
4. Two (2) Power Distribution Centers (PDCs)
5. Two (2) Hydraulic System Centers (HSCs)
6. Two (2) Low Water Level Sensors
7. Two (2) Low Water Level Sensor Control Boxes
8. UV lamp cables (between UV bank and PDC)
9. UV intensity sensor cables (between UV bank and PDC)
10. UV proximity sensor cables (between UV bank and PDC)
11. Hydraulic hoses and connectors (between UV bank and HSC)
12. Two (2) Warning Signs
13. One (1) Operator Kit
14. Spare parts:
    a. Eight (8) 1000W Solo Lamps
    b. Four (4) 2kW Solo Lamp Drivers

c. Four (4) Solo Sleeves
d. One (1) Signa UV Sensor
e. Eight (8) Signa 2 Row Wiper Seals
f. One (1) Signa Bank Control Board

1.6 CONTRACTOR SCOPE OF SUPPLY:

A. The Contractor shall supply the following:

1. Electrical conduit, wiring, junction boxes, and distribution panels
2. Controls/communications conduit, wiring, and junction boxes
3. Two (2) level control weirs (304 Stainless Steel, 137” Weir Length) manufactured by Trojan Technologies or an approved equal.
4. Concrete
5. Grout
6. Anchor bolts
7. FRP grating and covers
8. Any additional materials, equipment, or appurtenances required to provide a complete and operational UV system

PART 2 - PRODUCTS

2.1 MANUFACTURER

A. The procured UV disinfection system is TrojanUVSigna™, as manufactured by Trojan Technologies, London, Ontario, Canada.

PART 3 - EXECUTION

3.1 INSTALLATION

A. The Contractor shall install the UV disinfection system in accordance with the contract drawings, manufacturers' shop drawings, instructions, and installation checklist. The Contractor Installation Checklist shall be completed and returned to the Manufacturer at least two (2) weeks prior to date requested for commissioning. Photographs illustrating site readiness are required. The Contractor assumes all responsibility for the installation readiness of the UV system.

B. All labor, materials, and test apparatus necessary for completing the installation shall be furnished by the Contractor at no additional cost to the City or the Manufacturer.

C. The equipment and materials supplied by the Manufacturer are being stored in a secure location at the City’s El Centro Wastewater Treatment Plant. Prior to construction, the Contractor shall take inventory and verify that all equipment and materials are present and undamaged. The Contractor shall immediately notify the City and the Manufacturer of any missing or damaged items.

D. The Contractor shall be responsible for transporting and handling all equipment and materials supplied by the Manufacturer between the storage location and the project site. Any equipment or materials damaged by the Contractor during transportation or installation shall be replaced by the Contractor at no additional cost to the City or the Manufacturer. Costs for insurance of equipment and materials during construction shall be included in the Contractor's bid, at the Contractor's discretion.

3.2 MANUFACTURER'S SERVICES

A. The Manufacturer will provide remote installation assistance by phone or email via the Technical Assistance Center at 1-866-388-0488 or tac@trojanuv.com. Onsite installation assistance will not be provided.

B. Start-up and field-testing (Commissioning):

1. Onsite inspection: For each UV unit, the Manufacturer will provide 1 day of onsite inspection of the installation immediately prior to start-up.
2. Start-up and field-testing: For each UV unit, the Manufacturer will provide up to 3 working days of onsite start-up and field-testing services.
3. Onsite inspection, start-up, and field testing (2 trips, 4 working days each trip) will only be scheduled upon written request. Contractor shall notify the Manufacturer of schedule requirements at least two (2) weeks in advance. Upon arrival to commission the equipment, if the Manufacturer's Certified Service Technician determines the Contractor work is not complete and the start-up cannot be completed in the allotted time, a return visit will be scheduled at the Contractors expense. Contractor shall issue a purchase order to the Manufacturer for the return trip and additional time required at no additional cost to the City.

C. Operator Training:

1. Contractor shall coordinate with the City and shall schedule training for City Operators during the commissioning time allocated.

D. Warranty Service: As outlined in the warranty agreement included in the Manufacturer's submittal.

** END OF SECTION **

This page left intentionally blank.

SECTION 13121

PRE-ENGINEERED BUILDING

PART 1 - GENERAL

1.1 SCOPE

Design, fabricate, furnish, and install two (2) pre-engineered metal buildings as indicated on the plans and herein specified. Coordinate the building structural design with the foundation construction, electrical and mechanical requirements and other incidental or related work. The General Requirements of Division 1 shall apply to the work of this Section as if fully repeated herein.

1.2 QUALITY ASSURANCE

A. Like items of metal building materials specified herein shall be the end products of a single manufacturer.

B. Erector's Qualifications: The erector of the work specified in this section must be approved in writing by the pre-engineered metal building manufacturer.

1.3 SUBMITTALS

Submittals shall be in accordance with Section 01300, SUBMITTALS.

A. Provide manufacturer's literature and technical data indicating any deviation from the plans and Specifications required for complete installation of the proposed building.

B. Submit the required sets of coordinated Shop Drawings showing all components, including doors and other accessories and complete structural calculations for the building and foundation. Shop Drawings must be approved by the Owner prior to placing order for fabrication.

C. Shop Drawings must include, at the minimum:
   1. Drawings showing slab, structural components and dimensions for this project.
   2. Foundation anchor bolt plan with anchor bolt, shear angle and baseplate details for this project.
   3. Calculations developed specifically for this project by a structural ENGINEER registered in the State of California.
   4. Include all door, window and other openings and accessories details and specifications for painting system, including paint manufacturer's name, product trade-name and preparation for shop or field coats.

D. Submit written certification of compliance to these specifications on manufacturer's letterhead, identifying project name, location and date.

1.4 GUARANTEE

Twelve months from start-up not to exceed eighteen months from the ship date. This warranty is limited to the building construction only. Electrical apparatuses shall carry the manufacturers' pass-through warranty only. This warranty does not cover any acts of God, or damage cause by misuse, abuse, vandalism, or neglect.

PART 2 - PRODUCTS

2.1 GENERAL

All components for the pre-engineered metal buildings as herein specified shall, for the purpose of establishing the standard of quality, materials and general configuration desired be as manufactured by PROTECT CONTROLS INC, or approved equal. Other manufacturers will be considered provided they meet or exceed these specifications and are approved in advance by the Construction Manager.

2.2 DIMENSIONS

North Building Dimensions:

Length (inside dimensions) -	20 feet
Width (inside dimensions) -	7 feet
Height (floor to ceiling) -	10 feet

South Building Dimensions:

Length (inside dimensions) -	20 feet
Width (inside dimensions) -	8 feet
Height (floor to ceiling) -	10 feet

2.3 MATERIALS

Base -	Skid-type; utilizing a channel perimeter framework and rigidly braced with channel cross-members. Lifting eyes will be provided to facilitate transportation and final installation. The lifting eyes are removable so as not to present a trip hazard.
Floor -	1/4" smooth; H.R. ASTM A-36 steel plate.
Exterior walls -	18-gauge galvanized steel interlocking panels.
Interior walls -	18-gauge galvanized steel overlapping sheet liner.
Exterior Roof -	18-gauge galvanized steel interlocking panels. The exterior roof slope will be 1/4" per linear foot from the high to the low side of the building.
Interior Ceiling -	18-gauge galvanized steel interlocking panels. The interior ceiling will be flat.

2.4 PAINT

Surface Preparation - All surfaces shall be cleaned as necessary, SSPC-SP-1 (Solvent), SSPC-SP-2 (Hand tool), or SSPC-SP-3 (Power tool) prior to application of primer.

Base - Primer - gray macropoxy 646-100 3-5 mils DFT.
Undercoat - emulsion, 25 mils DFT.

Floor - Primer - gray macropoxy 646-100 3-5 mils DFT.
Finish - gray high solids polyurethane 3-5 mils DFT non-skid.

Exterior - Primer – P60G2 industrial wash primer, 0.3-0.4 mils DFT.
Finish - white high solids polyurethane 3-5 mils DFT.

Interior - Primer - P60G2 industrial wash primer, 0.3-0.4 mils DFT.
Finish - white high solids polyurethane 2-3 mils DFT.

An exterior intermediate coat of gray epoxy, 3-6 mils DFT, is required. Exterior sealant, Sikaflex-lA, is to be applied on all exterior seams prior to paint.

2.5 INSULATION

North (20’ x 7’) Building:
Walls - 3” RIB, composed of 1” foam board, R7.9, continuous and 3.5” un-faced fiberglass batt, R15, compressed to R11.332, cavity (4” nominal wall thickness)
Roof - 3” RIB, composed of 1” foam board, R7.9, continuous and 3.5” un-faced fiberglass batt, R15, compressed to R11.332, cavity (4” nominal roof thickness)
Floor – 3.5” polyurethane spray foam, R-24, continuous
Entry Doors - 1-1/2” foam board, R-9.75

South (20’ x 8’) Building:
Walls - 3” RIB, composed of 1” foam board, R7.9, continuous and 3.5” un-faced fiberglass batt, R15, compressed to R11.332, cavity (4” nominal wall thickness)
Roof - 3” RIB, composed of 2” foam board, R14.4, continuous and 3.5” un-faced fiberglass batt, R15, compressed to R11.332, cavity (5” nominal roof thickness)
Floor – 3.5” polyurethane spray foam, R-24, continuous
Entry Doors - 1-1/2” foam board, R-9.75

2.6 ENTRY DOORS

One (1) per building: 4070 (48”x84”), 16-gauge galvanized steel with frame,
Supplied with the following hardware:

- Panic with thumb latch - stainless steel, US32.
- Cylinder lock with two (2) keys
- Automatic closure with built-in hold open device
- Hinges - stainless steel, ball bearing type
- Gasket - neoprene, closed cell type
- Drip shields, frame and threshold - 14-gauge galvanized steel

- Sign - “Danger - High Voltage - Keep Out”
- Removable transom above door
- 11”x11”x1/4” laminated safety glass window

2.7 WINDOW

One (1) per building: 72”x48”x1/4” laminated safety glass window with commercial aluminum window frame with 3M Silver 15 exterior window tinting.

2.8 FLOOR CUTOUTS

Provide floor cutouts for pre-cast concrete trench access with 12-gauge galvanized steel cover plates with neoprene gaskets, top removable. Coordinate locations with pre-cast concrete trench layout (Specification Section 03490).

2.9 WALL BULKHEAD CUTOUTS

Provide framed wall cutouts for HVAC units and windows.

2.10 FASTENERS:

Exterior screws and miscellaneous hardware shall be Type 316 stainless steel.

2.11 ELECTRICAL PANELS

Provide electrical panels in buildings as shown on the plans.

2.12 INTERIOR LIGHT SWITCHES

Surface mounted, 3-way, 20A, 120V.

2.13 INTERIOR LIGHTING

Fluorescent surface mounted fixtures, 120V, with (2) T8-32w lamps, and electronic ballast, (3 per building)

Keystone LED light tube fixtures, with (2) T8 LED lights, 15W, (2 per building)

2.14 EXTERIOR LIGHTING

120-watt bulkhead fixture, 15,600 lumens, complete with photoelectric control, and 90-minute battery backup, (1 per building)

2.15 COMBINATION EXIT SIGN/EMERGENCY LIGHTING

120VAC input, 6VDC output, 2-head with maintenance free rechargeable battery, solid-state charger and test switch. The unit will provide (90) ninety minutes of emergency lighting upon AC power failure. The exit signs remain illuminated at all times, but will only provide (90) ninety minutes of emergency lighting upon AC power failure, (1 per building)

2.16 RECEPTACLE (INDOOR)

20A, 125V, 5-20R, GFCI, surface mounted duplex, (2 per building)

2.17 RECEPTACLE (OUTDOOR)

20A, 125V, 5-20R, GFCI, surface mounted duplex in a weatherproof box with spring type hinged cover, (1 per building)

2.18 HVAC SYSTEM

Wall mounted low profile heat-pump unit, 3-tons cooling, 5kW electric heat, 240VAC, 1-phase, 41MCA, provided with grilles, high/low pressure controls, low ambient control, compressor anti-cycle relay, maintenance disconnect, and below listed accessories, (1 per building)

- Auto change-over thermostat
- Economizer package

2.19 CONDUIT/WIREWAY

Interior: 4” x 4” NEMA-1 wireway, sized and located as necessary, with 3/4” EMT minimum, surface mounted conduit drops to the electrical devices.
Exterior: 3/4” RGS minimum, surface mounted.

2.20 WIRE

#12 AWG, “THWN”, (Black-White-Green) unless otherwise noted on the contract plans or specifications.

2.21 POWER INTERCONNECTS

Power Feeders:	From the lighting transformer to the lighting panel From the lighting panel to the HVAC unit
House Feeders:	From the lighting panel to basic building loads (lights, receptacles, etc.).

2.22 GROUND PADS

Stainless steel, 3”x4”x1/8”, NEMA 2-bolt pattern, mounted on the exterior, one (1) at each corner of the building, (4 per building)

PART 3 - EXECUTION

3.1 INSPECTION

Prior to performing any work of this section, verify that all work of other trades, as applicable, is complete to the point where the installation may begin.

3.2 FABRICATION

A. The building shall be factory fabricated to the manufacturer's written standards, per the approved Shop Drawings and in accordance with the requirements of the UBC.

B. All material shall be completely fabricated and prepared for shipment, including any necessary crating or bundling. All parts of the building are to be accurately made and true to dimension so that all parts will easily fit together during building construction.

3.3 SITE CLEAN-UP

The Erector shall remove any temporary structure he used during construction, all debris and rubbish resulting from the erection work, all unused materials, and residue from the erection process from the building and building site.

END OF SECTION

SECTION 16010

BASIC ELECTRICAL REQUIREMENTS

PART 1 - GENERAL

1.1 RELATED SECTIONS

A. Requirements specified within this Section apply to Division 16, Electrical. Work specified herein shall be performed as if specified in the individual sections.

1.2 SUBMITTALS

A. Action Submittals:

1. Provide manufacturers' data for the following:
    a. Electrical service components.
    b. Nameplates, signs, and labels.
    c. Contractor Phasing Plans

1.3 DEFINITIONS

A. Corrosive Area: Containment area or area exposed to delivery, storage, transfer, or use of chemicals.

B. Exterior Area: Location not protected from the weather by a building or other enclosed structure.

C. Interior Dry Area: Location inside building or structure where floor is not subject to liquid spills or wash down, nor where wall or roof slab is common to a water-holding or earth-retaining structure.

D. Interior Wet Area: Location inside building or structure where floor is sloped to floor drains or gutters and is subject to liquid spills or wash down, or where wall, floor, or roof slab is common to a water-holding or earth-retaining structure.

1.4 QUALITY ASSURANCE

A. Provide the Work in accordance with the latest version of NFPA 70, NFPA 820. Where required by Authority Having Jurisdiction (AHJ), material and equipment shall be labeled or listed by a nationally recognized testing laboratory or other organization acceptable to the AHJ, to provide a basis for approval under the NEC.

B. Materials and equipment manufactured within the scope of standards published by Underwriters Laboratories Inc. shall conform to those standards and shall have an applied UL listing mark or label.

C. Provide materials and equipment acceptable to AHJ for Class, Division, and Group of hazardous areas indicated.

D. The company or individual providing electrical installations shall have a licensed journeyman electrician supervising the work.

E. Perform work following NFPA 70E requirements.

PART 2 - PRODUCTS

2.1 GENERAL

A. Where two or more units of the same class of material or equipment are required, provide products of a single manufacturer. Component parts of materials or equipment need not be products of the same manufacturer.

B. Material and equipment installed shall be capable of continuous operation at their specified ratings within an ambient temperature range of 32 degrees F to 122 degrees F.

C. Equip panels installed outdoors in direct sun with sun shields.

2.2 EQUIPMENT FINISH

A. Manufacturer's standard finish color, except where specific color is indicated. If manufacturer has no standard color, finish equipment with light gray color finish as approved by District.

2.3 NAMEPLATES

A. Material: Laminated plastic.

B. Attachment Screws: Stainless steel.

C. Color: Black, engraved to a white core.

D. Letter Height:

1. Pushbuttons/Selector Switches: 3/16 inch, block type.
2. Other electrical equipment: 3/8 inch.

2.4 SIGNS AND LABELS

A. Sign size, lettering, and color shall be in accordance with NEMA Z535.4.

PART 3 - EXECUTION

3.1 GENERAL

A. Electrical Drawings show general locations of equipment, devices, and raceway, unless specifically dimensioned. Contractor shall be responsible for actual location of equipment and devices and for proper routing and support of raceways, subject to approval of Engineer.

B. Check approximate locations of light fixtures, switches, electrical outlets, equipment, and other electrical system components shown on Drawings for conflicts with openings, structural members, and components of other systems and equipment having fixed locations. In the event of conflicts, notify Engineer in writing.

C. Install work in accordance with NECA Standard of Installation, unless otherwise specified.

D. Keep openings in boxes and equipment closed during construction. Protect all equipment from debris, dust, metal, shavings, etc.

E. Layout work carefully in advance. Do not cut or notch any structural member or building surface without specific approval of Engineer. Carefully perform cutting, channeling, chasing, or drilling of floors, walls, partitions, ceilings, paving, or other surfaces required for the installation, support, or anchorage of conduit, raceways, or other electrical materials and equipment. Following such work, restore surfaces to original condition

3.2 COMBINING CIRCUITS INTO COMMON RACEWAY

A. Homerun circuits shown on Drawings indicate functional wiring requirements for power and control circuits. Circuits may be combined into common raceways in accordance with the following requirements:

1. Analog control circuits from devices in same general area to same destination.
    a. No power or AC discrete control circuits shall be combined in same conduit with analog circuits.
    b. No Class 2 or Class 3 circuits including, but not limited to, HVAC control circuits, fire alarm circuits, paging system circuits shall be combined with power or Class 1 circuits.
    c. Analog circuits shall be continuous from source to destination. Do not add TJB, splice, or combine into a multi-pair cable without authorization of Engineer.

d. Raceways shall be sized in accordance with the NEC and shall not exceed 40 percent fill.

e. Changes shall be documented on record drawings.

2. Discrete control circuits from devices in the same general area to the same destination.

a. No power or analog control circuits shall be combined in same conduit with discrete circuits.

b. No Class 2 or Class 3 circuits including, but not limited to, HVAC control circuits, fire alarm circuits, and paging system circuits shall be combined with power or Class 1 circuits.

c. Raceways shall be sized in accordance with the NEC and shall not exceed 40 percent fill.

d. Changes shall be documented on record drawings.

3. Power circuits from loads in same general area to same source location (such as: panelboard, switchboard, low voltage motor control center).

a. Lighting Circuits: Combine no more than three circuits to a single raceway. Contractor shall be responsible for increasing conduit and conductor size if derating is required by NEC.

b. Receptacle Circuits, 120-Volt Only: Combine no more than three circuits to a single raceway. Provide a separate neutral conductor for each circuit. Contractor shall be responsible for increasing conduit and conductor size if derating is required by NEC.

c. All Other Power Circuits: Do not combine power circuits without authorization of Engineer.

3.3 NAMEPLATES, SIGNS, AND LABELS

A. Arc Flash Protection Warning Signs:

1. Field mark switchboards, motor control centers, panelboards, and other electrical equipment, to warn qualified persons of potential arc-flash hazards. Locate marking so to be clearly visible to persons before working on energized equipment.

2. Use arc flash hazard boundary, energy level, PPE level and description, shock hazard, bolted fault current, and equipment name from study required in Section 16055, Electrical Systems Analysis as basis for warning signs.

B. Equipment Nameplates:

1. Provide a nameplate to label electrical equipment including switchgear, switchboards, motor control centers, panelboards, motor starters, transformers,

terminal junction boxes, disconnect switches, switches and control stations, outlets and lighting switches.

2. Switchgear, motor control center, transformer, and terminal junction box nameplates shall include equipment designation.

3. Disconnect switch, starter, and control station nameplates shall include name and number of equipment powered or controlled by that device.

4. Switchboard and panelboard nameplates shall include equipment designation, service voltage, and phases.

C. Entry Way Warning Signs:
1. Caution: Hearing protection shall be worn in the area.
2. Warning: High Voltage – Keep out
3. Provide warning signs: Caution – This equipment starts automatically by remote control.
4. Do not enter if light is flashing.

3.4 LOAD BALANCE

A. Drawings and Specifications indicate circuiting to electrical loads and distribution equipment.

B. Balance electrical load between phases as nearly as possible on switchboards, panelboards, motor control centers, and other equipment where balancing is required.

C. When loads must be reconnected to different circuits to balance phase loads, maintain accurate record of changes made, and provide circuit directory that lists final circuit arrangement.

3.5 CLEANING AND TOUCHUP PAINTING

A. Cleaning: Throughout the Work, clean interior and exterior of devices and equipment by removing debris and vacuuming.

B. Touchup Paint:

1. Touchup scratches, scrapes and chips on exterior and interior surfaces of devices and equipment with finish matching type, color, and consistency and type of surface of original finish.

2. If extensive damage is done to equipment paint surfaces, refinish entire equipment in a manner that provides a finish equal to or better than factory finish, that meets requirements of Specification, and is acceptable to Engineer.

3. Provide one gallon or equivalent spray cans of touch-up paint for each color of the provided equipment.

3.6 PROTECTION FOLLOWING INSTALLATION

A. Protect materials and equipment from corrosion, physical damage, and effects of moisture on insulation and contact surfaces.

B. When equipment intended for indoor installation is stored at Contractor's convenience in areas where subject to dampness, moisture, dirt or other adverse atmosphere until completion of construction, ensure adequate protection from these atmospheres is provided and acceptable to Engineer.

END OF SECTION

SECTION 16050

BASIC ELECTRICAL MATERIALS AND METHODS

PART 1 - GENERAL

1.1 SUBMITTALS

A. Action Submittals:

1. Provide manufacturers' data for the following:
   a. Circuit breakers.
   b. Fused and Non-fused switches.
   c. Enclosures: Include enclosure data for products having enclosures.

PART 2 PRODUCTS

2.1 SUPPORT AND FRAMING CHANNELS

A. Carbon Steel Framing Channel:

1. Material: Rolled, mild strip steel, 12-gauge minimum, ASTM A1011/A1011M, Grade 33.
2. Finish: Hot-dip galvanized after fabrication.

B. PVC Coated Framing Channel: Carbon steel framing channel with 40-mil polyvinyl chloride coating.

C. Stainless Steel Framing Channel: Rolled, ASTM A167, Type 316 stainless steel, 12-gauge minimum.

D. Manufacturers:

1. B-Line Systems, Inc.
2. Unistrut Corp.
3. Aickinstrut.

2.2 ENCLOSURES

A. Finish: Sheet metal structural and enclosure parts shall be completely painted using an electrode position process so interior and exterior surfaces as well as bolted structural joints have a complete finish coat on and between them.

B. Color: Manufacturer's standard color (gray) baked-on enamel, unless otherwise shown.

C. Barriers: Provide metal barriers within enclosures to separate wiring of different systems and voltage.

D. Enclosure Selections: Except as shown otherwise, provide electrical enclosures according to the following table:

ENCLOSURES			
Location	**Finish**	**Environment**	**NEMA 250 Type**
Indoor	Unfinished	Industrial Use	12
Indoor and Outdoor	Any	Denoted "WP"	3R
Indoor and Outdoor	Any	Wet and Corrosive	4X; 316 Stainless Steel

PART 3 - EXECUTION

3.1 GENERAL

A. Install equipment in accordance with manufacturer's recommendations.

B. Install enclosures with a 1/4 inch air gap from walls, unless otherwise noted.

3.2 SUPPORT AND FRAMING CHANNEL

A. Install where required for mounting and supporting electrical equipment, raceway, and cable tray systems.

B. Channel Type:

1. Interior, Wet or Dry (Noncorrosive) Locations:
   a. PVC-Coated Conduit: PVC coated.
   b. Steel Raceway and Other Systems Not Covered: Carbon steel.
2. Interior, Corrosive (Wet or Dry) Locations:
   a. PVC-Coated Steel Conduit and Other Systems Not Covered: Type 316 stainless steel, PVC-coated steel.
3. Outdoor Corrosive Locations:
   a. PVC-Coated Steel Conduit and Other Systems Not Covered: Type 316 stainless steel, or PVC coated steel.

C. Paint cut ends prior to installation with the following:

1. Carbon Steel Channel: Zinc-rich primer.
2. PVC-Coated Channel: PVC patch. PVC paint is not acceptable.

END OF SECTION

SECTION 16055

ELECTRICAL SYSTEMS ANALYSIS

PART 1 - GENERAL

1.1 SUBMITTALS

A. Action Submittals:

1. Short circuit study.
2. Protective Device Coordination Study: Submit within 90 days after approval of short circuit study.
3. Arc flash study.
4. Arc flash warning labels.

1.2 QUALITY ASSURANCE

A. Short circuit, protective device coordination, and arc flash studies shall be prepared by a professional electrical engineer registered in the State of California.

1.3 SEQUENCING AND SCHEDULING

A. Initial complete short circuit study shall be submitted and reviewed before Engineer will review Shop Drawings for equipment for incoming service.

B. Initial complete protective device coordination and arc flash studies shall be submitted within 90 days after approval of initial short circuit study.

C. Revised short circuit, protective device coordination, and arc flash studies, and arc flash labels shall be submitted 10 days before energizing electrical equipment.

D. Final short circuit, protective device coordination, and arc flash studies shall be completed prior to Project Substantial Completion. Final version of study shall include as-installed equipment, materials, and parameter data or settings entered into equipment based on study.

E. Submit final arc flash labels described herein and in compliance with NEMA Z535.4 prior to Project Substantial Completion.

1.4 GENERAL STUDY REQUIREMENTS

A. Equipment and component titles used in the studies shall be identical to equipment and component titles shown on Drawings.

B. Perform studies using one of the following electrical engineering software packages:

1. SKM Power Tools for Windows.
2. ETAP.
3. EDSA.
4. Easy Power.

C. Perform complete fault calculations for each proposed source combination.

1. Source combination may include present and future power company supply circuits, large motors, or generators.

D. Utilize proposed and existing load data for study obtained from field investigation of system configuration, wiring information, and equipment.

E. Existing System and Equipment:

1. Extent of existing system to be included in study is limited to system elements that affect new system and equipment.
2. Include fault contribution of existing motors and equipment in study.
3. Include impedance elements that affect new system and equipment.
4. Include protective devices in series with new equipment.

F. Device coordination time-current curves for medium and low voltage distribution system; include individual protective device time-current characteristics.

1.5 SHORT CIRCUIT STUDY

A. General:

1. Prepare in accordance with IEEE 399.
2. Use cable impedances based on copper conductors, except where aluminum conductors are specified or shown.
3. Use bus impedances based on copper bus bars, except where aluminum bus bars are specified or shown.
4. Use cable and bus resistances calculated at 25 degrees C.
5. Use medium-voltage cable reactances based on use of typical dimensions of shielded cables with 133 percent insulation levels.
6. Use 600-volt cable reactances based on use of typical dimensions of THHN/THWN conductors.
7. Use transformer impedances 92.5 percent of "nominal" impedance based on tolerances specified in IEEE C57.12.00.

B. Provide:

1. Calculation methods and assumptions.
2. Typical calculation.
3. Tabulations of calculated quantities.
4. Results, conclusions, and recommendations.
5. Selected base per unit quantities.
6. One-line diagrams.
7. Source impedance data, including electric utility system and motor fault contribution characteristics.
8. Impedance diagrams.
9. Zero-sequence impedance diagrams.

C. Calculate short circuit interrupting and momentary (when applicable) duties for an assumed three-phase bolted fault at each:

1. Electric utility's supply termination point.
2. Main switchboard.
3. Low-voltage switchgear and switchboards.
4. Motor control centers.
5. Standby generators.
6. Branch circuit panelboards.
7. Future load contributions as shown on one-line diagram.

D. Provide bolted line-to-ground fault current study for areas as defined for three-phase bolted fault short circuit study.

E. Provide bolted line-to-line fault current study for areas as defined for three-phase bolted fault short circuit study.

F. Verify:

1. Equipment and protective devices are applied within their ratings.
2. Adequacy of switchgear switchboard and motor control centers bus bars to withstand short circuit stresses.
3. Adequacy of transformer windings to withstand short circuit stresses.
4. Cable and busway sizes for ability to withstand short circuit heating, in addition to normal load currents.

G. Tabulations:

1. General Data:
    a. Short circuit reactances of rotating machines.
    b. Cable and conduit material data.
    c. Bus data.
    d. Transformer data.
    e. Circuit resistance and reactance values.
2. Short Circuit Data (for each source combination):
    a. Fault impedances.
    b. X to R ratios.
    c. Asymmetry factors.
    d. Motor contributions.
    e. Short circuit kVA.
    f. Symmetrical and asymmetrical fault currents.
3. Equipment Evaluation:
    a. Equipment bus bracing, equipment short circuit rating, transformer, cable, busway.
    b. Maximum fault current available.

H. Written Summary:

1. Scope of studies performed.
2. Explanation of bus and branch numbering system.
3. Prevailing conditions.
4. Selected equipment deficiencies.
5. Results of short circuit study.
6. Comments or suggestions.

I. Suggest changes and additions to equipment rating and/or characteristics.

J. Notify Engineer in writing of existing circuit protective devices improperly rated for new fault conditions.

K. Revise data for "as-installed" condition.

L. Electronic Summary:

1. Provide document in a PDF file or CD
2. Provide an electronic file in the Engineering Software project used in compiling the document.

1.6 PROTECTIVE DEVICE COORDINATION STUDY

A. General:

1. Prepare in accordance with IEEE 242.
2. Proposed protective device coordination time-current curves for distribution system, graphically displayed on conventional log-log curve sheets.
    a. Provide separate curve sheets for phase and ground fault coordination for each scenario.
    b. Each curve sheet to have title and one-line diagram that applies to specific portion of system associated with time-current curves on that sheet. Limit number of devices shown to four to six.
    c. Identify device associated with each curve by manufacturer type, function, and, if applicable, recommended tap, time delay, instantaneous and other settings recommended.
    d. Terminate device characteristic curves at a point reflecting maximum symmetrical or asymmetrical fault current to which device is exposed.
    e. Apply motor protection methods that comply with NFPA 70.

B. Plot Characteristics on Curve Sheets (as applicable):

1. Electric utility's relays.
2. Electric utility's fuses including manufacturer's minimum melt, total clearing, tolerance, and damage bands.
3. Medium-voltage equipment relays.
4. Medium-voltage and low-voltage fuses including manufacturer's minimum melt, total clearing, tolerance, and damage bands.
5. Low-voltage equipment circuit breaker trip devices, including manufacturer's tolerance bands.
6. Pertinent transformer full-load currents at 100 percent.
7. Transformer magnetizing inrush currents.
8. Transformer damage curves; appropriate for system operation and location.
9. ANSI transformer withstand parameters.
10. Significant symmetrical and asymmetrical fault currents.

11. Motor overload relay settings for motors greater than 40 horsepower.
12. Ground fault protective device settings.
13. Other system load protective devices for largest branch circuit and feeder circuit breaker in each motor control center.

C. Primary Protective Device Settings for Delta-Wye Connected Transformer:
1. Secondary Line-to-Ground Fault Protection: Primary protective device operating band within transformer's characteristics curve, including a point equal to 58 percent of IEEE C57.12.00 withstand point.
2. Secondary Line-To-Line Faults: 16 percent current margin between primary protective device and associated secondary device characteristic curves.

D. Separate medium voltage relay characteristics curves from curves for other devices by at least 0.4-second time margin.

E. Tabulate Recommended Protective Device Settings:
1. Relays:
a. Current tap.
b. Time dial.
c. Instantaneous pickup.
d. Electronic settings data file.
2. Circuit Breakers:
a. Adjustable pickups.
b. Adjustable time-current characteristics.
c. Adjustable time delays.
d. Adjustable instantaneous pickups.
e. I^2t In/Out.
f. Zone interlocking.
g. Electronic settings data file.

F. Written Summary:
1. Scope of studies performed.
2. Summary of protective device coordination methodology.
3. Prevailing conditions.
4. Selected equipment deficiencies.

5. Results of coordination study.
6. Appendix of complete relay and circuit breaker electronic setting files, submit electronic data files from manufacturer's software.
7. Comments or suggestions.

1.7 ARC FLASH STUDY

A. Perform arc flash hazard study after short circuit and protective device coordination study has been completed, reviewed and accepted.

B. Perform arc flash study in accordance with NFPA 70E, OSHA 29 CFR, Part 1910 Subpart S, and IEEE 1584.

C. Base Calculation: For each major part of electrical power system, determine the following:
1. Flash hazard protection boundary.
2. Limited approach boundary.
3. Restricted approach boundary.
4. Prohibited approach boundary.
5. Incident energy level.
6. Personal protection equipment (PPE) hazard/risk category.
7. Type of PPE required.

D. Produce arc flash warning labels that list items in Paragraph Base Calculation and the following additional items.
1. Bus name.
2. Bus voltage.

E. Produce bus detail sheets that list items in Paragraph Base Calculation and the following additional items:
1. Bus name.
2. Upstream protective device name, type, and settings.
3. Bus line-to-line voltage.

F. Produce arc flash evaluation summary sheet listing the following additional items:
1. Bus name.
2. Upstream protective device name, type, settings.
3. Bus line-to-line voltage.

4. Bus bolted fault.
5. Protective device bolted fault current.
6. Arcing fault current.
7. Protective device trip/delay time.
8. Breaker opening time.
9. Solidly grounded column.
10. Equipment type.
11. Gap.
12. Arc flash boundary.
13. Working distance.
14. Incident energy.
15. Required protective fire rated clothing type and class.

G. Analyze short circuit, protective device coordination, and arc flash calculations and highlight equipment that is determined to be underrated or causes incident energy values greater than 8 cal/cm2. Propose approaches to reduce energy levels.

H. Prepare report summarizing arc flash study with conclusions and recommendations which may affect integrity of electric power distribution system. As a minimum, include the following:

1. Equipment manufacturer's information used to prepare study.
2. Assumptions made during study.
3. Reduced copy of one-line drawing, with hazard category and incident energy displayed as data blocks; 11 inches by 17 inches.
4. Arc flash evaluations summary spreadsheet.
5. Bus detail sheets.
6. Arc flash warning labels printed in color on adhesive backed labels.

PART 2 - PRODUCTS

2.1 ARC FLASH WARNING LABELS

A. Printed in multicolor on adhesive backed labels. Refer to sample label at the end of this specification.

PART3 - EXECUTION

3.1 GENERAL

A. Adjust relay and protective device settings according to values established by coordination study.

B. Make minor modifications to equipment as required to accomplish conformance with short circuit and protective device coordination studies.

C. Notify Engineer in writing of required major equipment modifications.

D. Provide laminated one-line diagrams (minimum size 11 inches by 17 inches) to post on interior of electrical room doors.

E. Provide arc flash warning labels on equipment as specified in this Section.

3.2 SAMPLE

A. The supplement listed below is a part of this Specification:

1. Figure 1: Example Arc Flash Label.

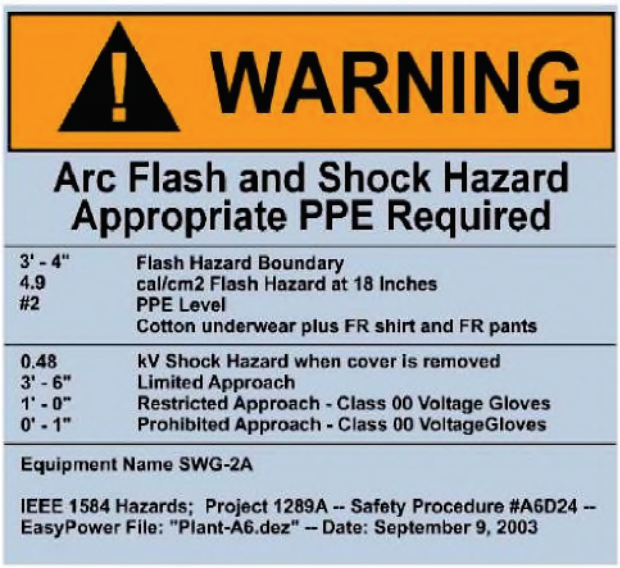

Arc Flash Label

END OF SECTION

SECTION 16060

GROUNDING AND BONDING FOR ELECTRICAL SYSTEMS

PART 1 - GENERAL

1.1 SUBMITTALS

A. Action Submittals:

1. Shop Drawings: Product data for the following:

a. Exothermic weld connectors.

b. Mechanical connectors.

c. Compression connectors.

d. Ground Rods.

1.2 QUALITY ASSURANCE

A. Authority Having Jurisdiction (AHJ):

1. Provide the Work in accordance with NFPA 70, National Electrical Code (NEC). Where required by the AHJ, material and equipment shall be labeled or listed by a nationally recognized testing laboratory or other organization acceptable to the AHJ to provide a basis for approval under NEC.

2. Materials and equipment manufactured within the scope of standards published by Underwriters Laboratories, Inc. shall conform to those standards and shall have an applied UL listing mark.

PART 2 - PRODUCTS

2.1 GROUND ROD

A. Material: Copper-clad. Steel.

B. Diameter: Minimum 5/8 inch.

C. Length: 10 feet.

2.2 GROUND CONDUCTORS

A. As specified in Section 16120, Conductors.

2.3 CONNECTORS

A. Exothermic Weld Type:
   1. Outdoor Weld: Suitable for exposure to elements or direct burial.
   2. Indoor Weld: Utilize low-smoke, low-emission process.
   3. Manufacturers:
      a. Erico Products, Inc.; Cadweld and Cadweld Exolon.
      b. Thermoweld.

B. Compression Type:
   1. Compress-deforming type; wrought copper extrusion material.
   2. Single indentation for conductors 6 AWG and smaller.
   3. Double indentation with extended barrel for conductors 4 AWG and larger.
   4. Barrels prefilled with oxide-inhibiting and antiseizing compound and sealed.
   5. Manufacturers:
      a. Burndy Corp.
      b. Thomas and Betts Co.
      c. ILSCO.

C. Mechanical Type: Split-bolt, saddle, or cone screw type; copper alloy material.
   1. Manufacturers:
      a. Burndy Corp.
      b. Thomas and Betts Co.

PART 3 - EXECUTION

3.1 GENERAL

A. Grounding shall comply with NFPA 70 and IEEE C2.

B. Ground electrical service neutral at service entrance equipment to supplementary grounding electrodes.

C. Ground each separately derived system neutral to nearest effectively grounded building structural steel member or separate grounding electrode.

D. Bond together system neutrals, service equipment enclosures, exposed noncurrent-carrying metal parts of electrical equipment, metal raceways, ground conductor in raceways and cables, receptacle ground connections, and metal piping systems.

E. Shielded Instrumentation Cables:

1. Ground shield to ground bus at power supply for analog signal.
2. Expose shield minimum 1 inch at termination to field instrument and apply heat shrink tube.
3. Do not ground instrumentation cable shield at more than one point.

3.2 WIRE CONNECTIONS

A. Ground Conductors: Install in conduit containing power conductors and control circuits above 50 volts.

B. Nonmetallic Raceways and Flexible Tubing: Install equipment grounding conductor connected at both ends to noncurrent-carrying grounding bus.

C. Connect ground conductors to raceway grounding bushings.

D. Extend and connect ground conductors to ground bus in all equipment containing a ground bus.

E. Connect enclosure of equipment containing ground bus to that bus.

F. Bolt connections to equipment ground bus.

G. Bond grounding conductors to metallic enclosures at each end, and to intermediate metallic enclosures.

H. Junction Boxes: Furnish materials and connect to equipment grounding system with grounding clips mounted directly on box, or with 3/8-inch machine screws.

I. Bond grounding conductors to metal enclosure hinged doors

3.3 GROUND RODS

A. Install full length with conductor connection at upper end.

B. Install with connection point below finished grade, unless otherwise shown.

C. Space multiple ground rods by one rod length.

3.4 CONNECTIONS

A. General:

1. Above grade Connections: Install exothermic weld, mechanical, or compression-type connectors; or brazing.
2. Below grade Connections: Install exothermic weld or compression type connectors.
3. Remove paint, dirt, or other surface coverings at connection points to allow good metal-to-metal contact.
4. Notify Engineer prior to backfilling ground connections.

B. Exothermic Weld Type:

1. Wire brush or file contact point to bare metal surface.
2. Use welding cartridges and molds in accordance with manufacturer's recommendations.
3. Avoid using badly worn molds.
4. Mold filled with metal when making welds.
5. After completed welds have cooled, brush slag from weld area and thoroughly clean joint.

C. Compression Type:

1. Install in accordance with connector manufacturer's recommendations.
2. Install connectors of proper size for grounding conductors and ground rods specified.
3. Install using connector manufacturer's compression tool having proper sized dies.

D. Mechanical Type:

1. Apply homogeneous blend of colloidal copper and rust and corrosion inhibitor before making connection.
2. Install in accordance with connector manufacturer's recommendations.
3. Do not conceal mechanical connections.

3.5 METAL STRUCTURE GROUNDING

A. Ground metal sheathing and exposed metal vertical structural elements to grounding system.

B. Bond electrical equipment supported by metal platforms to the platforms.

C. Provide electrical contact between metal frames and railings supporting pushbutton stations, receptacles, and instrument cabinets, enclosure doors, and raceways carrying circuits to these devices.

3.6 HANDHOLE GROUNDING

A. Install one ground rod inside each.

B. Make connections of grounding conductors fully visible and accessible.

C. Connect all noncurrent-carrying metal parts, and any metallic raceway grounding bushings to ground rod with No. 6 AWG copper conductor.

END OF SECTION

SECTION 16120

CONDUCTORS

PART 1 - GENERAL

1.1 SUBMITTALS

A. Action Submittals:

1. Product Data:

a. Wire and cable.

b. Wire and cable accessories.

c. Cable fault detection system.

B. Informational Submittals:

1. Journeyman lineman or electrician splicing credentials.

2. Factory Test Report for conductors 600 volts and below.

3. Factory Test Report in accordance with AEIC CS 8, including AEIC qualification report for conductors above 600 volts.

1.2 QUALITY ASSURANCE

A. Authority Having Jurisdiction (AHJ):

1. Provide the Work in accordance with NFPA 820 and NFPA 70. Where required by the AHJ, material and equipment shall be labeled or listed by a nationally recognized testing laboratory or other organization acceptable to the AHJ in order to provide a basis for approval under NEC.

2. Materials and equipment manufactured within the scope of standards published by Underwriters Laboratories Inc. shall conform to those standards and shall have an applied UL listing mark.

PART 2 - PRODUCTS

2.1 CONDUCTORS 600 VOLTS AND BELOW

A. Conform to applicable requirements of NEMA WC 70.

B. Conductor Type: Soft drawn stranded copper, 98 percent minimum conductivity.

C. Insulation: Type THHN/THWN-2.

D. Flexible Cords and Cables:

1. Type SOW-A/50 with ethylene propylene rubber insulation in accordance with UL 62.

2. Conform to physical and minimum thickness requirements of NEMA WC 70.

E. Manufacturers:

1. Anaconda.

2. Brand-Rex.

3. General Electric.

4. Okonite.

5. Or equal.

2.2 600-VOLT RATED CABLE

A. General:

1. Type TC, meeting requirements of UL 1277, including Vertical Tray Flame Test at 70,000 Btu per hour, and NFPA 70, Article 340, or UL 13 meeting requirements of NFPA 70, Article 725.

2. Permanently and legibly marked with manufacturer's name, maximum working voltage for which cable was tested, type of cable, and UL listing mark.

3. Suitable for installation in open air, in cable trays, or conduit.

4. Minimum Temperature Rating: 90 degrees C dry locations, 75 degrees C wet locations.

5. Overall Outer Jacket: PVC, flame-retardant, sunlight- and oil-resistant.

B. Type 1, Multi-conductor Control Cable:

1. Conductors:

a. 14 AWG, seven-strand copper.

b. Insulation: 15-mil PVC with 4-mil nylon.

c. UL 1581 listed as Type THHN/THWN-2 rated VW-1.

d. Conductor group bound with spiral wrap of barrier tape.

e. Color Code: In accordance with ICEA S-58-679, Method 1, Table 2.

2. Cable: Passes the ICEA T-29-520, 210,000 Btu per hour Vertical Tray Flame Test.

3. Cable Sizes:

No. of Conductors	Max. Outside Diameter (Inches)	Jacket Thickness (Mils)
3	0.41	45
5	0.48	45
7	0.52	45
12	0.72	60
19	0.83	60
25	1.00	60
37	1.15	80

4. Manufacturers:
   a. Okonite Co.
   b. Southwire.
   c. Or equal

C. Type 3, 16 AWG, Twisted, Shielded Pair, Instrumentation Cable: Single pair, designed for noise rejection for process control, computer, or data log applications meeting NEMA WC 57 requirements.

1. Outer Jacket: 45-mil nominal thickness.
2. Individual Pair Shield: 1.35-mil, double-faced aluminum/synthetic polymer overlapped to provide 100 percent coverage.
3. Dimension: 0.31-inch nominal OD.
4. Conductors:
   a. Bare soft annealed copper, Class B, seven-strand concentric, meeting requirements of ASTM B8.
   b. 18 AWG, seven-strand tinned copper drain wire.
   c. Insulation: 15-mil nominal PVC.
   d. Jacket: 4-mil nominal nylon.
   e. Color Code: Pair conductors, black and clear.
5. Manufacturers:
   a. Okonite Co.
   b. Alpha Wire Corp.
   c. Belden.

D. Type 4, 16 AWG, Twisted, Shielded Triad Instrumentation Cable: Single triad, designed for noise rejection for process control, computer, or data log applications meeting NEMA WC 57 requirements.

1. Outer Jacket: 45-mil nominal.
2. Individual Pair Shield: 1.35-mil, double-faced aluminum/synthetic polymer, overlapped to provide 100 percent coverage.
3. Dimension: 0.32-inch nominal OD.
4. Conductors:
    a. Bare soft annealed copper, Class B, seven-strand concentric, meeting requirements of ASTM B8.
    b. 18 AWG, seven-strand, tinned copper drain wire.
    c. Insulation: 15-mil nominal PVC.
    d. Jacket: 4-mil nylon.
    e. Color Code: Triad conductors black, red, and clear.
5. Manufacturers:
    a. Okonite Co.
    b. Alpha Wire Corp.
    c. Belden.

2.3 SPECIAL CABLES

A. Type 30, Unshielded Twisted Pair (UTP) Telephone and Data Cable, 300V:

1. Category 6 UTP, UL listed, and third party verified to comply with TIA/EIA 568-C Category 6 requirements.
2. Suitable for high speed network applications including gigabit Ethernet and video. Cable shall be interoperable with other standards compliant products and shall be backward compatible with Category 5 and Category 5e.
3. Provide four each individually twisted pair, 23 AWG conductors, with FEP insulation and blue PVC jacket.
4. NFPA 70 Plenum (CMP) rated; comply with flammability plenum requirements of NFPA 70 and NFPA 262.
5. Cable shall withstand a bend radius of 1-inch minimum at a temperature of minus 20 degrees C maximum without jacket or insulation cracking.
6. Manufacturer and Product: Belden; 7852A.

2.4 GROUNDING CONDUCTORS

A. Underground grounding conductors: Bare Copper.

B. Branch circuit and feeder equipment grounding conductors: Bare Copper.

2.5 ACCESSORIES FOR CONDUCTORS 600 VOLTS AND BELOW

A. Tape:

1. General Purpose, Flame Retardant: 7-mil, vinyl plastic, Scotch Brand 33+, rated for 90 degrees C minimum, meeting requirements of UL 510.

2. Flame Retardant, Cold and Weather Resistant: 8.5-mil, vinyl plastic, Scotch Brand 88.

3. Arc and Fireproofing:

a. 30-mil elastomer.

b. Manufacturers and Products:

(1) 3M; Scotch Brand 77, with Scotch brand 69 glass cloth tape binder.

(2) Plymouth; 53 Plyarc, with 77 Plyglas glass tape binder.

B. Wire Markers:

1. Wire markers shall be provided to identify all conductors and cables at equipment terminals, and in pull boxes, handholes, and manholes. The wire markers shall be one uniform standardized marking system. Heat shrinking of the wire markers and clear tubing shall be in accordance with manufacturer's specifications. The field installed conductor wire number shall be labeled with the same number as the terminal number it is connected to.

2. The marking system shall consist of heat shrinkable flame retarded identification sleeves that fit tightly over the wire to be insulated. Wire tags shall be made of a seamless cross-linked polyolefin with a 3 to 1 shrink ratio.

3. Wire marker system shall be UL recognized to Standard 224, MIL-M-81531. Wire markers shall be smear resistant prior to shrinking and achieve mark permanent when shrunk, without the need for permatizing equipment. Markers shall be seamless. Markers shall be resistant to common industrial fluids including Freon TF, Osopropyl Alcohol and Ethylene Glycol. Markers shall have a temperature range of minus 30 degrees C to 105 degrees C and a dielectric strength of 500V/mil minute. Marks shall be legible after 20 eraser rubs and 30 solvent brush strokes. The markers shall be suitable for indoor or outdoor use. A Kroy Tube Marker Model No. K4100 or Tyco #LM2020Plus thermal labeler complete with a case, serial cable and an AC power adapter shall be purchased for tagging wires/cables and shall be supplied as part of the MCC. The system describe as manufactured by Raychem/Kroy Cable Marking, or Brady-

Permasleeve White Polyolefin (B-342), or equal. Heat shrinkable thermoplastic tags are not acceptable.

C. Clear Tubing:

1. Adhesive type wire markers are not acceptable by themselves. Due to higher ambient temperatures as witnessed in the desert, a translucent (clear) shrink tube must be placed over each adhesive wire marker (extending past both edges of adhesive wire marker) and heat shrunk. The clear tube shall be suitable for high temperature performance that meets or exceeds military industrial standards: MIL1-23053, Test C, with UL VW-1 ratings. Operating temperature range shall be minus 55 degrees C to 175 degrees C. Product shall be Kynar as manufactured by Raychem or approved equal.

D. Wire Connectors:

1. Connectors shall be provided for splices and terminal connections of all copper conductors and cables. The connector shall fit the conductor to which it shall be connected, and the assembly shall have pressure contact surfaces of not less than 50 percent. Cutting strands of the conductor or cables to fit within a wire or cable terminal shall not be permitted.

   a. Compression connectors for No. 8 AWG and larger shall be copper lugs for terminal connections and cables, and two-way copper sleeves and taps for splice connections. A crimping tool shall be provided to make a tight and neat compression connection. The connectors and crimping tool shall be Burndy "Hylug", Thomas and Betts "Shure Sta-kon", or approved equal.

   b. Tapered spring connectors shall have a live spring attached to the inner steel housing and enclosed with winged nylon or plastic insulators. Vinyl insulated spring type wire nuts are not approved. Connectors shall be provided for No. 10 AWG conductors and smaller, and shall be Buchanan type B-cap, Ideal type Twister or wing nut, 3M type Hyflex and Ranger, Gardner-Bender type wing nut or approved equal.

   c. Ground clamps shall be provided for cable connections to ground rods and metal pipes as shown on the Drawings. Clamp shall be copper alloy, heavy duty, corrosion resistant and consist of U-bolts, acorns and saddles with bolted cable connections. The ground clamps shall be O-Z/Gedney, Thomas and Betts, Burndy or approved equal. All connectors shall be UL approved for the purpose and shall be accessible.

   d. Terminal block termination shall be the practice when any conductors and spare conductors are installed inside a motor control center, or unit control panel, or local control panel, or free standing panel. Provide future and 25 percent spare terminals for future use.

E. Cable Ties:

1. Nylon, adjustable, self-locking, and reusable.
2. Manufacturer and Product: Thomas & Betts; TY-RAP.

F. Heat Shrinkable Insulation:

1. Thermally stabilized cross-linked polyolefin.
2. Single wall for insulation and strain relief.
3. Dual wall, adhesive sealant lined, for sealing and corrosion resistance.
4. Manufacturers and Products:
   a. Thomas & Betts; SHRINK-KON.
   b. Raychem; RNF-100 and ES-2000.

2.6 PULLING COMPOUND

A. Nontoxic, noncorrosive, noncombustible, nonflammable, water-based lubricant; UL listed.

B. Suitable for rubber, neoprene, PVC, polyethylene, hypalon, CPE, and lead-covered wire and cable.

C. Approved for intended use by cable manufacturer.

D. Suitable for zinc-coated steel, aluminum, PVC, bituminized fiber, and fiberglass raceways.

E. Manufacturers:

1. Ideal Co.
2. Polywater, Inc., Lubricant J
3. Cable Grip Co.
4. Gardner-Bender; Poly Gel

2.7 SOURCE QUALITY CONTROL

A. Conductors 600 Volts and Below: Test in accordance with UL 44 and UL 854.

PART 3 - EXECUTION

3.1 GENERAL

A. Conductor installation shall be in accordance with manufacturer's recommendations.

B. Conductor and cable sizing shown is based on copper conductors, unless noted otherwise.

C. Do not exceed cable manufacturer's recommendations for maximum pulling tensions and minimum bending radii.

D. Terminate conductors and cables, unless otherwise indicated.

E. Tighten screws and terminal bolts in accordance with UL 486A-486B for copper conductors.

F. Cable Lugs: Provide with correct number of holes, bolt size, and center-to-center spacing as required by equipment terminals.

G. Bundling: Where single conductors and cables in manholes, handholes, vaults, cable trays, and other indicated locations are not wrapped together by some other means, bundle conductors from each conduit throughout their exposed length with cable ties placed at intervals not exceeding 12 inches on center.

H. Ream, remove burrs, and clear interior of installed conduit before pulling wires or cables. Clean installed ducts by pulling a flexible steel mandrel, followed by a wire brush and swab, through each duct. Mandrel shall be 1/4-inch less in diameter than the duct diameter. Spare ducts shall have a 200-pound strength nylon cord installed with at least 36 inches of slack at each end.

3.2 CONDUCTOR MATERIAL APPLICATIONS

A. Feeders: Copper; stranded for No. 14 AWG and larger.

B. Branch Circuits: Copper. stranded for No. 12 AWG and larger.

C. Grounding conductors; solid for No. 12 AWG and smaller; stranded for No. 10 AWG and larger.

3.3 CONDUCTOR INSULATION AND MULTICONDUCTOR CABLE APPLICATIONS AND WIRING METHODS

A. Branch Circuits: Type THHN/THWN-2, single conductors in raceway.

B. Calculations for Determining Tension:

When conductors are installed with pulling eyes attached, maximum tension should not exceed 0.008 cmil. Therefore : $T = 0.008 \times N \times cmil$

Where T (tension) is determined in pounds, N is the number of conductors being pulled in, and cmil is the circular-mil.

C. The cable pulling lubricant shall be compatible with all cable jackets. The lubricant shall be clear, contain no greases, silicones, or polyalkylene glycol oils or waxes. Complete cleanup possible with water. The lubricant shall be UL or CSA listed or equal.

3.4 INSTALLATION OF CONDUCTORS AND CABLES

A. Conceal cables in finished walls, ceilings, and floors unless otherwise indicated.

B. Complete raceway installation between conductor and cable termination points according to Section 16130 "Raceways and Boxes" prior to pulling conductors and cables.

C. Use manufacturer-approved pulling compound or lubricant where necessary; compound used must not deteriorate conductor or insulation. Do not exceed manufacturer's recommended maximum pulling tensions and sidewall pressure values.

D. Use pulling means, including fish tape, cable, rope, and basket-weave wire/cable grips, that will not damage cables or raceway.

E. Install exposed cables parallel and perpendicular to surfaces of exposed structural members, and follow surface contours where possible.

3.5 CONNECTIONS

A. Tighten electrical connectors and terminals according to manufacturer's published torque-tightening values. If manufacturer's torque values are not indicated, use those specified in UL 486A-486B.

B. Make splices, terminations, and taps that are compatible with conductor material and that possess equivalent or better mechanical strength and insulation ratings than unspliced conductors.

C. Wiring at Outlets: Install conductor at each outlet, with at least 6 inches of slack. Extending past the outer edge of the box and/or ring adapter.

3.6 POWER CONDUCTOR COLOR CODING

A. Conductors 600 Volts and Below:

1. 6 AWG and Larger: Apply general purpose, flame retardant tape at each end, and at accessible locations wrapped at least six full overlapping turns, covering area 1-1/2 inches to 2 inches wide.
2. 8 AWG and Smaller: Provide colored conductors.
3. Colors:

System	Conductor	Color
All Systems	Equipment Grounding	Bare
240/120 Volts, Single-Phase, Three-Wire	Grounded Neutral One Hot Leg Other Hot Leg	White Black Red
208Y/120 Volts, Three-Phase, Four-Wire	Grounded Neutral Phase A Phase B Phase C	White Black Red Blue
240/120 Volts, Three-Phase, Four-Wire, Delta, Center Tap, Ground on Single-Phase	Grounded Neutral Phase A High (wild) Leg Phase C	White Black Orange Blue
480Y/277 Volts, Three-Phase, Four-Wire	Grounded Neutral Phase A Phase B Phase C	White Brown Orange Yellow
Note: Phase A, B, C implies direction of positive phase rotation.		

Color	Service
Black	L1 of 120V
Brown	Main coil (usually to start P.B.)
Red	480 volt wiring in MCC for phase fail relay
Orange	Trip coil
Yellow	Pump start after time delay (part wound) and interlock control circuit from external source
Bare	Equipment Grounding conductor
Violet	Telemetry Call to start pump
Gray	Common return
White	L2 of 120V (current carrying ground)
Pink	Hot lead (usually to stop P.B.) and Reset Control

4. Tracer: Outer covering of white with identifiable colored strip, other than green, in accordance with NFPA 70.

3.7 CIRCUIT IDENTIFICATION

A. Identify power, instrumentation, and control conductor circuits at each termination, and in accessible locations such as manholes, handholes, panels, switchboards, motor control centers, pull boxes, and terminal boxes.

B. Identify conductors in accordance with the Circuit and Raceway Schedule.

C. Method:

1. Heat shrink wire markers with heat shrink tubing.

2. Taped-on markers or tags relying on adhesives not permitted.

3.8 CONDUCTORS 600 VOLTS AND BELOW

A. Install 10 AWG or 12 AWG conductors for branch circuit power wiring in lighting and receptacle circuits.

B. Do not splice incoming service conductors and branch power distribution conductors 6 AWG and larger, unless specifically indicated or approved by Engineer.

C. Connections and Terminations:

1. Install nylon self-insulated crimp connectors and terminators for instrumentation and control, circuit conductors.

2. Install self-insulated, set screw wire connectors for two-way connection of power circuit conductors 12 AWG and smaller.

3. Install uninsulated crimp connectors and terminators for instrumentation, control, and power circuit conductors 4 AWG through 2/0 AWG.

4. Install uninsulated, bolted, two-way connectors and terminators for power circuit conductors 3/0 AWG and larger.

5. Install uninsulated terminators bolted together on motor circuit conductors 10 AWG and larger.

6. Place no more than one conductor in any single-barrel pressure connection.

7. Install crimp connectors with tools approved by connector manufacturer.

8. Install terminals and connectors acceptable for type of material used.

9. Compression Lugs:

a. Attach with a tool specifically designed for purpose. Tool shall provide complete, controlled crimp and shall not release until crimp is complete.

b. Do not use plier type crimpers.

D. Do not use soldered mechanical joints.

E. Splices and Terminations:

1. Insulate uninsulated connections.

2. Indoor and Outdoor Dry Locations: Use flame retardant, cold- and weather-resistant tape or single wall heat shrink.

3. Below Grade and Wet or Damp Locations: Use dual wall heat shrink.

F. Cap spare conductors with UL listed end caps.

G. Cabinets, Panels, and Motor Control Centers:

1. Remove surplus wire, bridle and secure.

2. Where conductors pass through openings or over edges in sheet metal, remove burrs, chamfer edges, and install bushings and protective strips of insulating material to protect the conductors.

H. Control and Instrumentation Wiring:

1. Where terminals provided will accept such lugs, terminate control and instrumentation wiring, except solid thermocouple leads, with insulated, locking-fork compression lugs.

2. Terminate with methods consistent with terminals provided, and in accordance with terminal manufacturer's instructions.

3. Locate splices in readily accessible cabinets or junction boxes using terminal strips.

4. Where connections of cables installed under this Section are to be made under sections of these specification, leave pigtails of adequate length for bundled connections.

5. Cable Protection:

a. Under Infinite Access Floors: May install without bundling.

b. All Other Areas: Install individual wires, pairs, or triads in flex conduit under floor or grouped into bundles at least 1/2 inch in diameter.

c. Maintain integrity of shielding of instrumentation cables.

d. Ensure grounds do not occur because of damage to jacket over shield.

I. Extra Conductor Length: For conductors to be connected by others, install minimum 6 feet of extra conductor in freestanding panels and minimum 2 feet in other assemblies.

END OF SECTION

SECTION 16130

RACEWAY AND BOXES

PART 1 - GENERAL

1.1 SUBMITTALS

A. Action Submittals:

1. Manufacturer's Literature:
    a. PVC Schedule 40 conduit.
    b. PVC-coated rigid galvanized steel conduit.
    c. Flexible metal, liquid-tight conduit.
    d. Conduit fittings.
    e. Device boxes for use in hazardous areas.
    f. Junction and pull boxes used at or below grade.
    g. Large junction and pull boxes.
    h. Terminal junction boxes.
2. Precast Handholes:
    a. Dimensional drawings and descriptive literature.
    b. Traffic loading calculations.
    c. Accessory information.
3. Equipment and machinery proposed for bending metal conduit.
4. Method for bending PVC conduit less than 30 degrees.

1.2 QUALITY ASSURANCE

A. Authority Having Jurisdiction (AHJ):

1. Provide the Work in accordance with NFPA 820 and NFPA 70, National Electrical Code (NEC). Where required by the AHJ, material and equipment shall be labeled or listed by a nationally recognized testing laboratory or other organization acceptable to the AHJ to provide a basis for approval under NEC.
2. Materials and equipment manufactured within the scope of standards published by Underwriters Laboratories, Inc. shall conform to those standards and shall have an applied UL listing mark.

PART 2 - PRODUCTS

2.1 CONDUIT AND TUBING

A. PVC Schedule 40 Conduit:

1. Meet requirements of NEMA TC 2 and UL 651.
2. UL listed for concrete encasement, underground direct burial, concealed or direct sunlight exposure, and 90 degrees C insulated conductors.

B. PVC-Coated Rigid Galvanized Steel Conduit:

1. Meet requirements of NEMA RN 1.
2. Material:
   a. Meet requirements of NEMA C80.1 and UL 6.
   b. Exterior Finish: PVC coating, 40 mils nominal thickness, bond to metal shall have tensile strength greater than PVC.
   c. Interior finish: Urethane coating, 2 mils nominal thickness.
3. Threads: Hot-dipped galvanized and factory coated with urethane.
4. Bendable without damage to either interior or exterior coating.

C. Flexible Metal, Liquid-Tight Conduit:

1. UL 360 listed for 105 degrees C insulated conductors.
2. Material: Galvanized steel, with an extruded PVC jacket.
3. Conduits less than 1-1/4" shall have an internal copper bonding conductors wound spirally in the space between each convolution.

2.2 FITTINGS

A. PVC Conduit and Tubing:

1. Meet requirements of NEMA TC-3.
2. Type: PVC, slip-on.

B. PVC-Coated Rigid Galvanized Steel Conduit:

1. Meet requirements of UL 514B.
2. Fittings: Rigid galvanized steel type, PVC coated by conduit manufacturer.

3. Conduit Bodies: Cast metal hot-dipped galvanized or urethane finish. Cover shall be of same material as conduit body. PVC coated by conduit manufacturer.
4. Finish: 40-mil PVC exterior, 2-mil urethane interior.
5. Overlapping pressure-sealing sleeves.
6. Conduit Hangers, Attachments, and Accessories: PVC-coated.
7. Manufacturers:
    a. Robroy Industries.
    b. Ocal.
8. Expansion Fitting Manufacturer and Product: Ocal; OCAL-BLUE XJG.

C. Flexible Metal, Liquid-Tight Conduit:
1. Metal insulated throat connectors with integral nylon or plastic bushing rated for 105 degrees C.
2. Insulated throat and sealing O-rings.
3. Manufacturers and Products:
    a. Thomas & Betts; Series 5331.
    b. O-Z/Gedney; Series 4Q.

D. Flexible Coupling, Hazardous Locations:
1. Approved for use in the atmosphere involved.
2. Rating: Watertight and UL listed for use in Class I, Division 1 and 2 areas.
3. Outer bronze braid and an insulating liner.
4. Conductivity equal to a similar length of rigid metal conduit.
5. Manufacturers and Products:
    a. Crouse-Hinds; Type ECGJH or ECLK.
    b. Appleton; EXGJH or EXLK.

E. Watertight Entrance Seal Device:
1. New Construction:
    a. Material: Oversized sleeve, malleable iron body with sealing ring, pressure ring, grommet seal, and pressure clamp.
    b. Manufacturer and Product: O-Z/Gedney; Type FSK or WSK, as required.
2. Cored-Hole Application:

a. Material: Assembled dual pressure disks, neoprene sealing ring, and membrane clamp.

b. Manufacturer and Product: O-Z/Gedney; Series CSM.

2.3 OUTLET AND DEVICE BOXES

A. Cast Metal:

1. Box: Malleable iron.
2. Cover: Gasketed, weatherproof, malleable iron, with stainless steel screws.
3. Hubs: Threaded.
4. Lugs: Cast Mounting.
5. Manufacturers and Products, Nonhazardous Locations:
   a. Crouse-Hinds; Type FD.
   b. Appleton; Type FD.
   c. Killark.
6. Manufacturers and Products, Hazardous Locations:
   a. Crouse-Hinds; Type GUA or EAJ.
   b. Appleton; Type GR.

B. PVC-Coated Cast Metal:

1. Type: One-piece.
2. Material: Malleable iron, cast ferrous metal, or cast aluminum.
3. Coating:
   a. Exterior Surfaces: 40-mil PVC.
   b. Interior Surfaces: 2-mil urethane.
4. Manufacturers:
   a. Robroy Industries.
   b. Ocal.

2.4 TERMINAL JUNCTION BOX

A. Cover: Hinged, unless otherwise shown.

B. Interior Finish: Paint with white enamel or lacquer.

C. Terminal Blocks:

1. Separate connection point for each conductor entering or leaving box.
2. Spare Terminal Points: 20 percent, minimum.

2.5 TERMINAL BLOCKS

A. Provide terminal blocks as needed per the amount required for all the connections with 20 percent additional spare terminals for future connections. The terminal blocks shall be din rail mounted, 600V ac, 30-amp minimum, capable of accommodating multiple wire terminations of two No. 2 AWG minimum. Terminal blocks used in pull out starter buckets shall be latched pull apart type without disconnecting the wire from the terminal blocks. Wire termination shall accommodate at least one No. 18 to one No. 10 AWG conductors. Provide spacers and end stops where necessary. Terminal numbers shall not be duplicated anywhere within the motor control center (MCC) unless the terminal point is the same potential and function throughout the MCC, i.e. L1 or L2 or N.

B. Blown fuse indicators and fuse pullers shall be a part of terminal blocks used for holding fuses within the circuitry. Minimum current rating of the fuse holder shall be 30-amperes. The terminal blocks shall be UL recognized as a minimum.

2.6 PRECAST HANDHOLES

A. Concrete Strength: Minimum, 3,000 psi compressive, in 28 days.

B. Loading: AASHTO, H-20 in accordance with ASTM C857.

C. Access: Provide cast concrete 6- or 12-inch risers between top of box and finished grade at required elevations.

D. Drainage:

1. Slope floors toward drain points, leaving no pockets or other nondraining areas.
2. Provide drainage outlet or sump at low point of floor constructed with a heavy, cast iron, slotted or perforated hinged cover, and a minimum 4-inch outlet and outlet pipe.

E. Raceway Entrances:

1. Provide on all four sides.
2. For raceways to be installed under this Contract, provide knockout panels or precast individual raceway openings.
3. At entrances where raceways are to be installed by others, provide minimum 12-inch high by 24-inch wide knockout panels for future raceway installation.

F. Embedded Pulling Iron:

1. Material: 3/4-inch diameter stock, fastened to overall steel reinforcement before concrete is placed.
2. Location:
    a. Wall: Opposite each raceway entrance and knockout panel for future raceway entrance.
    b. Floor: Centered below manhole or handhole cover.

G. Cable Racks:

1. Arms and Insulators: Adjustable, of sufficient number to accommodate cables for each raceway entering or leaving, including spares.
2. Wall Attachment:
    a. Adjustable inserts in concrete walls. Bolts or embedded studs not permitted.
    b. Insert Spacing: Maximum 3 feet on center for entire inside perimeter.
    c. Arrange so that spare raceway ends are clear for future cable installation.

H. Handhole Frames and Covers:

1. Frame Material: Steel, hot-dipped galvanized.
2. Cover Type: Solid aluminum, bolt-on, hinged, torsion spring, of nonskid design.
3. Cover Loading: AASHTO H-20.
4. Cover Designation: Burn by welder, on upper side in integral letters, minimum 2 inches in height, appropriate titles:
    a. 600 Volts and Below: ELECTRICAL POWER.
    b. SIGNAL.
    c. CONTROL.

I. Hardware: Steel, hot-dip galvanized.

J. Furnish knockout for ground rod in each handhole.

K. Manufacturers:

1. Utility Vault Co.
2. Penn-Cast Products, Inc.
3. Concrete Conduit Co.
4. Associated Concrete Products, Inc.
5. Pipe, Inc.

2.7 ACCESSORIES

A. Duct Bank Spacers:

1. Type: Nonmetallic, interlocking, for multiple conduit sizes.
2. Suitable for all types of conduit.
3. Manufacturers:
   a. Underground Device, Inc.
   b. Carlon.

B. Identification Devices:

1. Raceway Tags:
   a. Material: Brass.
   b. Shape: Round, 1-inch diameter, or larger oval, if necessary to fit designation.
   c. Raceway Designation: Pressure stamped, embossed, or engraved.
   d. Tags relying on adhesives or taped-on markers not permitted.
   e. Attached to conduits with stainless steel 0.02 dia or 14 gauge bailing wire.
2. Warning Tape:
   a. Material: Polyethylene, 4-mil gauge with detectable strip.
   b. Color: Red.
   c. Width: Minimum 3 inches.
   d. Designation: "CAUTION, BURIED ELECTRICAL LINE BELOW".
   e. Identifying Letters: Minimum 1-inch high permanent black lettering imprinted continuously over entire length.
   f. Manufacturers and Products:
      (1) Panduit; Type HTDU.
      (2) Reef Industries; Terra Tape.

C. Heat Shrinkable Tubing:

1. Material: Heat-shrinkable, cross-linked polyolefin.
2. Semi-flexible with meltable adhesive inner liner.
3. Color: Black.
4. Manufacturers:

a. Raychem.

b. 3M.

D. Wraparound Duct Band:

1. Material: Heat-shrinkable, cross-linked polyolefin, precoated with hot-melt adhesive.

2. Width: 50 mm minimum.

3. Manufacturer and Product: Raychem; Type TWDB.

PART 3 - EXECUTION

3.1 GENERAL

A. Conduit and Tubing sizes shown are based on the use of copper conductors. Aluminum conductors are not acceptable.

B. All installed Work shall comply with NECA Installation Standards.

C. Crushed or deformed raceways not permitted.

D. Maintain raceway entirely free of obstructions and moisture.

E. Immediately after installation, plug or cap raceway ends with watertight and dust-tight seals until time for pulling in conductors.

F. Sealing Fittings: Provide drain seal in vertical raceways where condensate may collect above sealing fitting.

G. Avoid moisture traps where possible. When unavoidable in exposed conduit runs, provide junction box and drain fitting at conduit low point.

H. Group raceways installed in same area.

I. Proximity to Heated Piping: Install raceways minimum 12 inches from parallel runs.

J. Follow structural surface contours when installing exposed raceways. Avoid obstruction of passageways.

K. Run exposed raceways parallel or perpendicular to walls, structural members, or intersections of vertical planes.

L. Block Walls: Do not install raceways in same horizontal course or vertical cell with reinforcing steel.

M. Install watertight fittings in outdoor, underground, or wet locations.

N. Paint threads and cut ends, before assembly of fittings, galvanized conduit, PVC-coated galvanized conduit, or IMC installed in exposed or damp locations with zinc-rich paint or liquid galvanizing compound.

O. Metal conduit shall be reamed, burrs removed, and cleaned before installation of conductors, wires, or cables.

P. Do not install raceways in concrete equipment pads, foundations, or beams.

Q. Horizontal raceways installed under floor slabs shall lie completely under slab, with no part embedded within slab.

R. Install concealed, embedded, and buried raceways so that they emerge at right angles to surface and have no curved portion exposed.

S. Install conduits for fiber optic cables, telephone cables, and Category 6 data cables in strict conformance with the requirements of EIA/TIA 569-A.

T. Innerducts, where installed, shall be used for fiber optic installation, and inside PVC or metal conduit only.

3.2 REUSE OF EXISTING CONDUITS

A. Where Drawings indicate, existing conduits may be reused, they may be reused only where they meet the following criteria.

1. Conduit is in useable condition with no deformation, corrosion, or damage to the exterior surface.
2. Conduit is sized in accordance with the NEC.
3. Conduit is of the type specified in Contract Documents.
4. Conduit is supported as specified in Contract Documents.

B. Conduit shall be reamed with wire brush, then with a mandrel approximately 1/4 inch smaller than raceway inside diameter then cleaned prior to pulling new conductors.

3.3 CONDUIT APPLICATION

A. Diameter: Minimum 3/4 inch.

B. Exterior, Exposed:

1. PVC-coated rigid galvanized steel.

C. Interior, Exposed:

1. PVC-coated rigid galvanized steel.

D. Direct Earth Burial:

1. PVC Schedule 40. All bends 45 degrees and larger shall be PVC-coated rigid steel.

E. Concrete-Encased Raceways:

1. PVC Schedule 40. All bends 45 degrees and larger shall be PVC-coated rigid steel.

F. Transition from Underground or Concrete Embedded to Exposed: PVC-coated rigid steel conduit.

G. Exterior Light Pole Foundations: PVC-coated rigid steel conduit.

H. Corrosive Areas: PVC-coated rigid galvanized steel.

I. Hazardous Gas Areas: PVC-coated rigid galvanized steel.

3.4 FLEXIBLE CONNECTIONS

A. For motors, wall or ceiling mounted fans and unit heaters, dry type transformers, electrically operated valves, instrumentation, and other locations approved by Engineer where flexible connection is required to minimize vibration:

1. Conduit Size 4 Inches or Less: Flexible, metal, liquid-tight conduit.

2. Hazardous Areas: Flexible coupling suitable for Class I, Division 1 and 2 areas.

3. Length: 18-inch minimum, 60-inch maximum, sufficient to allow movement or adjustment of equipment.

3.5 PENETRATIONS

A. Make at right angles, unless otherwise shown.

B. Notching or penetration of structural members, including footings and beams, not permitted.

C. Entering Structures:

1. General: Seal raceway at the first box or outlet with oakum or expandable plastic compound to prevent the entrance of gases or liquids from one area to another.

2. Concrete Roof or Membrane Waterproofed Wall or Floor:

a. Provide a watertight seal.

b. Without Concrete Encasement: Install watertight entrance seal device on each side.

c. With Concrete Encasement: Install watertight entrance seal device on the accessible side.

d. Securely anchor malleable iron body of watertight entrance seal device into construction with one or more integral flanges.

e. Secure membrane waterproofing to watertight entrance seal device in a permanent, watertight manner.

3. Heating, Ventilating, and Air Conditioning Equipment:

a. Penetrate equipment in area established by manufacturer.

b. Terminate conduit with flexible metal, liquid-tight conduit at junction box or condulet attached to exterior surface of equipment prior to penetrating equipment.

c. Seal penetration with Type 5 sealant.

4. Corrosive-Sensitive Areas:

a. Seal all conduit passing through room walls.

b. Seal conduit entering equipment panel boards and field panels containing electronic equipment.

5. Existing or Precast Wall (Underground): Core drill wall and install a watertight entrance seal device.

6. Nonwaterproofed Wall or Floor (Underground, without Concrete Encasement):

a. Provide Schedule 40 galvanized pipe sleeve, or watertight entrance seal device.

b. Fill space between raceway and sleeve with expandable plastic compound or oakum and lead joint, on each side.

7. Handholes:

a. Metallic Raceways: Provide insulated grounding bushings.

b. Nonmetallic Raceways: Provide bell ends flush with wall.

c. Install such that raceways enter as near as possible to one end of wall, unless otherwise shown.

3.6 SUPPORT

A. Support from structural members only, at intervals not exceeding NFPA 70 requirements, and in any case not exceeding 6 feet. Do not support from piping, pipe supports, or other

raceways. A support shall be located within 3 feet of any termination or change of direction.

B. Multiple Adjacent Raceways: Provide ceiling trapeze. For trapeze-supported conduit, allow 20 percent extra space for future conduit.

C. Application/Type of Conduit Strap:

1. PVC-Coated Rigid Steel Conduit: PVC-coated metal.

D. Provide and attach wall brackets, strap hangers, or ceiling trapeze as follows:

1. Wood: Wood screws.
2. Hollow Masonry Units: Toggle bolts.
3. Concrete or Brick: Expansion shields, or threaded studs driven in by powder charge, with lock washers and nuts.
4. Steelwork: Machine screws.
5. Location/Type of Hardware:
    a. Dry, Noncorrosive Areas: Galvanized.
    b. All Others: Stainless steel.

E. Nails or wooden plugs inserted in concrete or masonry for attaching raceway not permitted. Do not weld raceways or pipe straps to steel structures. Do not use wire in lieu of straps or hangers.

3.7 BENDS

A. Install concealed raceways with a minimum of bends in the shortest practical distance.

B. Make bends and offsets of longest practical radius. Bends in conduits and ducts being installed for fiber optic cables shall be not less than 20 times cable diameter, 15 inches minimum.

C. Install with symmetrical bends or cast metal fittings.

D. Field-made bends and offsets, where necessary, shall be made with an acceptable hickey or bending machine. Do not heat metal raceways to facilitate bending.

E. Make bends in parallel or banked runs from same center or centerline with same radius so that bends are parallel.

F. Factory elbows may be installed in parallel or banked raceways if there is change in plane of run, and raceways are same size.

G. PVC Conduit:

1. Bends 45 Degrees and Larger: Provide PVC-coated rigid steel elbows.
2. Use manufacturer's recommended method for forming smaller bends.

H. Flexible Conduit: Do not make bends that exceed allowable conductor bending radius of cable to be installed or that significantly restricts conduit flexibility.

3.8 EXPANSION/DEFLECTION FITTINGS

A. Provide on all raceways at all structural expansion joints, and in long tangential runs.

B. Provide expansion/deflection joints for 50 degrees F maximum temperature variation.

C. Install in accordance with manufacturer's instructions.

3.9 PVC CONDUIT

A. Solvent Welding:

1. Provide manufacturer recommended solvent; apply to all joints.
2. Install such that joint is watertight.

B. Adapters:

1. PVC to Metallic Fittings: PVC terminal type.
2. PVC to Rigid Metal Conduit or IMC: PVC female adapter.

C. Belled-End Conduit: Bevel the unbelled end of the joint prior to joining.

3.10 PVC-COATED RIGID STEEL CONDUIT

A. Install in accordance with manufacturer's instructions.

B. Tools and equipment used in cutting, bending, threading and installation of PVC-coated rigid conduit shall be designed to limit damage to PVC coating.

C. Provide PVC boot to cover all exposed threading.

D. Touch up with manufacturer's recommended methods to repair damage and nicked PVC coatings. PVC paint will not be accepted. A PVC patch is the method required to keep the 40-mil thickness.

3.11 TERMINATION AT ENCLOSURES

A. Cast Metal Enclosure: Provide manufacturer's premolded insulating sleeve inside metallic conduit terminating in threaded hubs.

B. Sheet Metal Boxes, Cabinets, and Enclosures:

1. General:

a. Install insulated bushing on ends of conduit where grounding is not required.

b. Provide insulated throat when conduit terminates in sheet metal boxes having threaded hubs.

c. Utilize sealing locknuts or threaded hubs on sides and bottom of NEMA 3R and NEMA 12 enclosures.

d. Terminate conduits at threaded hubs at the tops of NEMA 3R and NEMA 12 boxes and enclosures.

e. Terminate conduits at threaded conduit hubs at NEMA 4 and NEMA 4X boxes and enclosures.

2. PVC-Coated Rigid Galvanized Steel Conduit:

a. Provide PVC-coated, liquid-tight, metallic connector.

b. Install grounding bushing.

c. Provide bonding jumper from grounding bushing to equipment ground bus or ground pad.

3.12 UNDERGROUND RACEWAYS

A. Grade: Maintain minimum grade of 4 inches in 100 feet, either from one handhole, or pull box to the next, or from a high point between them, depending on surface contour.

B. Cover: Maintain minimum 2-foot cover above conduit and concrete encasement, unless otherwise shown.

C. Make routing changes as necessary to avoid obstructions or conflicts.

D. Couplings: In multiple conduit runs, stagger so couplings in adjacent runs are not in same transverse line.

E. Union type fittings not permitted.

F. Spacers:

1. Provide preformed, nonmetallic spacers, designed for such purpose, to secure and separate parallel conduit runs in a trench or concrete encasement.

2. Install at intervals not greater than 5 feet.

G. Support conduit to prevent bending or displacement during backfilling or concrete placement.

H. Transition from Underground or Concrete Embedded to Exposed: All exposed conduit stub-ups or risers shall be PVC-RGS.

I. Installation with Other Piping Systems:

1. Crossings: Maintain minimum 12-inch vertical separation.

2. Parallel Runs: Maintain minimum 12-inch separation.

3. Installation over valves or couplings not permitted.

J. Provide expansion fittings that allow minimum of 4 inches of movement in vertical conduit runs from underground where exposed conduit will be fastened to or will enter building or structure.

K. Provide deflectional/expansion fittings in conduit runs that exit building or structure belowgrade. Conduit from building wall to fitting shall be PVC-coated rigid steel.

L. Concrete Encasement:

1. Concrete Color: Red iron oxide pigment, in the proportion of 2 pounds per sack of cement.

2. Concrete shall be 2 sack mix, Class C (500PSI minimum).

M. Backfill:

1. Controlled low strength fill is an acceptable bedding and pipe zone material.

2. Do not backfill until inspected by Engineer.

3.13 OUTLET AND DEVICE BOXES

A. Install suitable for conditions encountered at each outlet or device in wiring or raceway system, consistent with the raceway system, and sized to meet NFPA 70 and NFPA 820 requirements.

B. Size:

1. Depth: Minimum 2 inches, unless otherwise required by structural conditions. Box extensions not permitted.

a. Hollow Masonry Construction: Install with sufficient depth such that conduit knockouts or hubs are in masonry void space.

2. Ceiling Outlet: Minimum 4-inch octagonal device box, unless otherwise required for installed fixture.

3. Switch and Receptacle: Minimum 2-inch by 4-inch device box.

C. Locations:

1. Drawing locations are approximate.
2. To avoid interference with mechanical equipment or structural features, relocate outlets as directed by Engineer.
3. Light Switch: Install on lock side of doors. In case of double doors, install on side with door knob.
4. Light Fixture: Install in symmetrical pattern according to room layout, unless otherwise shown.

D. Mounting Height:

1. General:
   a. Dimensions given to centerline of box.
   b. Where specified heights do not suit building construction or finish, adjust up or down to avoid interference. Do not straddle CMU block or other construction joints.
2. Light Switch: 48 inches above floor.
3. Thermostat: 54 inches above floor.
4. Convenience Receptacle:
   a. General Interior Areas: 15 inches above floor.
   b. Industrial Areas, Workshops: 48 inches above floor.
   c. Outdoor, All Areas: 24 inches above finished grade.
5. Switch, Motor Starting: 48 inches above floor, unless otherwise indicated on Drawings.

E. Install plumb and level.

F. Flush Mounted:

1. Install with concealed conduit.
2. Install proper type extension rings or plaster covers to make edges of boxes flush with finished surface.
3. Holes in surrounding surface shall be no larger than required to receive box.

G. Support boxes independently of conduit by attachment to building structure or structural member.

H. Install bar hangers in frame construction or fasten boxes directly as follows:

1. Wood: Wood screws.
2. Concrete or Brick: Bolts and expansion shields.
3. Hollow Masonry Units: Toggle bolts.
4. Steelwork: Machine screws.

I. Threaded studs driven in by powder charge and provided with lock washers and nuts are acceptable in lieu of expansion shields.

J. Boxes embedded in concrete or masonry need not be additionally supported.

K. Install galvanized mounting hardware in industrial areas.

L. Install separate junction boxes for flush or recessed lighting fixtures where required by fixture terminal temperature.

M. Boxes Supporting Fixtures: Provide means of attachment with adequate strength to support fixture.

N. Open no more knockouts in sheet steel device boxes than are required; seal unused openings.

3.14 JUNCTION AND PULL BOXES

A. Install where shown and where necessary to terminate, tap-off, or redirect multiple conduit runs.

B. Install pull boxes where necessary in raceway system to facilitate conductor installation.

C. Install in conduit runs at least every 150 feet or after the equivalent of three (90 degree) right-angle bends.

D. Use outlet boxes as junction and pull boxes wherever possible and allowed by applicable codes.

E. Use conduit bodies as junction and pull boxes where no splices are required and their use is allowed by applicable codes.

F. Installed boxes shall be accessible with 42 inches minimum clearance in front.

G. Do not install on finished surfaces.

H. Install plumb and level.

I. Support boxes independently of conduit by attachment to building structure or structural member.

J. Install bar hangers in frame construction or fasten boxes directly as follows:

1. Wood: Wood screws.
2. Concrete or Brick: Bolts and expansion shields.
3. Hollow Masonry Units: Toggle bolts.
4. Steelwork: Machine screws.

K. Threaded studs driven in by powder charge and provided with lock washers and nuts are acceptable in lieu of expansion shields.

L. Boxes embedded in concrete or masonry need not be additionally supported.

M. At or Below grade:

1. Install boxes for below grade conduit flush with finished grade in locations outside of paved areas, roadways, or walkways.
2. If adjacent structure is available, box may be mounted on structure surface just above finished grade in accessible but unobtrusive location.
3. Obtain Engineer's written acceptance prior to installation in paved areas, roadways, or walkways.
4. Use boxes and covers suitable to support anticipated weights.

N. Flush Mounted:

1. Install with concealed conduit.
2. Holes in surrounding surface shall be no larger than required to receive box.
3. Make edges of boxes flush with final surface.

O. Mounting Hardware:

1. Noncorrosive Dry Areas: Galvanized.
2. Noncorrosive Wet Areas: Type 304 stainless steel.
3. Corrosive Areas: Type 316 stainless steel.

P. Install Drain/breather fittings in NEMA 250 Type 4 and Type 4X enclosures.

3.15 HANDHOLES

A. Excavate, shore, brace, backfill, and final grade.

B. Do not install until final raceway grading has been determined.

C. Install such that raceways enter at nearly right angles and as near as possible to one end of wall, unless otherwise shown.

D. Identification: Field stamp covers with manhole or handhole number as shown. Stamped numbers to be 1-inch minimum height.

3.16 IDENTIFICATION DEVICES

A. Raceway Tags:

1. Identify in accordance with the Circuit and Raceway Schedule.
2. For exposed raceways, install tags at each terminus, near midpoint, and at minimum intervals of every 50 feet, whether in ceiling space or surface mounted.
3. The Contractor is required to label all conduits and affix the 1 inch brass tag to the conduit within the motor control center and on conduits before they enter a junction box or unit control panel.
4. Provide stainless steel mechanic wire for attachment only.

B. Nameplates shall be permanently affixed to the junction box cover in accordance with the manufacturer's approved methods, to not jeopardize the NEMA rating, and labeled with the nomenclature as illustrated on the construction drawings.

C. Warning Tape: Install approximately 12 inches above underground or concrete-encased raceways. Align parallel to, and within 12 inches of, centerline of runs.

3.17 PROTECTION OF INSTALLED WORK

A. Protect products from effects of moisture, corrosion, and physical damage during construction.

B. Provide and maintain manufactured watertight and dust-tight seals over all conduit openings during construction.

C. Touch up painted conduit threads after assembly to cover nicks or scars.

D. Touch up coating damage to PVC-coated conduit, fittings, and supports with patching compound approved by manufacturer. PVC paint is not acceptable. Compound shall be kept refrigerated according to manufacturers' instructions until time of use.

END OF SECTION

SECTION 16140

WIRING DEVICES

PART 1 - GENERAL

1.1 SUBMITTALS

A. Action Submittals: Manufacturer's product data for wiring devices.

PART 2 - PRODUCTS

2.1 SWITCHES

A. Switch, General Purpose:

1. NEMA WD 1 and FS W-S-896F.
2. Totally enclosed, ac type, with quiet tumbler switch and screw terminal.
3. Rivetless one-piece brass or copper alloy contact arm with silver alloy contact.
4. Capable of controlling 100 percent tungsten filament and fluorescent lamp loads.
5. Rating: 20 amps, 120/277 volts.
6. Automatic grounding clip and integral grounding terminal on mounting strap.
7. Color: Ivory.
8. Manufacturers and Products, Industrial Grade:
    a. Cooper Arrow Hart; AH1220 Series.
    b. Bryant; 4901 Series.
    c. Hubbell; 1221Series.
    d. Leviton; 1221 Series.

B. Switch, Motor Rated:

1. Type: Two-pole or three-pole, manual motor starting/disconnect switch without overload protection.
2. UL 508 listed.
3. Totally enclosed snap-action switch. Quick-make, slow-break design with silver alloy contacts.
4. Minimum General Purpose Rating: 30 amperes, 600V ac.

5. Minimum Motor Ratings:
    a. 2 horsepower for 120V ac, single-phase, two-pole.
    b. 3 horsepower for 240V ac, single-phase, two-pole.
    c. 10 horsepower for 480V ac, three-phase, three-pole.
6. Screw-type terminal.
7. Manufacturers and Products:
    a. Cooper Arrow Hart.
    b. Hubbell Bryant: HBL78 Series.
    c. Leviton.

C. Heavy Duty Safety Switch:
1. Type: Three-pole, manual disconnect switch
2. UL 98 listed.
3. Totally enclosed snap-action switch. Quick-make, quick-break design with silver alloy contacts.

2.2 RECEPTACLES

A. Receptacle, General Purpose:
1. NEMA WD 1 and FS W-C-596G.
2. Duplex, two-pole, three-wire grounding type with screw type wire terminals.
3. Impact resistant nylon cover and body, with finder grooves in face, unless otherwise indicated.
4. One-piece mounting strap with integral ground contact (Rivetless construction).
5. Contact Arrangement: Contact to be made on two sides of each inserted blade without detent.
6. Rating: 125 volts, NEMA WD 1, Configuration 5-20R, 20 amps, unless otherwise indicated.
7. Size: For 2-inch by 4-inch outlet box.
8. Industrial Grade Manufacturers and Products:
    a. Cooper Arrow Hart; 5362 Series.
    b. Hubbell Bryant; HBL5362 Series.
    c. Leviton; 5362 Series.

B. Receptacle, Ground Fault Circuit Interrupter:
1. Meet requirements of general-purpose receptacle.

2. Listed Class A to UL 943, tripping at 5 mA.
3. Rectangular smooth face with push-to-test and reset buttons.
4. Listed weather-resistant in accordance with NEC 406.8.
5. Feed-through Capability: 20 amps.

6. Manufacturers and Products:
    a. Hubbell Bryant; GFTR20 Series.
    b. Cooper Arrow Hart; WRVGF20 Series.
    c. Leviton; 7899 Series.

2.3 HAZARDOUS (CLASSIFIED) LOCATION DEVICES

A. Wiring devices for hazardous (classified) locations shall comply with NEMA FB 11 and UL 1010.

B. Switch:
1. Industrial grade, totally enclosed, ac type, with tumbler switch.
2. Capable of three-way or four-way operation where indicated on Drawings.
3. Rating: 20 amps at 120/277 volts.
4. Material: Cast aluminum backbody and cover.
5. Hazardous Area Ratings: NEMA 7D, suitable for Class I, Group C and Group D locations.
6. Manufacturers and Products:
    a. Killark: XS Series.
    b. Appleton: EDS Series.

C. Switch, Motor Rated:
1. Enclosed manual motor starter-type, three-pole, nonreversing without overloads.
2. Minimum Motor Rating: 10 horsepower, 480V ac, three-phase, three-pole.
3. Enclosure: NEMA 250, Type 7.
4. Operator: External handle with padlocking provisions.
5. Manufacturer and Product: Eaton, Type B101.

D. Receptacles, General:
1. Contain integral switch which must be closed to energize circuit.
2. Design shall permit only an approved plug to be energized.
    a. Actuation of switch shall require plug be inserted and rotated approximately 45 degrees.
    b. Plug shall lock into this position preventing unintended disengagement.
    c. To remove, plug shall be turned opposite direction as engagement and pulled straight out.

E. General Purpose Receptacle, Explosion Proof, 125 Volts, 20 Amps:

1. Dead front, interlocked, circuit breaking.
2. Receptacle Cover: Spring loaded closes when plug is removed.
3. Enclosure: Corrosion-resistant, aluminum alloy with less than 0.4 percent copper.
4. Finish: Electrostatically applied and baked powder epoxy/polyester.
5. External Hardware: Type 316 stainless steel.
6. Switch Chamber: Factory sealed to contain switch's arcing components
7. Hazardous Area Ratings: Suitable for Class I, Division 2 NEMA7D.
8. Manufacturers and Products:
    a. Cooper Crouse-Hinds; Ark Guard 2, Series ENR.
    b. EGS/Appleton Electric; U-Line.
    c. Killark, a division of Hubbell Inc.; UGR/UGP.

F. Ground Fault Circuit Interrupter (GFCI), Explosion-Proof:

1. Meet requirements of general-purpose receptacle, except as otherwise indicated.
2. Hazardous Area Ratings: NEMA 7D, suitable for Class I, Group C and Group D, locations.
3. Provide matching plug with each receptacle.
4. Manufacturers and Products:
    a. Killark; Acceptor series UGFI.
    b. Appleton; EFSXXX-2023GFI.

2.4 DEVICE PLATES

A. Sectional type plate not permitted.

B. Metal:

1. Material: Specification grade, one-piece, 0.040-inch nominal thickness stainless steel.
2. Finish: ASTM A167, Type 302/304, satin.
3. Mounting Screw: Oval-head, finish matched to plate.

C. Cast Metal:

1. Material: Malleable ferrous metal, with gaskets.
2. Screw: Oval-head stainless steel.

D. Sheet Steel:

1. Finish: Zinc electroplate.
2. Screws: Oval-head stainless steel.
3. Manufacturers:
   a. Appleton.
   b. Crouse-Hinds.

E. Weatherproof:

1. Receptacle, Weatherproof Type 1:
   a. Gasketed, cast-aluminum, with individual cap over each receptacle opening.
   b. Mounting Screw and Cap Spring: Stainless steel.
   c. Manufacturers and Products:
      (1) Crouse-Hinds; Type WLRD-1.
      (2) Appleton; Type FSK-WRD.
2. Receptacle, Cover Weatherproof while in use Type 2:
   a. UL listed for wet location while in use.
   b. Die cast metal cover.
   c. Depth: 3.5 inch
   d. Manufacturer and Product: TayMac; Type Multi-Mac or Thomas & Betts
3. Switch:
   a. Gasketed, cast-metal or cast-aluminum, incorporating external operator for internal switch.
   b. Mounting Screw: Stainless steel.
   c. Manufacturers and Products:
      (1) Crouse-Hinds; DS-181 or DS-185.
      (2) Appleton; FSK-1VTS or FSK-1VS.

F. Raised Sheet Metal: 1/2-inch high zinc- or cadmium-plated steel designed for one-piece drawn type sheet steel box.

G. Sheet Steel: Formed sheet steel or Feraloy designed for installation on cast-metal box.

2.5 FINISHES

A. Wiring device catalog numbers specified in this Section do not designate device color. Unless otherwise indicated, or required by code, provide colors as specified below.

B. Wiring Device:

1. Office Areas: Ivory.
2. Other Areas: Gray.

C. Special purpose and hazardous location devices may be manufacturer's standard color (black).

D. Label: Panel board and circuit number, after load balancing has been completed, shall be engraved on a phanolie nameplate and epoxy glued on each switch and receptacle cover.

PART 3 - EXECUTION

3.1 INSTALLATION, GENERAL

A. Comply with NECA 1.

B. Coordination with Other Trades:

1. Ensure device and its box are protected.
2. Keep outlet box free of plaster, drywall joint compound, mortar, cement, concrete, dust, paint, and other material that may contaminate raceway system, conductors, and cables.
3. Install device box in brick or block wall such that cover plate does not cross a joint, unless otherwise indicated. Where indicated or directed to cross joint, trowel joint flush with face of wall.
4. Install wiring device after wall preparation, including painting, is complete.

C. Conductors:

1. Do not strip insulation from conductors until just before they are spliced or terminated on devices.
2. Strip insulation evenly around conductor using tools designed for the purpose. Avoid scoring or nicking of solid wire or cutting strands from stranded wire.
3. Length of free conductors at outlets for devices shall meet provisions of NFPA 70, Article 300, without pigtails.

D. Device Installation:

1. Replace devices that have been in temporary use during construction or that show signs they were installed before building finishing operations were complete.

2. Keep each wiring device in its package or otherwise protected until it is time to connect conductors.
3. Do not remove surface protection, such as plastic film and smudge covers, until last possible moment.
4. Connect devices to branch circuits using pigtails that are not less than 6 inches (150 mm) in length.
5. Use torque screwdriver when a torque is recommended or required by manufacturer.
6. When conductors larger than 12 AWG are installed on 15-amp or 20-amp circuits, splice 12 AWG pigtails for device connections.
7. Tighten unused terminal screws on device.
8. Device Plates:
    a. Do not use oversized or extra deep plate.
    b. Repair wall finishes and remount outlet box when standard device plate does not fit flush or does not cover rough wall opening.
    c. All switch, receptacle, occupancy sensor, and time switch plates shall be permanently identified with the panelboard and circuit number of the power circuit supplying the device. Adhesive tags and labels are not allowed.

3.2 SWITCH INSTALLATION

A. Switch, General Purpose:
1. Install with switch operation in vertical position.
2. Install single-pole, two-way switch such that toggle is in up position when switch is on.

3.3 RECEPTACLE INSTALLATION

A. Duplex Receptacle:
1. Install with grounding slot up, except where horizontal mounting is shown, in which case install with neutral slot up.
2. Weatherproof Receptacle:
    a. Install in cast metal box.
    b. Install such that hinge for protective cover is above receptacle opening.
3. Ground Fault Interrupter: Install feed-through model at locations where ground fault protection is specified for "downstream" conventional receptacles.
4. Special-Purpose Receptacle: Install in accordance with manufacturer's

instructions.

3.4 DEVICE PLATE INSTALLATION

A. Securely fasten to wiring device; ensure tight fit to box.

B. Flush Mounted: Install with all four edges in continuous contact with finished wall surface without use of mat or similar material. Plaster fillings will not be acceptable.

C. Surface Mounted: Plate shall not extend beyond sides of box, unless plate has no sharp corners or edges.

D. Install with alignment tolerance to box of 1/16 inch.

E. Type (Unless Otherwise Shown):

1. Office Areas: Metal.
2. Other Areas: Metal.
3. Exterior:
    a. Switch: Weatherproof.
    b. Receptacle: Weatherproof Type 2.
4. Interior:
    a. Flush-Mounted Box: Metal.
    b. Surface-Mounted, Metal Box: Cast.
    c. General Purpose Areas: Sheet Steel.
    d. Other Areas: Cast.
    e. Surface Mounted, Sheet Steel Box: Raised sheet steel.
    f. Receptacle Shown as Weatherproof on Drawings: Weatherproof Type 2.

3.5 IDENTIFICATION

A. All switch, receptacle, occupancy sensor, and time switch plates shall be permanently identified with the panelboard and circuit number of the power circuit supplying the device.

B. Use engraved nameplates or stamped metallic tags for identification of individual devices. Attach with screws, stainless steel wire, or silicon based adhesive caulk.

C. Where a tag or nameplate is impractical, and only when approved by the District Engineer, identify the device plate with indelible marker using neatly applied block lettering. (Sharpie, fine point, permanent marker)

D. Adhesive tags and labels, and printed tape are not allowed. See Section 26 05 05 – Conductors

E. Identify conductors with durable wire markers or tags inside outlet boxes.

3.6 FIELD QUALITY CONTROL

A. Perform tests and inspections, and prepare test reports.

B. Verify circuit identification on device plate.

C. Test Instrument for 125-Volt 20-Amp Receptacle: Digital wiring analyzer with digital readout or illuminated LED indicators of measurement.

D. Using test plug, verify device and its outlet box are securely mounted.

E. Line Voltage Range: 105 volts to 132 volts.

F. Percent Voltage Drop under 15-Amp Load: Less than 6 percent; 6 percent or higher is not acceptable.

G. Ground Impedance: 2 ohms, maximum.

H. GFCI Trip: Test for tripping values specified in UL 1436 and UL 943.

I. Tests shall be diagnostic, indicating damaged conductors, high resistance at circuit breaker, poor connections, inadequate fault current path, defective devices, or similar problems. Correct circuit conditions, remove malfunctioning units and replace with new ones, and retest as specified above.

END OF SECTION

SECTION 16400

ELECTRICAL DISTRIBUTION EQUIPMENT

PART 1 - GENERAL

1.1 SECTION INCLUDES

A. Panelboards.

B. Circuit breakers.

C. Disconnects.

D. Fuses.

1.2 REFERENCES

A. NEMA AB1 - Molded Case Circuit Breakers.

B. NEMA KS1 - Enclosed Switches.

C. NEMA PB1 - Panelboards.

D. NEMA PB1.1 - Instructions for Safe Installation, Operation and Maintenance of Panelboards Rated 600 Volts or Less.

E. ANSI/UL 198C - High Interrupting Capacity Fuses; Current Limiting Types.

F. ANSI/UL 198E - Class R Fuses.

1.3 SUBMITTALS

A. Panelboards: Shop drawings and product data.

B. Circuit Breakers: Product data, typical test reports.

C. Disconnects: Product data.

D. Fuses: Product data.

PART 2 - PRODUCTS

2.1 ACCEPTABLE MANUFACTURERS

A. Panelboards: Square D, Cutler Hammer, Eaton, or as approved.

B. Circuit Breakers: Square D, Cutler Hammer or as approved

C. Disconnects: Square D, Cutler Hammer or as approved
D. Fuses: Bussman or as approved

2.2 PANELBOARDS

A. General

1. Panelboards shall be surface or flush mounted as shown on the drawings and shall be dead- front, consisting of an enclosure, a removable interior unit, and a removable front cover with door.

2. The panelboards shall be provided with main circuit breakers and number of breakers as shown on the drawings.

3. The panelboard enclosures shall be NEMA Type 12 unless otherwise indicated on the drawings and shall conform to UL Standard UL-50.

4. Enclosures for outdoor installation shall be NEMA Type 3R, fabricated from extra heavy gauge sheet steel, hot-dipped galvanized after fabrication and provided with doors and drip shield.

5. Enclosures shall be provided with hinged cover and lock.

6. All locks shall be keyed alike.

7. Fronts shall be furnished with adjustable trim clamps for securing the front to the box.

8. Size of breakers and rating of main lugs shall be as indicated.

9. Panels shall be for operation on voltage, number of phases, and number of wires shown on the drawings.

10. Multipole circuit breakers shall be the common trip type with a single operating handle.

11. Each panelboard shall be equipped with a full capacity isolated neutral bus and a bonded equipment bus, unless otherwise specified on the drawings.

B. 480V - 120/208V Power Center

1. Bus Bars shall be copper.

2. Branch breakers shall be plug-in type.

C. 277/480 Panelboards

1. Bus Bars shall be copper.

2. Branch breakers shall be plug-in type.

D. Distribution

1. Fronts shall be hinged to box whenever box height is 60" or greater.

2. In addition to the directory, a 1/2 inch high plastic embossed self sticking tape shall be attached next to each branch breaker identifying the breaker function.

3. Bus Bars shall be copper.

E. Directory Holder

1. A directory holder with protective covering shall be provided on the inside of each door and completely labeled by the Contractor.

2. The directory shall be typed.

3. Hand-lettering or marking is not acceptable.

F. Panelboard Schedules

1. Where panelboard schedules are provided, they shall be used by the contractor as a guide for circuitry, phase balancing, and ordering of panelboards.

G. Spare Breakers

1. Each panel shall be provided with a minimum of 25% spare breakers, whether shown on drawing or schedule, proportioned in number to the size or sizes of breakers being used for each frame size.

H. Spaces

1. Each panel shall be provided with a minimum of 25% spaces, whether shown on drawing or schedule.

2. Spaces shall include all necessary bus and accessories, ready to accommodate future breakers.

3. All spaces shall include blank cover.

2.3 CIRCUIT BREAKERS

A. Quick-make, quick-break molded-case circuit breakers, manually operated.
B. Thermal/magnetic indicating type common trips.

C. Shunt trips and other auxiliaries where applicable or indicated.

D. Interrupting rating for circuit breakers in 120/208 volt panels shall be not less than 10,000 amperes RMS Symmetrical.

E. Interrupting rating for circuit breakers in 277/480-volt panels shall be not less than 14,000 amperes RMS symmetrical.

F. Ground fault protection, as scheduled or indicated.

G. Voltage and ampacities, as scheduled or indicated.

H. Circuit breakers shall conform to NEMA Standard AB-1.

I. All 15 and 20 ampere single pole breakers shall be SWD rated.

2.4 DISCONNECTS

A. Fused or unfused ampacities and number of poles, as scheduled, indicated or required.

B. Surface mounted, heavy duty, single throw.

C. Horsepower rated.

D. Positive quick-make, quick-break operating mechanism.

E. Interlocked door and operating handle padlockable in "OFF" position.

F. NEMA 12 enclosures for interior applications, NEMA-3R for exterior applications.

2.5 FUSES

A. UL Class L Fuses: Time delay, highly current limiting use in bolted pressure and high pressure contact switches. 200,000 AIC. **Bussman** low-peak, or as approved.

B. ANSI/UL Class RK5 Fuses: Time delay, for all applications not specified or indicated otherwise. 200,000 AIC. **Bussman** Fustron, or as approved.

PART 3 - EXECUTION

3.1 PANELBOARDS

A. Panelboards shall be installed as shown on the drawings and in accordance with the manufacturer's installation instructions.

B. For flush mounted panelboards, stub extra conduits (25 percent of actual used but not less than 4 each) for future branch circuits. Where conduits are stubbed from the top and bottom of the same panelboard, conduit ends -

either top or bottom, shall be capped.

C. Panelboards shall be mounted so that the height of the top operating handle will not exceed 6 feet from the floor.

D. Ground panelboard enclosure and ground bus.

E. Directories shall be type-written to indicate load served by each circuit and shall be mounted in holder behind protective covering.

3.2 CIRCUIT BREAKERS

A. Group mounted in panelboards or individually mounted in circuit breaker enclosure.

B. Ground circuit breaker enclosures.

3.3 DISCONNECTS

A. Wall mounted at locations indicated.

B. Ground disconnect enclosures.

3.4 FUSES

A. Install in fuse holders so that the ratings are visible from the front.

END OF SECTION

SECTION 16460

DISTRIBUTION TRANSFORMERS

PART 1 - GENERAL

1.1 SECTION INCLUDES

A. Dry-type transformers

1.2 REFERENCES

A. ANSI/NEMA-ST1 - Specialty Transformers.
B. ANSI/NEMA-ST20 - Dry-Type Transformers for General Applications.
C. ANSI/NEMA-TP1 – Guide for Determining Energy Efficiency for Distribution Transformers.

1.3 SUBMITTALS

A. Product Data.

PART 2 - PRODUCTS

2.1 ACCEPTABLE MANUFACTURERS

A. Square D.

B. Acme Electric

C. General Electric.

D. Jefferson.

2.2 QUALITY ASSURANCE

A. Standard cataloged units of manufacturers listed.

2.3 DRY-TYPE TRANSFORMERS

A. General purpose dry-type, outdoor enclosures.

B. Double winding.

C. Electrostatic shield winding where indicated.

D. NEMA taps, two 2-1/2 percent below and two 2-1/2 percent above.

E. Sound Levels:

Transformer Rating	Sound Level
0 – 9 KVA	37 dB
10 – 30 KVA	41 dB
31 – 112-1/2 KVA	45 dB

F. 150 degrees C temperature rise rating and Class 220 insulation.

G. Energy efficient, NEMA TP1 compliant.

H. Refer to drawings for individual transformer ratings.

PART 3 - EXECUTION

3.1 DRY-TYPE TRANSFORMERS

A. Install at locations indicated.

B. Floor mounted, provide 3 inch housekeeping pad and manufacturer recommended anchor bolts, with adequate working and ventilation clearances.

C. Install transformers with sound levels greater than 45 dB on resilient vibration-isolating mountings to prevent amplification of sound.

D. Ground transformer enclosures, secondary neutrals, and shielding.

E. Adjust winding taps to insure proper voltage at end use points.

END OF SECTION

SECTION 16499

COMMISSIONING OF ELECTRICAL SYSTEMS

PART 1 - GENERAL

1.1 SUBMITTALS

A. Informational Submittals:

1. Submit 30 days prior to performing inspections or tests:
    a. Schedule for performing inspection and tests.
    b. List of references to be used for each test.
    c. Sample copy of equipment and materials inspection form(s).
    d. Sample copy of individual device test form.
    e. Sample copy of individual system test form.
2. Submit test or inspection reports and certificates for each electrical item tested within 30 days after completion of test:
3. Operation and Maintenance Data:
    a. In accordance with Section 01400 Operation and Maintenance Manual.
    b. After test or inspection reports and certificates have been reviewed by Engineer and returned, insert a copy of each in Operation and Maintenance Manual.

1.2 QUALITY ASSURANCE

A. Testing Firm Qualifications:

1. Corporately and financially independent organization functioning as an unbiased testing authority.
2. Professionally independent of manufacturers, suppliers, and installers of electrical equipment and systems being tested.
3. Employer of engineers and technicians regularly engaged in testing and inspecting of electrical equipment, installations, and systems.
4. Supervising engineer accredited as Certified Electrical Test Technologist by NICET or NETA and having a minimum of 5 years' testing experience on similar projects.
5. Technicians certified by NICET or NETA.

6. Assistants and apprentices assigned to Project at ratio not to exceed two certified to one noncertified assistant or apprentice.

7. Registered Professional Engineer to provide comprehensive Project report outlining services performed, results of such services, recommendations, actions taken, and opinions.

8. In compliance with OSHA CFR 29, Part 1910.7 criteria for accreditation of testing laboratories or a full member company of NETA.

B. Test equipment shall have an operating accuracy equal to or greater than requirements established by NETA ATS.

C. Test instrument calibration shall be in accordance with NETA ATS. Test equipment shall have been calibrated within 12 months of said test. A calibration sticker shall be affixed to test equipment indicating calibration date.

1.3 SEQUENCING AND SCHEDULING

A. Coordinate testing with other work. Testing, review, and approval shall occur prior to equipment being placed into service. Multiple testing sessions may be required.

B. Perform inspection and electrical tests after equipment listed herein has been installed.

C. Perform tests with apparatus de-energized whenever feasible.

D. Inspection and electrical tests on energized equipment shall be:

1. Scheduled with City prior to de-energization.

2. Minimized to avoid extended period of interruption to the operating plant equipment.

E. Notify Engineer at least 24 hours prior to performing tests on energized electrical equipment.

PART 2 - PRODUCTS (NOT applicable)

PART 3 - EXECUTION

3.1 GENERAL

A. Tests and inspections shall establish:

1. Electrical equipment is operational within industry and manufacturer's tolerances and standards.

2. Installation operates properly.
3. Equipment is suitable for energization.
4. Installation conforms to requirements of Contract Documents and NFPA 70, NFPA 70E, NFPA 101, and IEEE C2.

B. Perform inspection and testing in accordance with NETA ATS, industry standards, and manufacturer's recommendations.

C. Adjust mechanisms and moving parts of equipment for free mechanical movement.

D. Adjust and set electromechanical electronic relays and sensors to correspond to operating conditions, or as recommended by manufacturer.

E. Verify nameplate data for conformance to Contract Documents and approved Submittals.

F. Realign equipment not properly aligned and correct unlevelness.

G. Properly anchor electrical equipment found to be inadequately anchored.

H. Tighten accessible bolted connections, including wiring connections, with calibrated torque wrench/screw driver to manufacturer's recommendations, or as otherwise specified in NETA ATS.

I. Clean contaminated surfaces with cleaning solvents as recommended by manufacturer.

J. Provide proper lubrication of applicable moving parts.

K. Inform Engineer of working clearances not in accordance with NFPA 70.

L. Investigate and repair or replace:
1. Electrical items that fail tests.
2. Active components not operating in accordance with manufacturer's instructions.
3. Damaged electrical equipment.

M. Electrical Enclosures:
1. Remove foreign material and moisture from enclosure interior.
2. Vacuum and wipe clean enclosure interior.
3. Remove corrosion found on metal surfaces.

4. Repair or replace, as determined by City or Engineer, door and panel sections having dented surfaces.
5. Repair or replace, as determined by City or Engineer, poor fitting doors and panel sections.
6. Repair or replace improperly operating latching, locking, or interlocking devices.
7. Replace missing or damaged hardware.
8. Finish:
    a. Provide matching paint and touch up scratches and mars.
    b. If required due to extensive damage, as determined by City or Engineer, refinish entire assembly.

N. Replace fuses and circuit breakers that do not conform to size and type required by the Contract Documents or approved Submittals.

O. Replace transformer insulating oil not in compliance with ASTM D923.

3.2 CHECKOUT AND STARTUP

A. Voltage Field Test:
1. Check voltage at point of termination of power company supply system to Project when installation is essentially complete and is in operation.
2. Check voltage amplitude and balance between phases for loaded and unloaded conditions.
3. Record supply voltage (all three phases simultaneously on same graph) for 24 hours during normal working day.
    a. Submit Voltage Field Test Report within 5 days of test.
4. Unbalance Corrections:
    a. Make written request to power company to correct condition if balance (as defined by NEMA) exceeds 1 percent, or if voltage varies throughout the day and from loaded to unloaded condition more than plus or minus 4 percent of nominal.
    b. Obtain written certification from responsible power company official that voltage variations and unbalance are within their normal standards if corrections are not made.

B. Equipment Line Current Tests:
1. Check line current in each phase for each piece of equipment.

2. Make line current check after power company has made final adjustments to supply voltage magnitude or balance.

3. If phase current for a piece of equipment is above rated nameplate current, prepare Equipment Line Phase Current Report that identifies cause of problem and corrective action taken.

3.3 LOW VOLTAGE CABLES, 600 VOLTS MAXIMUM

A. Visual and Mechanical Inspection:

1. Inspect each individual exposed power cable for:

   a. Physical damage.

   b. Proper connections in accordance with single-line diagram.

   c. Cable bends not in conformance with manufacturer's minimum allowable bending radius where applicable.

   d. Color coding conformance with specification.

   e. Proper circuit identification.

2. Mechanical Connections For:

   a. Proper lug type for conductor material.

   b. Proper lug installation.

   c. Bolt torque level in accordance with NETA ATS, Table 100.12, unless otherwise specified by manufacturer.

3. Shielded Instrumentation Cables For:

   a. Proper shield grounding.

   b. Proper terminations.

   c. Proper circuit identification.

4. Control Cables For:

   a. Proper termination.

   b. Proper circuit identification.

5. Cables Terminated Through Window Type CTs: Verify neutrals and grounds are terminated for correct operation of protective devices.

B. Electrical Tests for Conductors:

1. Insulation Resistance Tests:

   a. Utilize 1,000-volt dc megohmmeter for 600-volt insulated conductors and 500-volt megohmmeter for 300-volt insulated conductors.

b. Test each conductor with respect to ground and to adjacent conductors for 1 minute.

c. Evaluate resistance values by comparison with conductors of same length and type.

d. Investigate values less than 50 megohms.

2. Continuity test by ohmmeter method to ensure proper cable connections.

C. Low-voltage cable tests may be performed by installer in lieu of independent testing firm. All tests shall be performed in the presence of the City or Engineer or inspector, documented and submitted for review.

3.4 SAFETY SWITCHES, 600 VOLTS MAXIMUM

A. Visual and Mechanical Inspection:

1. Proper blade pressure and alignment.

2. Proper operation of switch operating handle.

3. Adequate mechanical support for each fuse.

4. Proper contact-to-contact tightness between fuse clip and fuse.

5. Cable connection bolt torque level in accordance with NETA ATS, Table 100.12.

6. Proper phase barrier material and installation.

7. Verify fuse sizes and types correspond to one-line diagram or approved Submittals.

8. Perform mechanical operational test and verify interlocking system operation and sequencing.

B. Electrical Tests:

1. Insulation Resistance Tests:

a. Applied megohmmeter dc voltage in accordance with NETA ATS, Table 100.1.

b. Phase-to-phase and phase-to-ground for 1 minute on each pole.

c. Insulation resistance values equal to, or greater than, resistance values established by manufacturer.

2. Contact Resistance Tests:

a. Contact resistance in microhms across each switch blade and fuse holder.

b. Investigate deviation of 50 percent or more from adjacent poles or similar switches.

3.5 MOLDED AND INSULATED CASE CIRCUIT BREAKERS

A. General: Inspection and testing limited to circuit breakers rated 70 amperes and larger and to motor circuit protector breakers rated 50 amperes and larger.

B. Visual and Mechanical Inspection:

1. Proper mounting.
2. Proper conductor size.
3. Feeder designation according to nameplate and one-line diagram.
4. Cracked casings.
5. Connection bolt torque level in accordance with NETA ATS, Table 100.12.
6. Operate breaker to verify smooth operation.
7. Compare frame size and trip setting with circuit breaker schedules or one-line diagram.
8. Verify that terminals are suitable for 75 degrees C rated insulated conductors.

C. Electrical Tests:

1. Insulation Resistance Tests:
   a. Utilize 1,000-volt dc megohmmeter for 480-volt and 600-volt circuit breakers.
   b. Pole-to-pole and pole-to-ground with breaker contacts opened for 1 minute.
   c. Pole-to-pole and pole-to-ground with breaker contacts closed for 1 minute.
   d. Test values to comply with NETA ATS, Table 100.1.
2. Contact Resistance Tests:
   a. Contact resistance in microhms across each pole.
   b. Investigate deviation of 50 percent or more from adjacent poles and similar breakers.
3. Primary Current Injection Test to Verify:
   a. Long-time minimum pickup and delay.
   b. Short-time pickup and delay.
   c. Ground fault pickup and delay.

d. Instantaneous pickup by run-up or pulse method.

e. Trip characteristics of adjustable trip breakers shall be within manufacturer's published time-current characteristic tolerance band, including adjustment factors.

f. Trip times shall be within limits established by NEMA AB 4, Table 5-3. Alternatively, use NETA ATS, Table 100.7.

g. Instantaneous pickup value shall be within values established by NEMA AB 4, Table 5-4. Alternatively, use NETA ATS, Table 100.8.

3.6 GROUNDING SYSTEMS

A. Visual and Mechanical Inspection:

1. Equipment and circuit grounds in motor control center, panelboard, switchboard, and switchgear assemblies for proper connection and tightness.

2. Ground bus connections in motor control center, panelboard, switchboard, and switchgear assemblies for proper termination and tightness.

3. Effective transformer core and equipment grounding.

4. Accessible connections to grounding electrodes for proper fit and tightness.

5. Accessible exothermic-weld grounding connections to verify that molds were fully filled and proper bonding was obtained.

B. Electrical Tests:

1. Fall-of-Potential Test:

a. In accordance with IEEE 81, Section 8.2.1.5 for measurement of main ground system's resistance.

b. Main ground electrode system resistance to ground to be no greater than 3 ohm(s).

2. Two-Point Direct Method Test:

a. In accordance with IEEE 81, Section 8.2.1.1 for measurement of ground resistance between main ground system, equipment frames, and system neutral and derived neutral points.

b. Equipment ground resistance shall not exceed main ground system resistance by 0.25 ohm.

END OF SECTION

APPENDIX A

TrojanUV Layout Drawings, Revision D

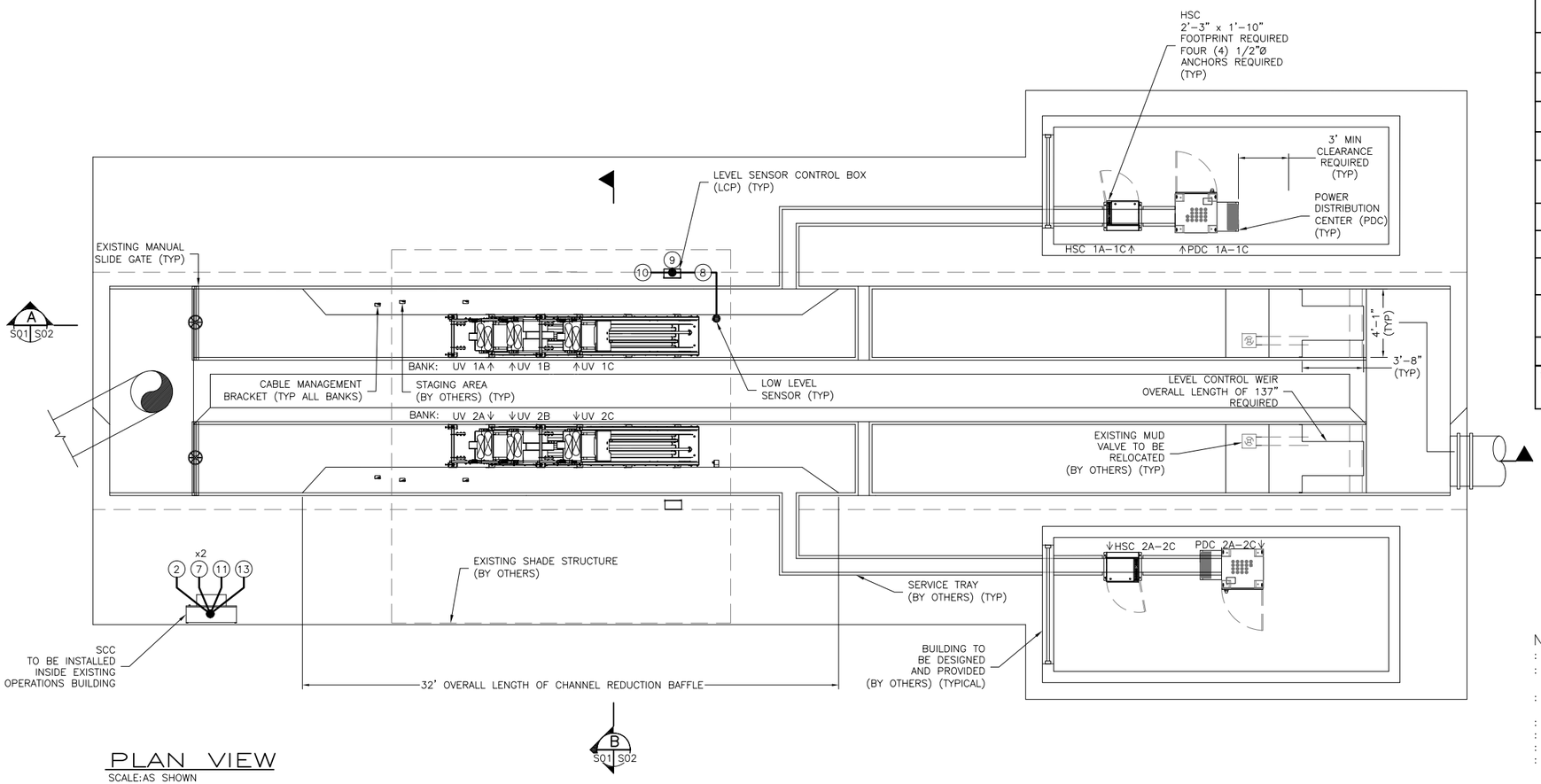

PLAN VIEW
SCALE:AS SHOWN

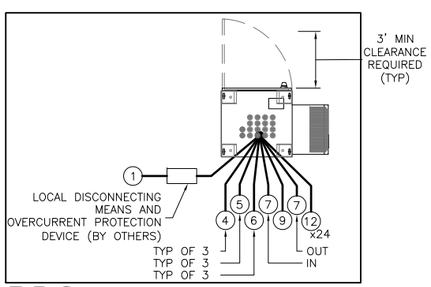

PDC INTERCONNECT DETAIL
SCALE:NOT TO SCALE

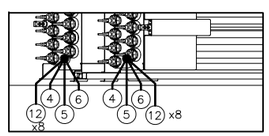

UV BANK INTERCONNECT DETAIL
SCALE:NOT TO SCALE
NOTE: TYPICAL FOR ALL UV BANKS.
TROUGH NOT SHOWN FOR CLARITY.

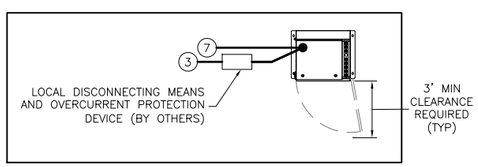

HSC INTERCONNECT DETAIL
SCALE:NOT TO SCALE

TROJAN UVSIGNA™
EQUIPMENT INTERCONNECTIONS

No.	DESCRIPTION	FROM	TO
1	POWER DISTRIBUTION CENTER (PDC)* POWER SUPPLY 480Y/277V, 3 PHASE, 4 WIRE + GROUND 34 AMPS MAXIMUM CURRENT/PHASE 27.4 kVA/PDC POWER DRAW	DISTRIBUTION PANEL (DP) (BY OTHERS) (NOT SHOWN)	PDC(s) (TOP OF PANEL)
2	SYSTEM CONTROL CENTER (SCC)* POWER SUPPLY 120V, 1 PHASE, 2 WIRE + GROUND, 1.5 kVA	DP (BY OTHERS) (NOT SHOWN)	SCC
3	HYDRAULIC SYSTEM CENTER (HSC)* POWER SUPPLY 480V, 3 PHASE, 3 WIRE + GROUND, 2.5 kVA	DP (BY OTHERS) (NOT SHOWN)	HSC
4	BONDING CONDUCTOR 8 AWG TYPE TWH STRANDED	PDC(s) (UNDERSIDE OF PANEL)	UV BANK(s)
5	UV INTENSITY 4-20MA ANALOG INPUT (SUPPLIED)	UV BANK(s)	PDC(s) (UNDERSIDE OF PANEL)
6	BANK IN PLACE PROXIMITY SENSOR 3 CONDUCTOR CABLES (SUPPLIED)	PROXIMITY SENSOR(s)	PDC(s) (UNDERSIDE OF PANEL)
7	MODBUS BELDEN 3106A OR EQUIVALENT (ONE LINE PER CHANNEL)	SCC	HSC(s) & PDC(s) (UNDERSIDE OF PANEL) (DAISY CHAINED)
8	DISCRETE LOW LEVEL SIGNAL 12 VDC – 2 CONDUCTORS	LOW LEVEL SENSOR	LEVEL SENSOR CONTROL BOX (LCP)
9	DISCRETE WATER LEVEL SIGNAL 2 CONDUCTORS	LEVEL SENSOR CONTROL BOX (LCP)	PDC(s) (UNDERSIDE OF PANEL)
10	LEVEL SENSOR CONTROL BOX (LCP)* POWER SUPPLY 120V, 1 PHASE, 2 WIRE + GROUND, 0.12 kVA	DP (BY OTHERS) (NOT SHOWN)	LEVEL SENSOR CONTROL BOX (LCP)
11	FLOW METER 4-20 mA, DC ANALOG INPUT (BY OTHERS)	FLOW METER PANEL (NOT SHOWN) (BY OTHERS)	SCC
12	LAMP CABLES (SUPPLIED BY TROJAN) (ROUTED BY OTHERS)	UV BANK	PDC (UNDERSIDE OF PANEL)
13	ETHERNET/IP COMMUNICATION	SCC	PLANT SCADA (BY OTHERS) (NOT SHOWN)

*** GROUND CONNECTION REQUIRED TO PLANT GRID (BY OTHERS).**

NOTES:
: DO NOT SLOPE CHANNEL FLOOR.
: CHANNEL WIDTH MUST BE KEPT WITHIN A TOLERANCE OF −/+1½" AT UV BANK FRAME AND −/+¼" FOR REST OF CHANNEL.
: ALL CHANNEL ELEVATIONS MUST BE KEPT WITHIN A TOLERANCE OF −/+¼" AGAINST A COMMON DATUM ELEVATION.
: ANCHOR BOLTS ARE NOT SUPPLIED BY TROJAN TECHNOLOGIES,
: SYSTEM CONDUIT, WIRING, DISTRIBUTION PANELS & INTERCONNECTIONS BY OTHERS.
: ELECTRICAL REQUIREMENTS SHOWN ARE TO SUPPLY TROJAN UV EQUIPMENT ONLY.
: REMOVABLE GRATING SECTIONS SHALL BE EASILY REMOVED BY ONE PERSON. MAXIMUM WEIGHT OF THE SECTIONS SHALL BE IN ACCORDANCE WITH REQUIREMENTS OF THE APPLICABLE JURISDICTION.
: CONTRACTOR TO REVIEW ALL TROJAN TECHNOLOGIES INSTALLATION INSTRUCTIONS PRIOR TO EQUIPMENT INSTALLATION.
: EFFLUENT LEVELS SHOWN REFLECT HYDRAULICS ASSOCIATED WITH TROJAN EQUIPMENT ONLY. EFFLUENT LEVELS MAY BE ALTERED DUE TO CHANNEL DEBRIS OR GEOMETRY.
: HYDRAULIC HOSE ELEVATIONS NOT TO EXCEED 12" ABOVE HSC MOUNTING ELEVATION.
: INCLUDED CABLE LENGTH ALLOWS FOR 77.5' ROUTING (RISE + RUN) BETWEEN CABLE/HOSE MANAGEMENT BRACKET AND UNDERSIDE OF PDC. (67.0' ROUTING ASSUMED BASED ON THIS LAYOUT.)
: INCLUDED HOSE LENGTH ALLOWS FOR 80' ROUTING (RISE + RUN) BETWEEN HYD CYLINDERS AND HOSE CONNECTION ON THE HSC.
: SITE TO PROVIDE APPROVED (ENGINEERED) ANCHOR POINTS FOR PERSONNEL TO USE AS PART OF THEIR FALL RESTRAINT SYSTEM AROUND OPEN CHANNELS. THE ANCHOR POINTS MUST BE POSITIONED SO THAT THE PREFERRED RETRACTABLE LIFELINE OF 8 FEET IS OF SUFFICIENT LENGTH TO ACCESS THE WORK AT THE CHANNEL.
**** SOLID GRATING REQUIRED TO BLOCK ULTRAVIOLET (UV) LIGHT.**

(1 DUTY/ 1 REDUNDANT CHANNEL)

DESIGN CRITERIA		
	PEAK FLOW	8 MGD
	U.V TRANSMITTANCE AT 253.7 nm	62%
	SUSPENDED SOLIDS	30 mg / L
	DISINFECTION STANDARD	200 FC / 100mL (30 DAY GEO MEAN)

TROJANUV
A TROJAN TECHNOLOGIES BUSINESS
CONFIDENTIALITY NOTICE
Copyright© 2023 by Trojan Technologies. All rights reserved. No part of this document may be reproduced, stored in a retrieval system, or transmitted in any form, without the written permission of Trojan Technologies.

DESCRIPTION: LAYOUT, TROJANUVSIGNA EL CENTRO, CA		QUOTE NO.	229392
DRAWN BY : JRN	DATE : 24MR19	PROJECT NO.	810206
CHECKED BY : SPM	DATE : 24MR19	DWG NO. S01	REV. D
APPROVED BY : HM	DATE : 24MR25		
SCALE (11x17) : 1/8" = 1'-0"	LOG NUMBER : N/A		

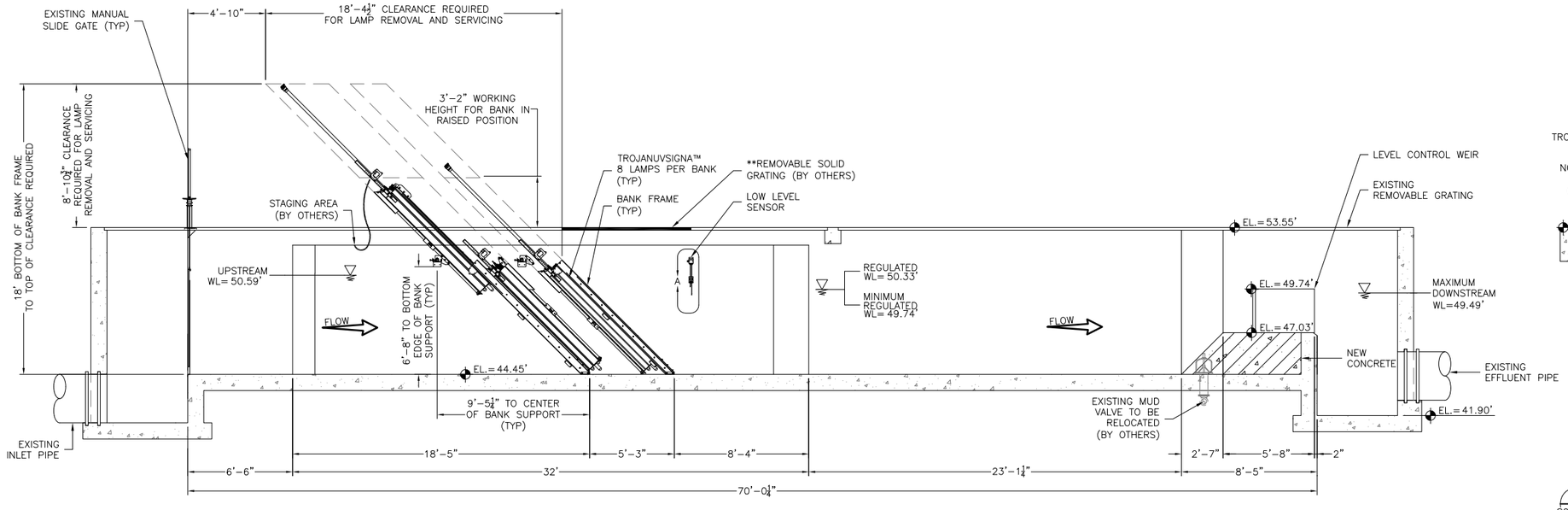

A SECTION

S01 S02 SCALE: AS SHOWN

NOTE: BUILDING (BY OTHERS), AND LEVEL SENSOR CONTROL BOX NOT SHOWN FOR CLARITY

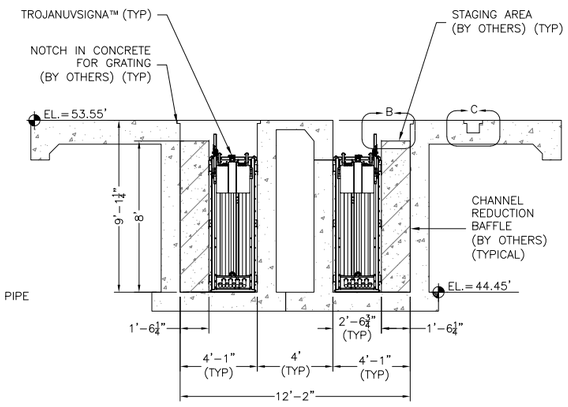

B SECTION

S01 S02 SCALE: AS SHOWN

NOTE: EXISTING SHADE STRUCTURE, MANUAL SLIDE GATE, EXISTING UV4000 SYSTEM NOT SHOWN FOR CLARITY.

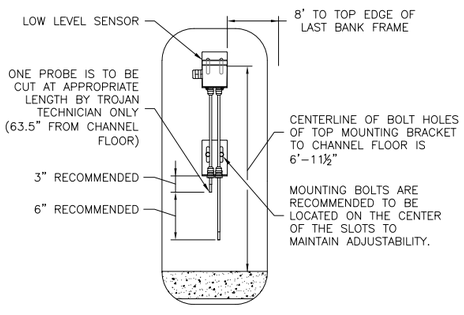

DETAIL A

SCALE:NOT TO SCALE

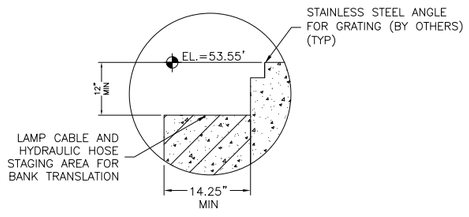

DETAIL B

SCALE:NOT TO SCALE

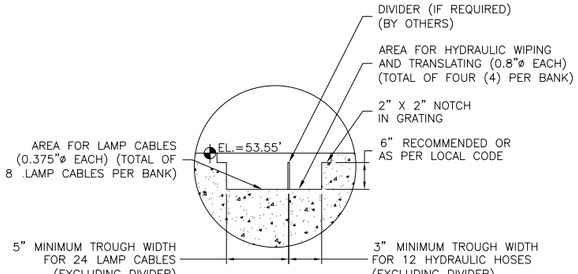

DETAIL C

SCALE:NOT TO SCALE

NOTE: REFER TO TROJAN TROUGH CABLE INSTALLATION GUIDELINE DC000601-017 OR LOCAL CODE IF MORE RESTRICTIVE. TROUGH WIDTHS BASED ON SOLID STYLE GRATING.

NOTES:

: DO NOT SLOPE CHANNEL FLOOR.

: CHANNEL WIDTH MUST BE KEPT WITHIN A TOLERANCE OF −/+1½" AT UV BANK FRAME AND −/+¼" FOR REST OF CHANNEL.

: ALL CHANNEL ELEVATIONS MUST BE KEPT WITHIN A TOLERANCE OF −/+¼" AGAINST A COMMON DATUM ELEVATION.

: ANCHOR BOLTS ARE NOT SUPPLIED BY TROJAN TECHNOLOGIES,

: SYSTEM CONDUIT, WIRING, DISTRIBUTION PANELS & INTERCONNECTIONS BY OTHERS.

: ELECTRICAL REQUIREMENTS SHOWN ARE TO SUPPLY TROJAN UV EQUIPMENT ONLY.

: REMOVABLE GRATING SECTIONS SHALL BE EASILY REMOVED BY ONE PERSON. MAXIMUM WEIGHT OF THE SECTIONS SHALL BE IN ACCORDANCE WITH REQUIREMENTS OF THE APPLICABLE JURISDICTION.

: CONTRACTOR TO REVIEW ALL TROJAN TECHNOLOGIES INSTALLATION INSTRUCTIONS PRIOR TO EQUIPMENT INSTALLATION.

: EFFLUENT LEVELS SHOWN REFLECT HYDRAULICS ASSOCIATED WITH TROJAN EQUIPMENT ONLY. EFFLUENT LEVELS MAY BE ALTERED DUE TO CHANNEL DEBRIS OR GEOMETRY.

: HYDRAULIC HOSE ELEVATIONS NOT TO EXCEED 12" ABOVE HSC MOUNTING ELEVATION.

: INCLUDED CABLE LENGTH ALLOWS FOR 77.5' ROUTING (RISE + RUN) BETWEEN CABLE/HOSE MANAGEMENT BRACKET AND UNDERSIDE OF PDC. (67.0' ROUTING ASSUMED BASED ON THIS LAYOUT.)

: INCLUDED HOSE LENGTH ALLOWS FOR 80' ROUTING (RISE + RUN) BETWEEN HYD CYLINDERS AND HOSE CONNECTION ON THE HSC.

: SITE TO PROVIDE APPROVED (ENGINEERED) ANCHOR POINTS FOR PERSONNEL TO USE AS PART OF THEIR FALL RESTRAINT SYSTEM AROUND OPEN CHANNELS. THE ANCHOR POINTS MUST BE POSITIONED SO THAT THE PREFERRED RETRACTABLE LIFELINE OF 8 FEET IS OF SUFFICIENT LENGTH TO ACCESS THE WORK AT THE CHANNEL.

**** SOLID GRATING REQUIRED TO BLOCK ULTRAVIOLET (UV) LIGHT.**

TROJANUV

A TROJAN TECHNOLOGIES BUSINESS

CONFIDENTIALITY NOTICE
Copyright@ 2023 by Trojan Technologies. All rights reserved. No part of this document may be reproduced, stored in a retrieval system, or transmitted in any form, without the written permission of Trojan Technologies.

DESCRIPTION: LAYOUT, TROJANUVSIGNA EL CENTRO, CA

QUOTE NO. 229392

PROJECT NO. 810206

DRAWN BY : JRN	DATE : 24MR19
CHECKED BY : SPM	DATE : 24MR19
APPROVED BY : HM	DATE : 24MR25
SCALE (11x17) : 1/8" = 1'-0"	LOG NUMBER : N/A

DWG NO. S02 REV. D

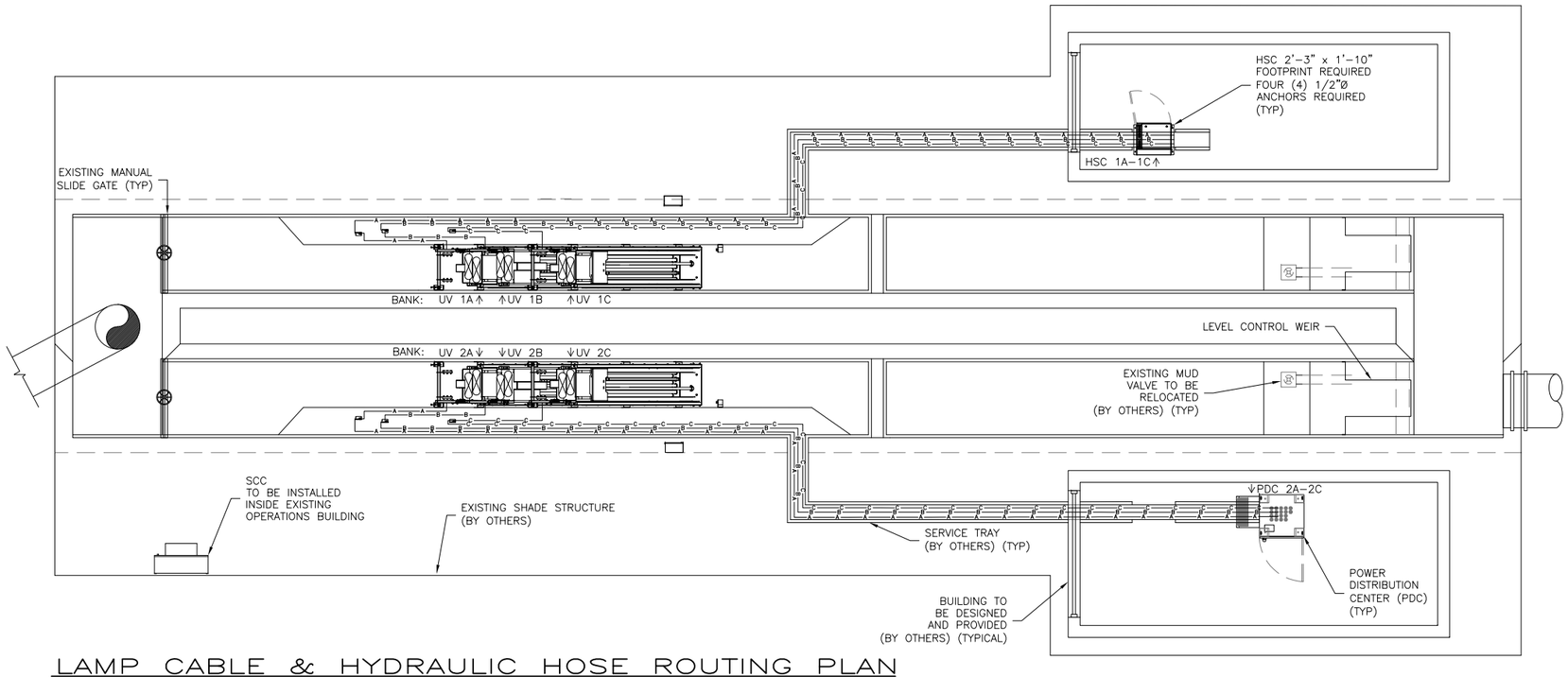

LAMP CABLE & HYDRAULIC HOSE ROUTING PLAN

SCALE: AS SHOWN
NOTE: PDC NOT SHOWN FOR CLARITY.

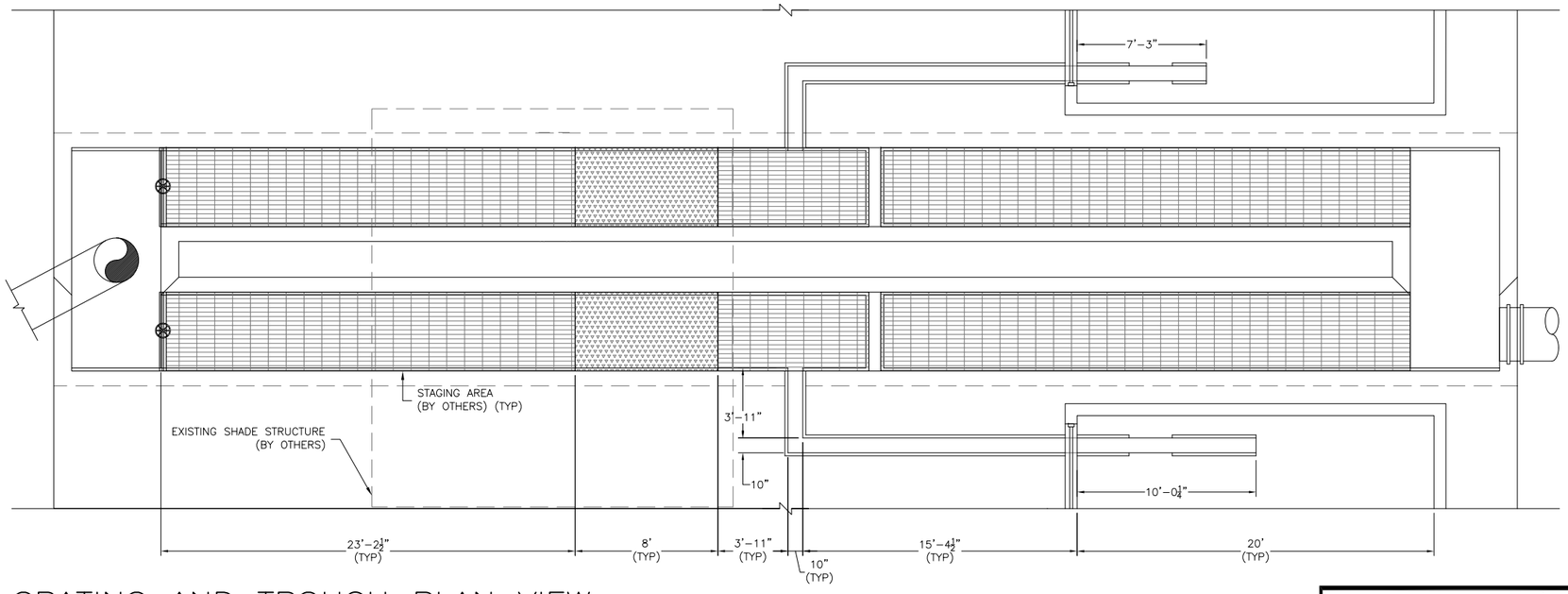

GRATING AND TROUGH PLAN VIEW

SCALE:AS SHOWN
NOTE: DESIGN OF GRATING SECTIONS SHOULD BE SIZED TO ALLOW FOR EASY REMOVAL BY SERVICE TECHNICIANS. SOLID GRATING MUST BE PROVIDED IN AREA INDICATED TO BLOCK UV LIGHT.

NOTES:

: DO NOT SLOPE CHANNEL FLOOR.
: CHANNEL WIDTH MUST BE KEPT WITHIN A TOLERANCE OF −/+1½" AT UV BANK FRAME AND −/+¼" FOR REST OF CHANNEL.
: ALL CHANNEL ELEVATIONS MUST BE KEPT WITHIN A TOLERANCE OF −/+¼" AGAINST A COMMON DATUM ELEVATION.
: ANCHOR BOLTS ARE NOT SUPPLIED BY TROJAN TECHNOLOGIES,
: SYSTEM CONDUIT, WIRING, DISTRIBUTION PANELS & INTERCONNECTIONS BY OTHERS.
: ELECTRICAL REQUIREMENTS SHOWN ARE TO SUPPLY TROJAN UV EQUIPMENT ONLY.
: REMOVABLE GRATING SECTIONS SHALL BE EASILY REMOVED BY ONE PERSON. MAXIMUM WEIGHT OF THE SECTIONS SHALL BE IN ACCORDANCE WITH REQUIREMENTS OF THE APPLICABLE JURISDICTION.
: CONTRACTOR TO REVIEW ALL TROJAN TECHNOLOGIES INSTALLATION INSTRUCTIONS PRIOR TO EQUIPMENT INSTALLATION.
: EFFLUENT LEVELS SHOWN REFLECT HYDRAULICS ASSOCIATED WITH TROJAN EQUIPMENT ONLY. EFFLUENT LEVELS MAY BE ALTERED DUE TO CHANNEL DEBRIS OR GEOMETRY.
: HYDRAULIC HOSE ELEVATIONS NOT TO EXCEED 12" ABOVE HSC MOUNTING ELEVATION.
: INCLUDED CABLE LENGTH ALLOWS FOR 77.5' ROUTING (RISE + RUN) BETWEEN CABLE/HOSE MANAGEMENT BRACKET AND UNDERSIDE OF PDC. (67.0' ROUTING ASSUMED BASED ON THIS LAYOUT.)
: INCLUDED HOSE LENGTH ALLOWS FOR 80' ROUTING (RISE + RUN) BETWEEN HYD CYLINDERS AND HOSE CONNECTION ON THE HSC.
: SITE TO PROVIDE APPROVED (ENGINEERED) ANCHOR POINTS FOR PERSONNEL TO USE AS PART OF THEIR FALL RESTRAINT SYSTEM AROUND OPEN CHANNELS. THE ANCHOR POINTS MUST BE POSITIONED SO THAT THE PREFERRED RETRACTABLE LIFELINE OF 8 FEET IS OF SUFFICIENT LENGTH TO ACCESS THE WORK AT THE CHANNEL.
** SOLID GRATING REQUIRED TO BLOCK ULTRAVIOLET (UV) LIGHT.

TROJANUV
A TROJAN TECHNOLOGIES BUSINESS

CONFIDENTIALITY NOTICE

Copyright@ 2023 by Trojan Technologies. All rights reserved. No part of this document may be reproduced, stored in a retrieval system, or transmitted in any form, without the written permission of Trojan Technologies.

DESCRIPTION: LAYOUT, TROJANUVSIGNA EL CENTRO, CA		QUOTE NO. 229392	
DRAWN BY : JRN	DATE : 24MR19	PROJECT NO. 810206	
CHECKED BY : SPM	DATE : 24MR19		
APPROVED BY : HM	DATE : 24MR25	DWG NO. S03	REV. D
SCALE (11x17) : 1/8" = 1'-0"	LOG NUMBER : N/A		

APPENDIX B

TrojanUV Submittal, Revision C

SUBMITTAL

El Centro, CA
810206

TROJANUV3000PLUS™

IMPORTANT CONTACTS

HEAD OFFICE - CANADA

Trojan Technologies
3020 Gore Road,
London, Ontario,
Canada, N5V 4T7
Tel.: +519 457 3400
Fax: +519 457 3030
http://www.trojanuv.com

TOLL FREE NUMBER:
1-800-291-0218
TOLL FREE FAX NUMBER:
1-800-291-0083

If you are unable to reach your Local Representative and have a TECHNICAL EMERGENCY, contact TROJAN TECHNOLOGIES' TECHNICAL ASSISTANCE CENTER:
Toll Free Phone: 1-866-388-0488
Email: TAC@Trojanuv.com

TROJAN UV™

Water Confidence™

Document #: SU810206	**Completed By: ADG**	**Date: 23AP10**
Customer Revision: C	**Checked By: JRN**	**Date: 23AP12**
	Approved By: HM	**Date: 23AP12**

The UV System in this manual may be protected by one or more patents in the United States of America, Canada, and/or other countries. For a list of patents owned by Trojan Technologies, go to www.trojanuv.com.

COPYRIGHT © 2023 by Trojan Technologies
ALL RIGHTS RESERVED

No part of this publication may be reproduced, stored in a retrieval system, or transmitted in any form or by any means without written permission of Trojan Technologies.

TABLE OF CONTENTS

OVERVIEW
Company Background
Certificates
- ISO 9001 Certificate of Registration
- ISO 14001 Certificate of Registration

PROJECT & SYSTEM DESCRIPTION
Project Description
System Description

PRODUCT INFORMATION
Product Operations and Maintenance Manual
Water Level Control Device - Installation and Operation and Maintenance Manual (Weir)
Instruction, Level Sensor Control Box O&M / Installation
Instruction, TrojanUV Solo Lamp™ Cable Routing Inside PDC
Instruction, TrojanUV Hose Assembly Field Connection
TrojanUV - Instruction, Reference Sensor Procedure
Instruction, TrojanUV Solo Lamp™ Cable Installation Guideline
UV4000 Removal Instructions

INSTRUMENTATION DRAWINGS & CUT SHEETS
Electrode Water Level Sensor
UV Intensity Sensor
Bank in Place Proximity Sensor

MECHANICAL DRAWINGS & CUT SHEETS
Operator's Kit
Hose Kit
Warning Sign UV Light
Lamp Specification
Lamp Driver Specification
Solo™ Lamp Sleeve, SG0031D01 - Rev B
Cable Management - Spiral Wrap

ELECTRICAL DRAWINGS & CUT SHEETS

System Control Center (SCC)

- 3410090 - Rev. A
- Bill of Materials / Catalogue Data (Major Components Only)

Power Distribution Center (PDC)

- 341010 - Rev. A
- Bill of Materials / Catalogue Data (Major Components Only)

Hydraulic System Center (HSC)

- E810206H1 - Rev. A
- E810206H2 - Rev. A
- SG0024 - HSC G4 Assy - Rev. C
- 907717C, Sheet 15 - Wiper/Lift Hydraulic Diagram - Rev. AA
- Bill of Materials / Catalogue Data (Major Components Only)

Level Sensor Control Box (LCP)

- 340393G - Rev. G
- Bill of Materials / Catalogue Data (Major Components Only)

CONTROLS PHILOSOPHY

CP810206 - Rev 1.1

CALCULATIONS & CERTIFICATIONS

Calculations

- TrojanUVSigna™ Headloss Calculation
- TrojanUVSigna™ Dose Calculation

Certifications

- TrojanUVSigna™ Validation Test Certification
- TrojanUVSolo™ Lamp 1000W PSS Measurement
- TrojanUVSolo™ End of Lamp Life Factor Letter
- TrojanUVSolo™ Fouling Factor Letter

WARRANTIES

Equipment Limited Warranty
Amalgam Lamp Limited Warranty
Lamp Driver Limited Warranty
UV Intensity Limited Warranty
Performance Guarantee
Warranty Claim Form
Lamp Recycling Program & Form

SAFETY DATA SHEETS (SDS)

Hg Lamps
ActiClean™ Gel
Mobil DTE 10 Excel 15
Food Machinery Grease

OVERVIEW

SECTION CONTENTS

Company Background

Certificates

- **ISO 9001 Certificate of Registration**
- **ISO 14001 Certificate of Registration**

Company Background

Trojan Technologies is part of Danaher Corporation's environmental platform. Danaher is a Fortune 200, global science and technology leader.

Trojan Technologies encompasses six businesses: Aquafine, Trojan Marinex, TrojanUV, Salsnes Filter, US Peroxide and VIQUA. The products and services provided by these businesses play vital roles in making various stages of the water treatment process more effective, efficient and sustainable.

Aquafine Aquafine's advanced UV water treatment systems meet the changing requirements and needs of a diverse customer base around the world. They provide UV solutions for TOC reduction, chlorine and chloramine destruction, ozone destruction and disinfection for many applications in the industrial/commercial sector.	Aquafine™
Salsnes Filter Salsnes Filter's patented filter technology removes particles from municipal and industrial process water. Industries such as food, paper, cruise lines and aquaculture use the fully-automated treatment technology to treat effluent, improve the quality of influent or enhance the utilization of raw materials.	salsnes Filter™
Trojan Marinex Trojan Marinex is dedicated to the development of ballast water treatment solutions. Having direct access to decades of industry-defining water treatment expertise has enabled them to develop a suite of systems unlike any other. These systems are purpose-built for the marine environment and provide filtration + ultraviolet disinfection in a single, compact unit.	TROJAN marinex™
TrojanUV TrojanUV designs, manufactures and sells pressurized and open-channel UV disinfection systems for municipal wastewater and drinking water, and UV-oxidation systems for environmental contaminant treatment applications.	TROJAN UV™
US Peroxide US Peroxide provides performance-driven, full-service environmental treatment programs to help purify water, wastewater, soil and air. Applications include turn-key odor and corrosion control solutions for municipal wastewater and drinking water treatment; refinery, gas, oil and petrochemical wastewater applications; industrial wastewater and air quality treatment; in-situ remediation; and UV-oxidation.	USP technologies™ Solutions for a clean environment

VIQUA	
VIQUA is a leading water treatment technology company focused on providing customers with confidence in their water. In over 100 countries, VIQUA UV systems are disinfecting water in homes, apartment complexes, manufacturing facilities, campgrounds, resorts, hotels and hospitals.	

Trojan Technologies continually strives to develop industry-defining technology, making a significant investment each year to ensure unparalleled discovery and development (~5.0% annual investment in R&D).

The Trojan Technologies mission statement:

We enable customers to meet their water quality objectives by providing eco-efficient solutions that reduce and recover costs, energy, resources and space.

Collaboratively solving problems with our customers, we deliver low-risk, innovative technologies that offer sustainable results.

We ensure greater water confidence and environmental stewardship for people, industries and municipalities, improving the lives of over one billion people globally.

Certificates

The certificates are included on the following pages.

Certificate of Registration

QUALITY MANAGEMENT SYSTEM - ISO 9001:2015

This is to certify that:

Trojan Technologies
3020 Gore Road
London
Ontario
N5V 4T7
Canada

Holds Certificate No: **FM 63961**

and operates a Quality Management System which complies with the requirements of ISO 9001:2015 for the following scope:

Research, design, engineering, manufacturing, sales and service of ultraviolet (UV) water treatment solutions for municipal, industrial, light commercial and residential applications.

For and on behalf of BSI:

Carlos Pitanga, Chief Operating Officer Assurance – Americas

Original Registration Date: 1998-03-27
Effective Date: 2021-07-11
Latest Revision Date: 2021-07-06
Expiry Date: 2024-07-10

Page: 1 of 1

...making excellence a habit.™

This certificate remains the property of BSI and shall be returned immediately upon request.
An electronic certificate can be authenticated online. Printed copies can be validated at www.bsigroup.com/ClientDirectory
To be read in conjunction with the scope above or the attached appendix.
Information and Contact: BSI, Kitemark Court, Davy Avenue, Knowlhill, Milton Keynes MK5 8PP. Tel: + 44 345 080 9000
BSI Assurance UK Limited, registered in England under number 7805321 at 389 Chiswick High Road, London W4 4AL, UK.
A Member of the BSI Group of Companies.

Certificate of Registration

ENVIRONMENTAL MANAGEMENT SYSTEM - ISO 14001:2015

This is to certify that:

Trojan Technologies Group ULC
3020 Gore Road
London
Ontario
N5V 4T7
Canada

Holds Certificate No: **EMS 633149**

and operates an Environmental Management System which complies with the requirements of ISO 14001:2015 for the following scope:

The environmental management system for the control of risks associated with the engineering and assembly of ultraviolet (UV) light technologies for wastewater, industrial, and drinking water disinfection applications, and for the destruction of pollutants in liquid streams.

For and on behalf of BSI:

Carlos Pitanga, Chief Operating Officer Assurance – Americas

Original Registration Date: 2016-03-08
Effective Date: 2022-03-06
Latest Revision Date: 2022-02-17
Expiry Date: 2025-03-07

...making excellence a habit.™

This certificate remains the property of BSI and shall be returned immediately upon request.
An electronic certificate can be authenticated online. Printed copies can be validated at www.bsigroup.com/ClientDirectory
To be read in conjunction with the scope above or the attached appendix.
Information and Contact: BSI, Kitemark Court, Davy Avenue, Knowlhill, Milton Keynes MK5 8PP. Tel: + 44 345 080 9000
BSI Assurance UK Limited, registered in England under number 7805321 at 389 Chiswick High Road, London W4 4AL, UK.
A Member of the BSI Group of Companies.

PROJECT DESCRIPTION & SYSTEM DESCRIPTION

SECTION CONTENTS

Project Description

System Description

TROJAN UV

Water Confidence™

Project Description

Project Name	El Centro, CA
Trojan Project Number	810206
Peak Flow	16 MGD
Average Flow	6 MGD
Minimum Flow	2 MGD
Peak Hydraulic Flow	8 MGD per Channel
Future Flow	24 MGD (12 MGD per Channel)
Total Suspended Solids	≤ 30 mg/L Based on a 30 Day Average
Percent Transmittance	62 % Minimum at 253.7nm
Disinfection Standards	≤ 200 Fecal Coliform / 100mL Based on a 30 Day Geometric Mean

System Description

Descriptions & Requirements

System Control Center (SCC)	Quantity: 1	Weight:	700lbs / 320kg

PLC Controller:	Allen Bradley CompactLogix 1769-L33ER
Operator Interface:	Allen Bradley PanelView Plus 7 Performance 10”
Lan Protocol:	Ethernet/IP
Panel Enclosure Material:	304SST
Enclosure Rating:	Type 4X
Panel Mounting:	Custom

Refer to SCC Drawings for Electrical and Component Details

Power Distribution Center (PDC)	Quantity: 2	Weight:	1000lbs / 454kgs

Power Distribution Center Material:	304SST
Enclosure Rating:	Type 4X

Refer to PDC Drawings for Electrical and Component Details

Hydraulic System Center (HSC)	Quantity: 2	Weight:	350lbs / 159kgs

Hydraulic Fluid:	Mobil DTE 10 Excel 15
Enclosure Material:	304SST
Enclosure Rating:	Type 4X
Enclosure Mounting:	Floor

Refer to HSC Drawings for Electrical and Component Details

TrojanUVSigna™ Bank	Quantity: 6	Weight:	370lbs / 168kgs

Number of UV Lamps per Bank:	8
ActiClean™ Cleaning System (ACS):	Included
UV Bank Material:	316 SST, Quartz, Teflon™
Rating:	Type 6P
Cable Management:	Spiral Wrap
Lamp Cables:	Integrated Plug & **65’ (20m) Cable included (One (1) per lamp)

***Refer to Project Layout Drawings for allowable routing distance.*

TrojanUVSigna™ Bank Frame	Quantity: 4	Weight:	150lbs / 68kgs

Number of UV Banks to Support:	Up to Two (2) UV Banks
Bank Frame Material:	316SST
Bank Frame Hardware:	Eighteen (18) Wedge Anchors Included per Frame, 3/8” dia. x 3.75” long

UV Intensity Sensor	Quantity: 6	Weight:	----

Number Required per UV Bank:	One (1)
Interconnection Cable:	Sensor to PDC

Bank in Place Proximity Sensor		Quantity: 6	Weight: ----
Number Required per UV Bank:	One (1)		
Interconnection Cable:	Sensor to PDC		
Electrode Level Sensor		Quantity: 2	Weight: ----
Water Level Detection:	Low		
Number per UV Channel:	One (1)		
Electrical Requirements:	12 VDC - 2 Conductor		
Level Sensor Control Box		Quantity: 2	Weight: 50lbs / 23kgs
Number per UV Channel:	One (1)		
Enclosure Material:	304SST		
Enclosure Rating:	Type 4X		
Enclosure Mounting:	Wall		

Refer to Level Sensor Control Box Drawings for Electrical and Component Details

Level Control Fixed Weir		Quantity: 2	Weight: ----
Level Controller Material:	316SST		

Refer to Project Layout Drawings & Water Level Control Device Manual

Hose Kits		Quantity: 6	Weight: ----
Hose Lengths:	** 20’ (6m)		
Hydraulic Fitting Material:	316SST		

***Refer to Project Layout Drawings for allowable routing distance.*

Operator Kit	Quantity: 1	Weight: ----

Start-Up Provisions are Provided in Addition to the Operator Kit Quantities

Warning Sign	Quantity: 2	Weight: ----

Spare Equipment	
Spare UV Lamp Assembly	Quantity: 8
Spare Quartz Sleeves Assembly	Quantity: 4
Spare Lamp Driver	Quantity: 4
Spare Wiper Seals	Quantity: 8
Spare UV Intensity Sensor	Quantity: 1
Signa BCB Board	Quantity: 8

PRODUCT INFORMATION

SECTION CONTENTS

Product Operations and Maintenance Manual

Water Level Control Device - Installation and Operation and Maintenance Manual (Weir)

Instruction, Level Sensor Control Box O&M / Installation

Instruction, TrojanUV Solo Lamp™ Cable Routing Inside PDC

Instruction, TrojanUV Hose Assembly Field Connection

TrojanUV - Instruction, Reference Sensor Procedure

Instruction, TrojanUV Solo Lamp™ Cable Installation Guideline

UV4000 Removal Instructions

TROJAN UV

A TROJAN TECHNOLOGIES BUSINESS

TROJANUVSIGNA™

Operation and Maintenance

User Manual

Original Instructions

Edition 8

© Trojan Technologies, 2021. All rights reserved. Printed in Canada.

DC340101-08-02

If you require technical assistance, please contact the Technical Assistance Center (TAC) using the information below:

North America:	1-866-388-0488
All other areas:	1-519-457-2318
E-mail:	tac@trojantechnologies.com

At the time of publishing, the information within this document is current. Due to continuous improvements, we may have future changes and recommendations which will be sent via product bulletins.

Table of Contents

Section 1 Specifications 7

Section 2 Safety Information 9
- 2.1 Use of Hazard Information 9
- 2.2 Precautionary Labels 9
- 2.3 Safety Precautions 11

Section 3 General Information 15
- 3.1 Acceptable Noise Levels 15
- 3.2 Patents and Permissions 15
- 3.3 Abbreviations and Acronyms 15
- 3.4 System Overview 16
  - 3.4.1 System Control Center (SCC) 16
  - 3.4.2 Hydraulic System Center (HSC) 16
  - 3.4.3 Power Distribution Center (PDC) 16
  - 3.4.4 UV Bank 16
  - 3.4.5 Low Water Electrode Level Sensor 17

Section 4 Lockout Tag Out 19
- 4.1 Lockout Tag Out Procedure 19
  - 4.1.1 Equipment Shutdown 19
  - 4.1.2 Deactivate Energy Sources 19
  - 4.1.3 Lockout Tag Out Energy Sources 20
  - 4.1.4 Lockout Tag Out PDC for Individual Bank Compartments 20
  - 4.1.5 Verify the Lockout 20
- 4.2 Remove the Lockout Tag Out 20

Section 5 Startup and Shutdown 21
- 5.1 Startup the UV System 21
- 5.2 Shutdown the UV System 21
  - 5.2.1 Shutdown Procedure for the SCC 21
  - 5.2.2 Shutdown Procedure for PDC 21
  - 5.2.3 Shutdown Procedure for the HSC 22
- 5.3 Long Term Storage (i.e. Winterization) Procedures 22
  - 5.3.1 UV System - UV Banks Lifted out of UV Channel Option 22
  - 5.3.2 UV System - UV Banks Lowered in UV Channel Option 22
  - 5.3.3 UVT Controller and Sensor 23
- 5.4 Startup after Extended Periods of Time 23

Section 6 Shipment and Storage 25
- 6.1 How the Equipment is Shipped 25
- 6.2 Storage Requirements 25
- 6.3 Overview of Equipment Connections 25
- 6.4 Startup and System Commission 25

Section 7 Installation 27
- 7.1 Tools and Materials 27
- 7.2 System Control Center 28
  - 7.2.1 Mounting the SCC 28
- 7.3 Power Distribution Center 29
  - 7.3.1 Mounting the PDC 29
- 7.4 Hydraulic System Center 32
  - 7.4.1 Mounting the HSC 32
  - 7.4.2 Electrical Installation 34
- 7.5 Bank Frame Assembly 35
- 7.6 UV Bank 38
  - 7.6.1 Install UV Bank(s) 38
  - 7.6.2 Install Bank Lift Cylinders 42

7.7 UV Bank in Place Sensor 43
7.8 Cable and Wire Routing 45
7.8.1 Lamp Cables 45
7.8.2 Field Wire(s) 45
7.8.3 Bond Wire(s) 45
7.9 Hydraulic Hose 46
7.9.1 Connect the Hydraulic Hoses to the Lift and Wipe Cylinders 46
7.10 Cable Management 48
7.10.1 Install Cable Management Assemblies on UV Bank 50
7.10.2 Install Lamp Cables and Hydraulic Hoses in Bracket Assemblies 52
7.11 Hydraulic Hose Connections 55
7.11.1 Hydraulic Hose Fittings and Connections 55
7.11.2 Bleed the Hydraulic Hoses 57
7.12 Lift Cylinder 63
7.12.1 Secure the Lift Cylinder 63
7.13 UV Bank Support Assembly 65
7.14 Cable Trough Cable Management - Spiral Wrap 68
7.15 Cable Trough Cable Management - Cable Track 74
7.16 Level Sensor 79
7.17 UVI Sensor(s), Lamp Sleeves and UV Lamps 80
7.17.1 Install Sensor Housing 80
7.18 Electrical Connections 81
7.18.1 SCC Electrical Connections 81
7.18.2 PDC Electrical Connections 82
7.19 Additional Equipment 83
7.19.1 Water Level Controller 83
7.19.2 UV Transmittance Controller and Sensor 83

Section 8 Operation 85
8.1 Hydraulic System Center 85
8.1.1 HSC Overview 85
8.1.2 Lift the UV Bank Up/Down 86
8.1.3 Wiper Control Modes 88
8.1.4 Manually Operate the Wiper 88
8.1.5 Reset HSC Latched Alarms 89
8.2 Power Distribution Center 89
8.2.1 Enable PDC Remote Control 89
8.2.2 Enable PDC Local ON 89
8.3 System Control Center 90
8.3.1 Navigate the Human Machine Interface 90
8.3.2 Home Screen 93
8.3.3 UV Channel Overview Screen 95
8.3.4 UV Bank Overview Screen 100
8.3.5 Wiper Overview Screen 105
8.3.6 Trending Screen Overview 107
8.3.7 Alarm Screen Overview 108
8.3.8 Settings 108
8.3.9 Information 115

Section 9 Maintenance 119
9.1 Tools and Materials 119
9.2 Maintenance Schedule 120
9.3 UV Lamp 122
9.3.1 Storage Requirements for Used UV Lamps 122
9.3.2 Remove and Install a UV Lamp 122

9.4 Lamp Sleeve 129
9.4.1 Remove and Install a Lamp Sleeve 129
9.4.2 Clean Lamp Sleeves Manually 131
9.5 UVI Sensor 131
9.5.1 Remove and Install the UVI Sensor 131
9.5.2 Remove and Install UVI Sensor Housing 133
9.5.3 Clean the UVI Sensor Housing Sleeve 135
9.5.4 Remove and Replace UVI Sensor Housing Sleeve 135
9.5.5 Remove and Install UVI Sensor Wiper 139
9.5.6 Remove and Replace UVI Sensor Wiper O-rings and Fittings 140
9.5.7 Remove and Replace UVI Sensor Floor Bushing 142
9.6 UV Bank 143
9.6.1 Clean the UV Bank 143
9.6.2 Replace Sleeve Bushing (Floor) 144
9.7 Lamp Sleeve Wiper 145
9.7.1 Wiper Plate Fill and Vent Ports 145
9.7.2 Fill Wiping System 145
9.7.3 Flush the Wiping System 145
9.7.4 Remove and Install a Wiper Canister 146
9.8 Hydraulic System Center (HSC) 150
9.8.1 Inspect the HSC 150
9.8.2 Depressurize Hydraulic System 151
9.8.3 Replace the Hydraulic Fluid Filter 152
9.8.4 Drain and Fill the Hydraulic Fluid Reservoir 154
9.8.5 Replace a Hydraulic Hose 156
9.9 Hydraulic Cylinders 156
9.9.1 Grease a Wipe Hydraulic Cylinder 156
9.9.2 Remove and Replace Wipe Hydraulic Cylinder 157
9.9.3 Remove and Replace Lift Hydraulic Cylinder 162
9.10 Power Distribution Center (PDC) 167
9.10.1 Replace a UV Lamp Driver 167
9.10.2 Clean the AC Filter 170

Section 10 Troubleshooting 171
10.1 Resolving Alarms 171
10.1.1 Latched Alarms 171
10.1.2 Non-Latched Alarms 171
10.2 SCC Alarms 172
10.2.1 Critical Alarms 172
10.2.2 Major Alarms 172
10.2.3 Minor Alarms 174
10.3 UV Bank 175
10.4 Channel 179
10.5 System 181
10.6 Hydraulic System Center 184
10.7 Power Distribution Center 186

Section 11 Replacement Parts 187
11.1 UV Lamp and Lamp Sleeve 187
11.1.1 Lamp Sleeve Ports Top 188
11.2 UV Bank 188
11.3 UVI Sensor and Sleeve 189
11.4 UVI Sensor Wiper 190
11.5 Wiper Canister Assembly 190
11.6 Hydraulic System Center 191
11.7 Hydraulic Cylinder 192

11.8 Power Distribution Center 193
11.9 System Control Center 193
11.10 Miscellaneous 193

Section 1 Specifications

Specifications are subject to change without notice.

<table>
<tr><td colspan="6">General</td></tr>
<tr><td>Water temperature range</td><td colspan="5">1°C to 40°C (33.8°F to 104°F)</td></tr>
<tr><td colspan="6">Channel Frame and UV Bank</td></tr>
<tr><td rowspan="11">Weight</td><td rowspan="2"># Lamps</td><td colspan="2">UV Bank
(Fully Assembled)</td><td colspan="2">Channel Frame</td></tr>
<tr><td>Kg</td><td>Lbs</td><td>Kg</td><td>Lbs</td></tr>
<tr><td>8</td><td>168</td><td>370</td><td>68</td><td>150</td></tr>
<tr><td>10</td><td>186</td><td>410</td><td>77</td><td>170</td></tr>
<tr><td>12</td><td>206</td><td>450</td><td>86</td><td>190</td></tr>
<tr><td>14</td><td>223</td><td>490</td><td>95</td><td>210</td></tr>
<tr><td>16</td><td>241</td><td>530</td><td>104</td><td>230</td></tr>
<tr><td>18</td><td>259</td><td>570</td><td>113</td><td>250</td></tr>
<tr><td>20</td><td>277</td><td>610</td><td>123</td><td>270</td></tr>
<tr><td>22</td><td>295</td><td>650</td><td>132</td><td>290</td></tr>
<tr><td>24</td><td>314</td><td>690</td><td>141</td><td>310</td></tr>
<tr><td>UV lamp type</td><td colspan="5">TROJANUV Solo Lamp™ (1000 W)</td></tr>
<tr><td colspan="6">Hydraulic System Center</td></tr>
<tr><td>Voltage</td><td colspan="5">Refer to Component Label or Electrical Drawings</td></tr>
<tr><td>Enclosure Rating</td><td colspan="5" rowspan="3">Refer to Component Label or System Description</td></tr>
<tr><td>Material</td></tr>
<tr><td>Weight</td></tr>
<tr><td>Hydraulic Fluid Type</td><td colspan="5">Refer to Label on HSC or System Description</td></tr>
<tr><td>Maximum hose length (includes rise and run) from HSC to UV Bank</td><td colspan="5">Refer to notes in project layout drawing</td></tr>
<tr><td colspan="6">Power Distribution Center</td></tr>
<tr><td>Voltage</td><td colspan="5">Refer to Component Label or Electrical Drawings</td></tr>
<tr><td>Enclosure Rating</td><td colspan="5" rowspan="2">Refer to Component Label or System Description</td></tr>
<tr><td>Material</td></tr>
<tr><td>Weight</td><td colspan="5">454 kgs (1000 lbs) - Single Cabinet
726 kgs (1600 lbs) - Double Cabinet
Refer to Component Label for actual weight</td></tr>
<tr><td>Cooling Type</td><td colspan="2">with Forced Air (no A/C)
Note: Must be suitable for electrical distribution and drive equipment</td><td colspan="3">with Air Conditioner (A/C)</td></tr>
<tr><td>Installation Location</td><td colspan="2">Indoor only</td><td colspan="3">Indoor / Outdoor (Outdoor with Sunshades)</td></tr>
<tr><td>Ambient Temperature Limit</td><td colspan="2">-20°C to 30°C (-4°F to 86°F)</td><td colspan="3">-20°C to 43°C (-4°F to 109°F)</td></tr>
<tr><td>Maximum Distance between PDC to UV Bank Edge</td><td colspan="5">Refer to notes in project layout drawing, 14AWG, four (4) conductor, tray cable</td></tr>
</table>

Specifications

System Control Center (SCC)	
Voltage	Refer to Component Label or Electrical Drawings
Enclosure Rating	Refer to Component Label or System Description
Material	
Weight	
UVI Sensor	
Output range	4 to 20 mA current loop (2 wire)
Supply voltage	24 VDC from the PDC
Water Level Sensor	
Supply voltage	Refer to Electrical Drawings
System Certification	
UL, CE available	

Section 2 Safety Information

Please read this entire manual before installing this equipment. Pay attention to all danger, warning and caution statements in this manual. Failure to do so could result in serious personal injury or damage to the equipment.

Make sure that the protection provided by this equipment is not impaired. Do not use or install this equipment in any manner other than that specified in installation manual.

2.1 Use of Hazard Information

⚠ DANGER
Indicates a potentially or imminently hazardous situation which, if not avoided, will result in death or serious injury.

⚠ WARNING
Indicates a potentially or imminently hazardous situation which, if not avoided, could result in death or serious injury.

⚠ CAUTION
Indicates a potentially hazardous situation which, if not avoided, could result in minor or moderate injury.

NOTICE
Indicates a situation that is not related to personal injury.

2.2 Precautionary Labels

Read all labels and tags attached to the instrument. Personal injury or damage to the instrument could occur if not observed.

	Electrical equipment marked with this symbol may not be disposed of in European public disposal systems. In conformity with European local and national regulations (EU Directive 2002/96/EC), European electrical equipment users must now return old or end-of life equipment to the Producer for disposal at no charge to the user. ***Note**: For recycling, please contact the equipment producer or supplier for instructions on how to return end-of-life equipment, producer-supplied electrical accessories, and all auxiliary items for proper disposal. No equipment is to be returned without authorization. Local recycling programs may be used. For the manufacturer recycling UV lamp program or producer-supplied electrical accessories and auxiliary items, contact the equipment supplier for proper disposal instructions.*
	This symbol indicates there is Mercury present.
	This is the safety alert symbol. Obey all safety messages that follow this symbol to avoid potential injury. When on the equipment, refer to the Operation and Maintenance manual for additional safety information.
	This symbol indicates a risk of electrical shock and/or electrocution exists.
	This symbol indicates the marked item has stored energy. Obey procedures to wait 5 (five) minutes after disconnecting main power, to allow stored energy to dissipate.
	This symbol indicates the marked item is a pressurized device. Obey all procedures to safely depressurize.
	This symbol indicates the marked item could inject fluid into the skin.

	This symbol indicates the components of the system have been exposed to biohazardous waste and / or aerosols.
	This symbol indicates a potential crushing pinch hazard.
	This symbol indicates a lifting clearance hazard.
	This symbol indicates a trained and competent lift operator should be used to move the equipment.
	This symbol indicates a body crush hazard. People should stay clear from under overhead loads.
	This symbol indicates there is a potential fall from height hazard.
	This symbol indicates surfaces may be slippery and there is a potential fall hazard.
	This symbol indicates there is a potential UV hazard. Proper protection must be worn.
	This symbol indicates the marked item could be hot and should not be touched without gloves.
	This symbol indicates the presence of devices sensitive to Electro-static Discharge (ESD). Proper care must be taken to prevent damage to the equipment.
	This symbol indicates the marked item should not be touched.
	This symbol indicates a risk of electrical shock and/or electrocution exists, and that all appropriate lockout tag out procedures must be obeyed.
	This symbol indicates to secure the device with a safety device / hook.
	This symbol indicates a safety glasses with side protection is required for protection against UV exposure.

	This symbol indicates a UV rated full face shield is required. Faces shields are to be worn with safety glasses or safety goggles.
	This symbol indicates gloves must be worn.
	This symbol indicates safety boots must be worn.
	This symbol indicates hearing protection is required.
	This symbol indicates a hard hat must be worn.
	This symbol indicates safety harness or fall protection equipment must be worn.
	This symbol indicates the operator must read all available documentation to perform the required procedures.
	This symbol indicates that you must contact your local your Service Provider for assistance.

2.3 Safety Precautions

Read the safety precautions in this section before installing. Obey the instructions in the safety precautions. Failure to follow the instructions in the safety precautions can result in serious injury or death.

⚠ DANGER

Arc Flash and Shock Hazard - Live Electrical Circuit Present.

- Failure to follow these instructions will result in electrical shock, injury or death from electrocution.
- Equipment should be accessed by competent personnel only.
- Devices inside this equipment contain stored energy.
- NEVER work inside this equipment until at least 5 (five) minutes after disconnecting main power to allow stored energy to dissipate.
- Lockout tag out all sources of power before performing any inspection, repair, or maintenance. ***There may be more than one source of power!***

⚠ DANGER

Shock Hazard.

- Failure to use manufacturer approved parts, including UV Lamps, may result in significant thermal damage to insulation systems which may result in the exposure of live parts.

⚠ DANGER

Depressurize Device. Fluid Injection Hazard.

- Failure to depressurize hydraulic circuit before servicing will result in serious injury or death due to high pressure hydraulic fluid.
- NEVER physically inspect, repair or do maintenance unless hydraulic circuit has been depressurized by competent personnel.
- Protect hands, face and body before disconnecting hydraulic or other lines.
- If accidental skin injection occurs, seek immediate medical attention.

⚠ DANGER

Fall Hazard.

- Failure to follow these instructions will result in injuries due to fall.
- Always use appropriate fall resistant procedures and equipment while working near an uncovered channel, when a fall hazard is present, in compliance with local regulations.

⚠ WARNING

Personal Injury Hazard.

- Use of parts not approved by the manufacturer may cause personal injury, damage to the UV system or malfunction of the UV System and may void the manufacturer's warranty.
- Use of UV Lamps and Lamp Drivers, not approved by the manufacturer, will void UL and CE product safety certifications.
- The parts listed in Section 11 are approved by the manufacturer.

⚠ WARNING

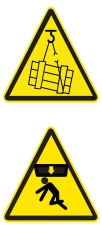

Body Crush Hazard.

- Failure to follow these instructions could result in serious injury or death due to improper lifting procedures, underrated lifting equipment and, moving parts.
- ALWAYS secure with safety device.
- ALWAYS stay clear of elevated loads.
- ALWAYS comply with local safety regulations.

⚠ WARNING

Pinch Hazard.

- Failure to follow these instructions could result in serious injury or death due to moving parts.
- ALWAYS keep hands clear of this area.

⚠ CAUTION

Burn Hazard.

- Failure to follow these instructions may result in minor or moderate injury due to burns.
- NEVER touch hot surface.
- Allow UV lamps to cool for a minimum of 10 (ten) minutes before handling.
- If accidental exposure occurs, immediately cool affected area. Consult physician.

⚠ CAUTION

Slip and Fall Hazard.

- Failure to follow these instructions may result in injuries from slip and fall.
- ALWAYS ensure safe footing.
- ALWAYS clean up spills promptly.
- ALWAYS comply with site-specific safety protocols and procedures.

⚠ CAUTION

UV Light Hazard.

- Failure to follow these instructions may result in serious burns to unprotected eyes and skin.
- ALWAYS use UV protective gear, including gloves, clothing, and face shield when UV light is present.
- NEVER look directly at illuminated UV lamp, even with protective gear.
- NEVER illuminate UV lamp if personnel may be directly exposed to UV light.

NOTICE

Mercury Chemical

- UV lamps contain a small amount of mercury in either elemental or bound amalgam state, depending on lamp type. These lamps are similar to fluorescent and compact fluorescent lamps (CFL). Always comply with local regulations governing the disposal of lamps containing mercury and the waste associated with breakage.
- NEVER use a vacuum cleaner to clean up broken lamps containing mercury. Vacuuming could spread mercury-containing powder or vapor.
- Thoroughly collect broken glass and trace amounts of mercury and place into a sealable bag or container. For further reference see the U.S. EPA guidelines http://www.epa.gov/cfl/cleaning-broken-cfl.
- If you have further questions about the safe clean-up of mercury containing lamps, contact the TrojanUV Technical Assistance Center at tac@trojantechnologies.com.

NOTICE

Personal Protective Equipment Required.

- ALWAYS use appropriate eye, hand, and foot protection.
- ALWAYS wear UV-C safety glasses when around equipment or a UV-C faceshield with safety glasses or safety goggles when inspecting open running equipment.
- ALWAYS follow plant safety procedures and protocols.
- ALWAYS take necessary precautions when working around, operating, or working on this equipment, if contamination of components is expected within this application due to effluent biological or chemical contaminants.

NOTICE

Only competent personnel should undertake operation, repairs, maintenance, or servicing of equipment described in this manual. Maintain the continuity of the lockout tag out between shifts. If you do not understand the information or procedure explanations in this manual, STOP.

NOTICE

The **TrojanUVSigna®** has been validated through microbial testing. Through this testing, performance data has been generated for UV dose delivery to inactivate Escherichia coli (E. coli) and fecal coliform.

WARNING: This product can expose you to chemicals including phthalates, which is known to the State of California to cause cancer, and mercury, which is known to the State of California to cause birth defects or other reproductive harm. For more information go to www.P65Warnings.ca.gov.

Notes: *1) Dispose of contaminated parts/components as per country requirements.*

2) Refer to the Safety Data Sheets for accidental exposure to materials.

Section 3 General Information

The information in this manual has been carefully checked and is believed to be accurate. However, the manufacturer assumes no responsibility for any inaccuracies that may be contained in this manual. In no event will the manufacturer be liable for direct, indirect, special, incidental or consequential damages resulting from any defect or omission in this manual, even if advised of the possibility of such damages. In the interest of continued product development, the manufacturer reserves the right to make improvements in this manual and the products it describes at any time, without notice or obligation.

3.1 Acceptable Noise Levels

The airborne noise emissions, A-weighted emission sound pressure level, is below 80dB(A). When working within 10 feet of the air conditioner hearing protection must be worn.

3.2 Patents and Permissions

The products described in this document may be protected by one or more patents in The United States of America, Canada and/or other countries. For a list of patents owned by Trojan Technologies, go to: www.trojantechnologies.com/patents.

No part of this publication may be reproduced, stored in a retrieval system, or transmitted in any form or by any means without written permission of Trojan Technologies.

3.3 Abbreviations and Acronyms

Table 1 describes the abbreviations and acronyms included in this manual.

Table 1 Abbreviations and Acronyms

Abbreviation/Acronym	Description
BCB	Bank Control Board
ESD	Electro-Static Discharge
HMI	Human Machine Interface
HSC	Hydraulic System Center
kgs	Kilograms
lbs	Pounds
PDC	Power Distribution Center
SBC	Sensor Base Control
SCADA	System Control and Data Acquisition
SCC	System Control Center
UPS	Uninterruptible Power Supply
UV	Ultraviolet
UVI	UV Intensity
UVT	UV Transmittance

3.4 System Overview

The system is an open-channel, UV system that uses high-output amalgam UV lamps in an inclined, staggered array for use with Municipal waste water.

The system includes:

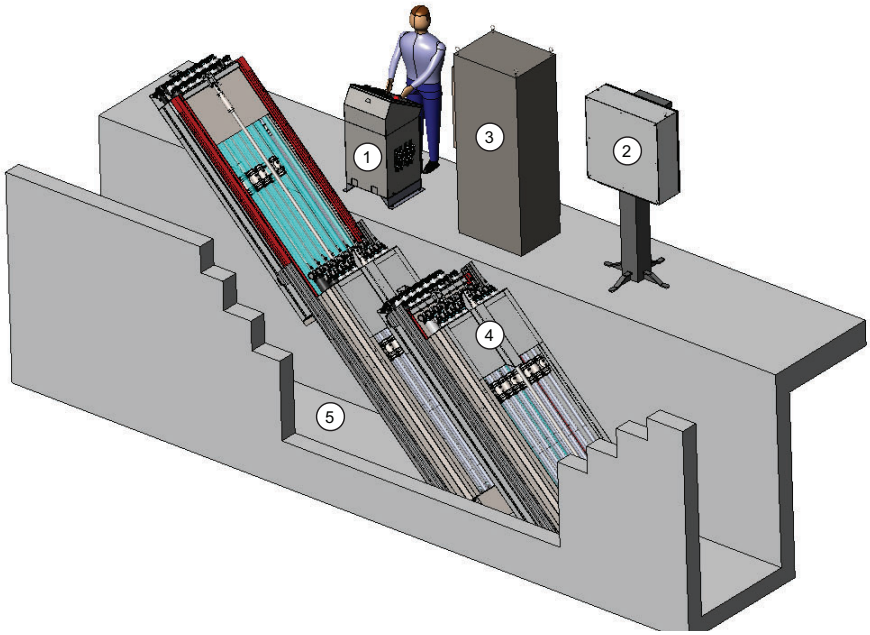

Figure 1 System Overview

1	Hydraulic System Center	**2**	System Control Center
3	Power Distribution Center	**4**	UV Bank
5	UV Channel (by others)	**6**	Level Controller (options) (not shown)
7	Low Water Level Sensor (not shown)	**8**	High Water Level Sensor (optional) (not shown)

3.4.1 System Control Center (SCC)

The SCC monitors and controls all UV functions, including dose pacing. Dose pacing is an automatic, effluent parameter based program that maintains a constant performance while conserving power and extending UV lamp life.

3.4.2 Hydraulic System Center (HSC)

The HSC actuates the ActiClean Cleaning System (ACS). The HSC contains the pump, valves and additional equipment required to operate the cleaning system and lift/lower the UV Bank.

ActiClean Sleeve Cleaning System

Dual-action cleaning system uses mechanical wiping in conjunction with a cleaning solution contained within wiper canisters surrounding the quartz sleeves. This system operates automatically, without operator involvement. Quartz sleeves and intensity sensors are cleaned regularly without disrupting operation.

3.4.3 Power Distribution Center (PDC)

The PDC contains lamp drivers that power and control the UV lamps.

3.4.4 UV Bank

A UV bank consists of UV Lamps, positioned in a staggered, inclined array.

3.4.5 Low Water Electrode Level Sensor

One low water electrode level sensor is located in each channel between the furthest downstream UV bank and the level controller. If a preset low water level condition exists, the UV lamps will de-energize and remain off until the proper water level is present.

DANGER

Obey all warning and caution statements. Refer to Section 2.

Read and understand this Operation and Maintenance Manual before operating this equipment. Read all user documentation before performing operations, inspections, repair, or maintenance on this equipment.

Only competent personnel should undertake operation, repairs, maintenance, or servicing of equipment described in this section of the manual. If you do not understand the information or procedure explanations in this manual, STOP and contact your Service Provider for assistance.

The procedure in Section 4.1 is the minimum lockout requirement. Use additional precautions, as needed. Obey all site-specific protocols.

4.1 Lockout Tag Out Procedure

4.1.1 Equipment Shutdown

Contact the plant manager or shift supervisor for help regarding equipment location and identification.

1. Ensure that no hazards will be created by equipment shutdown.
2. Shut down all equipment that will need Lockout Tag Out.
3. Ensure that all moving parts come to a complete stop.

4.1.2 Deactivate Energy Sources

A hazardous energy source is any energy source that can cause serious personal injury or death. The potential hazardous energy sources in this system are:

1. Identify and deactivate the main isolating device of each energy source:
   - Electrical energy (Incoming power)
   -

Hydraulic (Hydraulic Pressure)
   - Thermal (Thermal energy)
   -

UV Light (Radiation Energy)
   - Mechanical (Kinetic Energy)
2. Disconnect all electrical equipment from power:
   - Disconnect all electrical equipment
   - Power off and disconnect electrical power to hard-wired equipment
3. Dissipate stored electrical energy in lamp drivers.
4. Close all shut-off valves.

4.1.3 Lockout Tag Out Energy Sources

1. Use a multi-lock scissor adapter to lockout each energy source.
2. Attach a completed lockout tag. Include the required information:
   - Person and company applying the lockout
   - Reason for the lockout
   - Date of the lockout
3. Apply a personal lock.

4.1.4 Lockout Tag Out PDC for Individual Bank Compartments

1. Select the appropriate PDC compartment for the UV Bank to be shutdown (i.e Bank 1A and PDC compartment Bank 1A).
2. Follow standard lockout tag out procedures.

4.1.5 Verify the Lockout

1. Ensure that the meter is working correctly with a test before and after measuring the de-energized source:
   a. Test the voltmeter to a known, energized 24 VAC/120 VAC source.
   b. Use the same voltmeter to test the locked-out energy sources to verify that there is no voltage.
   c. Test the voltmeter again to a known, energized 24 VAC/120 VAC source.
2. Ensure that the stored energy sources have dissipated.
3. Try to start the de-energized equipment.

4.2 Remove the Lockout Tag Out

When the work is finished and the system has been restored to full operational condition, the lockout tag out can be removed.

1. Ensure that no hazards will be created by removal of the lockout.
2. Obey manufacturer's instructions and safe work procedures to energize and start the equipment.

Section 5 Startup and Shutdown

⚠ DANGER

Obey all warning and caution statements. Refer to Section 2.

Read and understand this Operation and Maintenance Manual before operating this equipment. Read all user documentation before performing operations, inspections, repair, or maintenance on this equipment.

Only competent personnel should undertake operation, repairs, maintenance, or servicing of equipment described in this section of the manual. If you do not understand the information or procedure explanations in this manual, STOP and contact your Service Provider for assistance.

5.1 Startup the UV System

1. Ensure that all circuit breakers in the UV system are ON.
2. Ensure that the PDC and HSC doors are properly closed.
3. Turn the selector switches on all PDCs to ◯ or (OFF) position (Section 8.2).
4. Ensure that the UV Banks are in the Home position. If not, turn on power at HSC and lower the UV Bank to Home position (Section 8.1.2).
5. Ensure that all solid grating sections are in place.
6. Ensure that the HSC is in ↗ or (REM) wipe mode for all UV Banks and the Mode Selector Switch is at ↗ or (REM) position (Section 8.1).
7. Ensure at SCC, system mode is set to ◯ or (OFF) (Section 8.2).
8. Switch on all power to the PDC and SCC.
9. Turn disconnect on HSC and PDC to | or (ON) (Section 8.1.1 and Section 8.2.1).
10. Turn the selector switches on all PDCs to the ↗ or (REM) position (Section 8.2).
11. Go back to SCC and set system mode to Auto (Section 8.2).

5.2 Shutdown the UV System

5.2.1 Shutdown Procedure for the SCC

1. Home Screen ⟶ Channel Overview Screen ⟶ Select individual UV Bank button ⟶ Change UV Bank model to REMOTE OFF.
2. Repeat step 1 for all remaining UV Banks.

5.2.2 Shutdown Procedure for PDC

1. PDC mode selector switch ⟶ ◯ or (OFF).
2. PDC disconnect ⟶ ◯ or (OFF) (Section 8.2).
3. Lockout Tag Out the upstream main high voltage supply to the PDC (Section 4).

5.2.3 Shutdown Procedure for the HSC

1. Turn all UV Bank wiper mode switches ⟶ ◯ or (OFF).
2. HSC disconnect ⟶ OFF (Section 8.1).
3. Lockout Tag Out the upstream main high voltage supply to the HSC (Section 4).

5.3 Long Term Storage (i.e. Winterization) Procedures

In some instances, waste water treatment plants are only required to have seasonal operation. If this is the case for your plant, please follow the procedures listed to winterize the UV Equipment.

NOTICE

Ensure power is retained to all panels [i.e. SCC, PDC(s), HSC(s)] by leaving disconnects on for all equipment. Failure to leave panels energized can lead to condensation or corrosion of electronic components. Damage caused by condensation or corrosion of electronic components due to inadequate winterization procedure is not covered by Trojan's warranty.

5.3.1 UV System - UV Banks Lifted out of UV Channel Option

The following procedures outline winterization procedures for a plant that continues flow through the UV Equipment while not in operation.

1. Shutdown the UV System by doing one of the following steps:
   a. Follow the Shutdown Procedure from the SCC. Refer to Section 8.2.1.

      OR

   b. Turn all PDC mode selector switches to the ◯ or (OFF) position.

      Note: *DO NOT turn the PDC disconnect switches to the ◯ or (OFF) position.*
2. Lift UV Banks Up (Section 8.1.2).
3. Remove any debris from the UV Bank.
4. Flush the wiping system (Section 9.7.3).
5. Grease the wiping cylinders (Section 9.9.1).
6. If lamps and lamp sleeves are being left in the UV Bank, ensure all lamp plugs are installed.
7. If lamps are being removed for storage, re-install all lamp plugs into the sleeve sockets.
8. If lamps and sleeves are being removed, cover the lamp plugs with a protective (i.e. waterproof) bag and secure to prevent moisture penetration.
9. Cover UV Bank with tarp to avoid snow or ice buildup in the UV Bank.
10. Make sure that the enclosure doors for the SCC, HSC(s) and PDC(s) are securely closed.

    Note: *HSC's may be optionally covered with a tarp to prevent snow or ice buildup.*

5.3.2 UV System - UV Banks Lowered in UV Channel Option

The following procedures outline winterization procedures for a plant that either diverts flow around the UV Channel OR continues flow through the UV Equipment while not in operation.

1. Shutdown the UV System by doing one of the following steps:
   a. Follow the Shutdown Procedure from the SCC. Refer to Section 8.2.1.

      OR

   b. Turn all PDC mode selector switches to the ◯ or (OFF) position.

      Note: *DO NOT turn the PDC disconnect switches to the ◯ or (OFF) position.*

2. Lift UV Banks Up (Section 8.1.2).
3. Remove any debris from the UV Bank.
4. Flush the wiping system (Section 9.7.3).
5. Grease the wiping cylinders (Section 9.9.1).
6. If there will be effluent present in the UV Channel over the winterization period:
   a. Remove the Lamp Sleeves (Section 9.4.1) and the UVI Sensor Housing (Section 9.5.2). Store UV Lamps, Lamp Sleeves, UVI Sensor(s) and the UVI Sensor Housing in a location in accordance to Section 6.
   b. Cover the lamp plugs with a protective (i.e. waterproof) bag and secure to prevent moisture penetration.
7. If effluent will not be present in the UV Channel over the winterization period, follow steps 6 and 7 in Section 5.3.1.
8. Lift UV Banks Down (Section 8.1.2).
9. Make sure that the enclosure doors for the SCC, HSC(s) and PDC(s) are securely closed.

   Note: *HSC's may be optionally covered with a tarp to prevent snow or ice buildup.*

5.3.3 UVT Controller and Sensor

NOTICE
Use either diluted acid or bleach to clean the UVT sensor. Do not use both.

1. Shut down all power to UVT controller.
2. Disconnect the UVT sensor from the controller.
3. Clean the UVT sensor, especially the optical path. Dry the UVT sensor.
4. Disconnect the controller. Store both the controller and sensor in a dry, clean location where the temperature is above freezing.

5.4 Startup after Extended Periods of Time

1. Inspect for damaged, worn or cracked wiping system hoses and seals.
2. Flush the wiping system (Section 9.7.3).
3. Fill the wiping system (Section 9.7.2).
4. Grease the wiping cylinders (Section 9.9.1).
5. Clean any debris from the UV Bank.
6. Install UV Lamps into UV Bank, if previously removed (Section 9.3.2).
7. Install UVI Sensor Housing (Section 9.5.2) and UVI Sensor (Section 9.5.1) if previously removed.
8. Lift UV Banks down (Section 8.1.2).
9. Start Up the UV System (Section 5.1).

Section 6 Shipment and Storage

The following instructions outline the duties and responsibilities of the contractor on receiving the system. The contractor assumes responsibility for the system after it has arrived at the project site.

These instructions define the minimum requirements for care of the equipment prior to commissioning by the Trojan Service Department. Additional care must be demonstrated by the contractor, as necessary, to ensure that the equipment is not damaged.

6.1 How the Equipment is Shipped

The system is delivered to the site by truck. System components are packed in wooden crates labeled with the component name(s), part number(s) and project number. Other labels identify components which are fragile or breakable and components which must be kept dry.

On receiving the Trojan bank frame and UV banks, unpack and inspect for physical damage. Contact your nearest Trojan Technologies representative in case of missing parts or damage.

Note: *The system is usually shipped as separate pieces - Bank frame, UV banks and Electrical Panels.*

6.2 Storage Requirements

The manufacturer recommends indoor storage of the equipment. The equipment should be stored in a dry warehouse. Heating is not necessary during storage. However, before system startup, the equipment must be warmed to greater than 15ºC (60ºF) for a period of 24 hours.

Storage area conditions:

- Ambient air temperature between -25ºC to 55ºC (-13ºF to 130ºF)
- Ambient Relative humidity from 5% to 100%, condensing environment
- Free from dust and dirt ingress
- Must not contain corrosive or explosive gases
- Free from salt air
- Vermin free

Note: ActiClean Gel must be stored in a non-freezing environment.

If indoor storage is not possible, the UV Bank(s), HSCs and PDCs may be stored outdoors, with additional conditions:

- Equipment is stored on high ground that is not susceptible to flooding.
- Equipment is elevated to a minimum height of 300 mm above the ground or as appropriate to prevent flooding.
- Equipment is completely covered with waterproof tarps to prevent exposure to the elements (e.g., rain, snow, sand, dust, etc.). Tarps must be tight fitting, attached securely and examined regularly. Water and snow accumulation should be removed regularly.
- Storage crates should not be exposed to direct sunlight.
- Equipment can be stored in sea containers.

6.3 Overview of Equipment Connections

Refer to the electrical and layout drawings provided by Trojan Technologies. If the supplied layout drawings does not match the site conditions, contact Trojan Technologies for assistance.

6.4 Startup and System Commission

After the UV system has been shipped, the contractor will be issued documentation for a startup request. These documents must be completed and returned to the issuer before a commission date can be scheduled.

Section 7 Installation

DANGER

Obey all warning and caution statements. Refer to Section 2.

Read and understand this Operation and Maintenance Manual before operating this equipment. Read all user documentation before performing operations, inspections, repair, or maintenance on this equipment.

Only competent personnel should undertake operation, repairs, maintenance, or servicing of equipment described in this section of the manual. If you do not understand the information or procedure explanations in this manual, STOP and contact your Service Provider for assistance.

An appropriate sized crane will be required for off-loading and installation of systems. The size of the crane is dependent on each project configuration. Refer to Section 1 and to project documentation for assembled weights of the components. Use additional precautions, as needed. Obey all site-specific protocols.

7.1 Tools and Materials

Symbols	Description	Symbols	Description
	Wrench - Open		Crimping Tool
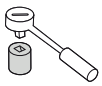	Socket Wrench and Socket		Power Drill with Bits
	Adjustable Wrench		Heat Gun
	Funnel		Hydraulic Fluid
	Hex Key		Level
	Lint-free Cloth (Kimwipes®)		Lifting Straps (properly rated for equipment load)
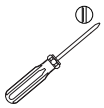	Slotted Screwdriver		Trowel
	Tape Measure		Pliers - Needlenose
	Wrench - Torque		Grout (by others)
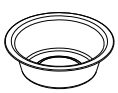	Shallow Bowl	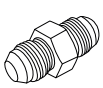	JIC Straight Union

Symbols	Description	Symbols	Description
	Wrench - Combination	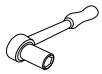	Wrench - Socket
	Anti-Seize		Spreader Bar (properly sized and rated for equipment load)
	Bucket		Tray to catch oil

7.2 System Control Center

7.2.1 Mounting the SCC

Prerequisites:

- Clear area where SCC will be installed. Refer to the project layout drawings.

  Note: *For outdoor installations, the HMI must be positioned away from the sun.*

Tools:

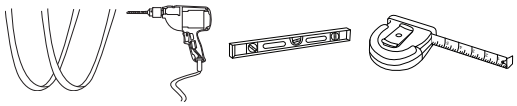

Materials:

- Anchor bolts (by others)
- Electrical Drawings, Electrical Interconnect Drawings, provided

Procedure:

1. Connect lifting straps to the lifting lugs on the SCC. Lift the SCC enclosure into the final installed position.
2. Mark the anchor points on the wall. Lift and set aside SCC enclosure.

   Note: *It is recommended to position the HMI height at a height that an operator can easily read the screen.*
3. Drill anchor bolt holes and install 6 mm (1/4 inch) anchors.

4. Lift and install the SCC enclosure onto the anchors. Secure with mounting hardware as per local codes. Remove lifting straps.

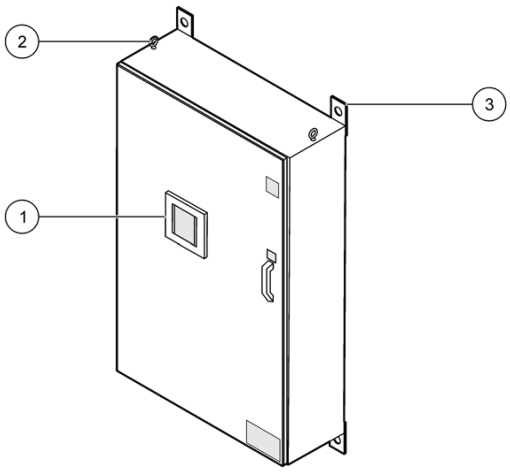

Figure 2 SCC

1	SCC HMI	**3**	Panel mounting lugs
2	Panel lifting lugs		

Note: *For floor mounted SCC's, follow the same steps as outlined for installing a single PDC (Section 7.3.1).*

7.3 Power Distribution Center

7.3.1 Mounting the PDC

Prerequisites:

- Refer to layout drawings for PDC location.
- Clear area where PDC will be installed.
- Refer to Electrical Wiring Diagram, Interconnect Drawing and Layout Drawings provided for additional information.

Tools:

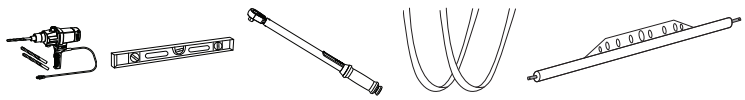

Materials:

- Anchor bolts (by others)
- Shims (if required, by others)

Procedure:

Single PDC:

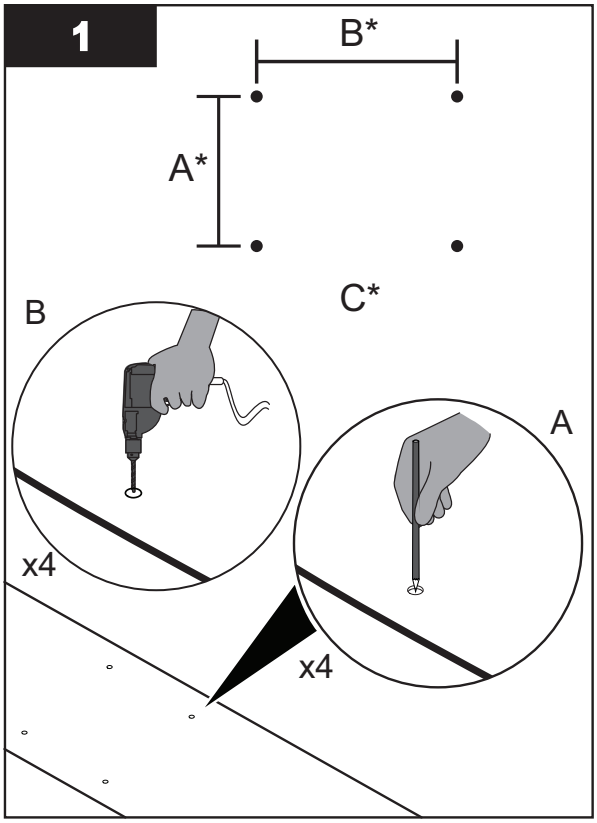

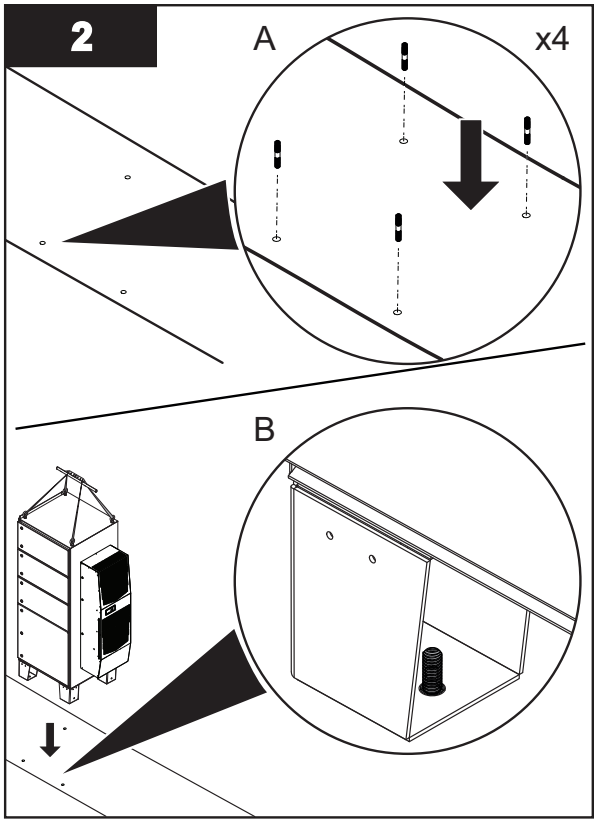

Dimension A* = 573mm (22.59”)
Dimension B* = 560mm (22.05”)
Reference C* = Front of PDC
Mounting Hole Diameter = 22mm (0.87”)

Notes: *1) Install anchor bolts as per civil engineering drawings and/or contract specifications.*
2) Level the PDC in both directions (Top to bottom and front to back). Use shims as required.
3) Fill gap (if any) between the feet and the floor with shims.

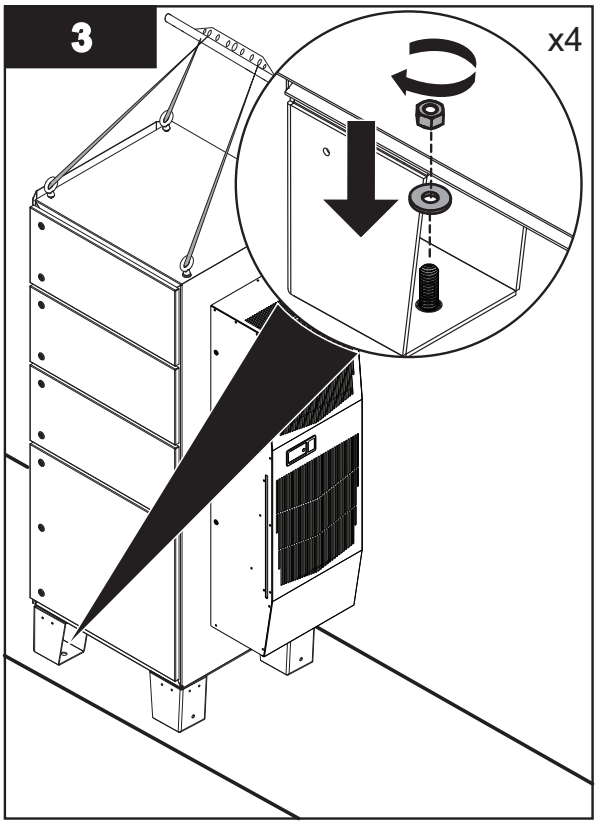

Double PDC:

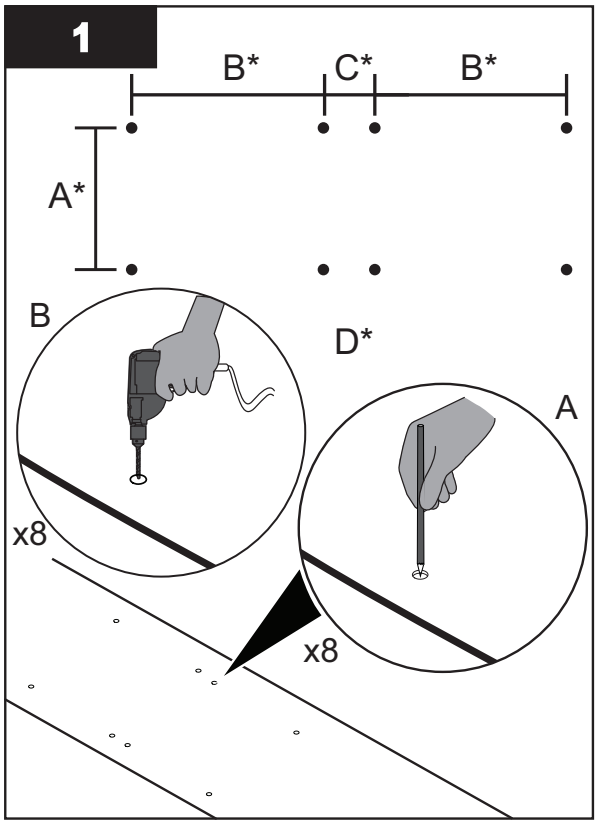

Dimension A* = 573mm (22.59”)
Dimension B* = 560mm (22.05”)
Dimension C* = 203mm (7.98”)
Reference D* = Front of PDC
Mounting Hole Diameter = 22mm (0.87”)

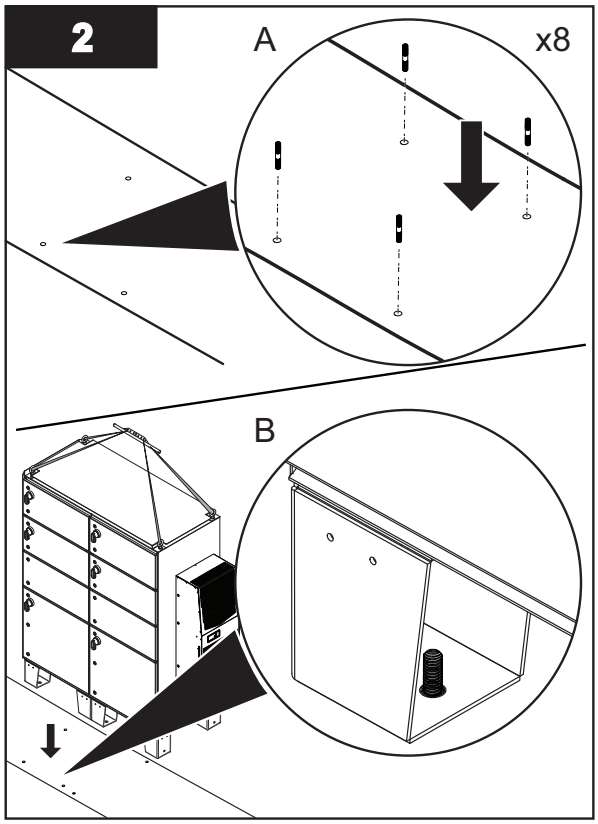

Notes: *1) Install anchor bolts as per civil engineering drawings and/or contract specifications.*
2) Level the PDC in both directions (Top to bottom and front to back). Use shims as required.
3) Fill gap (if any) between the feet and the floor with shims.

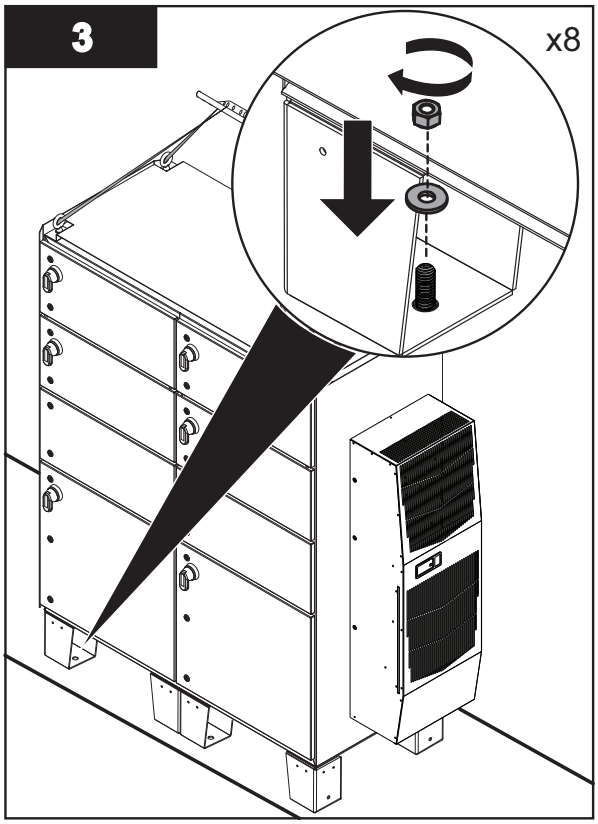

7.4 Hydraulic System Center

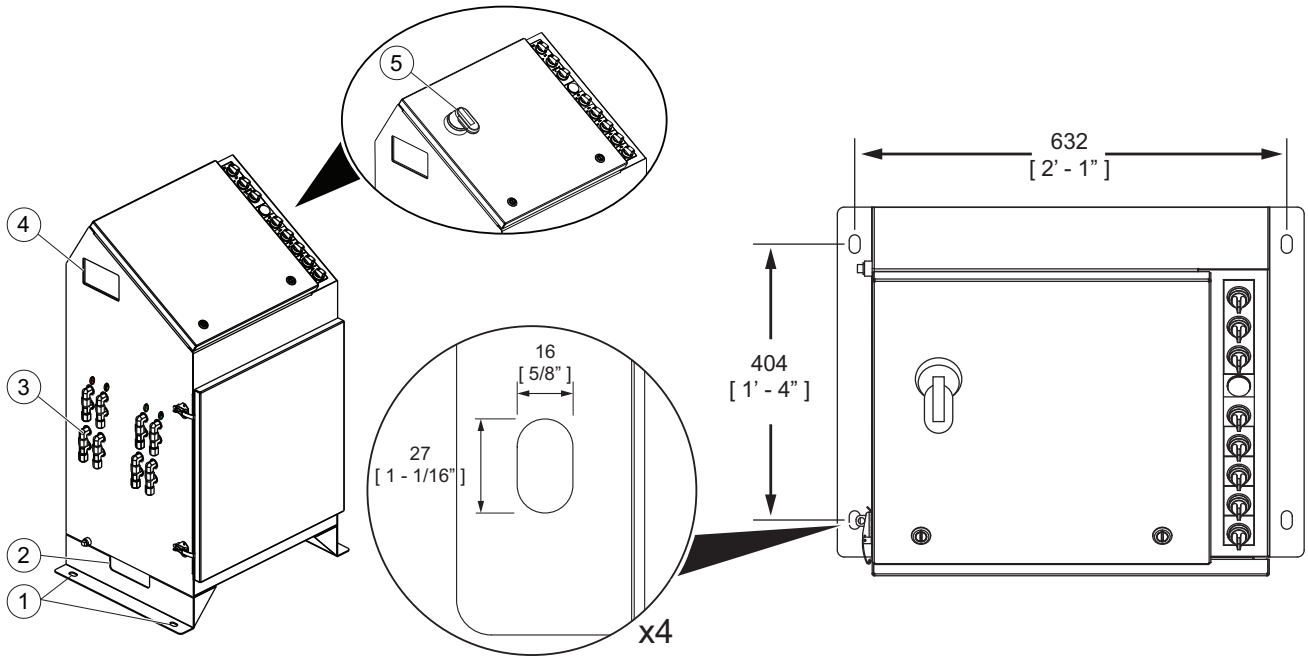

Figure 3 HSC Assembly Mounting and Connections

1	Mounting Holes (4x)	**4**	Gland Plate Low Voltage (Left Side) High Voltage (Right Side)
2	Lifting sling access	**5**	Disconnect Handle (optional)
3	Hydraulic Ports		

7.4.1 Mounting the HSC

Prerequisites:

- Refer to project layout drawing for HSC placement.
- Clear area where HSC will be installed.

Notes: *1) Keep bends and elevation changes in the hydraulic hoses to a minimum.*

2) The maximum hose distance for the HSC is 15.2 m (50 feet).

Tools:

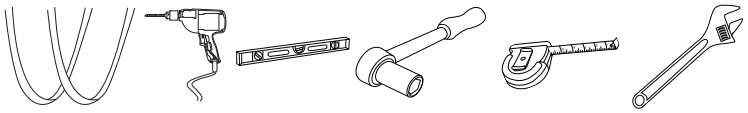

Materials:

- Anchor hardware (by others)

Procedure:

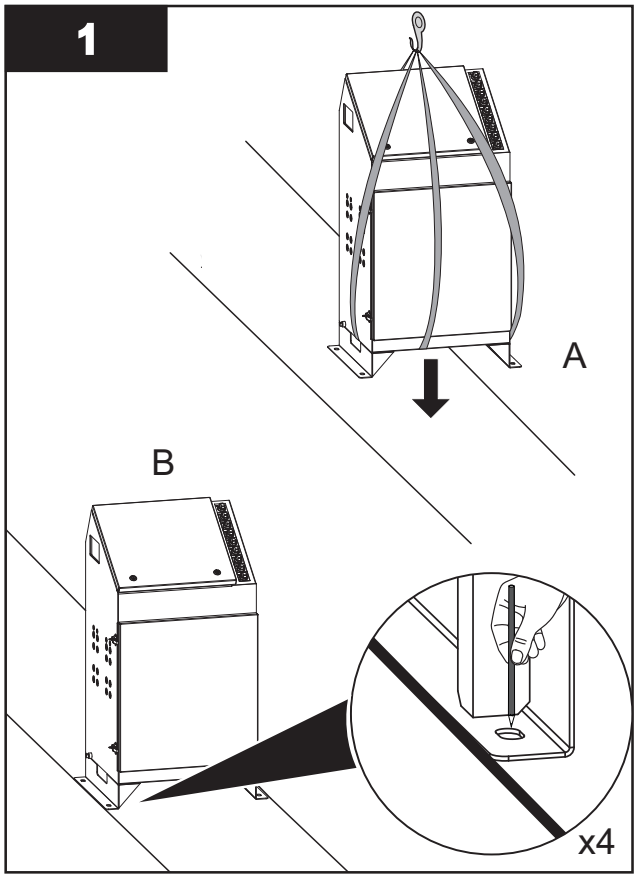

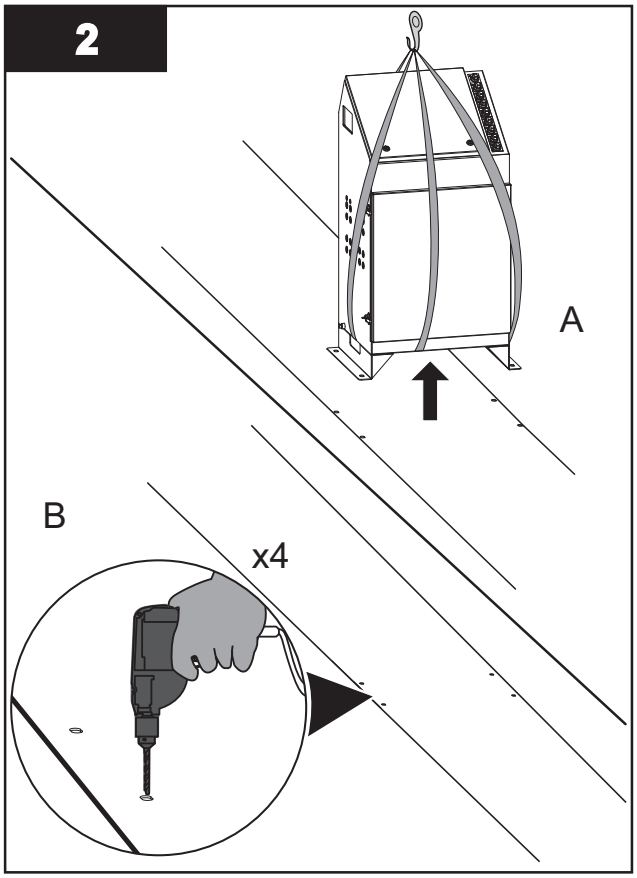

Note: *Install lifting straps as required to safely lift and lower the HSC.*

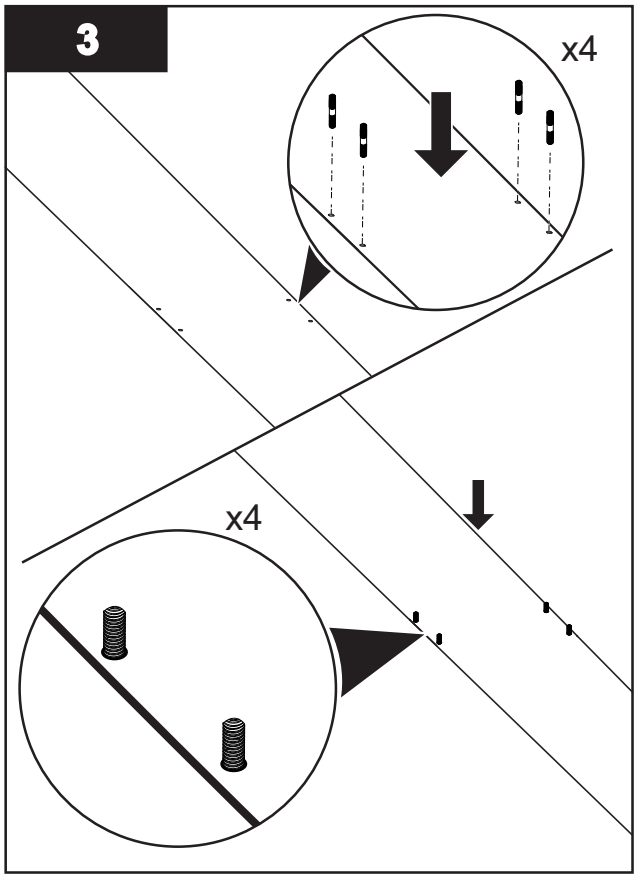

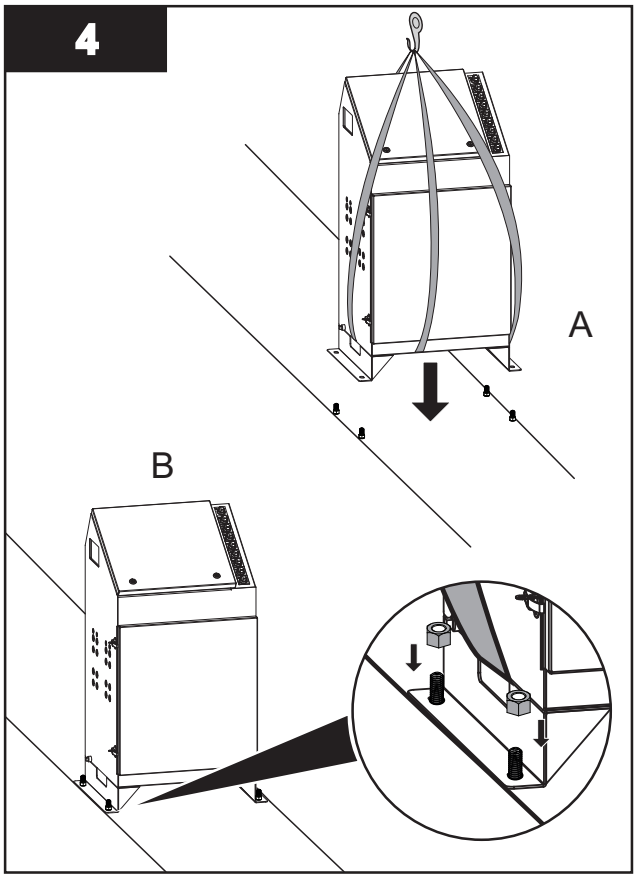

Note: *Level the HSC in both directions (Top to bottom and front to back.*

7.4.2 Electrical Installation

Prerequisites:

- Use appropriately rated cable as per the Electrical and Layout Drawings provided by Trojan Technologies.
- Apply Lockout Tag Out devices as required. Refer to Section 4.
- Refer to Electrical Wiring Diagram, Interconnect Drawing and Layout Drawings provided for additional information.

Tools:

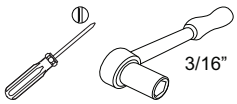

- Hydraulic Knock out

Materials:

- Electrical Drawings, Electrical Interconnect Drawings, provided

Procedure:

1. Locate label on Gland Plate:
   - Green (Left side is for low voltage connections)
   - Red (Right side of gland plate is for high voltage connections)
2. Remove gland plate to be drilled on site, noting the orientation of the plastic washers (Figure 4).
3. Use the hydraulic knockout device to add holes to the HSC aluminum gland plate for incoming power feed and all applicable field wiring. Ensure the orientation of conduit holes for power and control wiring match the label.
4. Install the power feed and all applicable field wiring. Include a local disconnect. Obey all local codes for main incoming power supplies.

   Note: *All openings created on the cabinets MUST be filled with equipment marked with the same type rating, as the enclosure (Ex: Cable Strain Reliefs).*
5. Reinstall gland plate, torque nuts noting orientation of plastic washers (Figure 4).

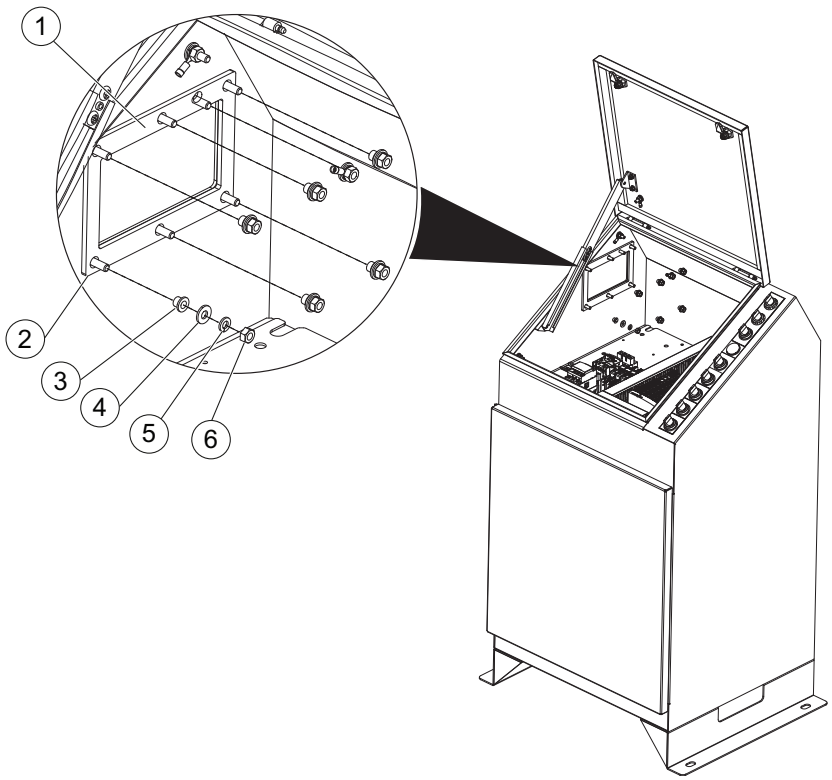

Figure 4 HSC - Gland Plate Assembly

1	Gasket	**4**	Flat Washer
2	Gland Plate	**5**	Splitlock Washer
3	Plastic Washer	**6**	Hex Nut

7.5 Bank Frame Assembly

NOTICE

DO NOT remove the frame support located in the middle of the frame assembly. Remove only after the bank frame grouting is complete.

Prerequisites:

- Refer to Project Layout Drawings provided by the manufacturer for install location.
- The Bank Support Assembly is strapped to the Bank Frame for shipping purposes. Remove and set aside, until it is the time for installation (Section 7.13).

Tools:

Materials:

- Anchors (provided)

Procedure:

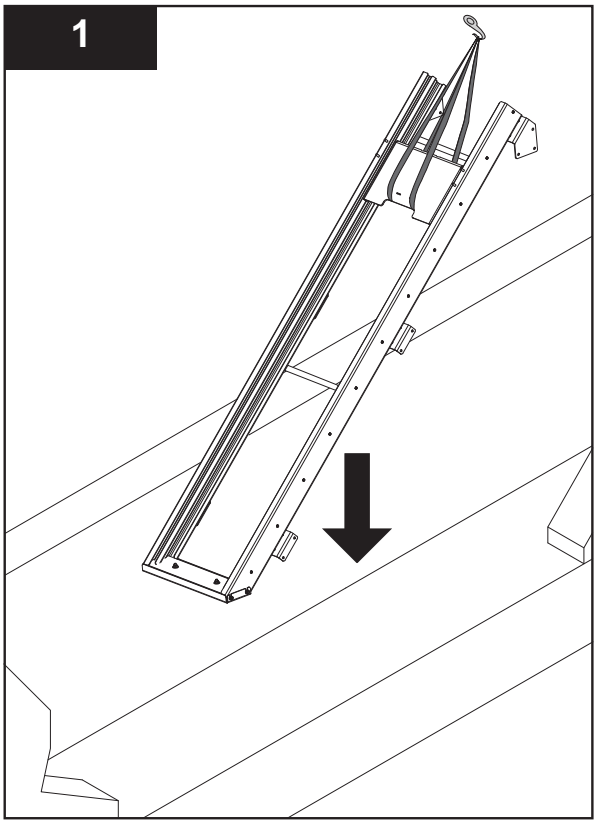

Note: *Make sure orientation of Frame Assembly aligns with layout drawings.*

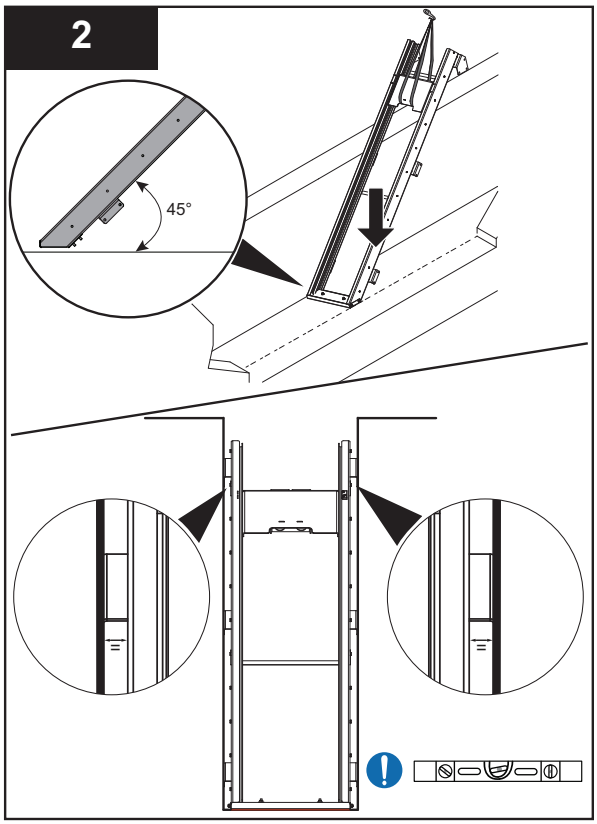

Note: *Level mounting frame assembly side to side and front to back.*

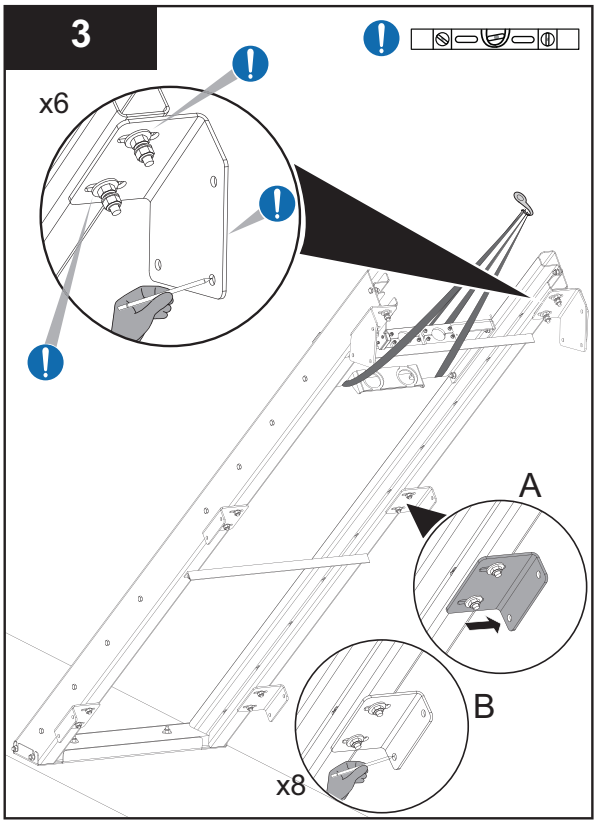

Notes: *1) Level the top brackets on the straight edges to ensure proper installation.*

2) Make sure the bracket hardware is loose and able to move freely.

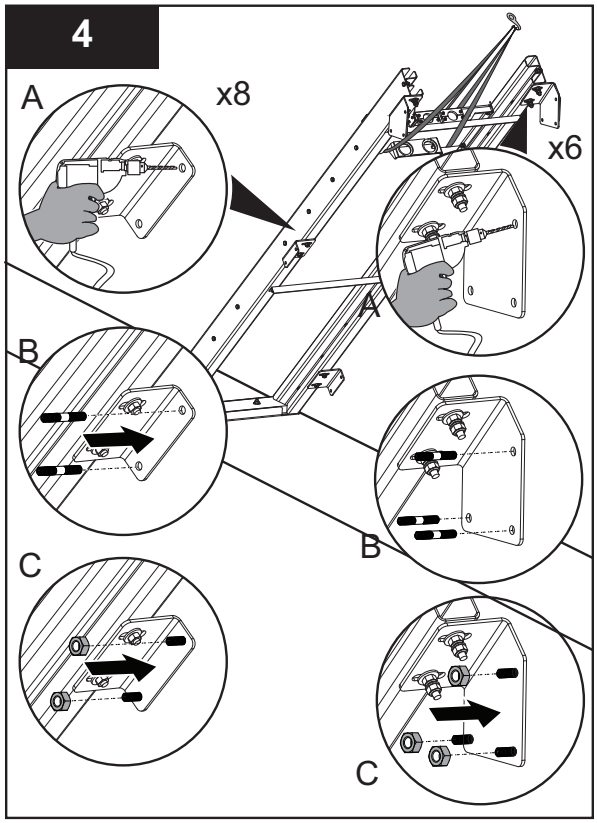

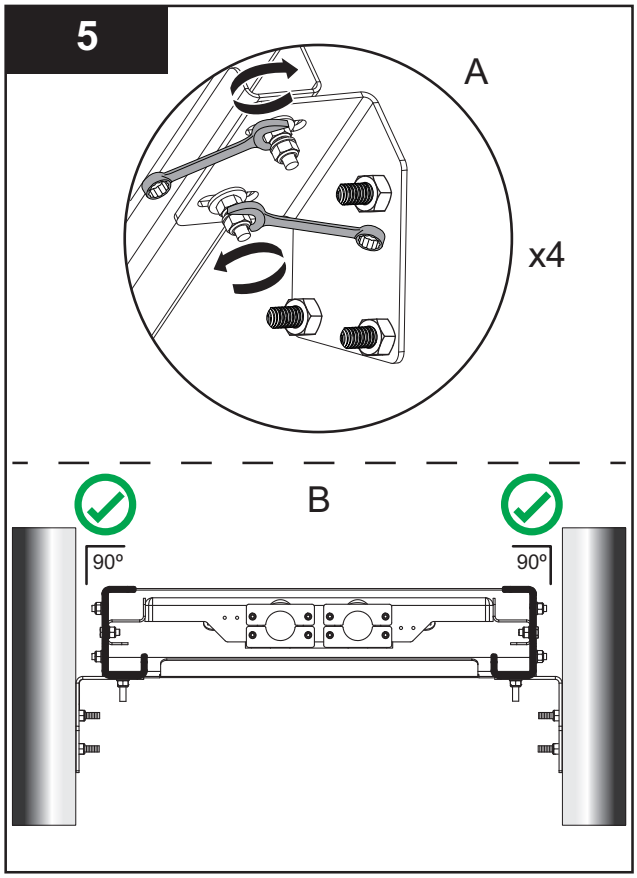

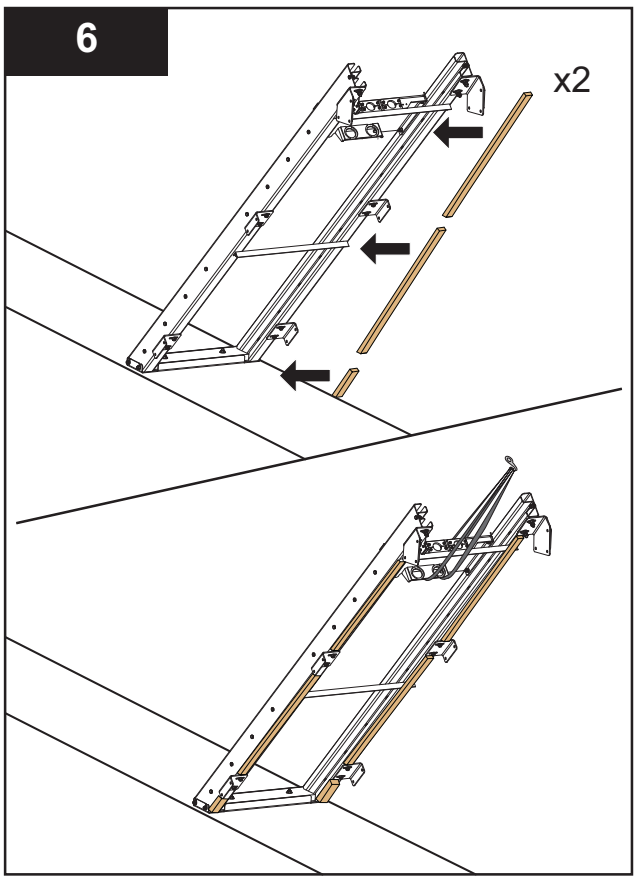

Note: *Apply anti-seize to fastening hardware.*

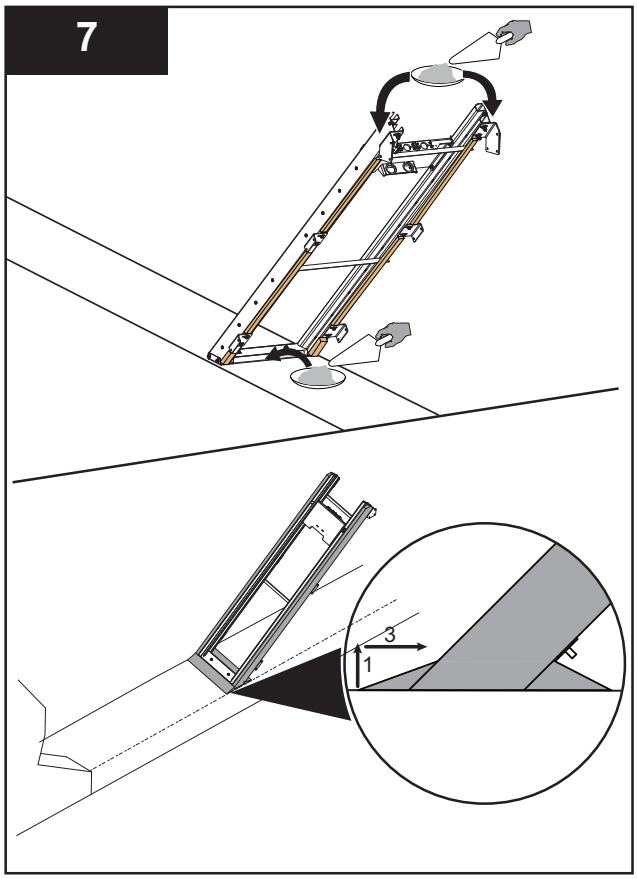

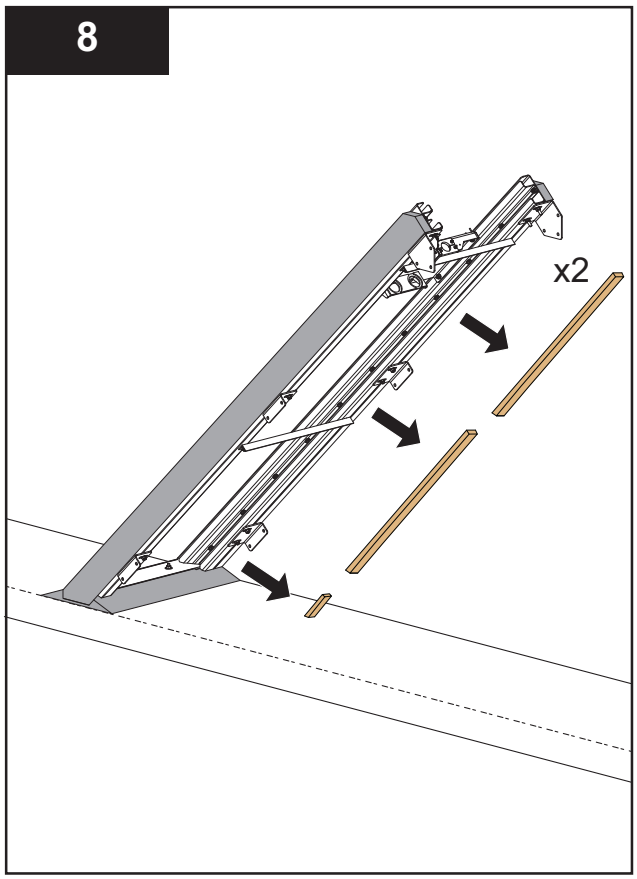

Note: *Place grout in between bank frame and channel wall. DO NOT allow grout to fill the inside slots of the bank frame.*

Note: *Remove wood forms after grout has completely dried.*

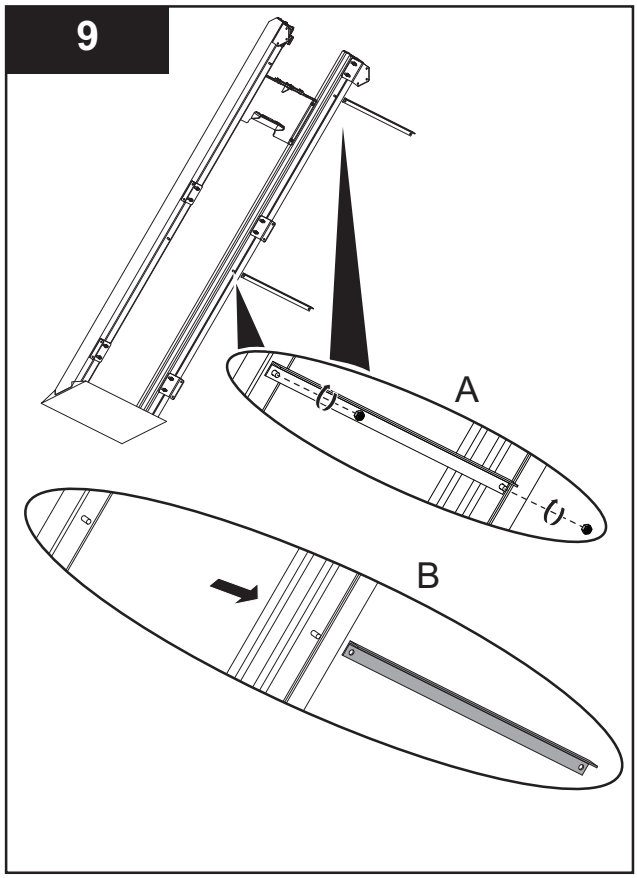

Note: *The angle braces can be recycled where facilities exist.*

7.6 UV Bank

7.6.1 Install UV Bank(s)

Prerequisites:

- Clean and remove all debris from the UV Channel and from the Bank Frame Assembly.
- Install Bank Frame Assembly. Refer to Section 7.5.
- **Remove Bank Lift Cylinder brackets from hydraulic cylinder mounts located at the top of the UV Bank. Set aside.**

Tools:

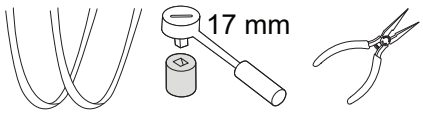

- Hoist Ring (x2)

Materials:

- Cylinder Brackets (provided)
- Cylinder Bracket hardware (provided)

Procedure:

Install:

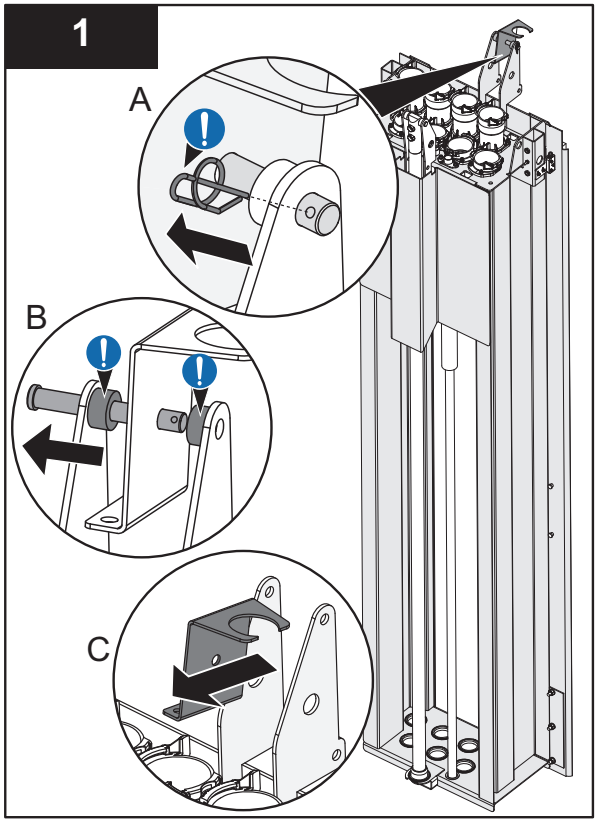

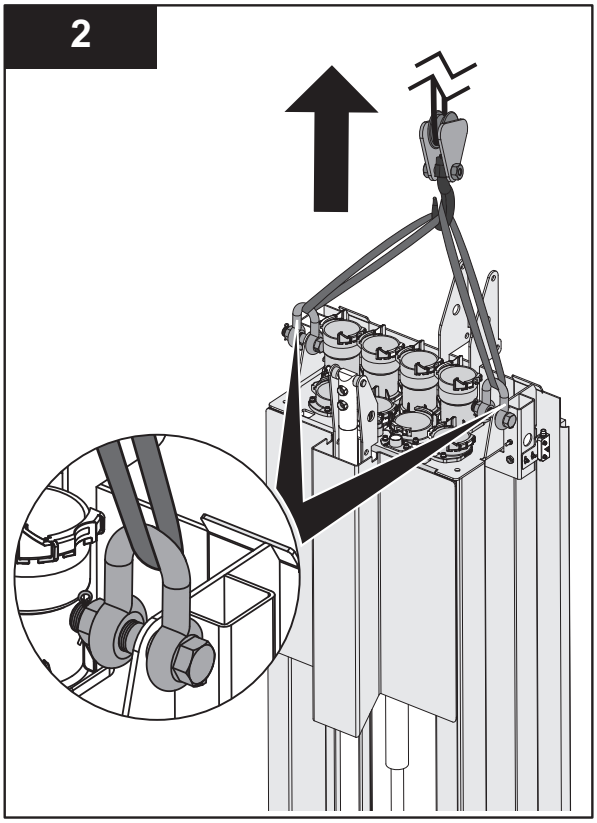

Note: *Retain the lock pin and bushings for later use.*

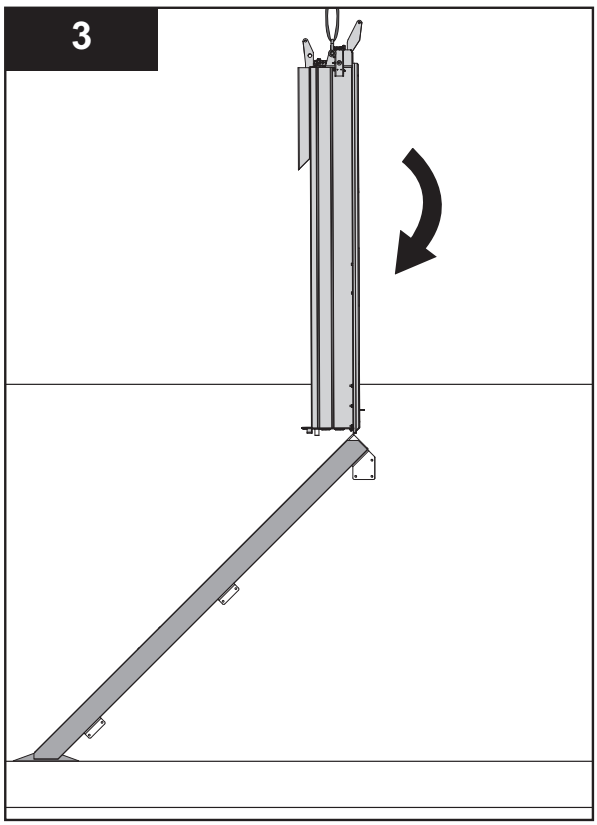

Note: *Once the UV Bank touches the frame, begin to lower the crane boom to allow the UV Bank to slide into the track.*

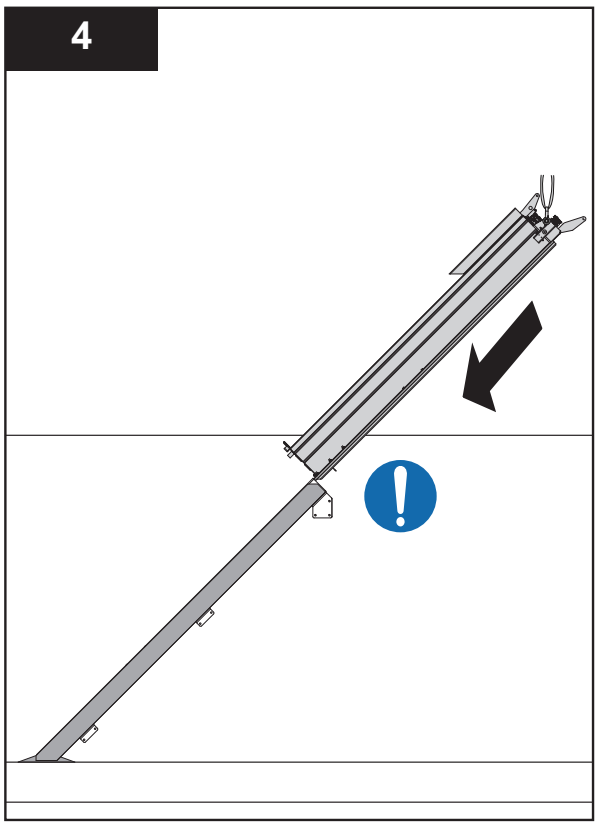

Notes: *1) Ensure that the guide rails line up with the slots in the channel mounting frame.*
2) Do not damage the UV Bank seal during installation.

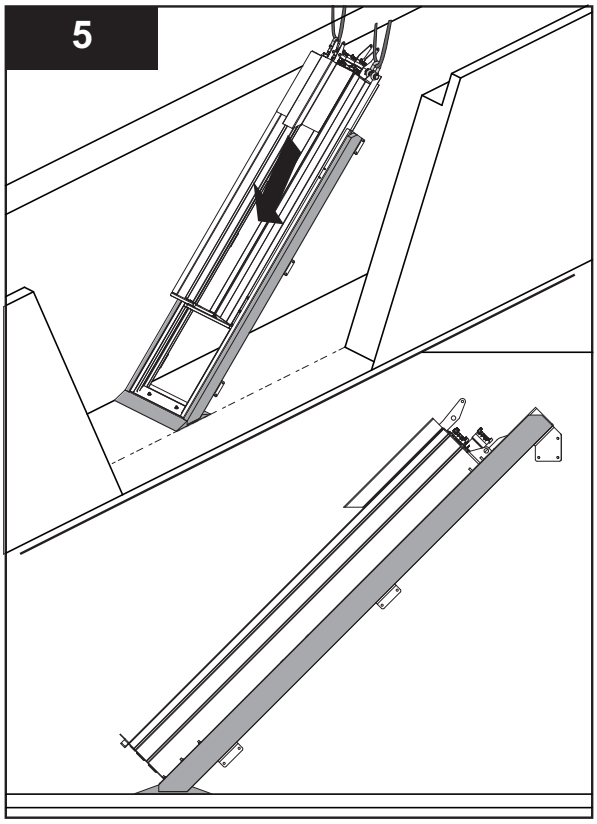

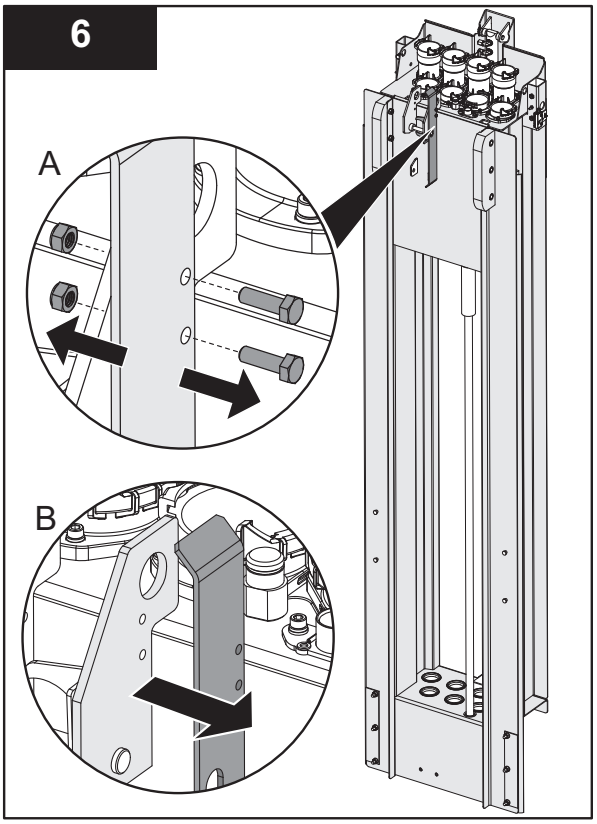

Note: *Retain the guide bracket and mounting hardware for later use.*

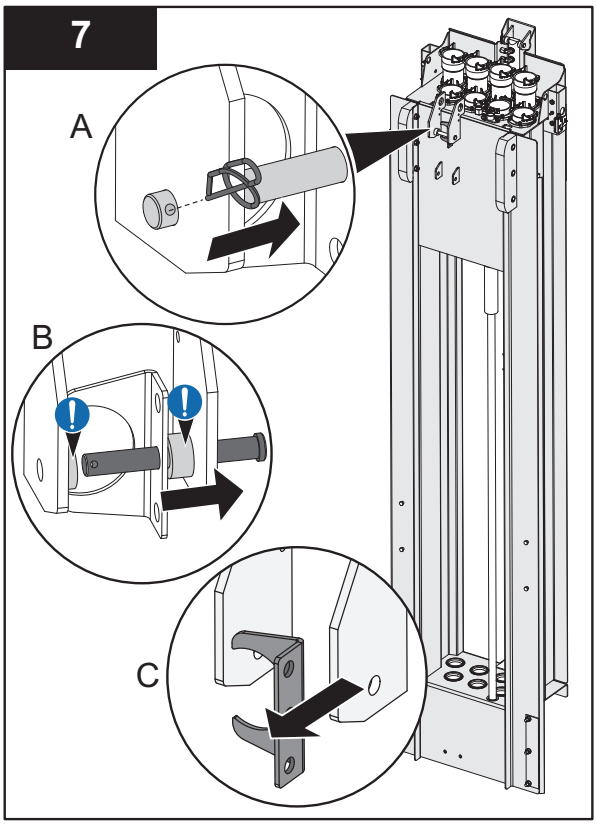

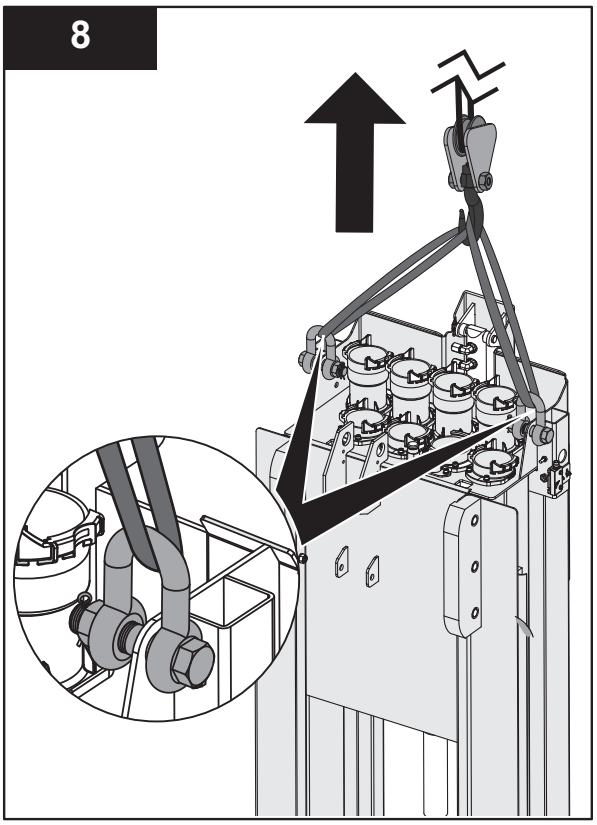

Note: *Retain the lock pin and bushings for later use.*

9

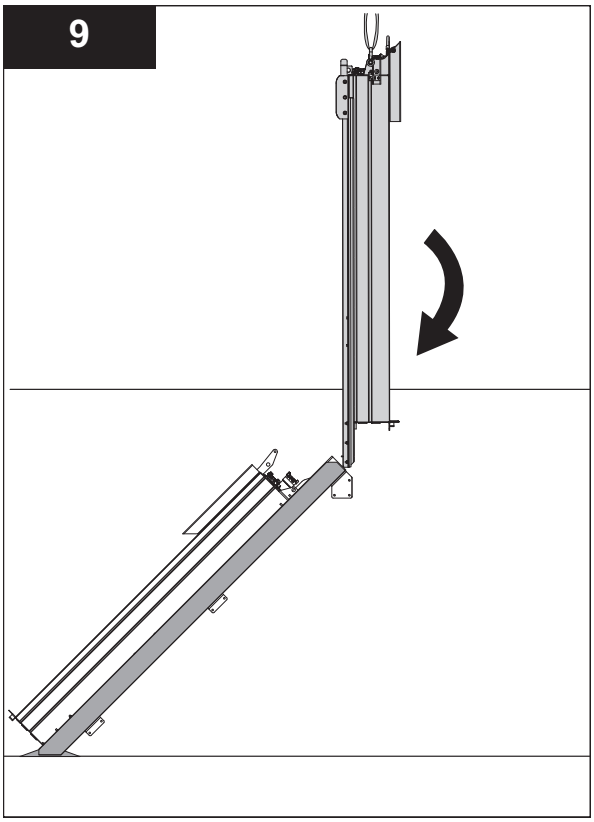

Note: *Once the UV Bank touches the frame, begin to lower the crane boom to allow the UV Bank to slide into the track.*

10

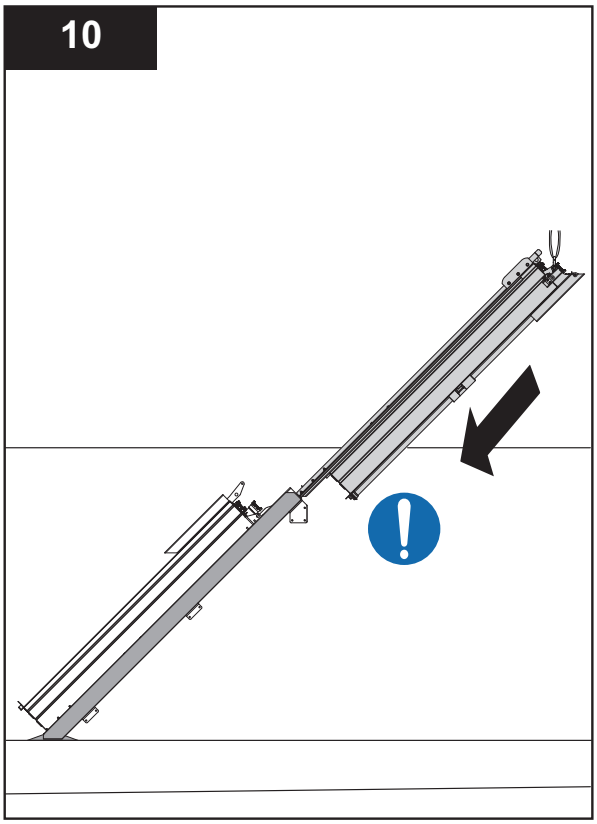

Notes: *1) Ensure that the guide rails line up with the slots in the channel mounting frame.*
2) Do not damage the UV Bank seal during installation.

11

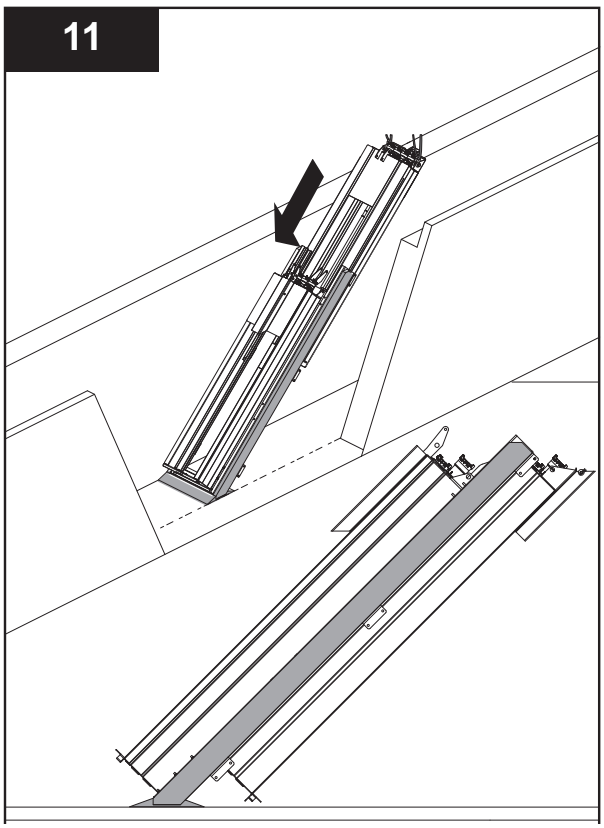

12

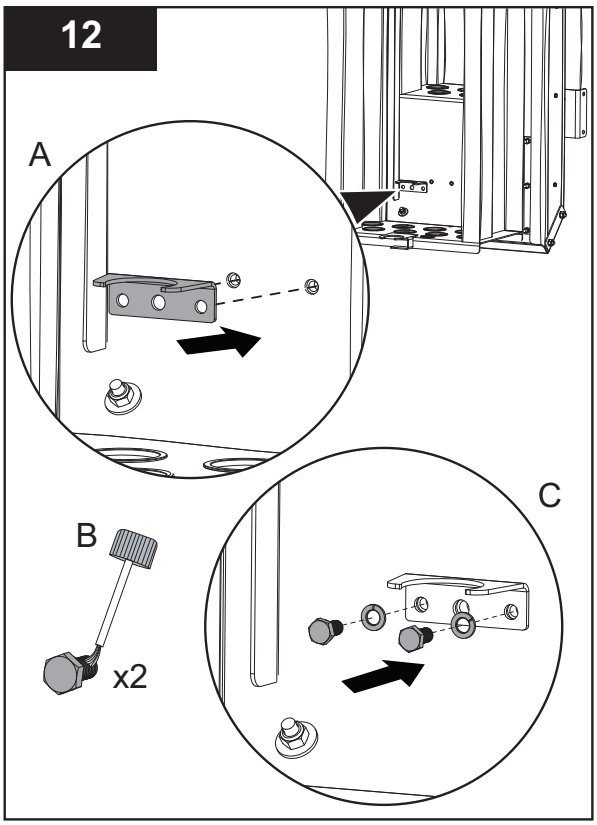

Note: *Install Bank Lift Cylinder Brackets.*

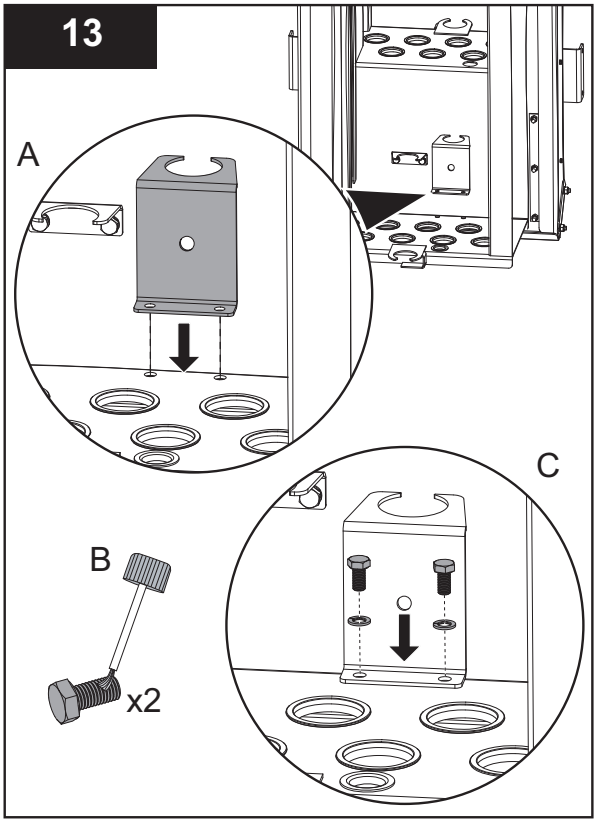

7.6.2 Install Bank Lift Cylinders

Prerequisites:

- Install UV Bank. Refer to Section 7.6.1.

Tools:

Materials:

Procedure:

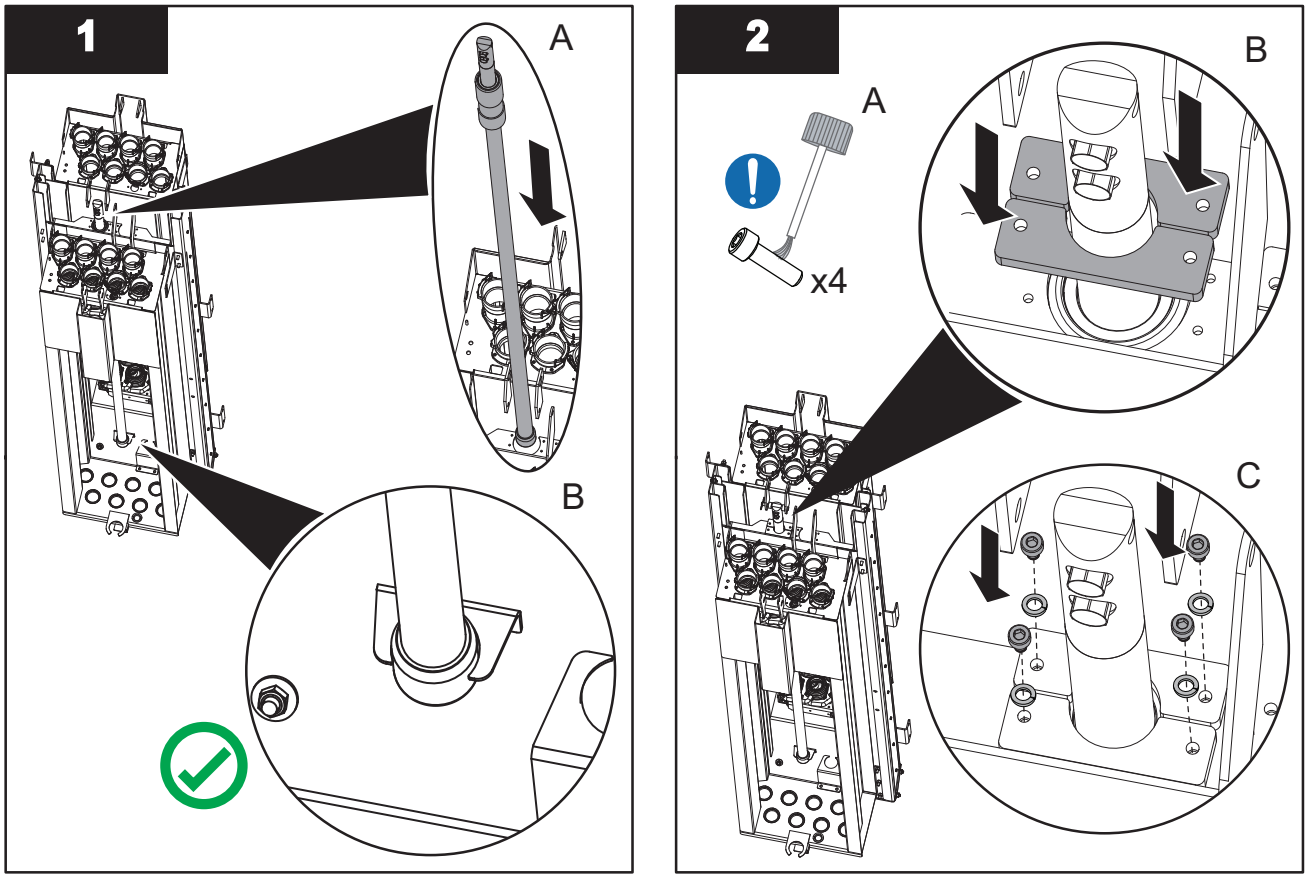

3. Repeat procedure for remaining lift cylinder.

7.7 UV Bank in Place Sensor

Prerequisites:

- Lift UV Bank down. Refer to Section 8.1.2.
- Lockout Tag Out devices as required. Refer to Section 4.
- Install partial grating as per site requirements.

Tools:

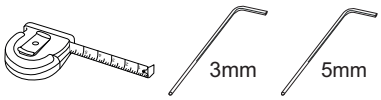

Materials:

Procedure:

NOTICE
The Bank In Place Sensors and the spacers are shipped attached to the UV Banks and Bank Frame. Adjust as required.

Bank A Side Installation

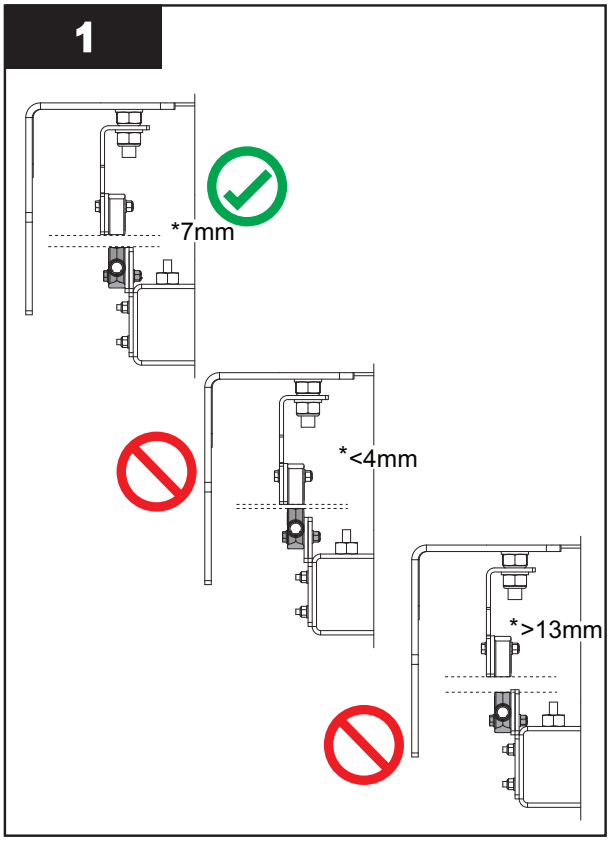

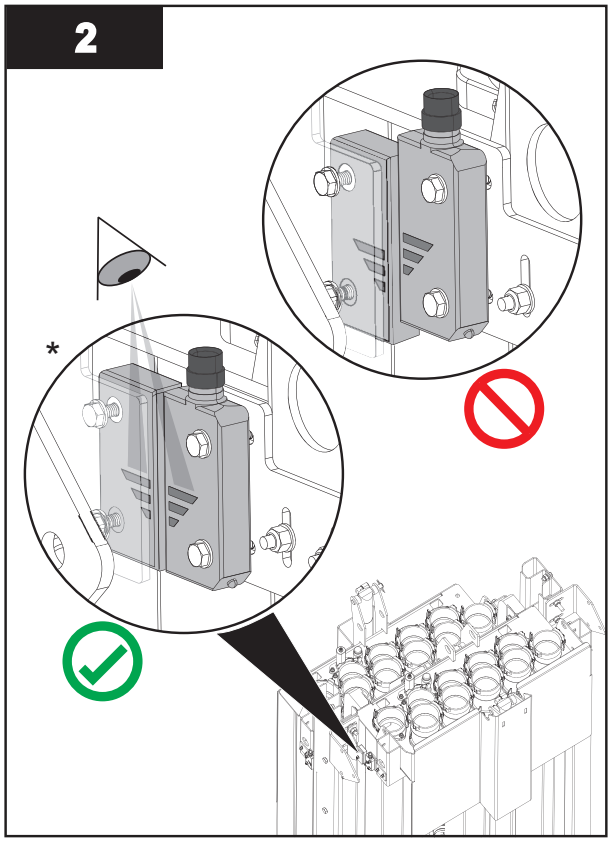

Note: *Adjust and align sensor to ensure there is a 7mm gap between sensors.*

** Sensor bracket is opaque.*

Bank B Side Installation

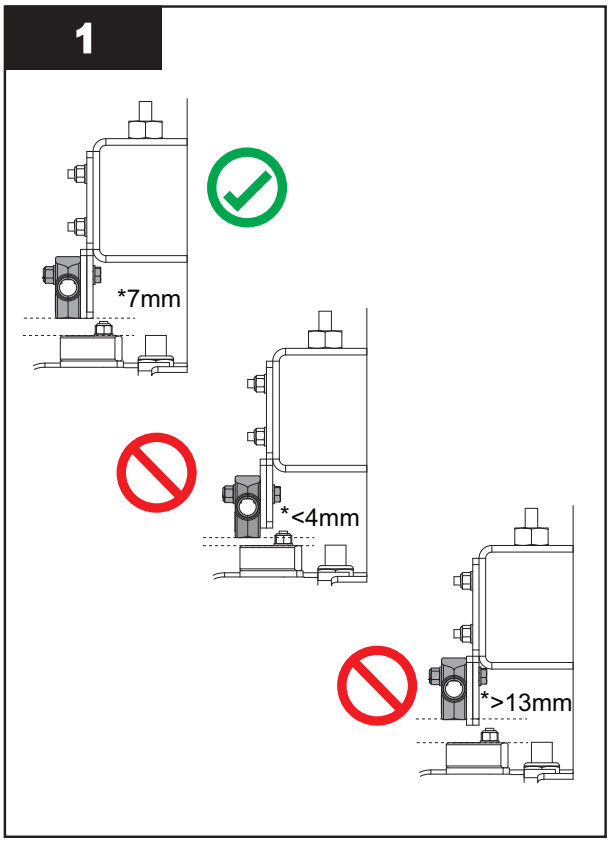

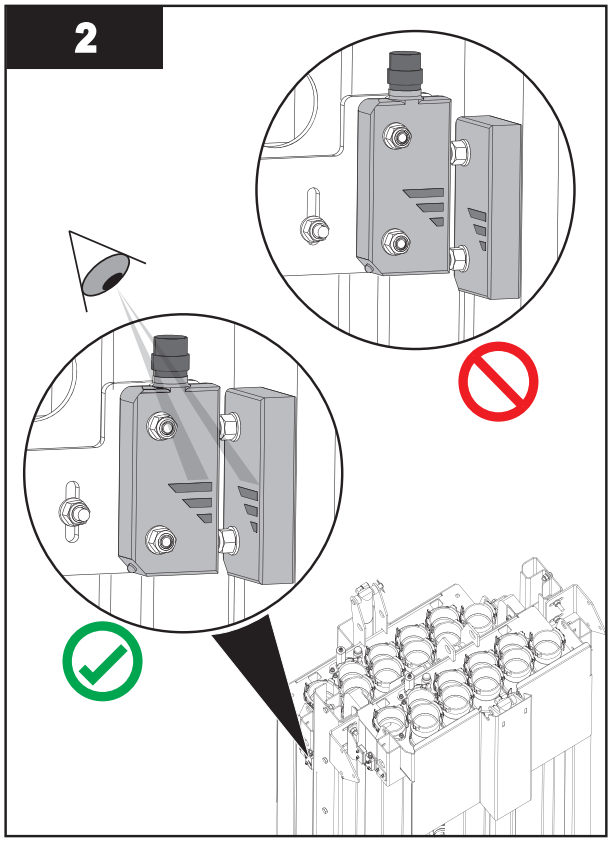

Note: *Adjust and align sensor to ensure there is a 7mm gap between sensors.*

7.8 Cable and Wire Routing

7.8.1 Lamp Cables

Procedure:

1. Route a lamp cable from the UV Bank to the PDC. Refer to Layout Drawing.

   Note: *It is recommended to install temporary cable labels at each end of the Lamp Cables, for example on Bank 1A, Lamp Cable 1, attach a label to each end indicating Bank1-1A or similar.*

2. Repeat step 1 for each Lamp Cable.

7.8.2 Field Wire(s)

Procedure:

1. Route all field wiring (i.e. Bank in Place Sensor, UVI Sensor) to the PDC. Refer to UV Layout Drawing.
2. Repeat step 1 for all field wiring connections to appropriate PDC.

7.8.3 Bond Wire(s)

Procedure:

1. Install a bond wire onto the UV Bank and route the bond wire to corresponding PDC. Refer to Layout Drawing and Figure 5.

   Note: *Each UV Bank is required to have a dedicated bond wire.*

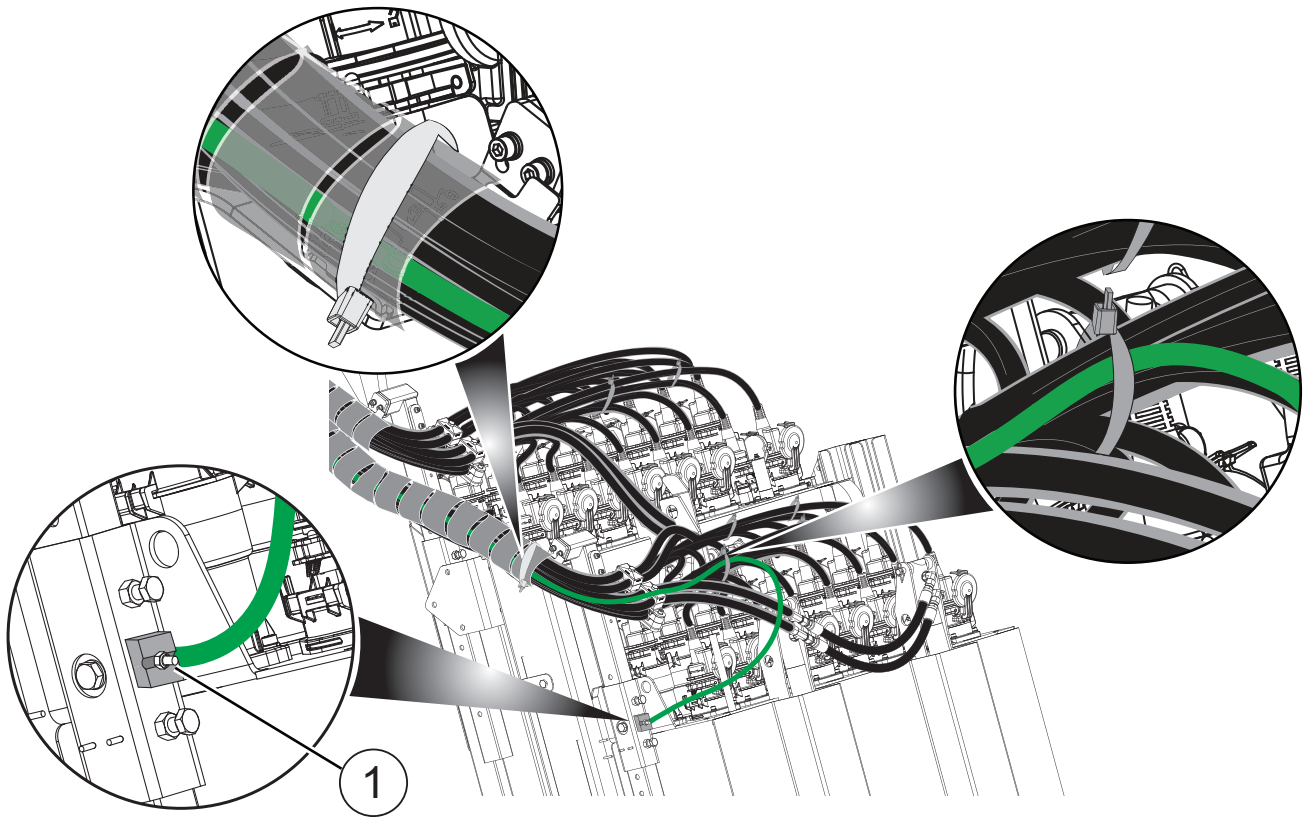

Figure 5 Bonding Post

1	Bonding Post

Note: *Cable spiral wrap is to be installed at a later time.*

7.9 Hydraulic Hose

7.9.1 Connect the Hydraulic Hoses to the Lift and Wipe Cylinders

Prerequisites:

- Install HSC. Refer to Section 7.4.1.
- Install Cable Management Assemblies. Refer to Section 7.10.1.

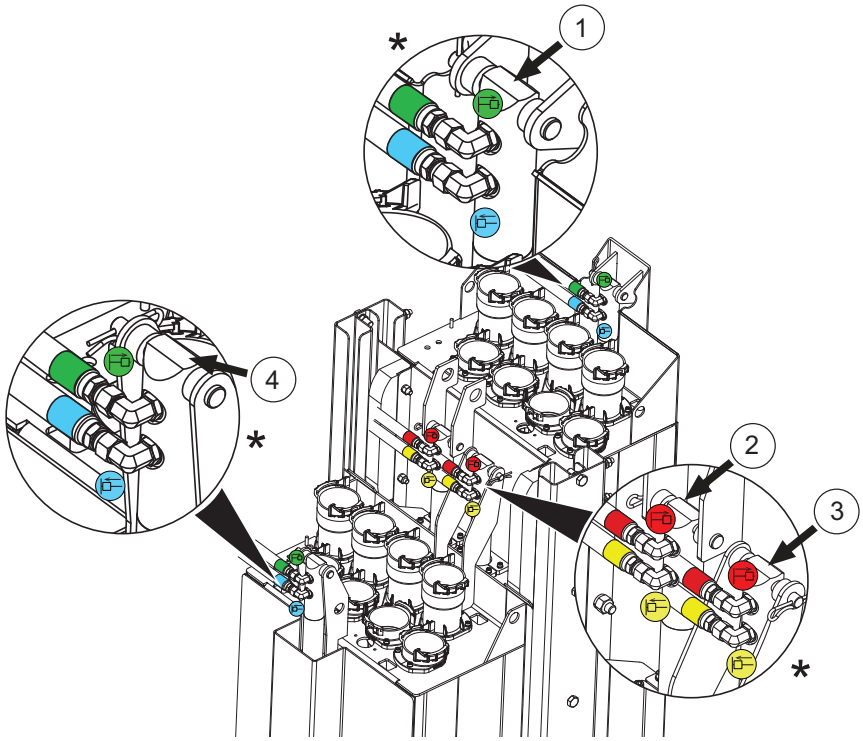

Figure 6 Hydraulic Hose Connections

1	Bank A or Bank C Wipe Cylinder	**3**	Bank B or Bank D Lift Cylinder
2	Bank A or Bank C Lift Cylinder	**4**	Bank B or Bank D Wipe Cylinder

** Hydraulic hoses can be routed to either the left or right side of the cylinders. Route the hydraulic hoses toward the cable trough.*

Tools:

Materials:

- Plastic hose fitting plug (Shipped attached to hydraulic hoses)

  Note: *Remove the hose fitting plugs and set aside for later use.*
- Hydraulic Hoses
- Colored Bands - cut to 25mm (1 inch) length

Procedure:

1. Route Hydraulic Hose from the UV Bank to the appropriate HSC. Refer to Layout Drawing. Refer to Table 2 for recommended hose installation order.

   Note: *Refer to Section 7.10 for Hydraulic Hose Routing in Cable Management Assemblies.*

Table 2

Connect hoses in order:	Bank / Cylinder Connection Point	Corresponding HSC Connection Point
First	Bank A Lift Cylinder, Retract*	HSC - Lift, Retract*
Second	Bank A Wipe Cylinder, Retract*	HSC - Wipe, Retract*
Third	Bank B Lift Cylinder, Retract*	HSC - Lift, Retract*
Fourth	Bank B Wipe Cylinder, Retract*	HSC - Wipe, Retract*
Fifth - continue with Bank C* and so on		

* Refer to Figure 6 for connection locations.

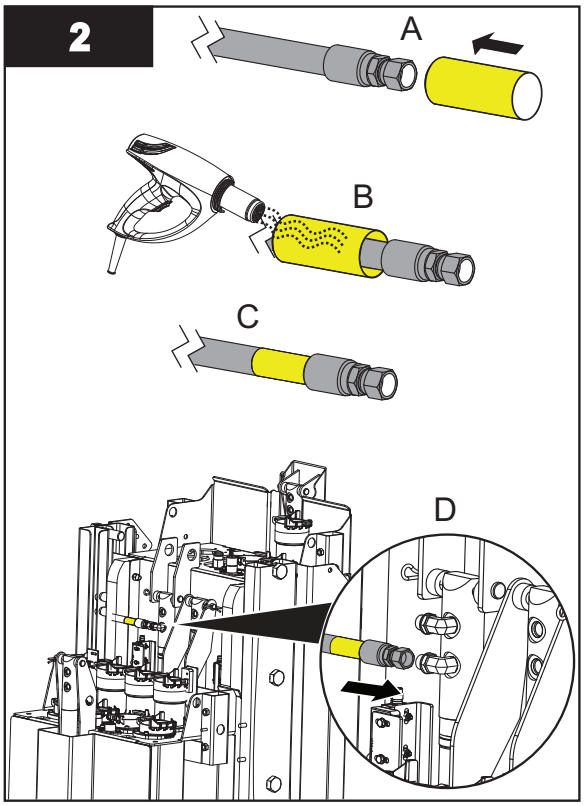

Notes: *1) Install corresponding colored band onto the hydraulic hose (Refer to Figure 6).*

2) Temporarily mark opposite end of hose.

3) Route the hose to the corresponding HSC.

Notes: *1) Ensure that the hose is not kinked, twisted or bent and that there is enough slack while the hoses are in use.*

2) Number of connections depends on the site requirements.

Example - Lift Cylinder Circuit

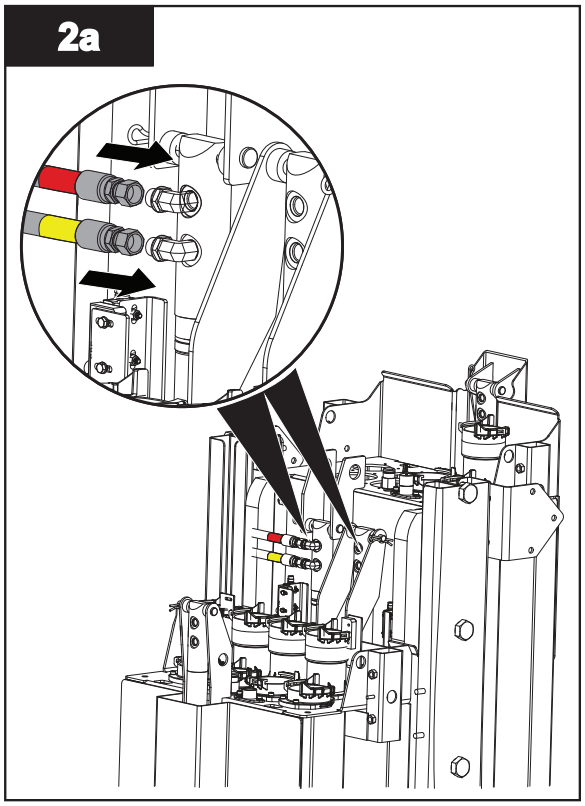

Example - Wipe Cylinder Circuit

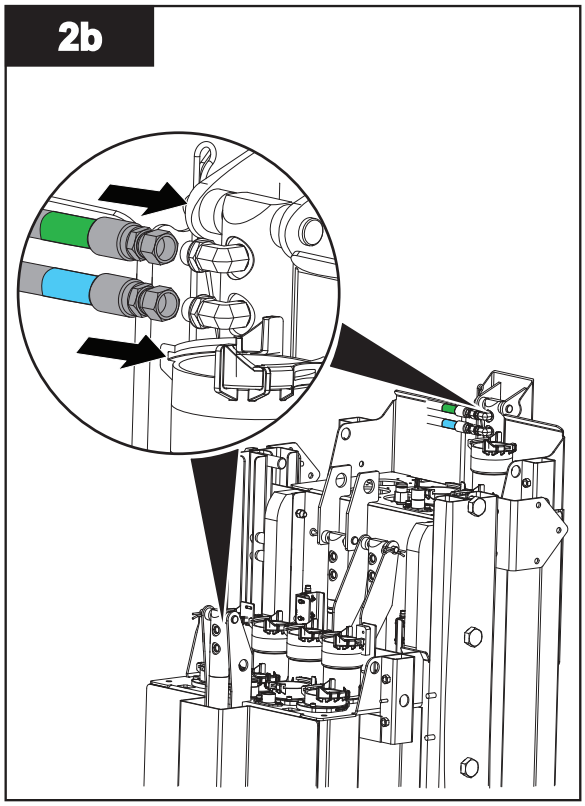

7.10 Cable Management

The cable management brackets organize the hydraulic hoses, lamp cables, bond wire, and UVI sensor cable and Bank In Place cable. One cable management bracket per UV Bank is required.

Cable management brackets may be supplied in left and/or right sided configurations. Refer to Figure 7 for left and right handed UV Bank designations. Refer to the project layout drawings for additional information regarding the cable management bracket location. Cable management brackets are provided in either standard channel depth or deep channel depth (Figure 8). Follow the Cable Management Assembly - Figure 8 and match project details.

Refer to DC000601-017 for installation guidelines for TrojanUV Solo Lamp Cable installation.

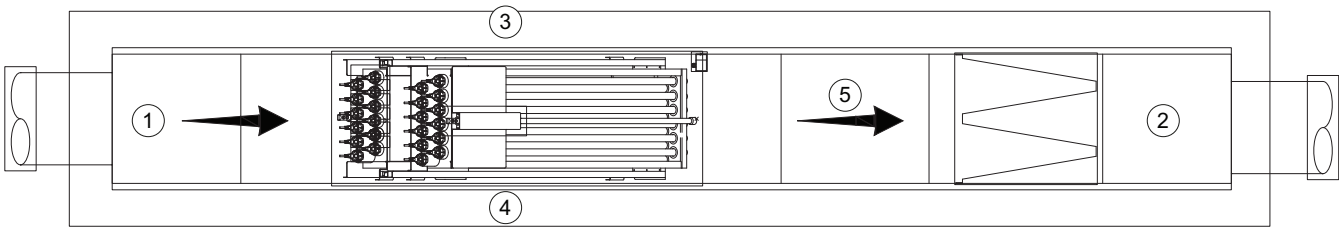

Figure 7 UV Bank Designation

1	Upstream of UV Bank(s)	**4**	Right side of UV Bank(s)
2	Downstream of UV Bank(s)	**5**	Effluent flow direction
3	Left side of UV Bank(s)		

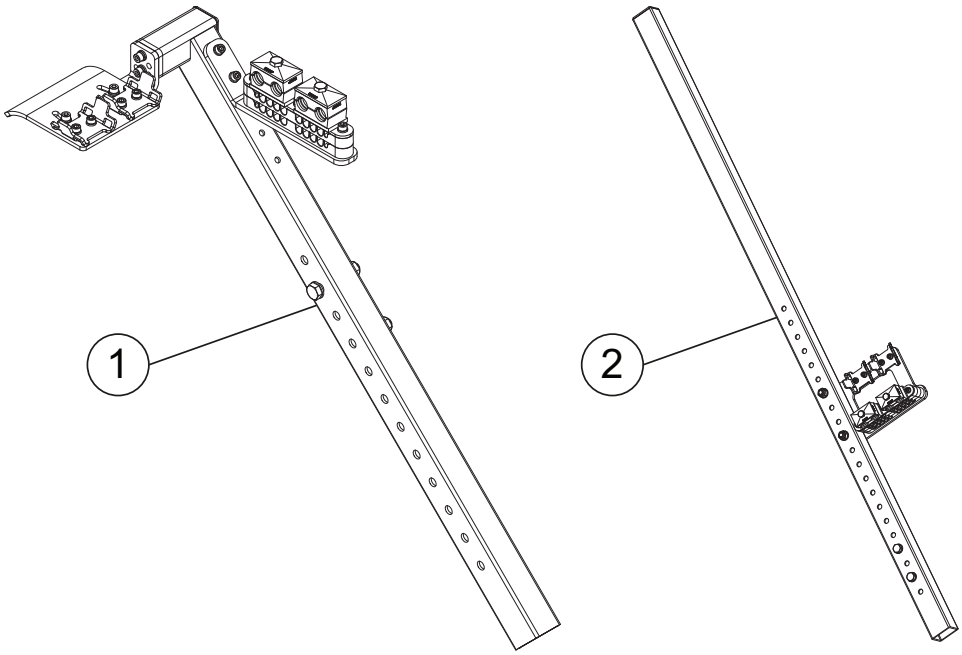

Figure 8 Cable Management - Assemblies

1	Standard Channel Bracket **(Right sided shown)** [Used for Channel Depths up to 233.7 cm (92 inches)]	**2**	Deep Channel Bracket **(Left sided shown)** [Used for Channel Depths greater than 233.7 cm (92 inches)]

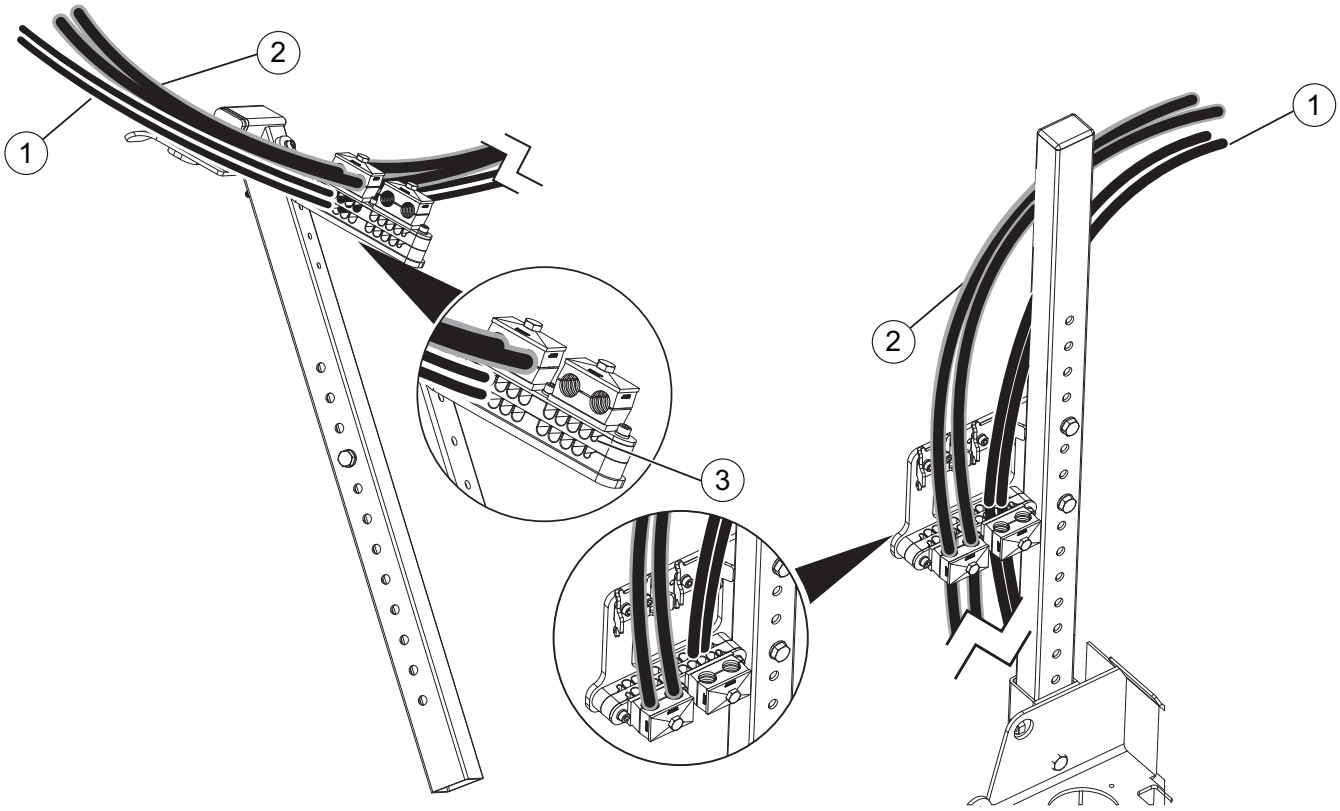

Figure 9 Lamp Cables and Hydraulic Hoses Routing

1	Lamp Cables	**3**	Field Wiring (i.e. UVI Sensor, Bank in Place, Bond Wiring)
2	Hydraulic Hoses		

Note: *Only a few Lamp Cables and Hydraulic Hoses are shown for clarity purpose.*

7.10.1 Install Cable Management Assemblies on UV Bank

Prerequisites:

- Refer to the project layout drawings for installation location.
- Install UV Bank. Refer to Section 7.6.1.

Tools:

Materials:

- Bracket Mounting Hardware (provided)

Procedure:

Note: *Follow the appropriate procedure for the Bracket Assembly type provided (i.e. Standard Channel or Deep Channel).*

Standard Channel Bracket Assembly

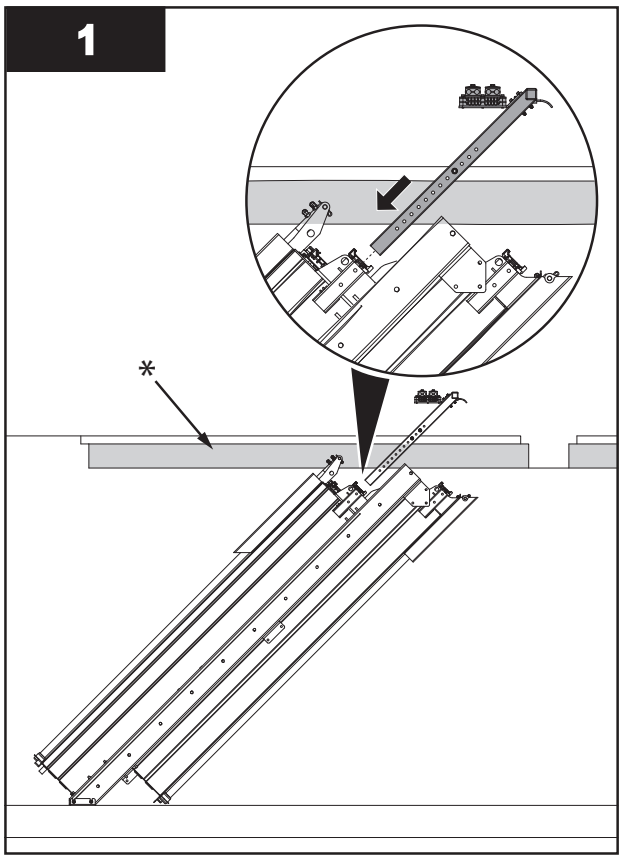

** Staging Area (Wireway)*

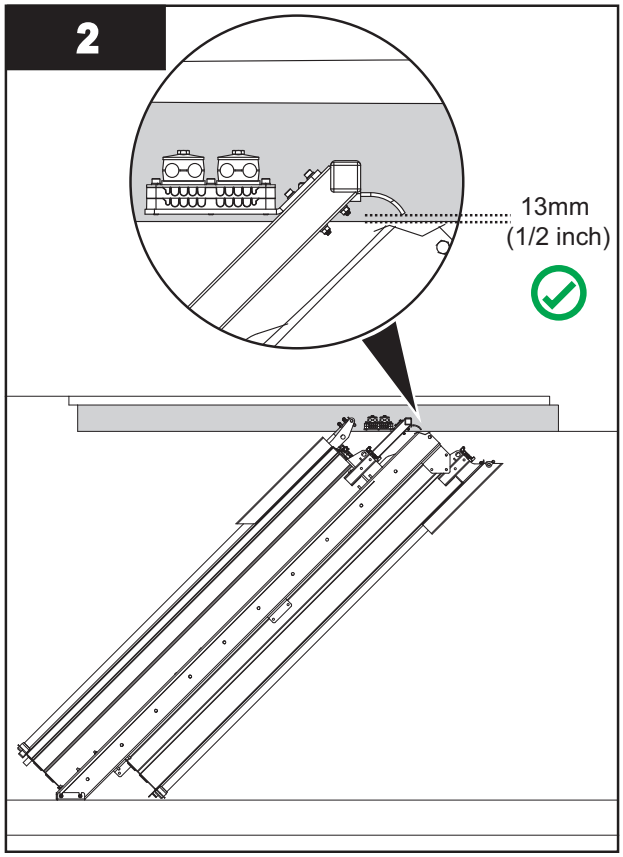

Note: *Adjust bracket arm up or down.*

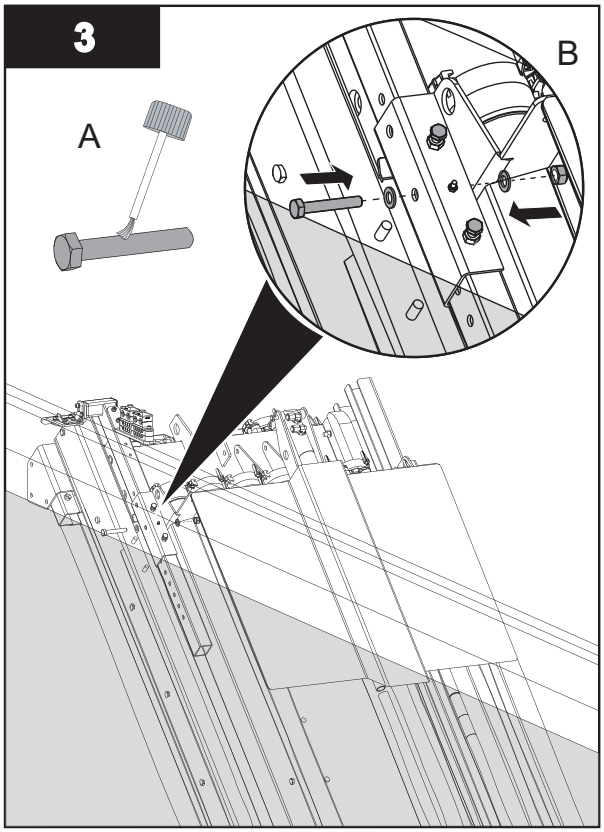

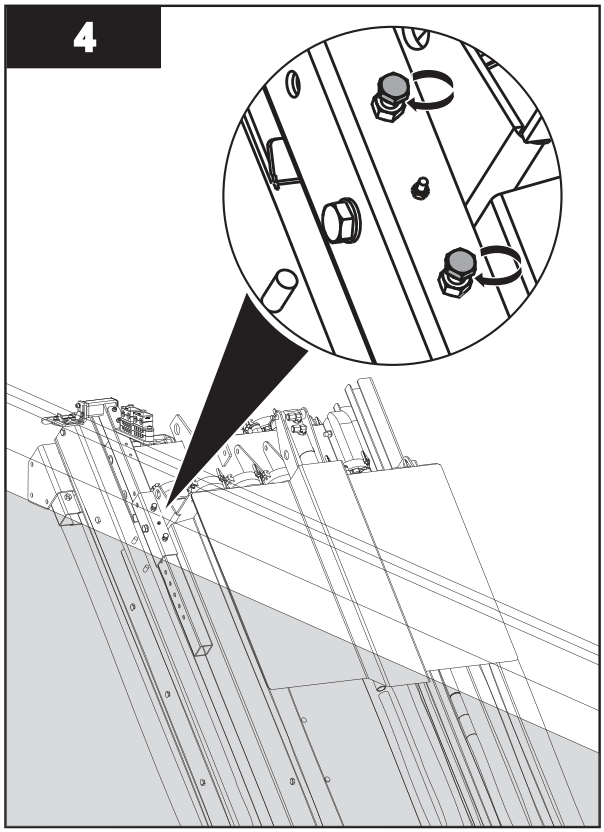

Note: *Tighten Jam Nuts/Bolts to secure Cable Management Assembly.*

Deep Channel Bracket Assembly

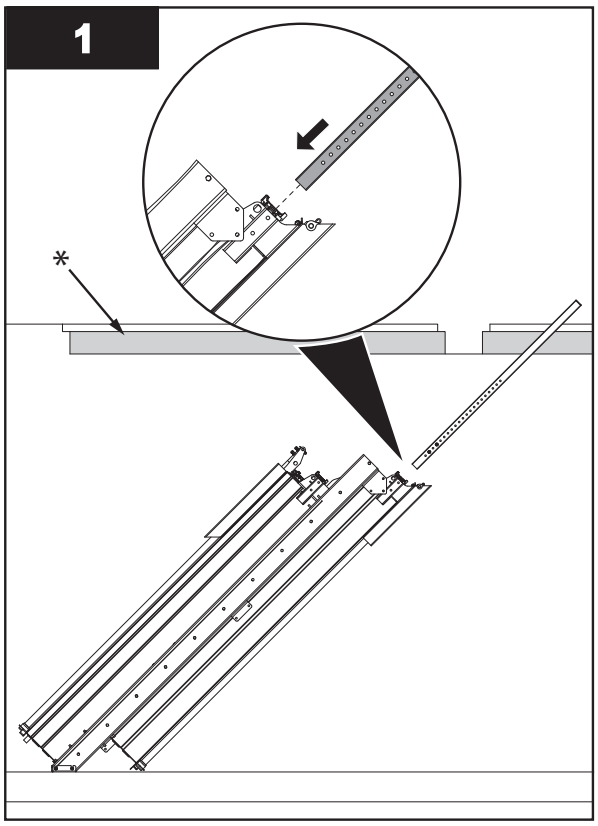

** Staging Area (Wireway)*

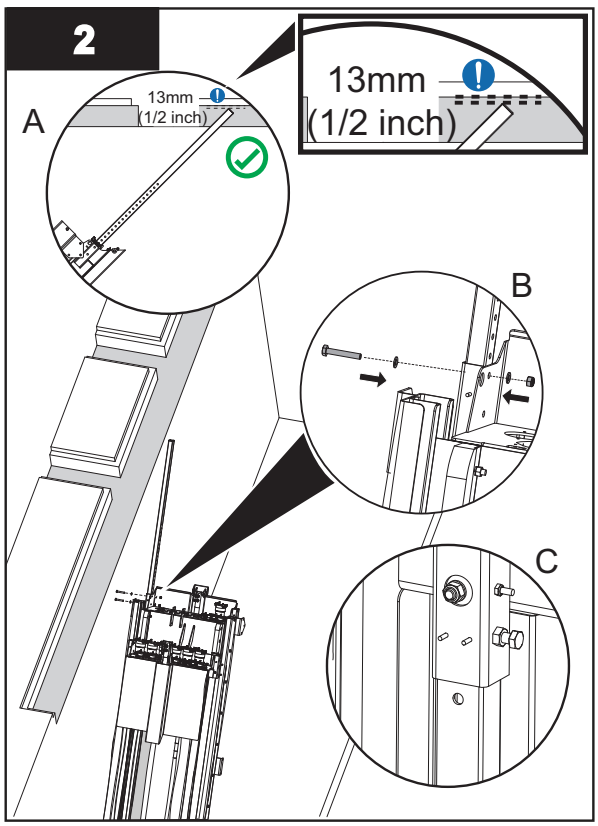

Note: *Distance to be minimum 13mm (1/2 inch) below underside of grating.*

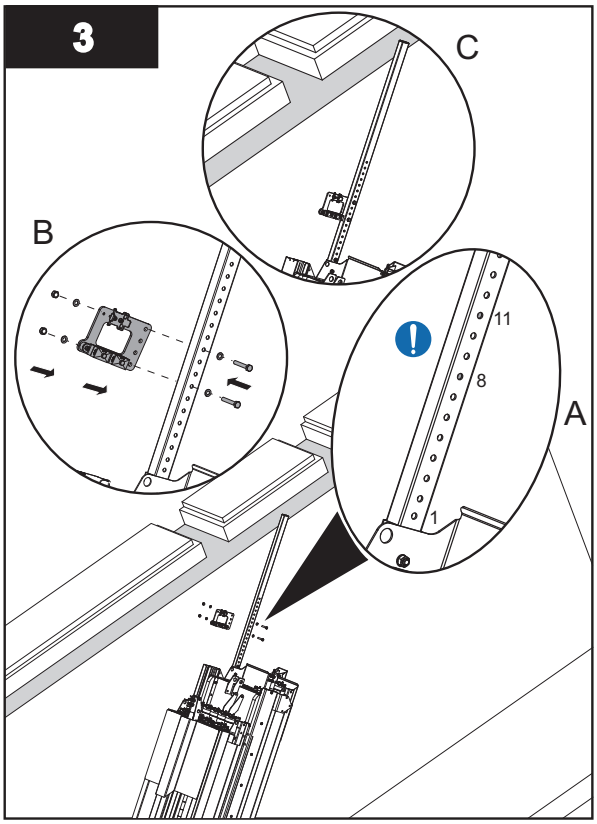

Notes: *1) Secure the bracket onto the 8th and 11th holes as shown above the first exposed hole.*
2) Bracket installation may be done later, when the UV Bank is lifted.

7.10.2 Install Lamp Cables and Hydraulic Hoses in Bracket Assemblies

Prerequisites:

- Install Cable Management Assemblies. Refer to Section 7.10.1.
- Install Hydraulic Hoses. Refer to Section 7.9.

Materials:

- Cable Ties
- Cable Spiral Wrap or Cable Track
- **TrojanUV Solo Lamp Cable Installation Guideline Instruction, document number DC000601-017.**

Procedure:

1. Route Lamp Cables, Hydraulic Hoses, UV Bank in Place, UV Intensity Sensor Cable and Bond Wire into Bracket Assemblies.
2. If Spiral Wrap is supplied, wrap around the following:
   a. UV Bank Lamp Cables
   b. UV Bank Hydraulic Hoses

c. UV Bank in Place Sensor, UV Intensity Sensor and Bond Wire.

NOTICE

A maximum of twelve (12) Lamp Cable per spiral wrap bundle allowed.
Where there is greater than twelve (12) UV Lamps per UV Bank, split the Lamp Cables into two (2) separate spiral wrap bundles.

3. If cable track is supplied, the cable track installation will be completed in Section 7.15.
4. Refer to Figures (Figure 10, Figure 11 and Figure 12).

Cable Routing through Standard Bracket Assemblies - Spiral Wrap

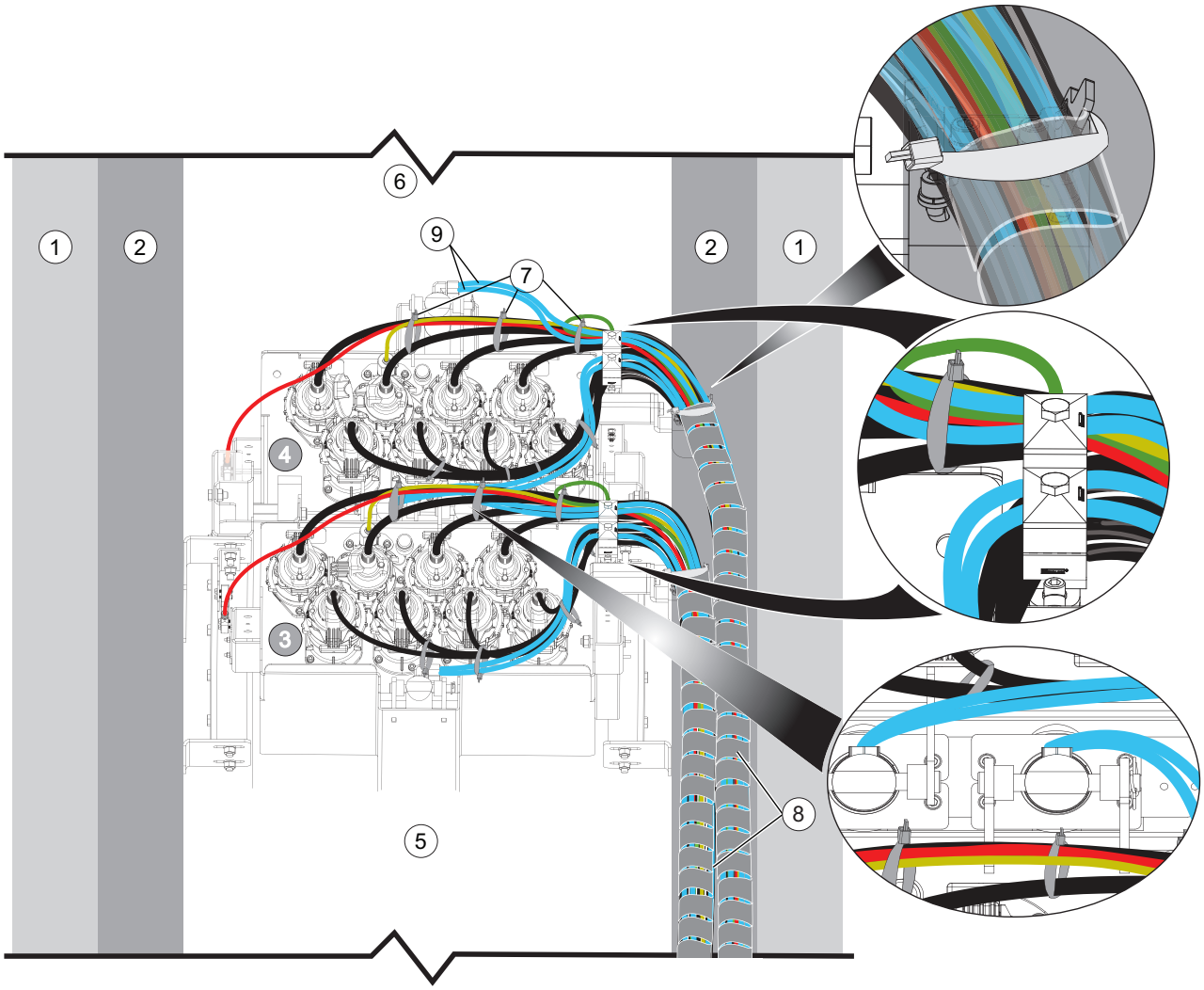

Figure 10 Cable Routing through Standard Bracket Assemblies - Spiral Wrap

1	Top of UV Channel Wall	**2**	Cable Trough*
3	Bank A	**4**	Bank B
5	Upstream	**6**	Downstream
7	Cable Ties	**8**	Cable Spiral Wrap
9	Hydraulic Hose**		

** One (1) cable trough per UV Channel is required. Cable trough is recommended to be located on the same side of the UV Channel as the PDC's.*

***Add enough hose slack to allow movement when removing lamp and/or lamp sleeve below hose.*

Cable Routing through Standard Bracket Assemblies - Cable Track

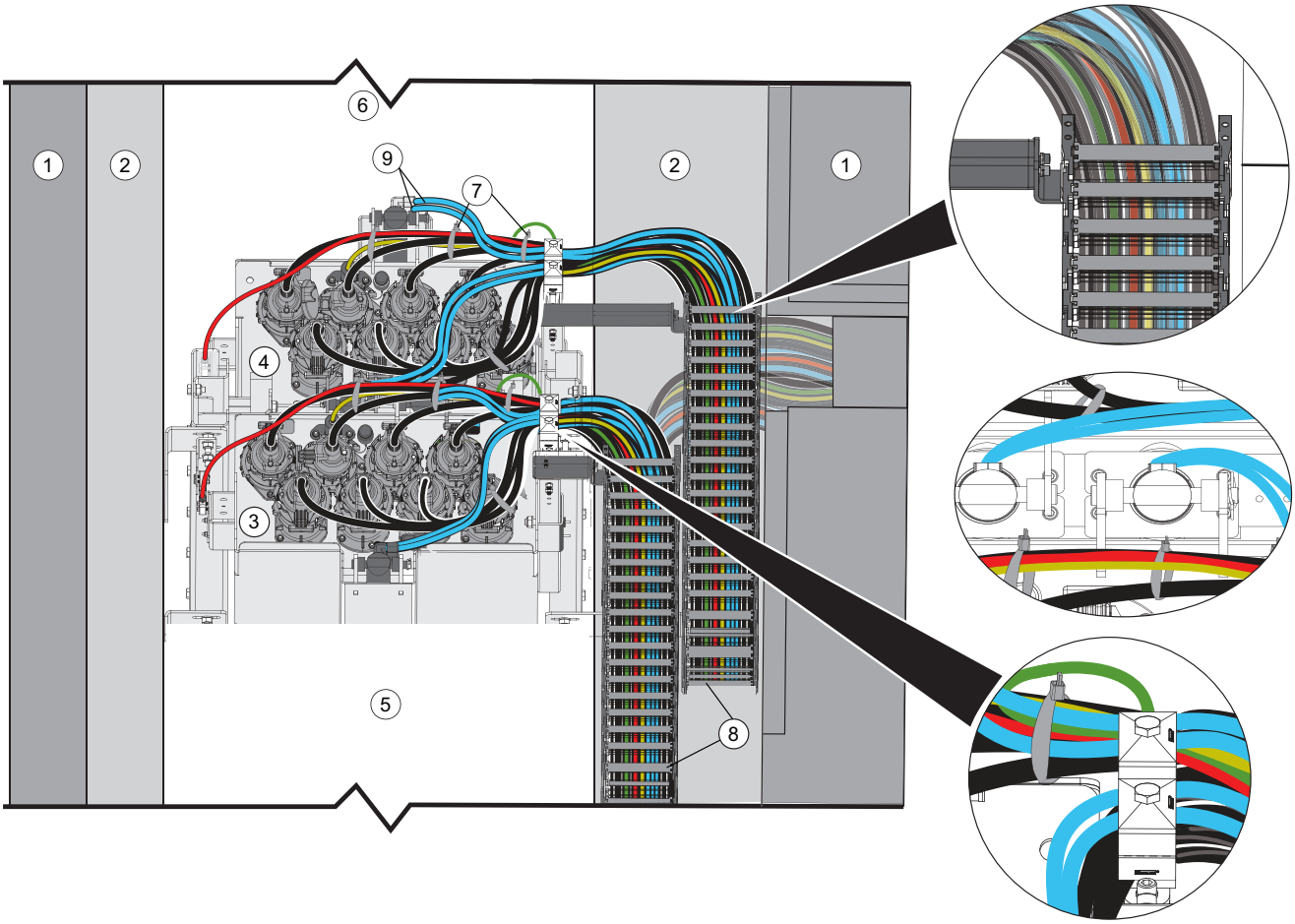

Figure 11 Cable Routing through Standard Bracket Assemblies - Cable Track

1	Top of UV Channel Wall	**2**	Cable Trough*
3	Bank A	**4**	Bank B
5	Upstream	**6**	Downstream
7	Cable Ties	**8**	Cable Track
9	Hydraulic Hose**		

** One (1) cable trough per UV Channel is required. Cable trough is recommended to be located on the same side of the UV Channel as the PDC's.*

***Add enough hose slack to allow movement when removing lamp and/or lamp sleeve below hose.*

Cable Routing through Deep Channel Bracket Assemblies - Spiral Wrap

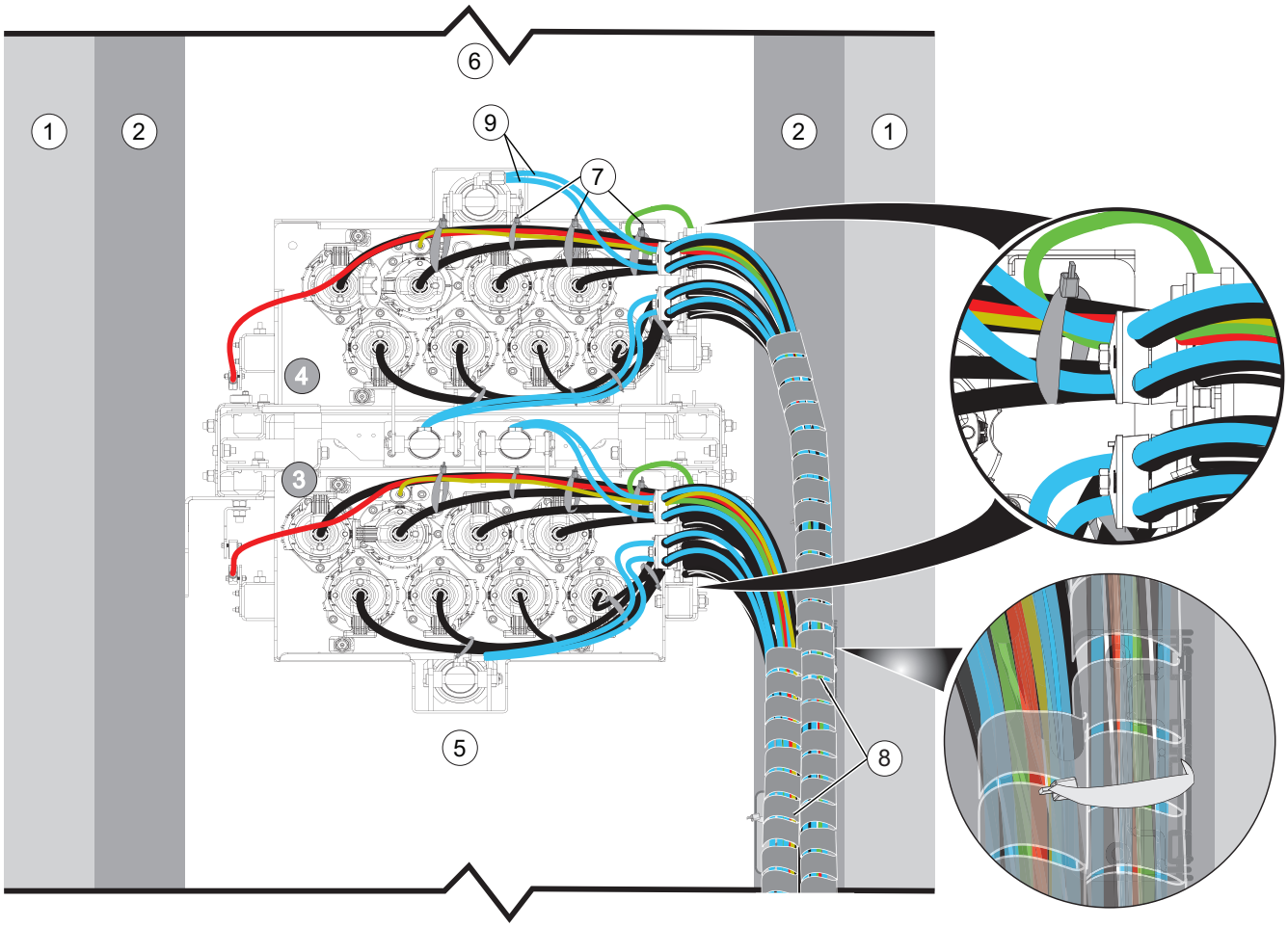

Figure 12 Cable Routing through Deep Channel Bracket Assemblies - Spiral Wrap

1	Top of UV Channel Wall	**2**	Cable Trough*
3	Bank A	**4**	Bank B
5	Upstream	**6**	Downstream
7	Cable Ties	**8**	Cable Spiral Wrap
9	Hydraulic Hose**		

** One (1) cable trough per UV Channel is required. Cable trough is recommended to be located on the same side of the UV Channel as the PDC's.*

***Add enough hose slack to allow movement when removing lamp and/or lamp sleeve below hose.*

7.11 Hydraulic Hose Connections

7.11.1 Hydraulic Hose Fittings and Connections

Each HSC is able to provide lift and wipe functions for up to four (4) UV Banks. Refer to the site layout drawings and electrical drawings provided to determine the number of UV Banks that the HSC will provide lift and wipe functions for.

Prerequisites:

- Install HSC. Refer to Section 7.4.1.
- Install Cable Management Assemblies. Refer to Section 7.10.1.

Tools:

Materials:

- **Field Connect Hose Fittings Instruction, document number DC000601-019.**

Procedure:

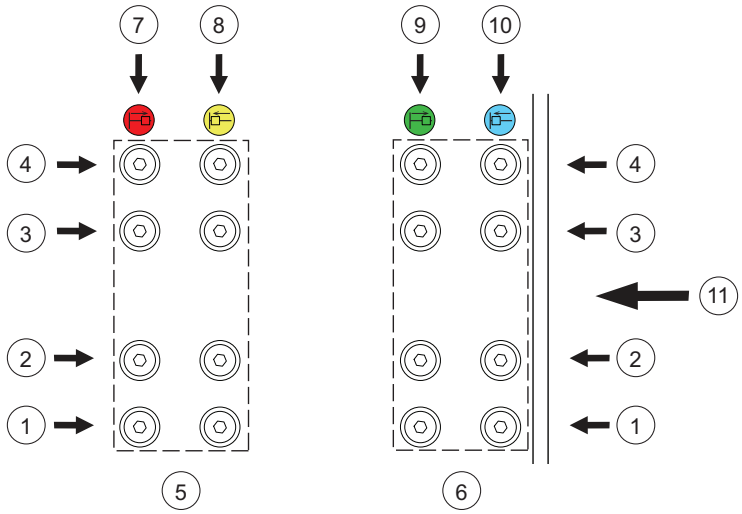

Figure 13 Hydraulic Hose Connections at HSC

1	Bank A	**7**	Lift Extend = Red color
2	Bank B	**8**	Lift Retract = Yellow color
3	Bank C	**9**	Wiper Extend = Green Color
4	Bank D	**10**	Wiper Retract = Blue Color
5	Lift Circuits	**11**	Front of HSC
6	Wiper Circuits		

Refer to Table 3 for recommended hose installation order.

Table 3

Connect hoses in order:	Bank / Cylinder Connection Point	Corresponding HSC Connection Point
First	Bank A Lift Cylinder, Retract*	HSC - Lift, Retract*
Second	Bank A Wipe Cylinder, Retract*	HSC - Wipe, Retract*
Third	Bank B Lift Cylinder, Retract*	HSC - Lift, Retract*
Fourth	Bank B Wipe Cylinder, Retract*	HSC - Wipe, Retract*
Fifth - continue with Bank C* and so on		

* Refer to Figure 13 for connection locations.

1. Install Field Connect Hose Fittings onto the first hose. **Refer to DC000601-019**.

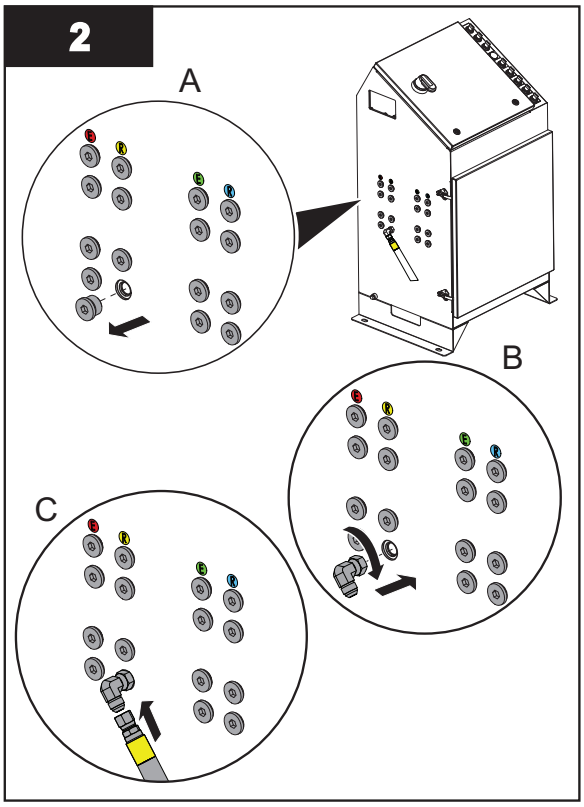

Note: *Pay attention to the orientation of the elbow so that the hoses are not interfering with each other during installation.*

3. Repeat steps 1 and 2 for remaining hydraulic hoses until complete.

7.11.2 Bleed the Hydraulic Hoses

NOTICE

The hydraulic system will require constant filling during the recharging of the hose or the reservoir will become too low and damage to the pump may occur.

To avoid aerated fluid from entering the pump, make sure that the fluid in the reservoir does not go below the halfway point throughout the procedure.

Ensure hydraulic oil does not contain entrained air.

All UV banks connected to the HSC will require unions at each UV bank before bleeding wiper and lift hoses of air.

Always use a towel when disconnecting hydraulic hoses from connections. Clean up spills.

Always hold hydraulic hose connections up high, so as to prevent fluid from draining out of open hose connections.

Prerequisites:

- Complete Hydraulic Hose Fittings and Connections. Refer to Section 7.11.1.
- Temporarily install 2 Lamp Sleeves per Wiper Plate Assembly. Refer to Section 9.4.1.
- Make sure UV Bank is in the full down position.

- Make sure the hydraulic cylinders are in the fully retracted position before bleeding the hydraulic lines. Refer to Figure 14.

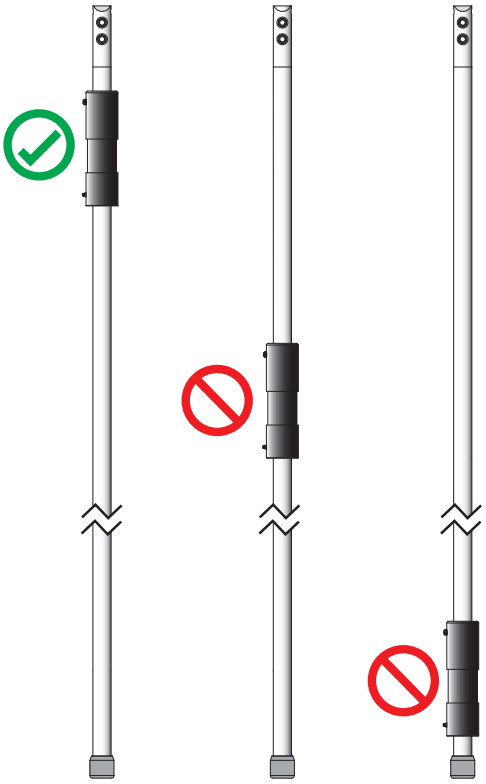

Figure 14 Hydraulic Cylinder position

Tools:

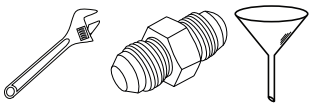

Materials:

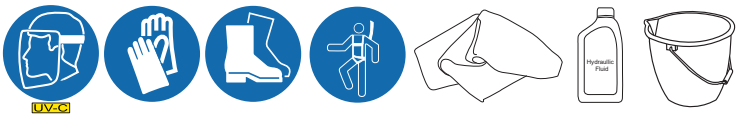

- Short hose (by others)

Procedure:

Bleed Lift Cylinder Circuits

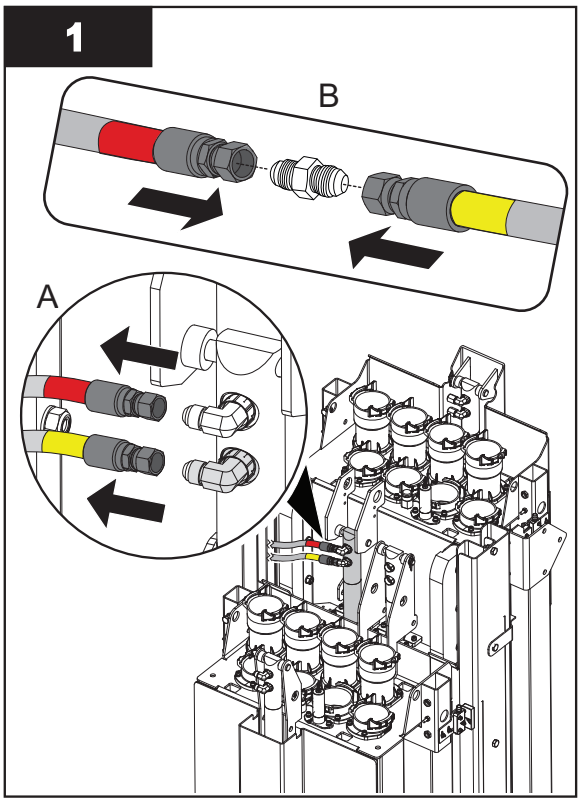

Note: *Disconnect the Lift Extend Hose (i.e. Red) and Lift Retract Hose (i.e. Yellow) from the Cylinder and connect together with the provided union to create a closed circuit.*

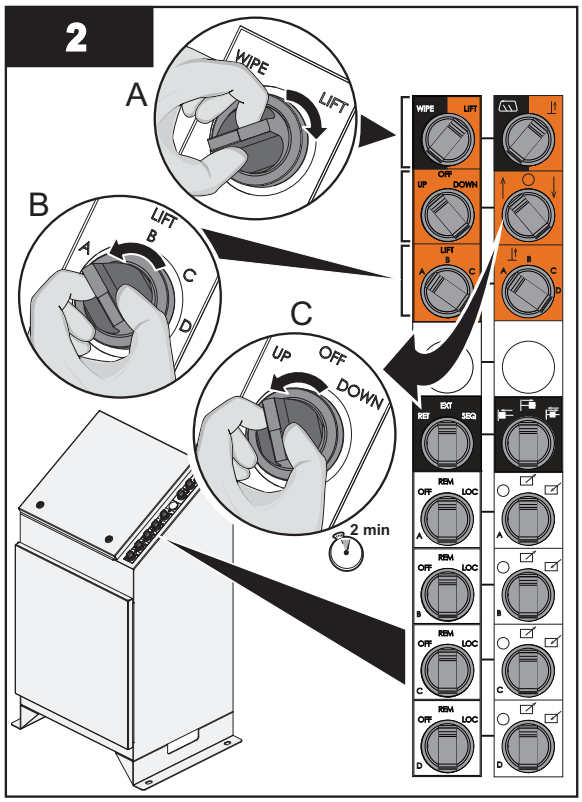

Notes: *1) Bank A is shown as an example only. Select the required UV Bank using the Lift UV Bank Selection Switch.*
2) Operate the hydraulic pump for 2 minutes or until a solid stream of fluid is coming back into the HSC reservoir.
3) Check hydraulic fluid levels, add fluid as required (Section 9.8.4).

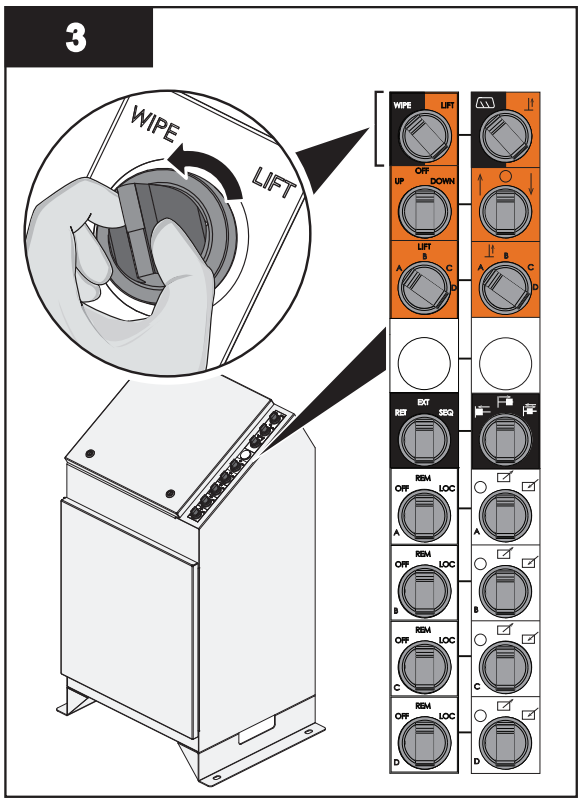

Notes: *1) When complete, turn the wipe/lift switch to the WIPE position.*
2) Depressurize the hydraulic circuit. Refer to Section 9.8.2.

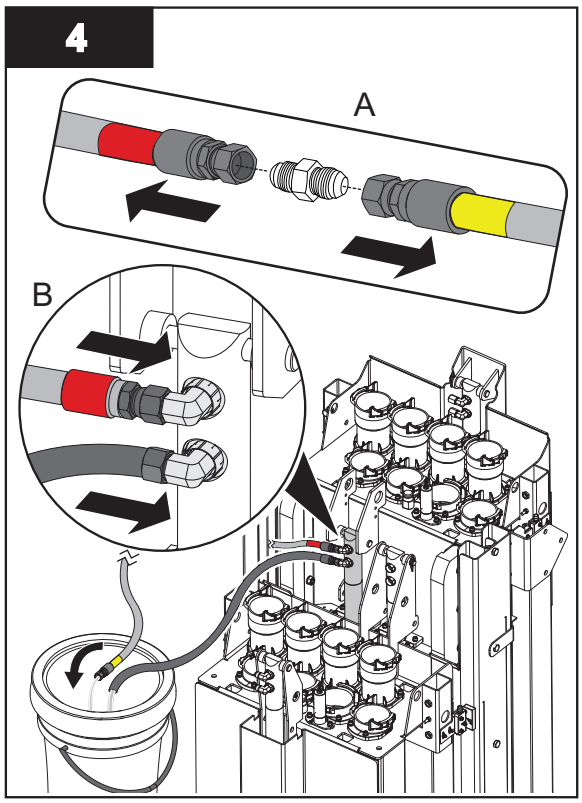

Notes: *1) Connect the Lift Extend Hose (i.e. Red) to the Lift Cylinder.*
2) Connect a short hose to the Lift Retract Fitting on the Lift Cylinder, route the opposite end to the bucket.
3) Route Lift Retract Hose (i.e. Yellow) to the bucket.

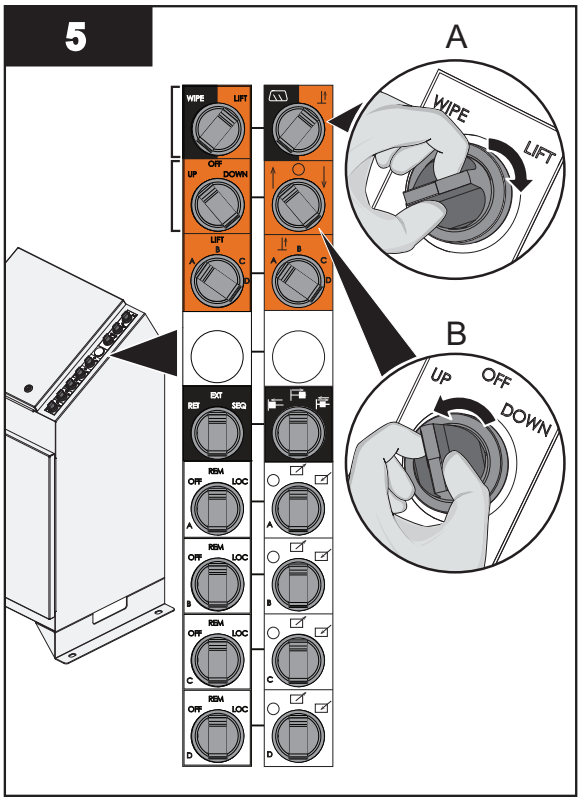

Note: *Lift the UV Bank up, install the bank locking plates. Refer to Section 8.1.2.*

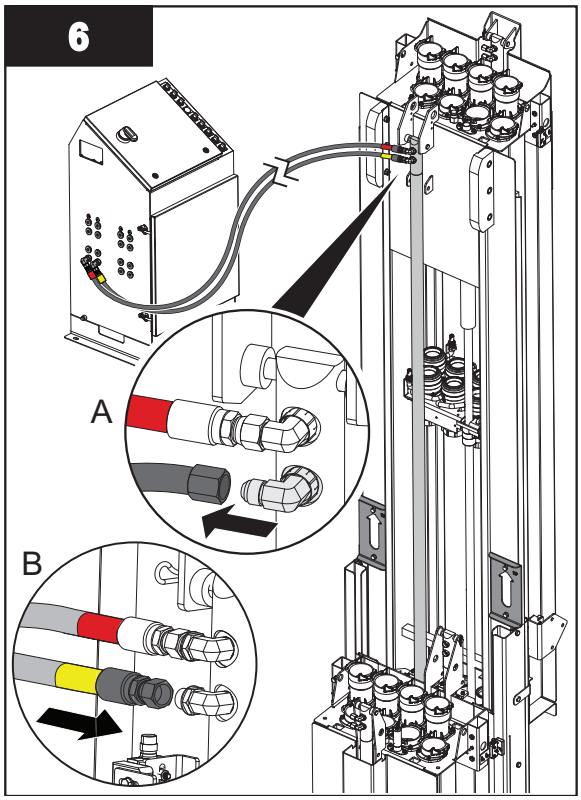

Note: *Connect the Lift Retract Hose (i.e. Yellow) to the Lift Cylinder.*

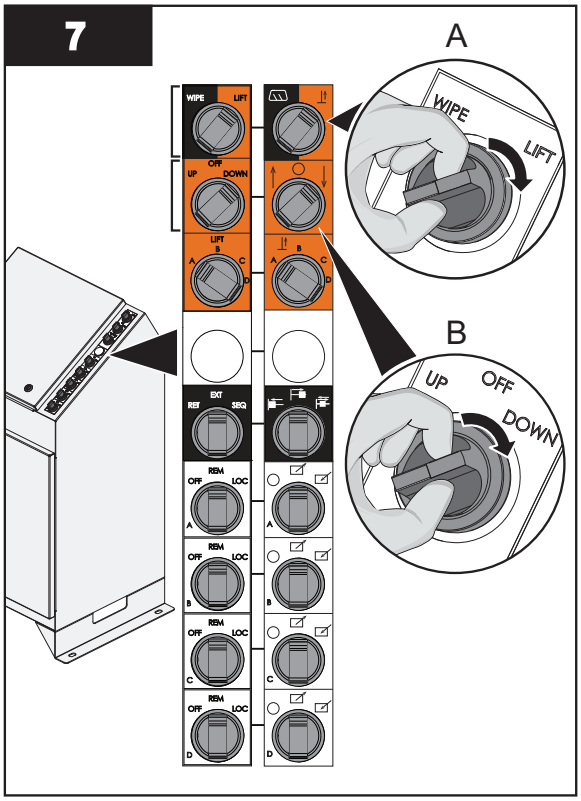

Note: *Lift the UV Bank down. Refer to Section 8.1.2.*

8. Repeat steps 1 - 7 for remaining Lift Circuits.

Bleed Wipe Cylinder Circuits

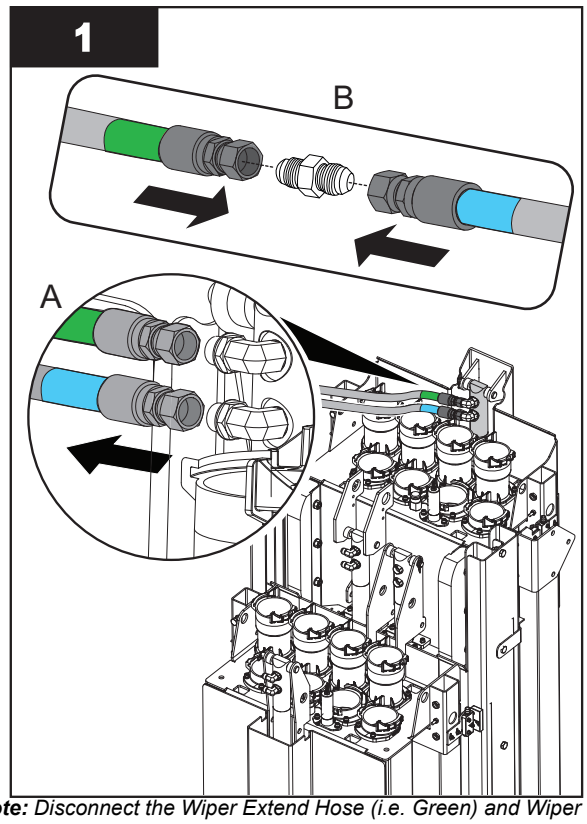

Note: *Disconnect the Wiper Extend Hose (i.e. Green) and Wiper Retract Hose (i.e. Blue) from the Cylinder and connect together with the provided union to create a closed circuit.*

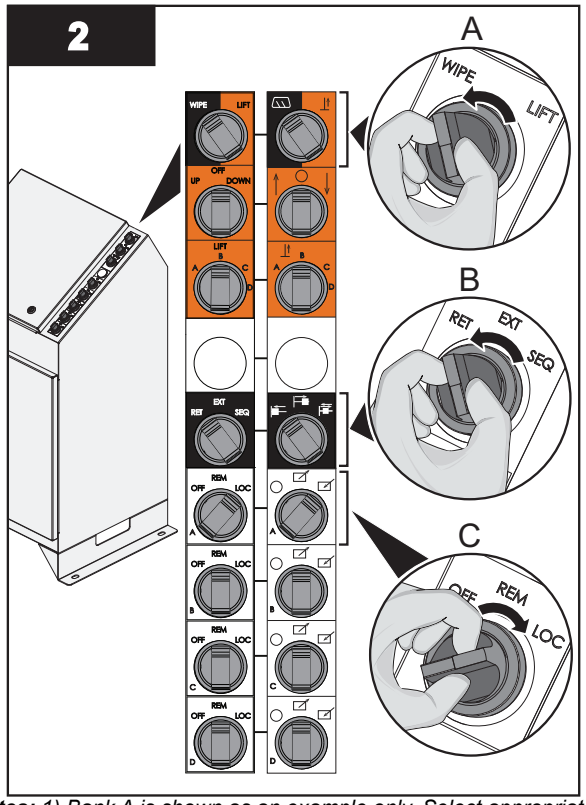

Notes: *1) Bank A is shown as an example only. Select appropriate UV Bank Wiper Mode Switch.*
2) Operate the hydraulic pump for 2 minutes or until a solid stream of fluid is coming back into the HSC reservoir.
3) Check hydraulic fluid levels, add fluid as required (Section 9.8.4).

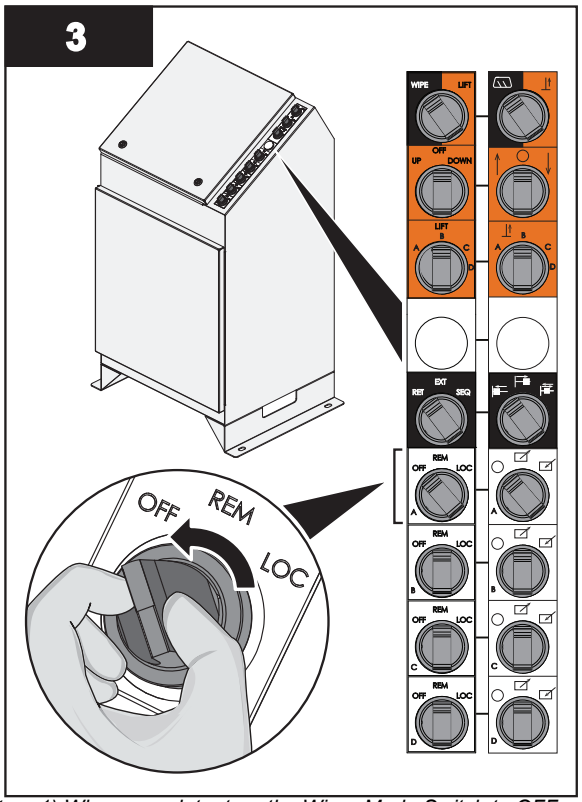

Notes: *1) When complete, turn the Wiper Mode Switch to OFF position.*
2) Depressurize the hydraulic circuit. Refer to Section 9.8.2.

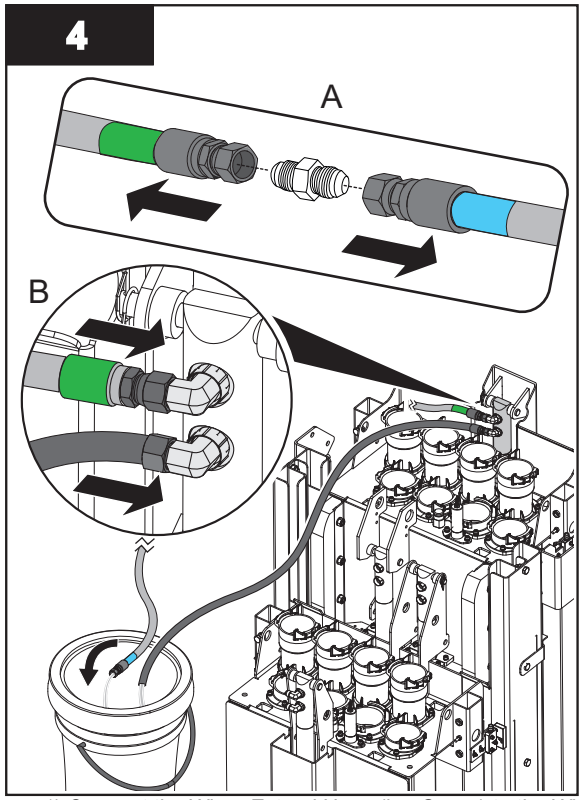

Notes: *1) Connect the Wiper Extend Hose (i.e. Green) to the Wipe Cylinder.*
2) Connect a short hose to the Wiper Retract Fitting on the Wipe Cylinder, route the opposite end to the bucket.
3) Route Wiper Retract Hose (i.e. Blue) to the bucket.

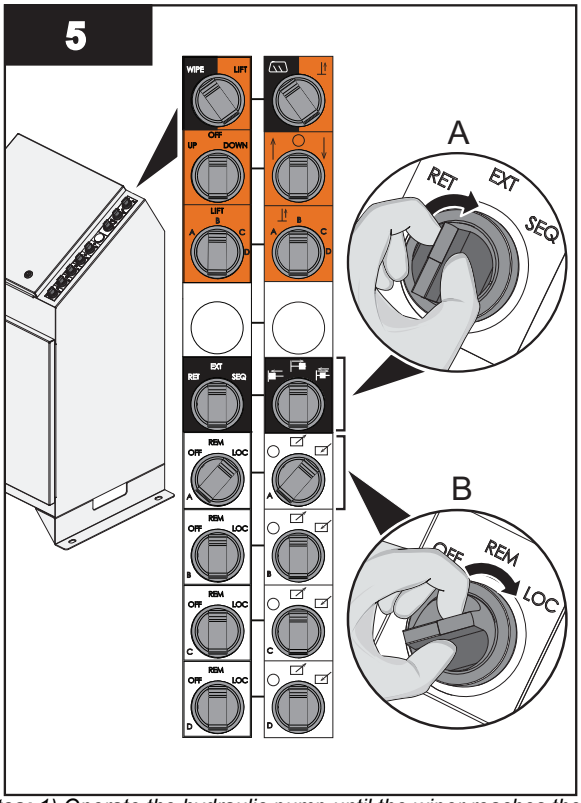

Notes: *1) Operate the hydraulic pump until the wiper reaches the bottom.*
2) Check hydraulic fluid levels, add fluid as required (Section 9.8.4).

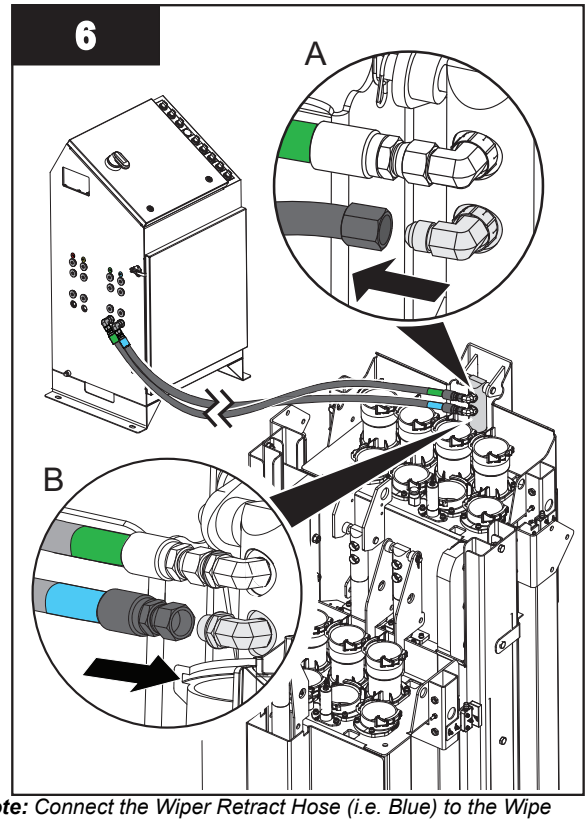

Note: *Connect the Wiper Retract Hose (i.e. Blue) to the Wipe Cylinder.*

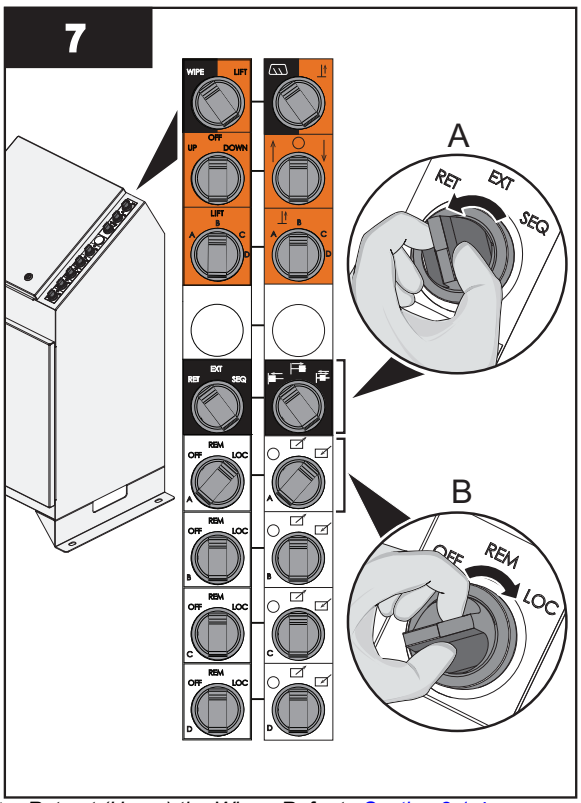

Note: *Retract (Home) the Wiper. Refer to Section 8.1.4.*

8. Repeat steps 1 - 7 for remaining Wipe Circuits.

Post-Requisites:

- Inspect the hydraulic hose and fittings for leaks. If a leak is seen at a hydraulic fitting, tighten the hydraulic fitting.

- Remove the Lamp Sleeves (Section 9.4.1) when done.

7.12 Lift Cylinder

7.12.1 Secure the Lift Cylinder

Prerequisites:

- Bleed the Hydraulic Hoses. Refer to Section 7.11.2.

Tools:

- Hoist Ring (x2)

Materials:

Procedure:

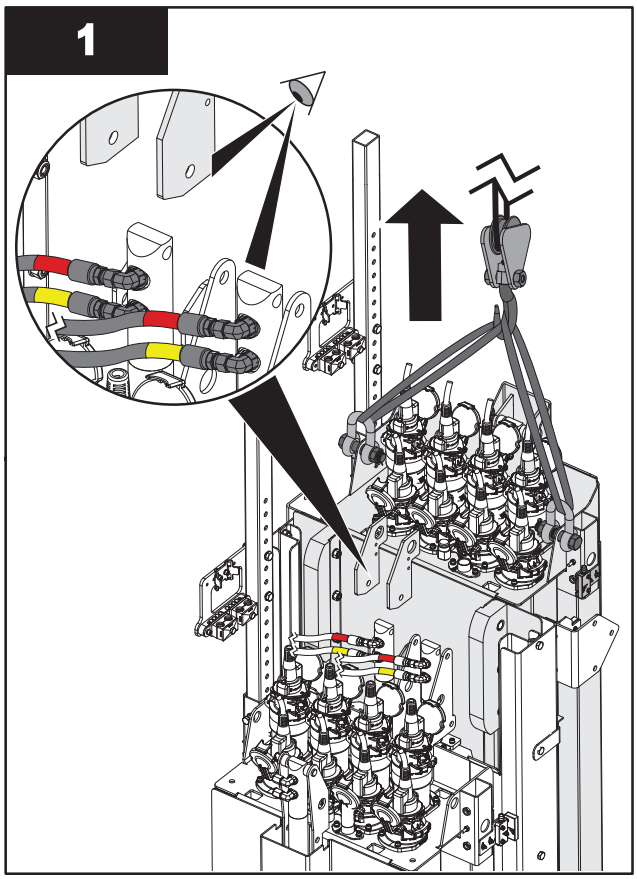

Note: *Raise the UV Bank to gain access to the clevis pin bracket.*

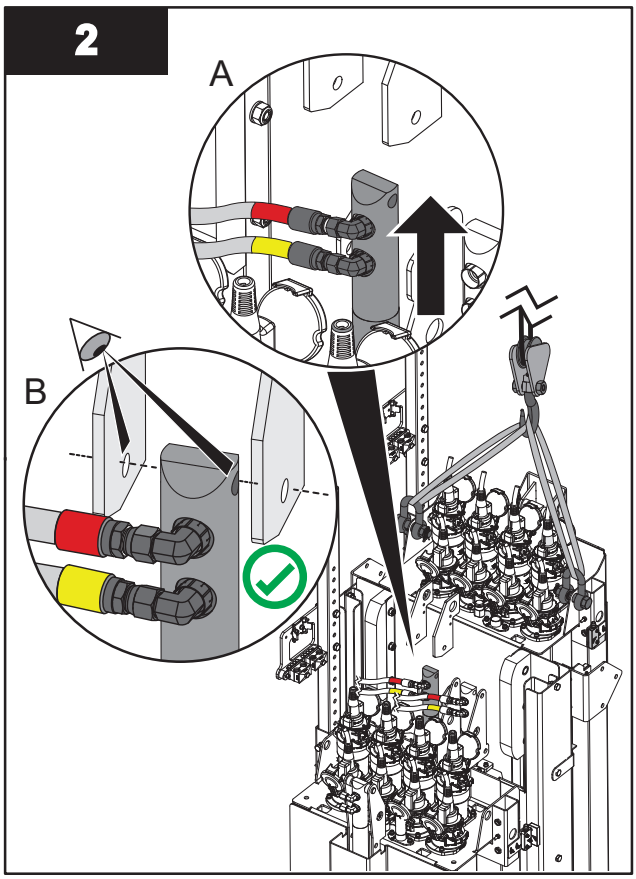

Note: *Extend hydraulic cylinder to align the mounting hole on the cylinder with clevis pin brackets as shown (Section 8.1.2).*

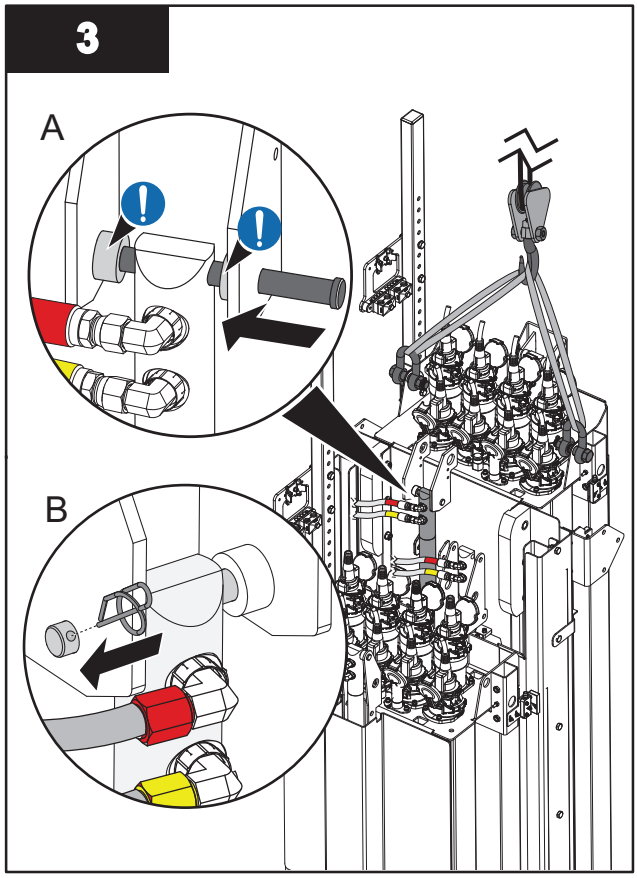

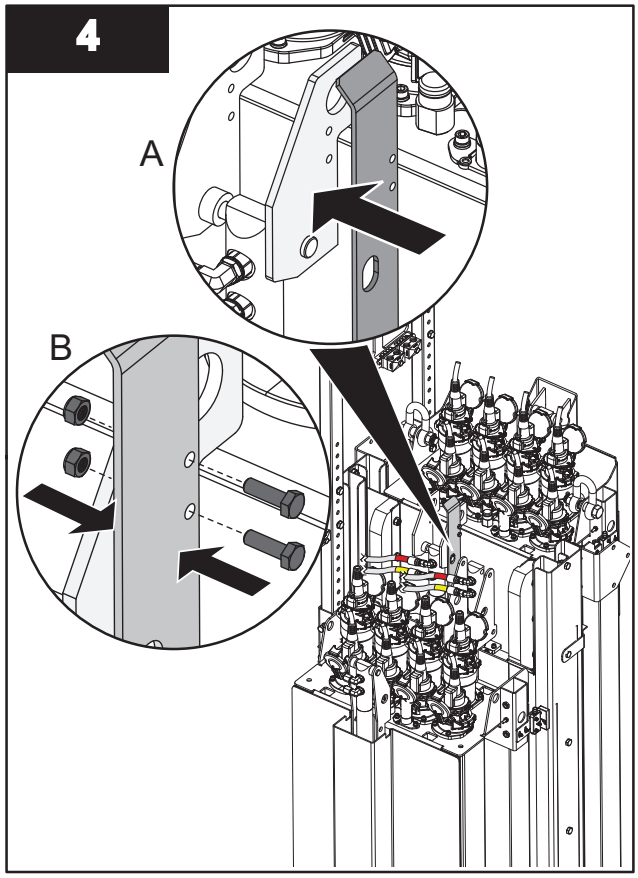

Note: *Lift the UV Bank down (Section 8.1.2).*

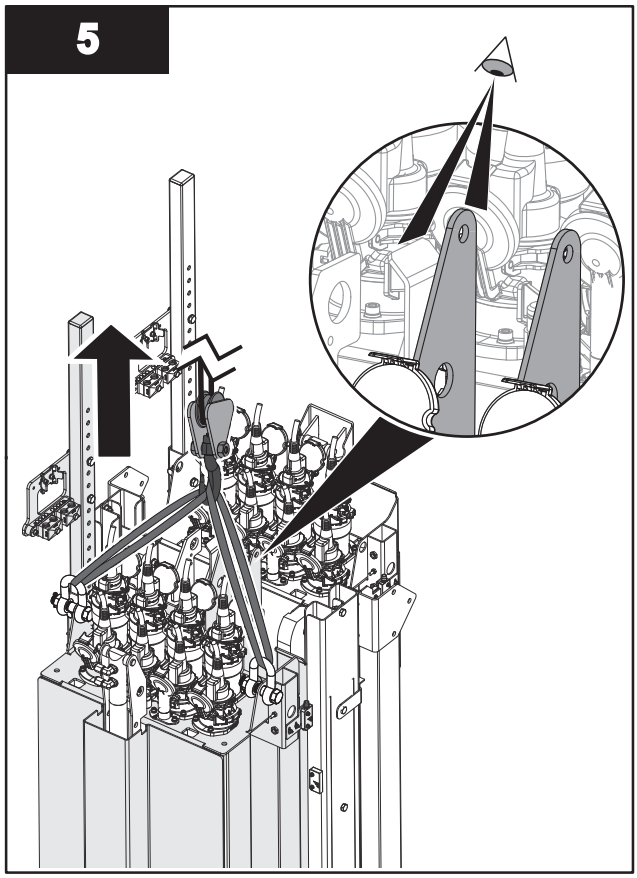

Note: *Raise the UV Bank to gain access to the clevis pin bracket.*

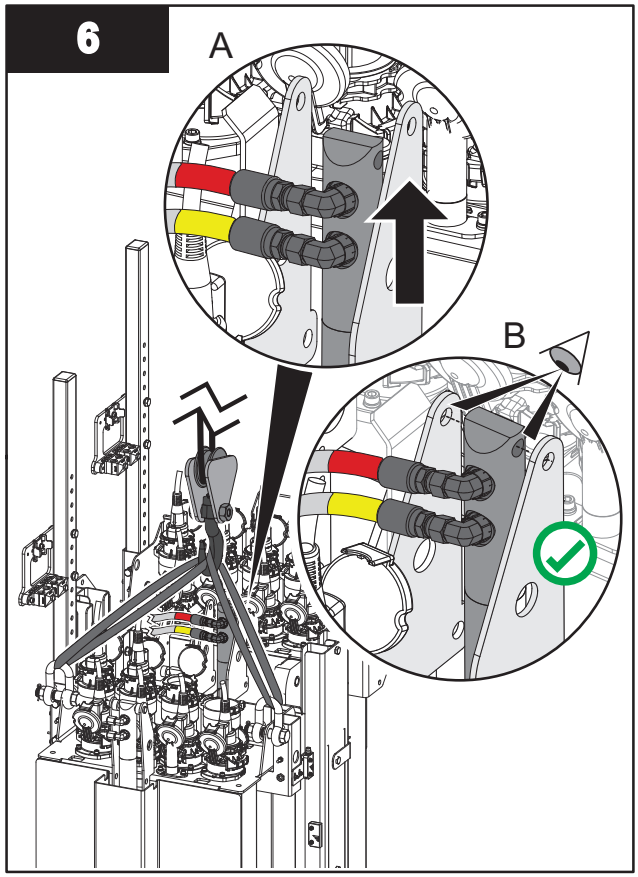

Note: *Extend hydraulic cylinder to align the mounting hole on the cylinder with clevis pin brackets as shown (Section 8.1.2).*

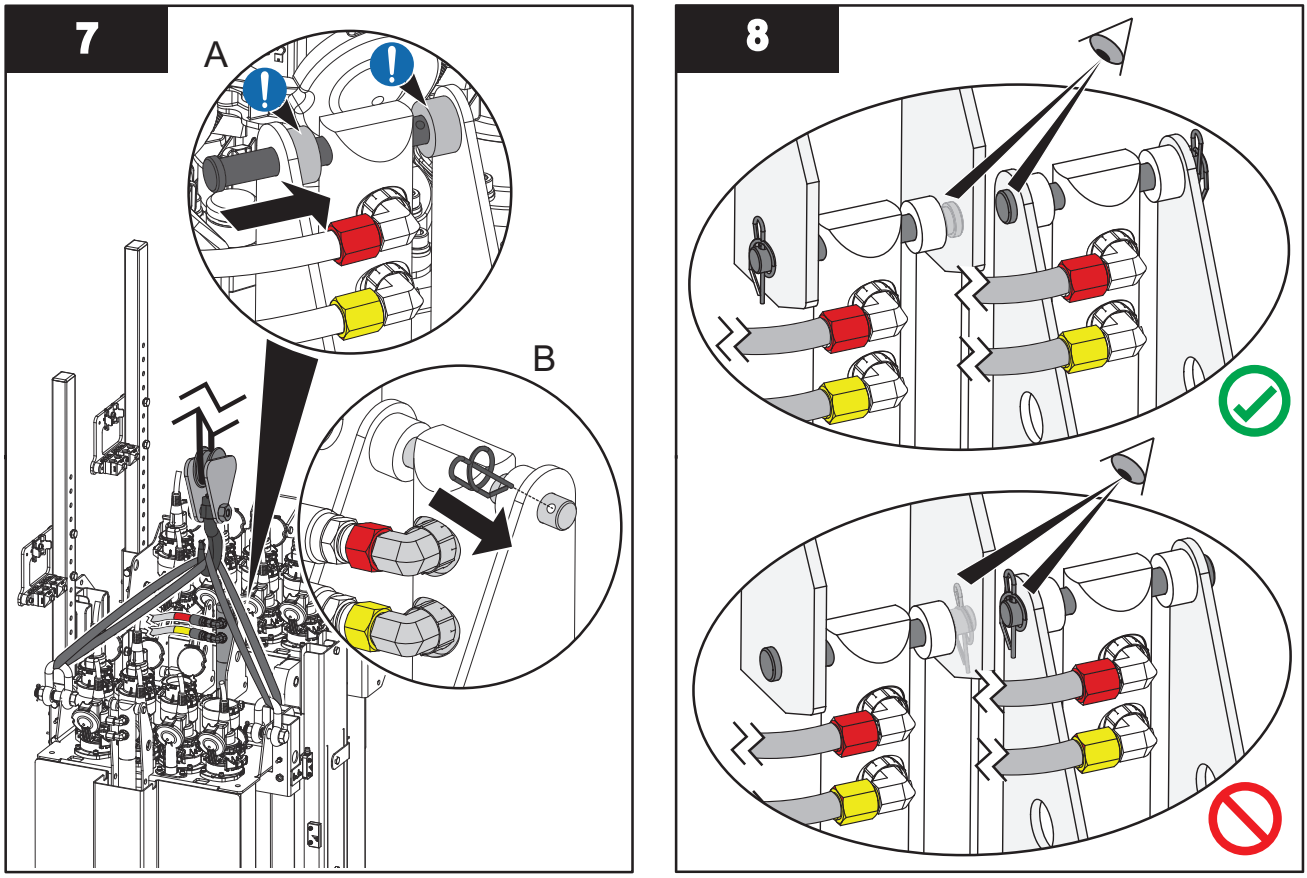

Note: *Lift the UV Bank down (Section 8.1.2).*

7.13 UV Bank Support Assembly

Prerequisites:

- Connect the Hydraulic Lines. Refer to Section 7.9.1.

Tools:

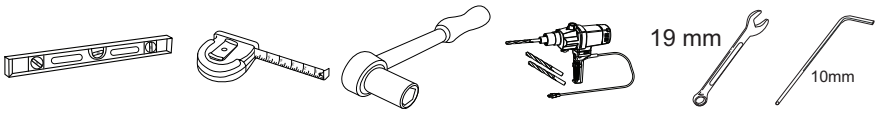

Materials:

- Anchors (by others)

Procedure:

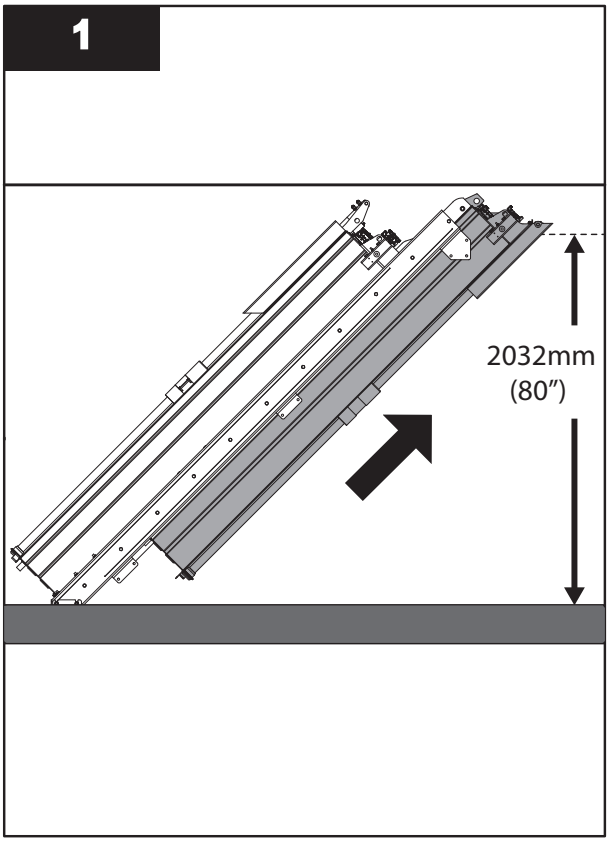

Note: *Measure from base of Channel Frame.*

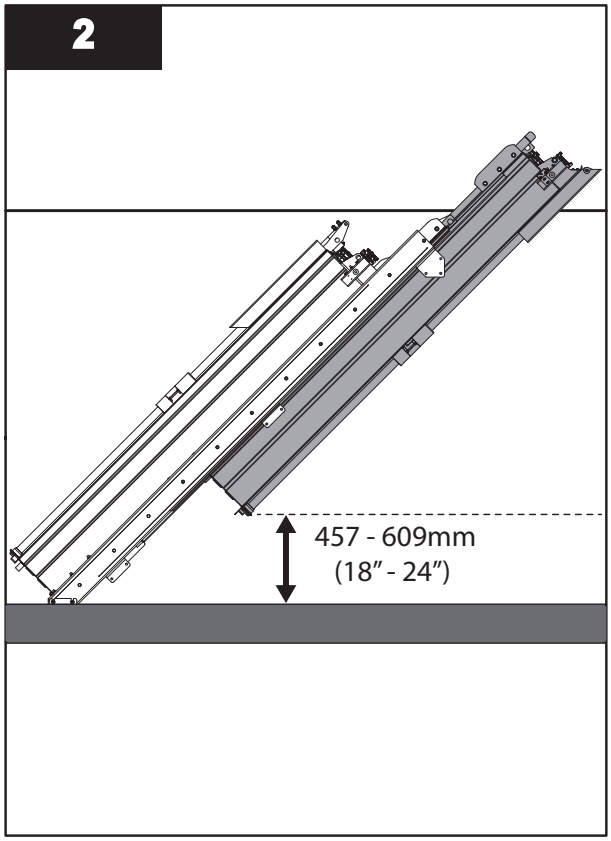

Notes: *1) Lift the UV Bank. Refer to Section 8.1.2.*
2) DO NOT place anything under the lifted UV Bank.

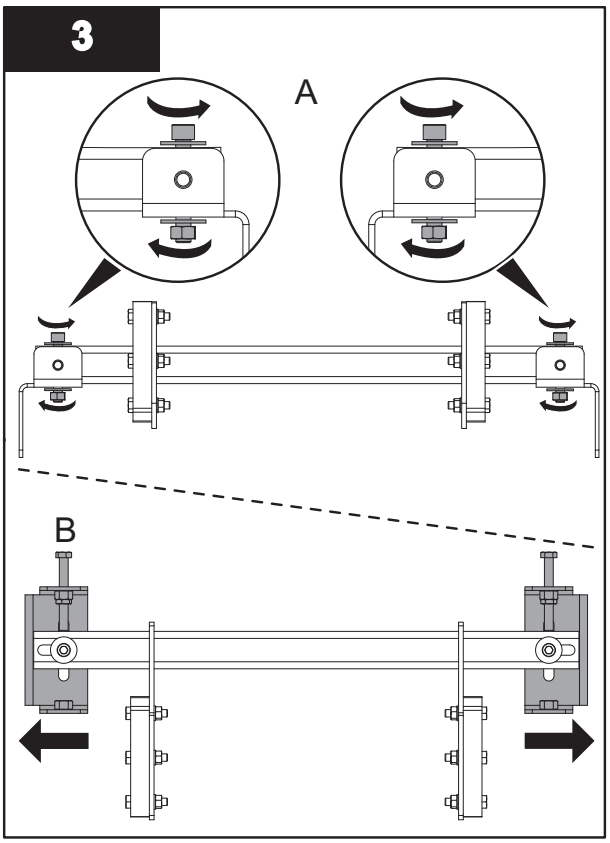

Note: *Adjust the width of the support beam mounting brackets to match the width of the UV Channel.*

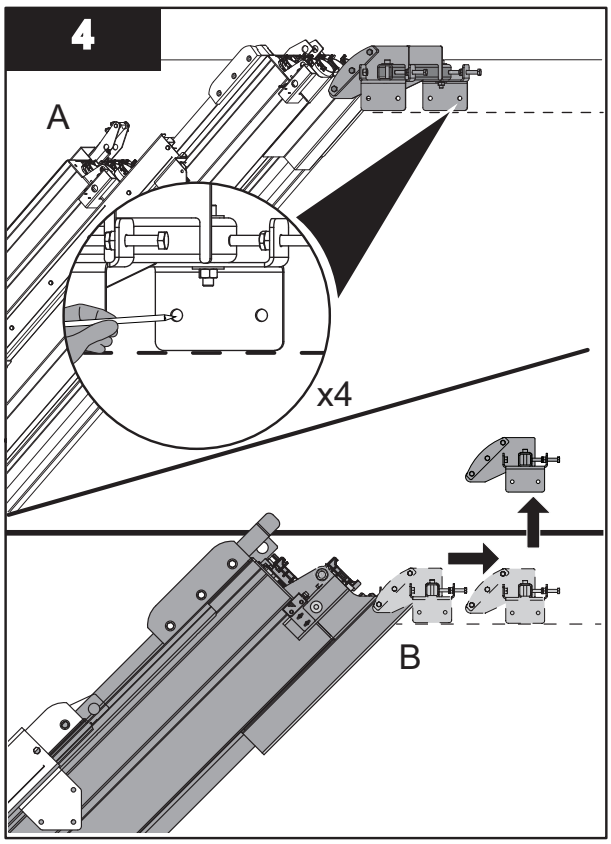

Note: *Push the Support Assembly flush to the lifted UV Bank. Make sure the bottom of the brackets are aligned with the marked line in step 1.*

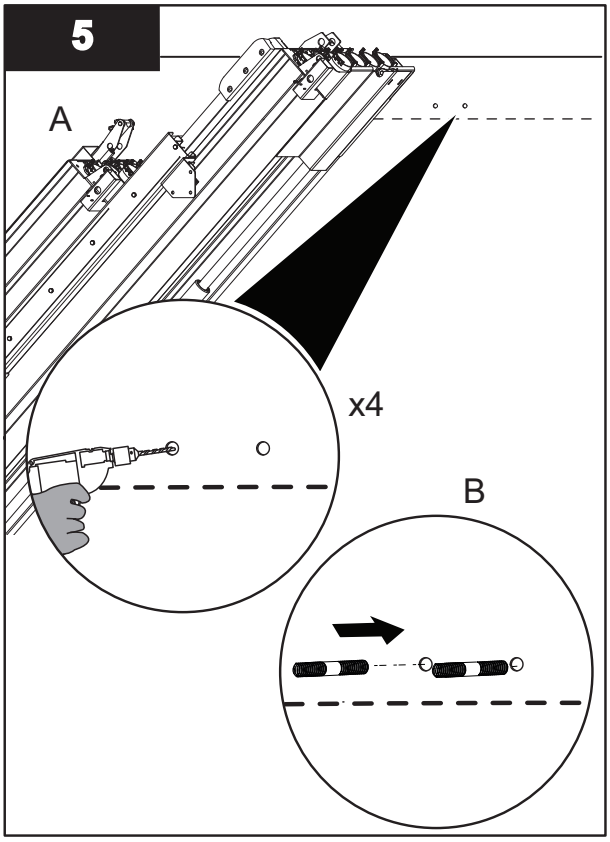

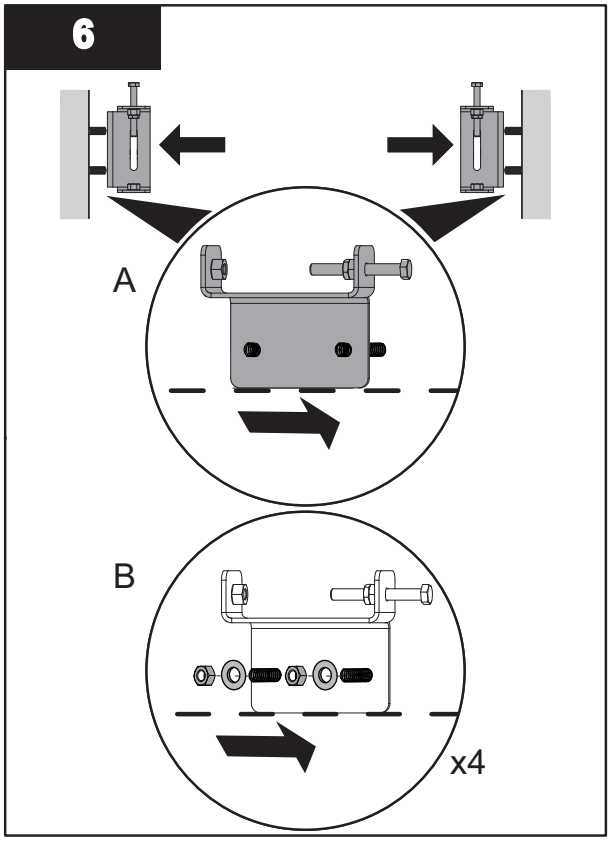

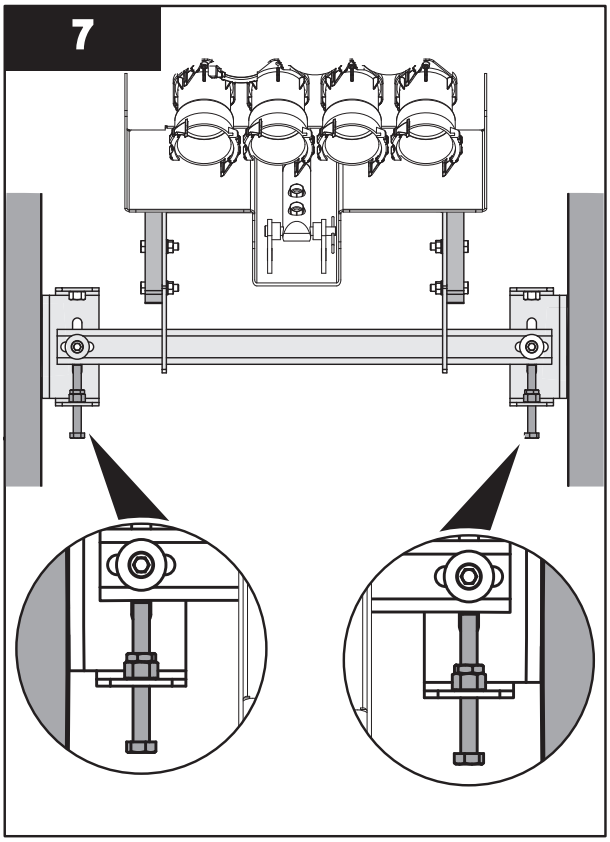

Note: *Adjust the tension hardware until the wear pads align with the UV Bank.*

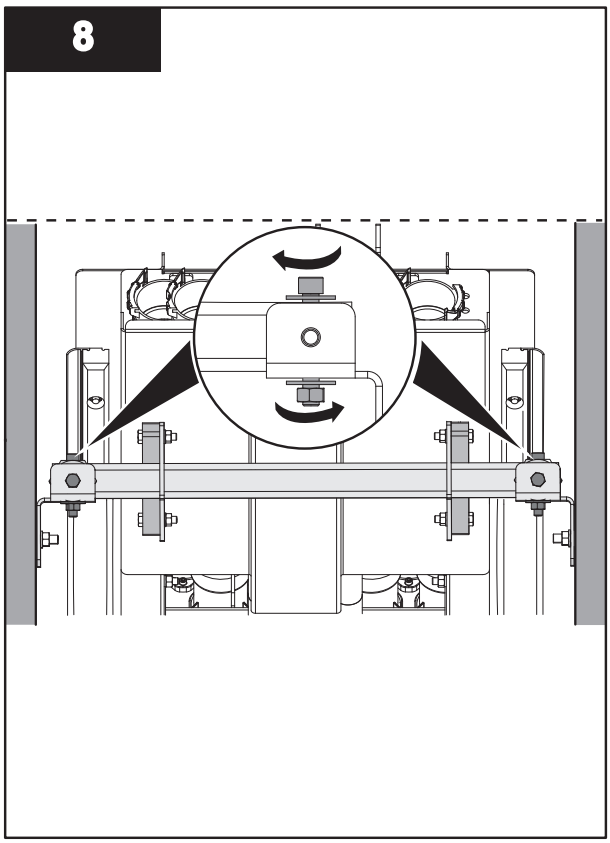

Note: *Tighten all UV Bank Support Assembly hardware.*

7.14 Cable Trough Cable Management - Spiral Wrap

Prerequisites:

- Install Cable Management Assemblies. Refer to Section 7.10.1.
- Install Hydraulic Hoses. Refer to Section 7.9.
- Install the Lamp Cables. Refer to Section 7.10.

Tools:

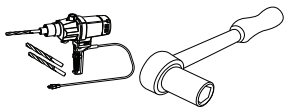

Materials:

- Cable Ties (By others)

Procedure:

- For Standard Channel Bracket Assemblies – refer to Figure 15 and Figure 17.
- For Deep Channel Bracket Assemblies – refer to Figure 16 and Figure 17.

With a Standard Channel Bracket Assembly:

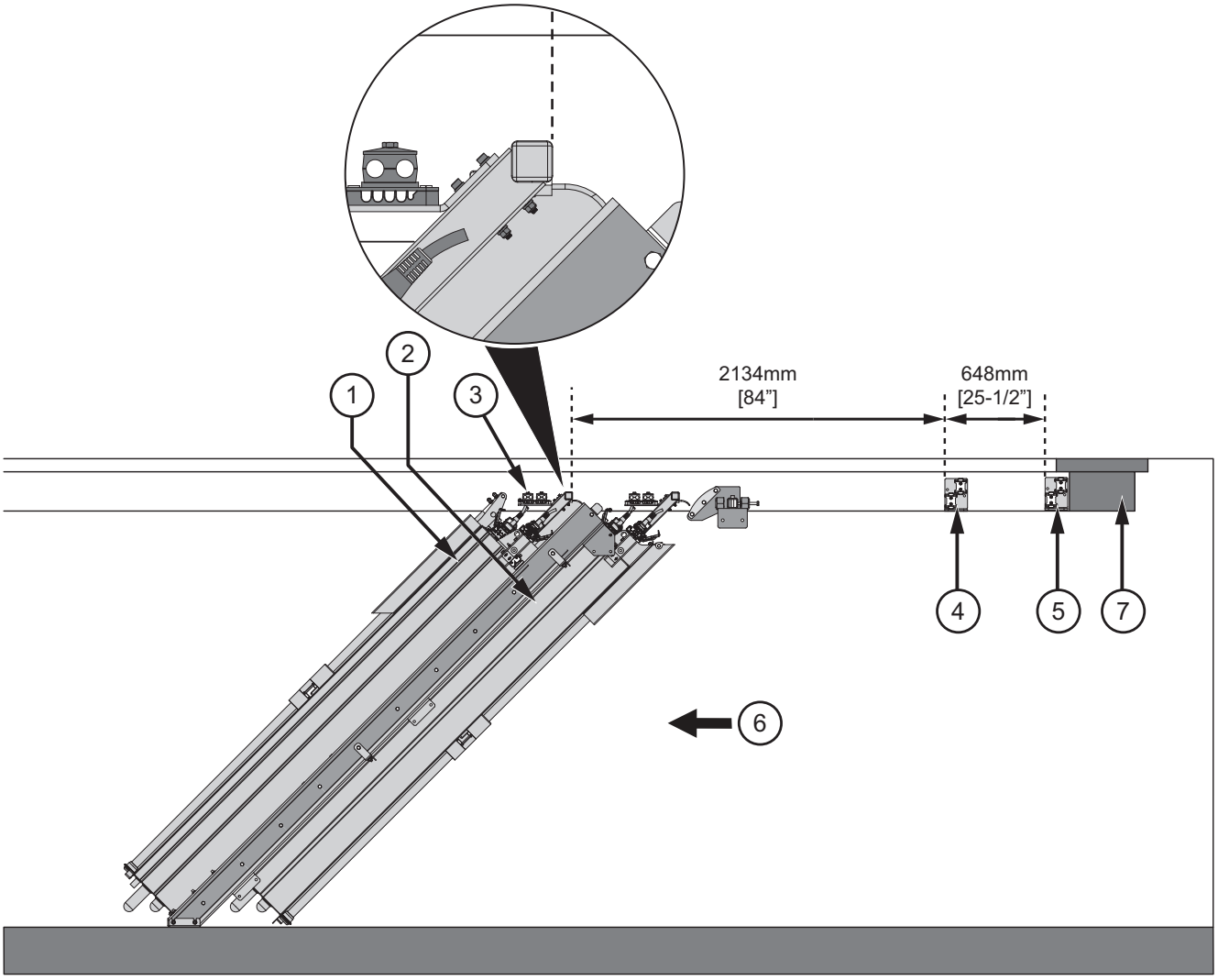

Figure 15 Section View

1	UV Bank B	**5**	UV Bank A - Trough Bracket
2	UV Bank A	**6**	Flow Direction
3	Cable Management Assembly	**7**	Cable Trough
4	UV Bank B - Trough Bracket		

With a Deep Channel Bracket Assembly:

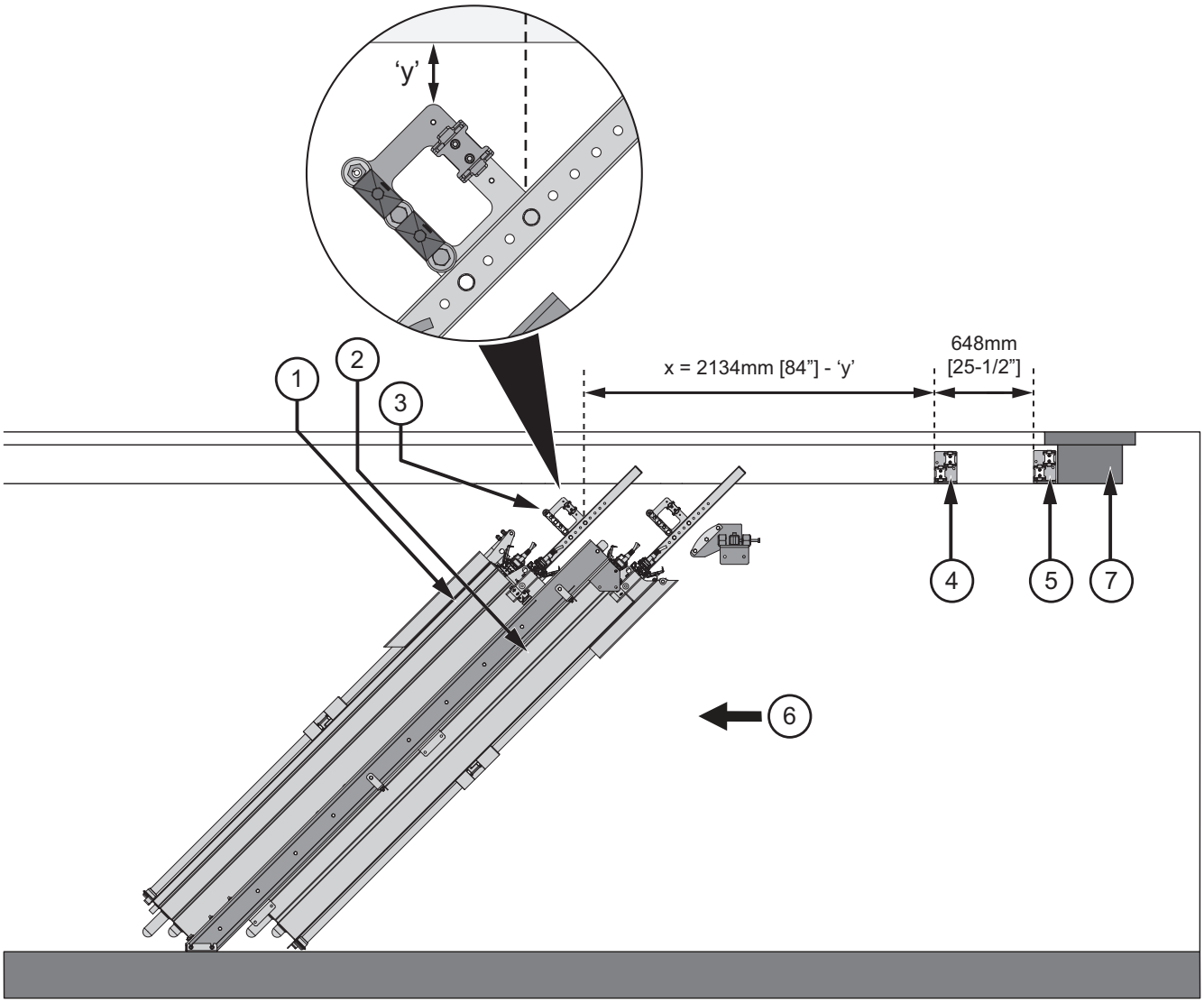

Figure 16 Section View

1	UV Bank B	**5**	UV Bank A - Trough Bracket
2	UV Bank A	**6**	Flow Direction
3	Cable Management Assembly	**7**	Cable Trough
4	UV Bank B - Trough Bracket		

With Standard OR Deep Channel Bracket Assembly:

Note: *Ensure that there is an offset between UV Bank B and UV Bank A brackets (Figure 17) to allow for the cable bundle to pass freely behind UV Bank A Bracket Assembly.*

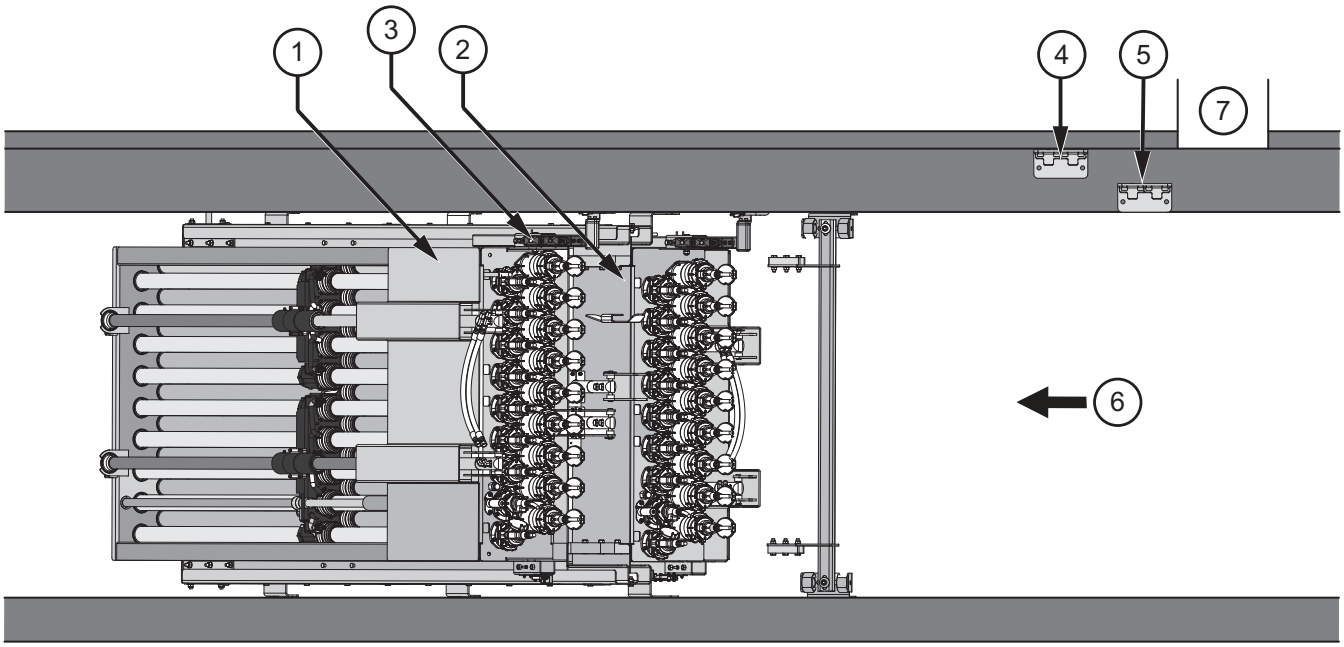

Figure 17 Plan View

1	UV Bank B	**5**	UV Bank A - Trough Bracket
2	UV Bank A	**6**	Flow Direction
3	Cable Management Assembly	**7**	Cable Trough
4	UV Bank B - Trough Bracket		

Note: *Lamp Cables, Ground Wire, Bank In Place Cable, and Hydraulic Hoses are not shown in some illustrations for clarity.*

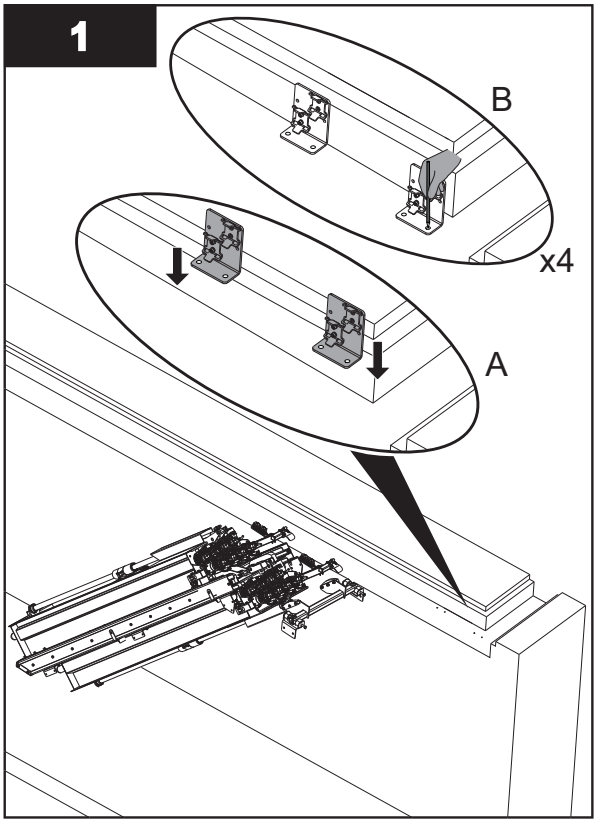

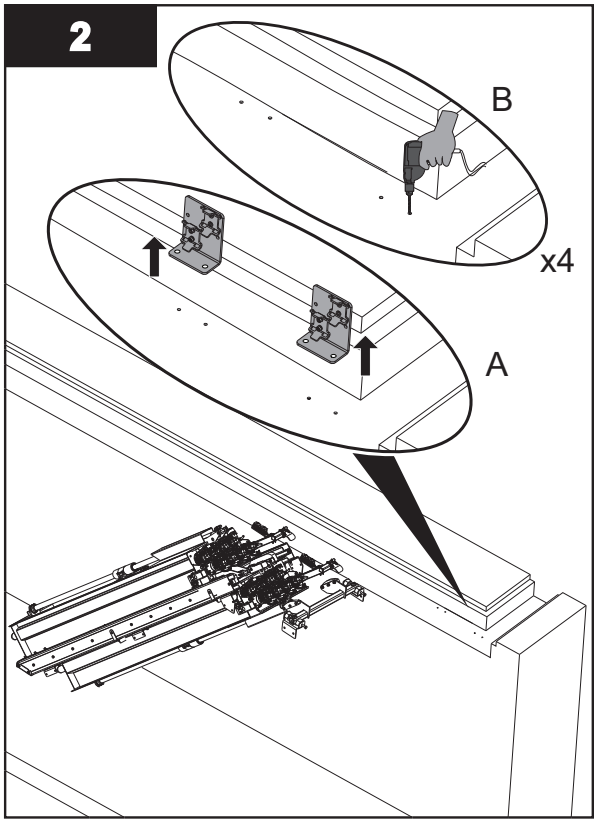

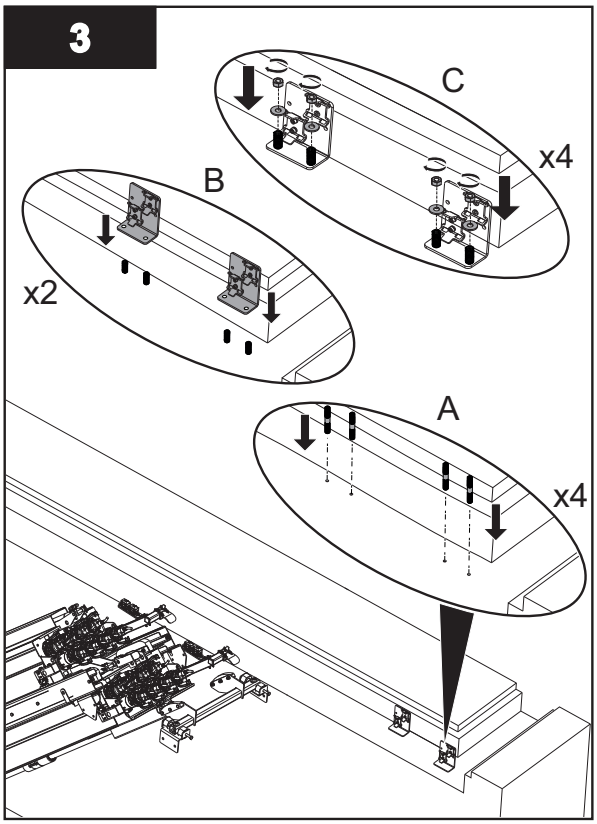

Standard Cable Management Arm

Deep Channel Cable Management Arm

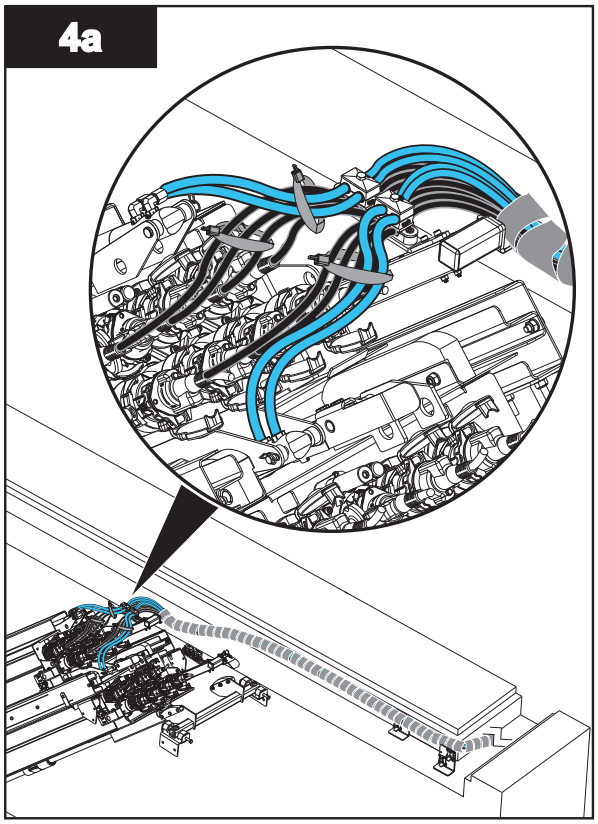

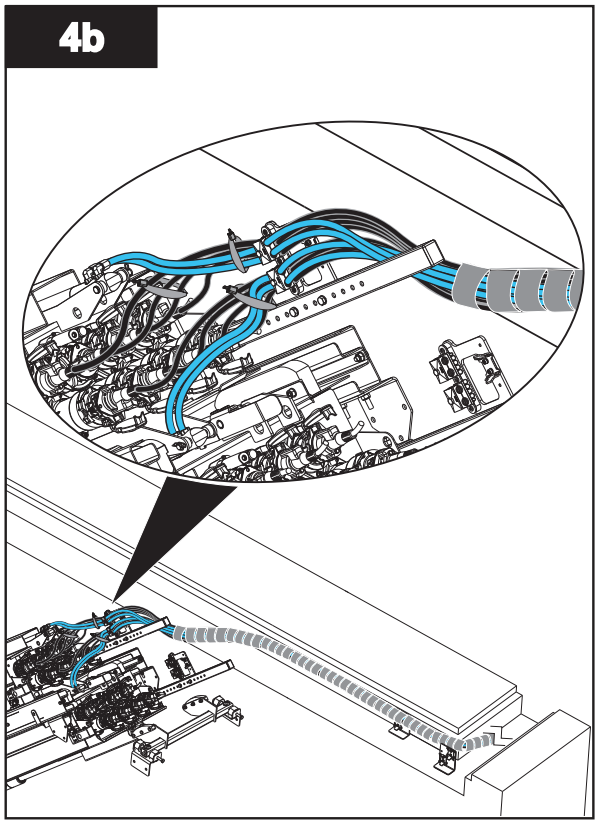

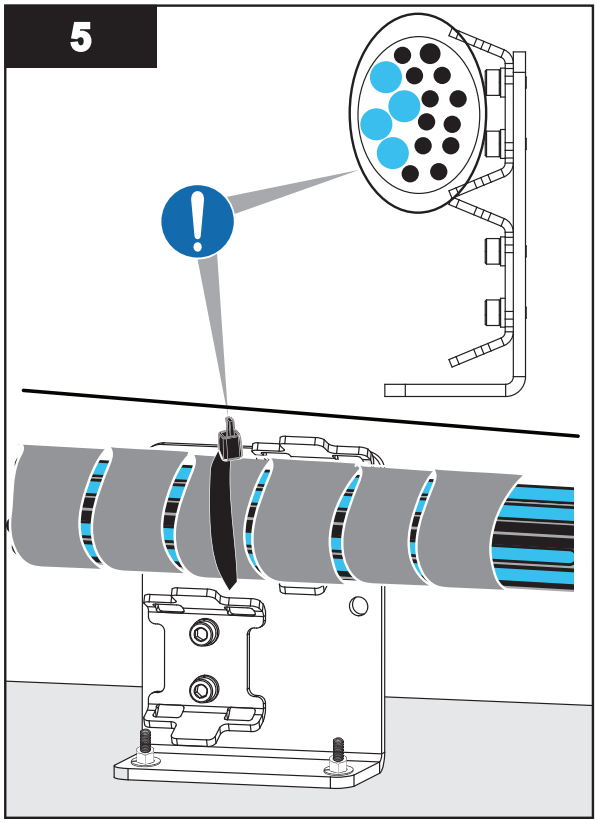

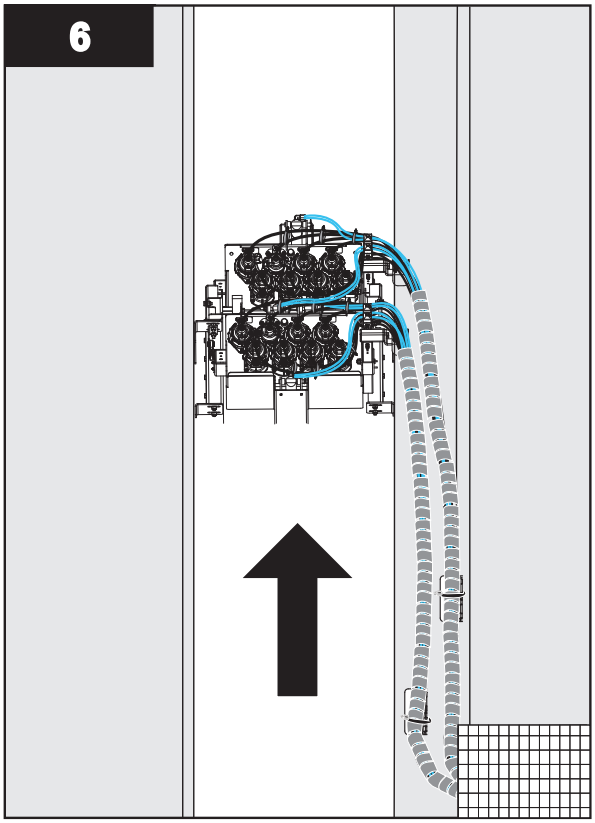

Notes: *1) Repeat steps for remaining cable bundles.*
2) Install Cable Tie as shown to tie down the cable and hose bundle to the bracket.

7.15 Cable Trough Cable Management - Cable Track

The Cable Track can be installed on one side of the UV Channel or both sides of the UV Channel. Refer to project layout drawing for Cable Track installation location.

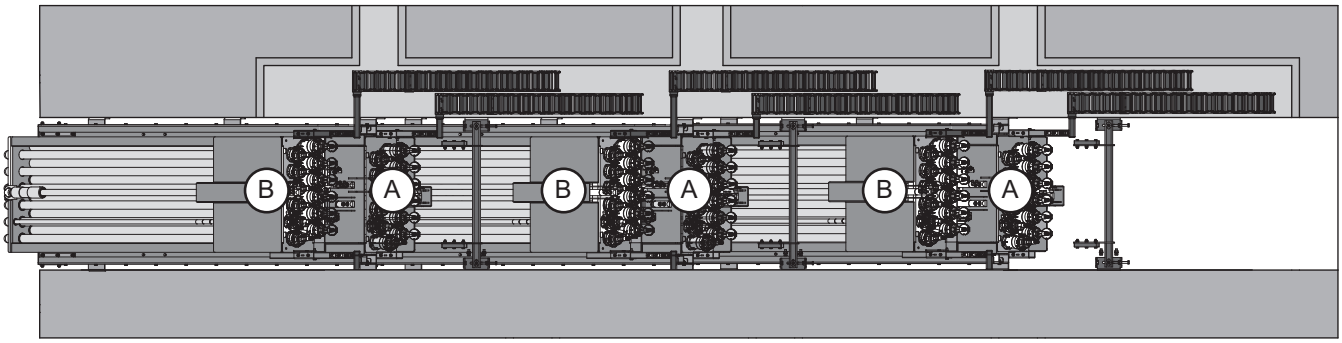

Figure 18 Cable Track Installation on One Side of UV Channel

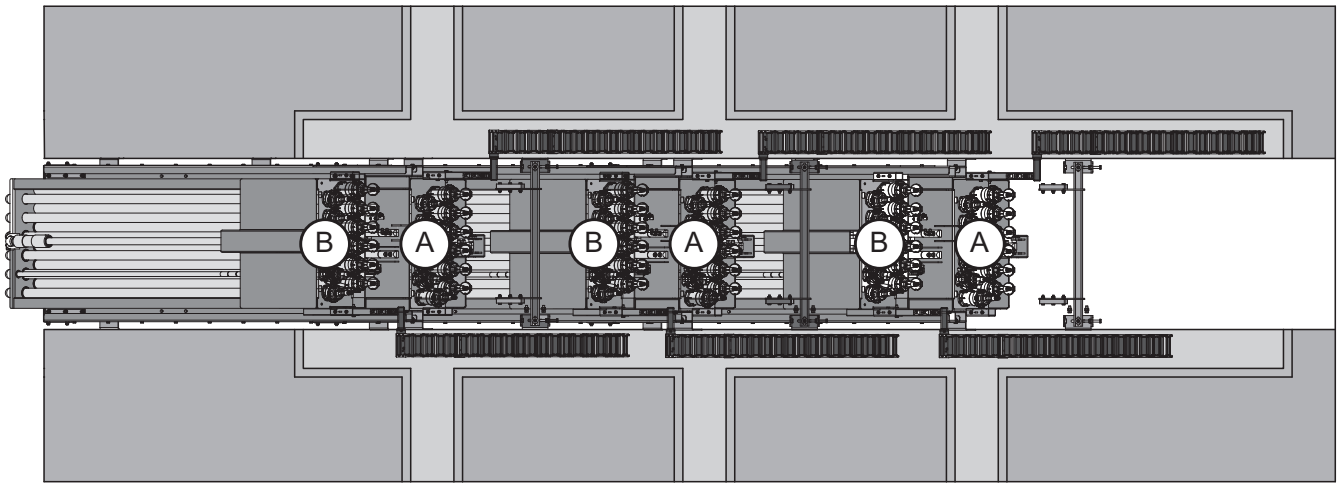

Figure 19 Method A Cable Track Installation on Both Sides of UV Channel

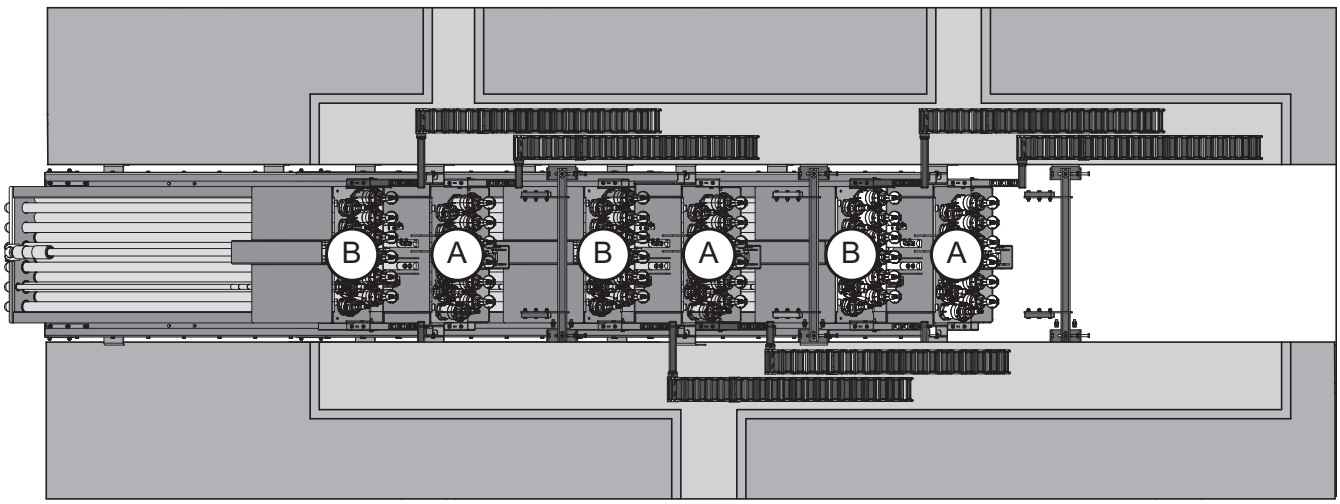

Figure 20 Method B Cable Track Installation on Both Sides of UV Channel

Prerequisites:

- Install Cable Management Assemblies. Refer to Section 7.10.1.
- Install Lamp Cables and Hydraulic Hoses in Bracket Assemblies. Refer to Section 7.10.2.

Tools:

Materials:

- Cable Track
- Cable Track Mounting Brackets
- Mounting Hardware

Procedure:

Install:

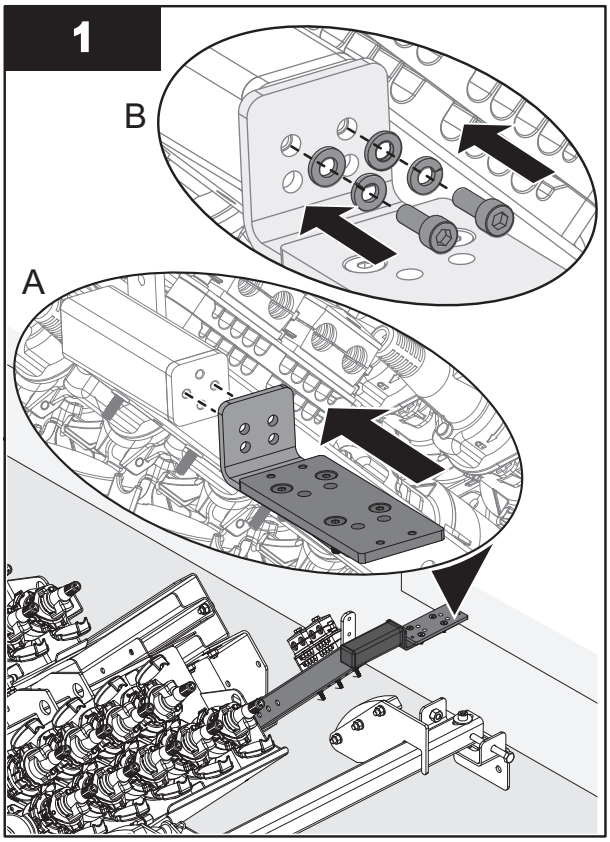

Note: *Install Cable Track mounting bracket to the cable management assembly.*

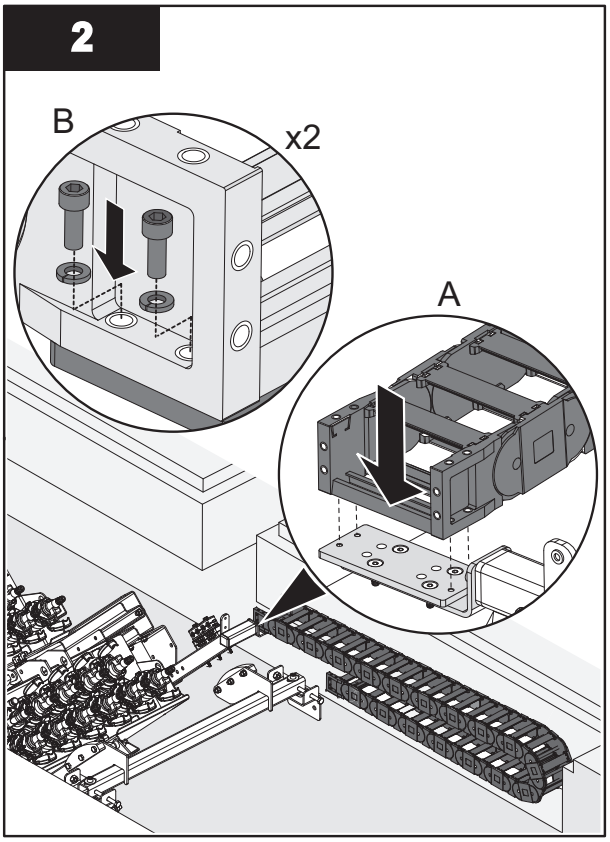

Note: *Position the cable track in the cable trough as per the project layout drawings.*

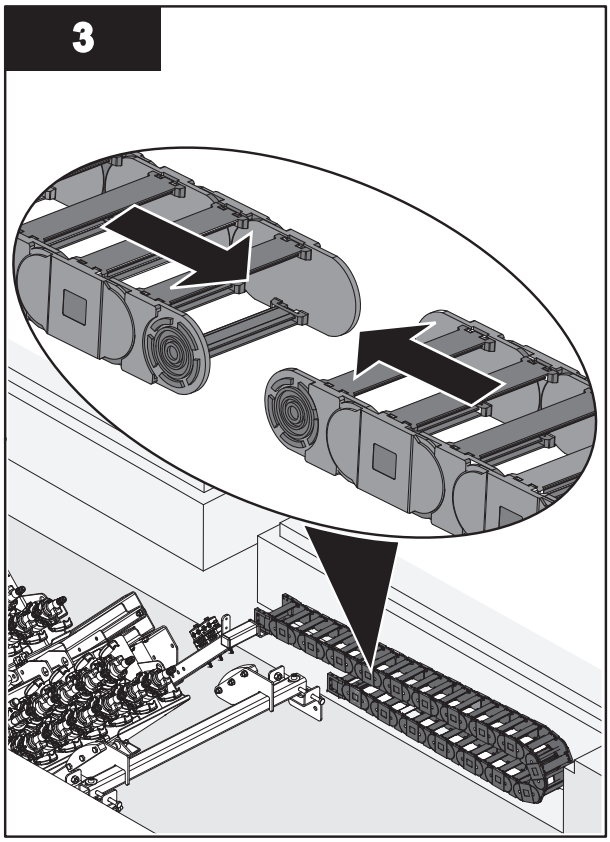

Note: *Position the chain links as shown.*

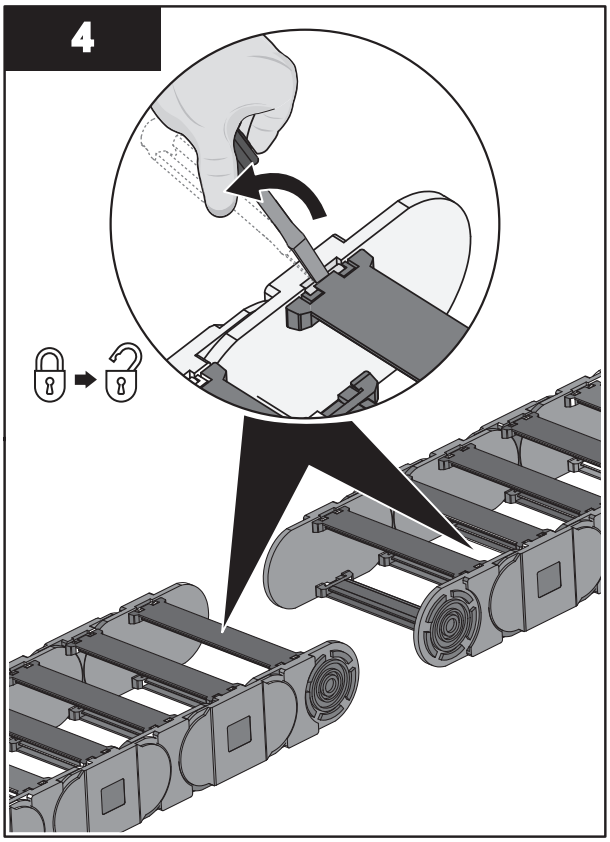

Note: *Pry open the cross bars using a screwdriver as shown.*

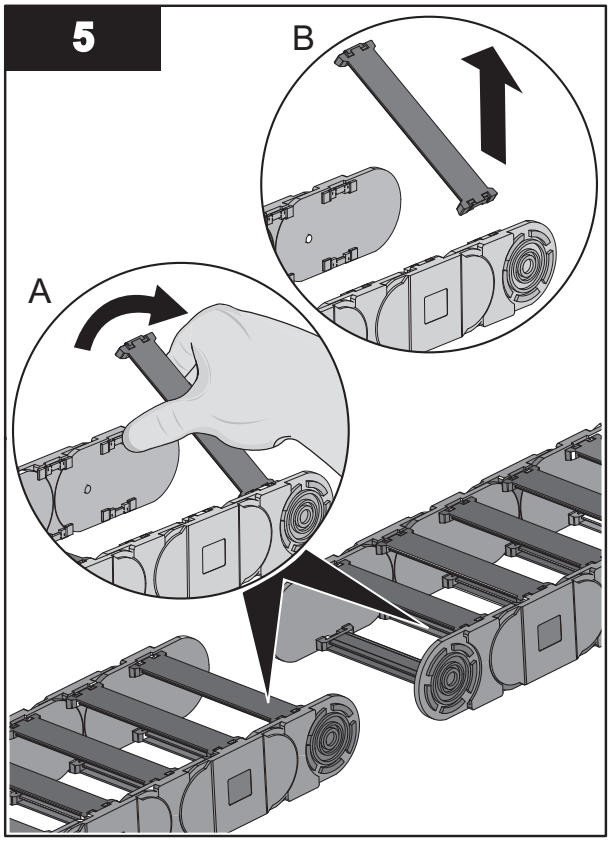

Note: *Retain the cross bars for later use.*

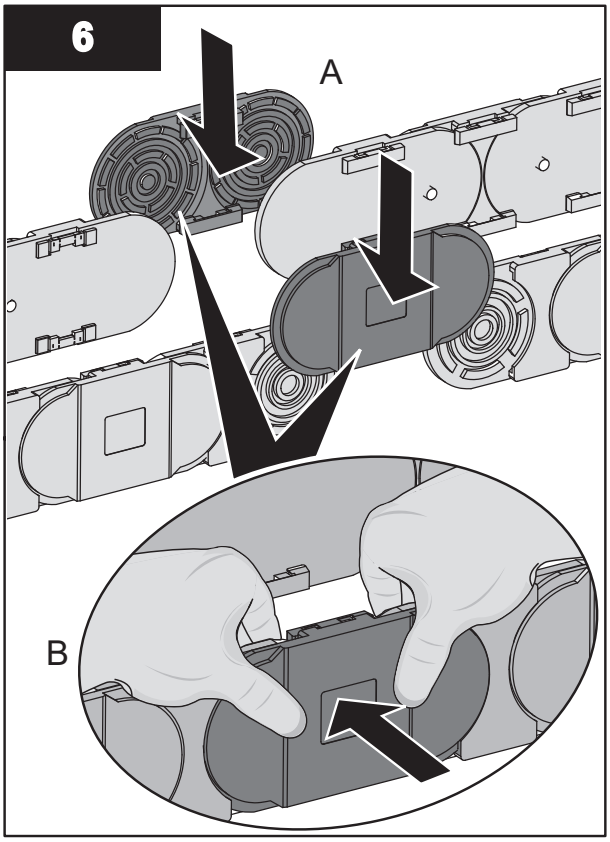

Note: *Press the side plates together to join the chain links.*

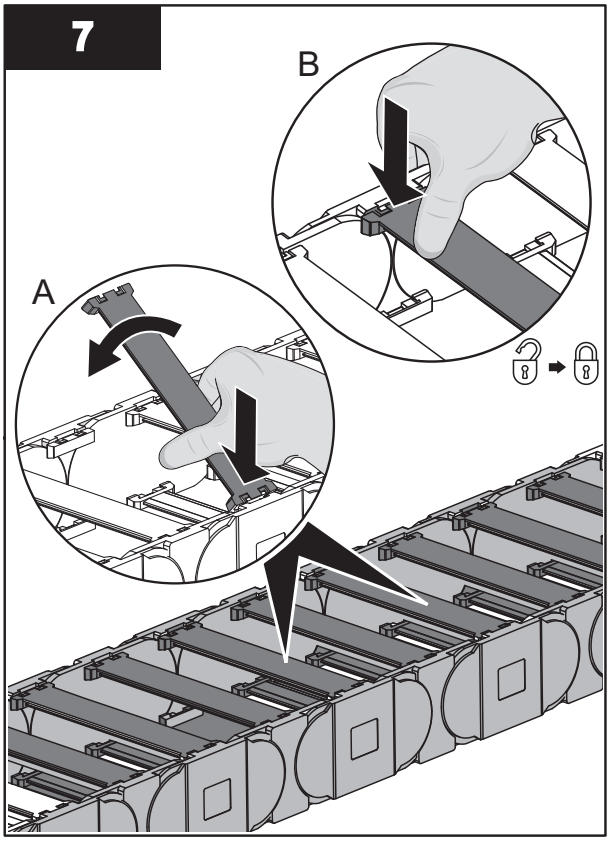

Note: *Install the cross bars.*

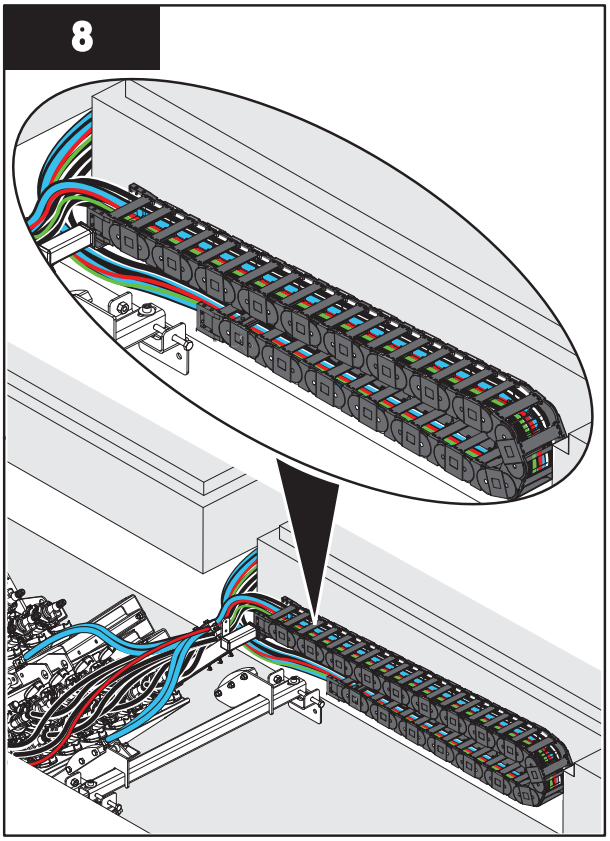

Note: *Route the cables though the Cable Track as shown.*

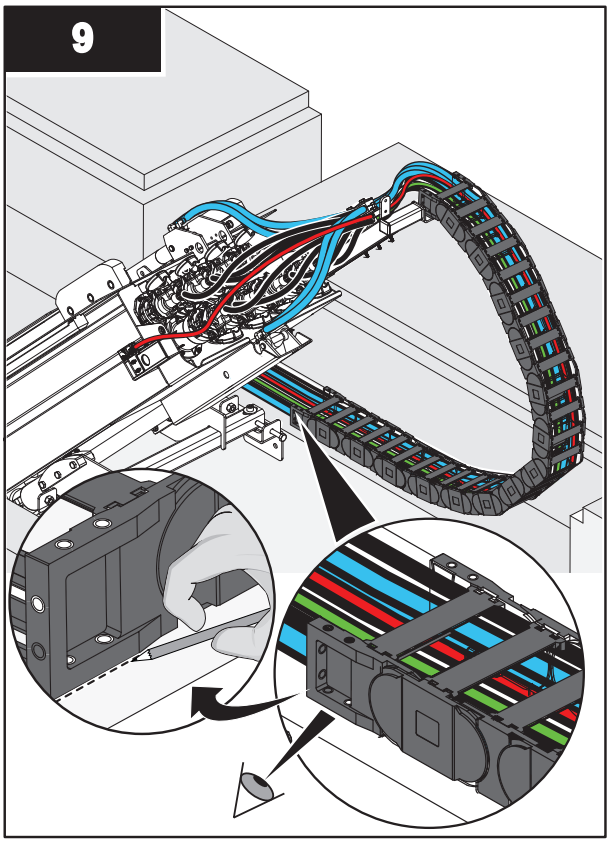

Note: *Lift the UV Bank Up. Refer to Section 8.1.2.*

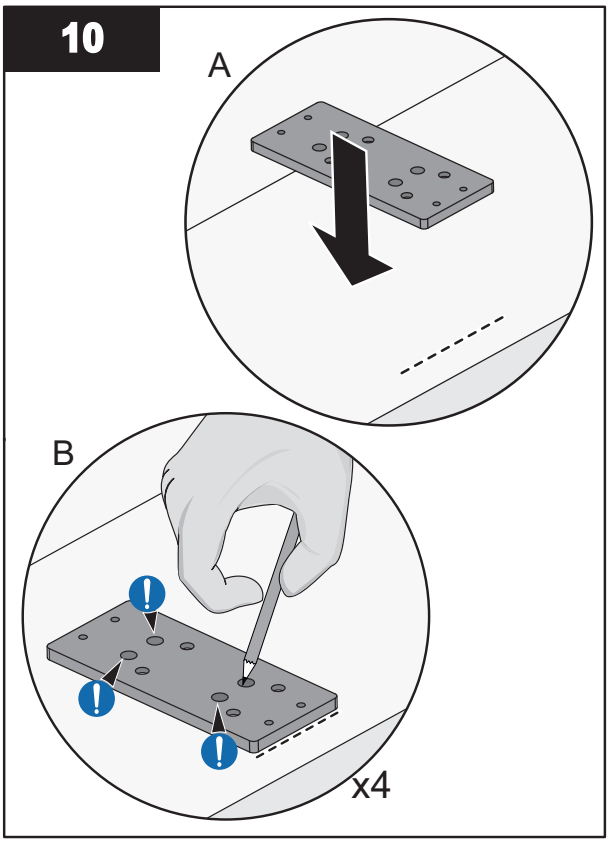

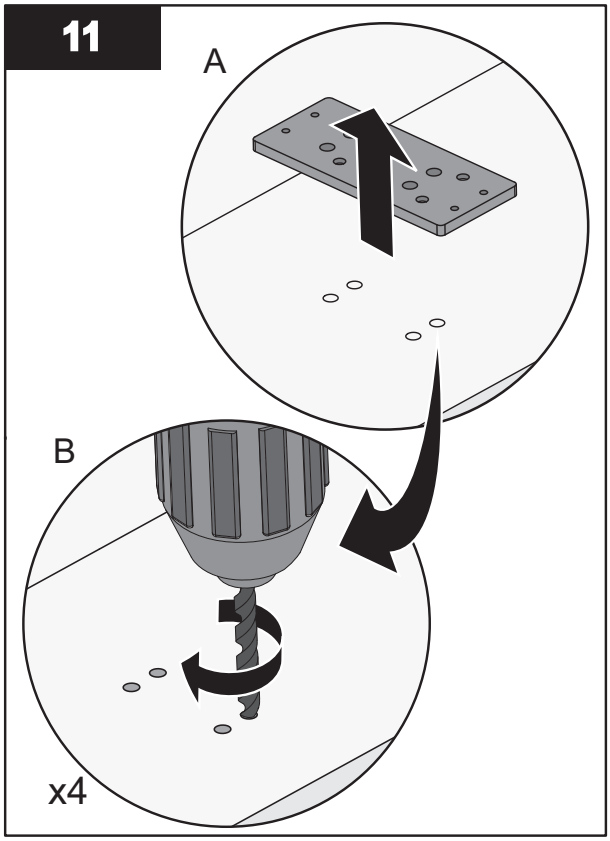

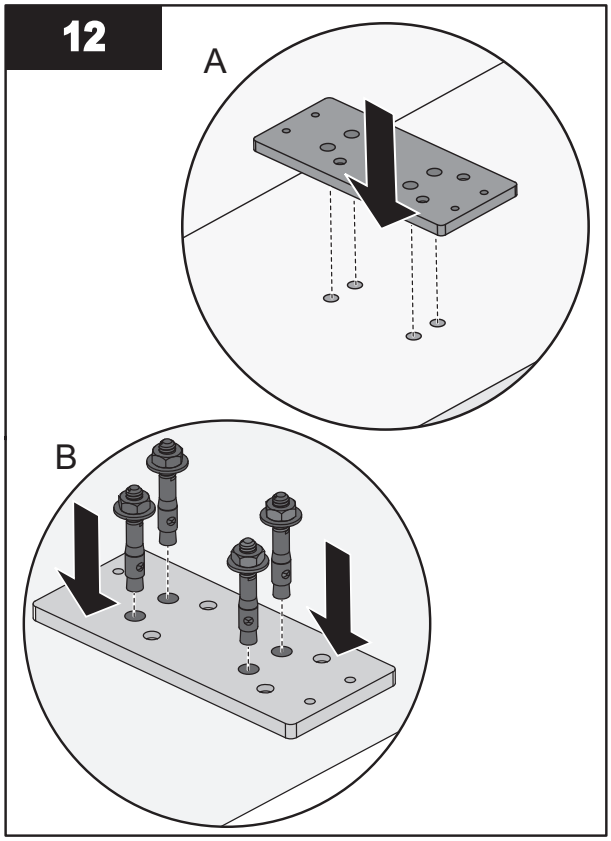

Note: *Install and anchor the mounting plate on the concrete.*

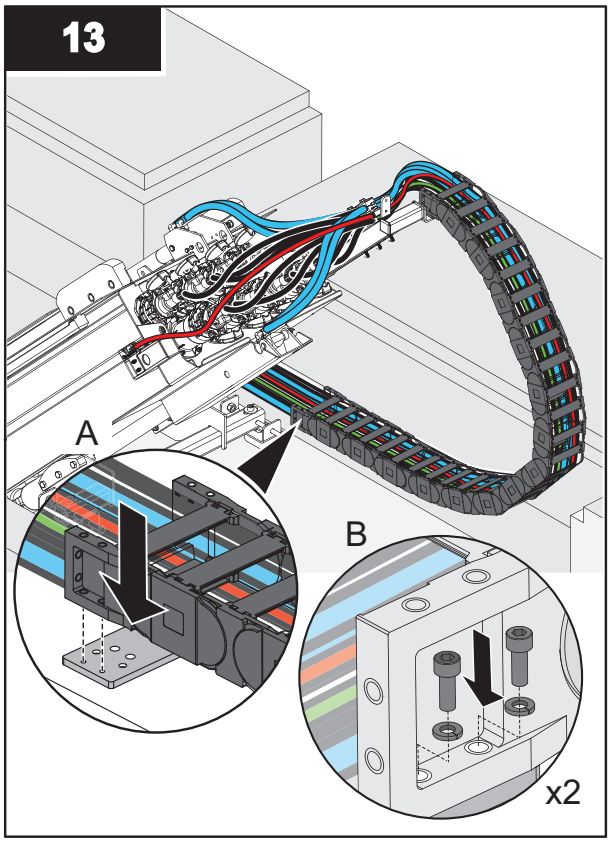

Note: *Install Cable Track mounting bracket to the mounting plate.*

7.16 Level Sensor

One low level sensor is located in each channel between the level controller and the UV bank that is farthest downstream. Additionally, a high level sensor may be provided (project dependent) and is installed upstream of the most upstream UV bank in a channel.

Prerequisites:

- Lockout tag out - PDC compartment. Refer to Section 4.
- Isolate the Inlet Valve or Gate.
- Refer to the layout drawings provided by Trojan Technologies for installation location.

Tools:

Materials:

- 1/4 inch Anchor hardware (by others)
- Electrical Interconnect Drawings, provided

Procedure:

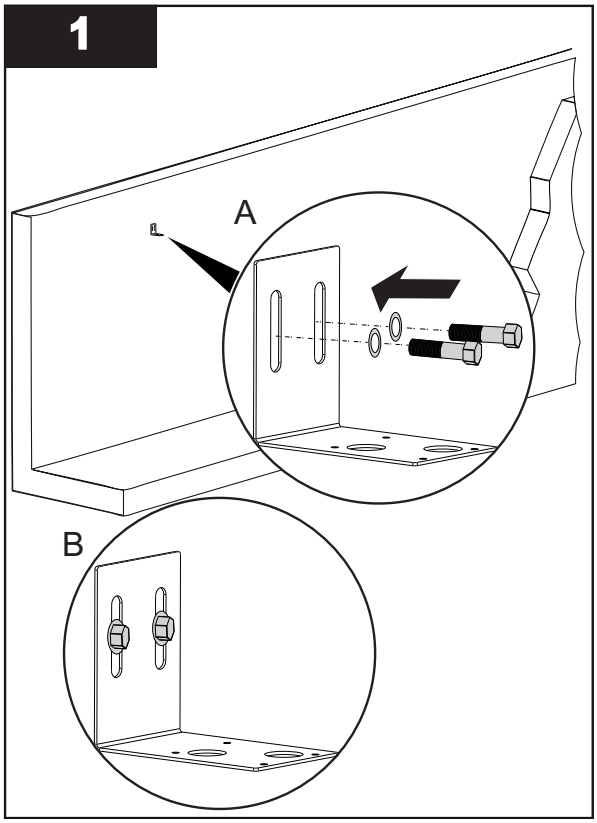

Note: Position the level sensor top wall mounting bracket in the location and elevation specified in the project layout drawings. Ensure that the bracket is plumb with the channel wall.

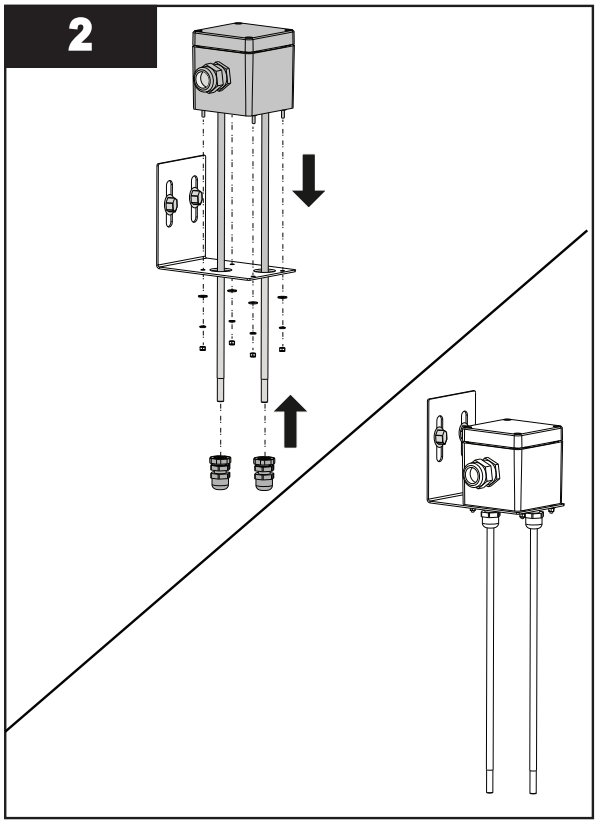

Note: Cut the Level Sensor Rods to the lengths shown on the provided layout drawings. Electrical connections are specified in the layout drawings provided by Trojan Technologies.

***Note:** All openings created on the cabinets MUST be filled with equipment marked with the same type rating, as the enclosure (Ex: Cable Strain Reliefs).*

3. Route and connect the Level Sensor wiring to the Level Sensor Control Box.

7.17 UVI Sensor(s), Lamp Sleeves and UV Lamps

NOTICE

Trojan Technologies personnel must install the UVI Sensors, lamp sleeves and UV lamps in the UV bank.

DO NOT move the wiper, install the UVI sensor, lamp sleeves and UV lamps, a Trojan Technologies associate will do the initial install when contacted for the system inspection.

7.17.1 Install Sensor Housing

Prerequisites:

- Install Lamp Sleeves. Refer to Section 9.4.1.
- Install the UVI Sensor.

Materials:

Procedure:

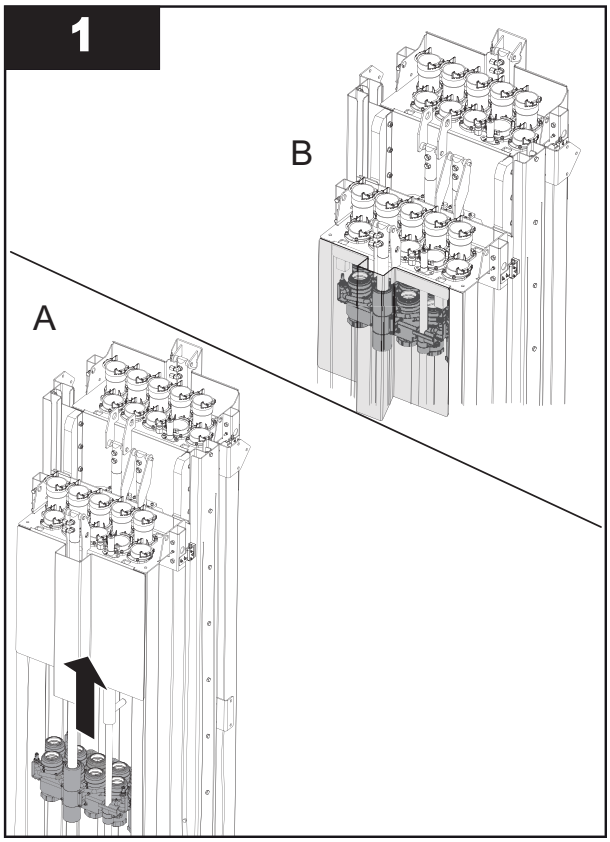

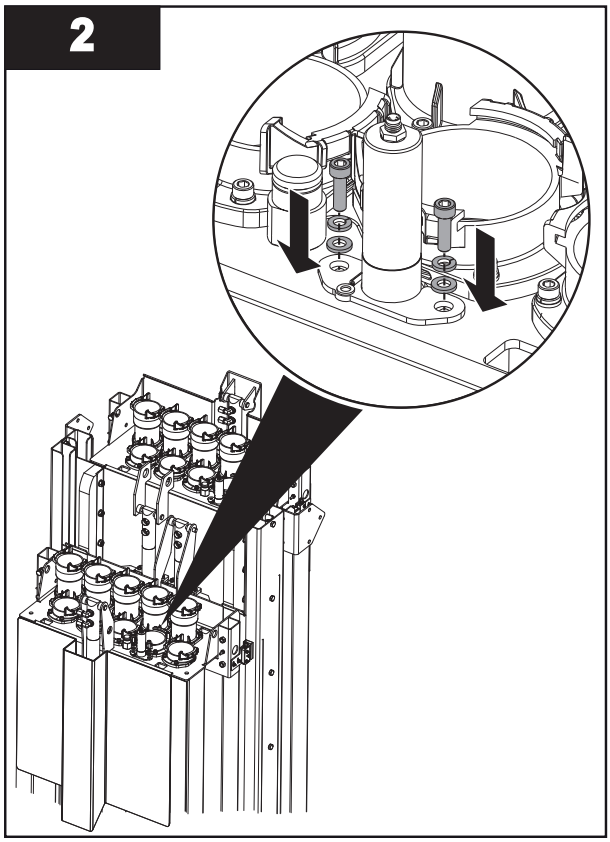

Note: *Home the wiper. Refer to Section 8.1.4.*

7.18 Electrical Connections

7.18.1 SCC Electrical Connections

Prerequisites:

- Use appropriately rated cable and strain reliefs as per the Electrical and Layout Drawings provided by Trojan Technologies.
- Lockout Tag Out devices as required. Refer to Section 4.
- Refer to Electrical Wiring Diagram, Interconnect Drawing and Layout Drawings provided for additional information.

Tools:

Materials:

Procedure:

1. Locate the locations for the incoming power connections and field connections.

   Notes: *1) Power connections are made on the top of the panel, above the main disconnect.*

   2) Field connections are made on the underside of the panel.

2. Open SCC panel door, put a cloth over equipment inside SCC enclosure to protect from metal filings.
3. Drill holes for incoming power and field wiring.
4. Carefully remove the protective cloth without dropping metal filings inside the SCC. Remove all metal filings from SCC.
5. Install the power and all applicable field wiring. Obey all local codes for main incoming power supplies and applicable field wiring.

   Note: *All openings created on the cabinets MUST be filled with equipment marked with the same type rating, as the enclosure (Ex: Cable Strain Reliefs).*

7.18.2 PDC Electrical Connections

Prerequisites:

- Use appropriately rated cable as per the Electrical and Layout Drawings provided by Trojan Technologies.
- Lockout Tag Out devices as required. Refer to Section 4.
- Refer to Electrical Wiring Diagram, Interconnect Drawing and Layout Drawings provided for additional information.

Materials:

- Ferrules (4 required per lamp cable) (provided)
- M6 Nut
- Electrical Drawings, Electrical Interconnect Drawings, provided
- Instruction, TrojanUV Solo Lamp Cable Installation Guideline, Document Number **DC000601-017**
- Instruction, Lamp Cable Routing in PDC, Document Number **DC340601-007**
- Temporary Routing Cable Labels (not provided)
- Cable Labels (provided)

Procedure:

1. Incoming Power - is recommended to be on the top of the panel, above the main disconnect or on the side of the panel on the same side as the main disconnect.

2. Lamp Cabling and Field wiring - open the PDC door and locate the strain reliefs on the bottom of the PDC. (Figure 21).

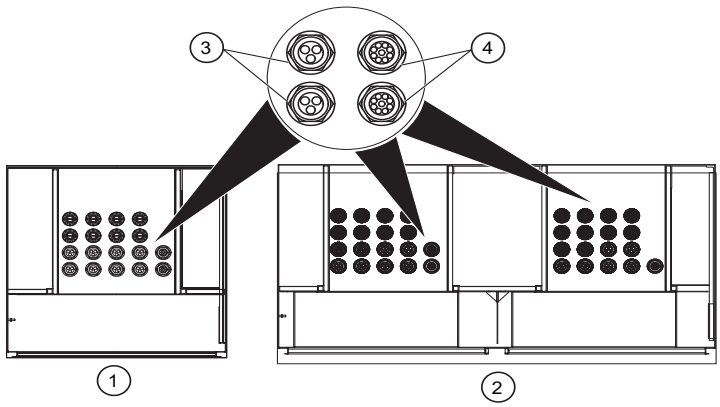

Figure 21 PDC Cable Connections

1	Single Door PDC*	**3**	Reserved for Lamp Cables
2	Double Door PDC*	**4**	Reserved for UVI sensor, low level sensor and bank in place sensor and Bond Wire

* Inside bottom view, when looking in through the door. Conduit strain relief configuration may vary depending on site requirements. Refer to project electrical drawings for additional information.

3. Install the lamp cabling **(Refer to DC000601-017 and DC340601-007)**.
4. Install the bond wire and all applicable field wiring. Obey all local codes applicable field wiring.

   Notes: *1) One Lamp Cable allowed per Strain Relief opening (maximum 3 Lamp Cables per Strain Relief). Plug unused strain relief openings with plugs provided.*

   2) All openings created on the cabinets MUST be filled with equipment marked with the same type rating, as the enclosure (Ex: Cable Strain Reliefs).

   3) Use the ferrules provided for terminating within the PDC. ***Label each end of the lamp cable,*** *with provided cable labels.*
5. Repeats steps 1 through 4 for each PDC.

7.19 Additional Equipment

7.19.1 Water Level Controller

For systems supplied with a water level controller, refer to the layout drawings provided by Trojan Technologies for the location of the water level controller. Refer to DC450101 for Water Level Controller installation instructions.

7.19.2 UV Transmittance Controller and Sensor

For systems supplied with a UV Transmittance Controller and Sensor, refer to the layout drawings provided by Trojan Technologies for the location of the UVT instrument. Refer to the manufacturer's manual for installation instructions.

DANGER

Obey all warning and caution statements. Refer to Section 2.

Read and understand this Operation and Maintenance Manual before operating this equipment. Read all user documentation before performing operations, inspections, repair, or maintenance on this equipment.

Only competent personnel should undertake operation, repairs, maintenance, or servicing of equipment described in this section of the manual. If you do not understand the information or procedure explanations in this manual, STOP and contact your Service Provider for assistance.

8.1 Hydraulic System Center

The hydraulic system is operated remotely from the System Control Center (SCC) HMI or locally from HSC control panel. As an option, the system can be operated Remotely using SCADA if the facility has a SCADA system.

8.1.1 HSC Overview

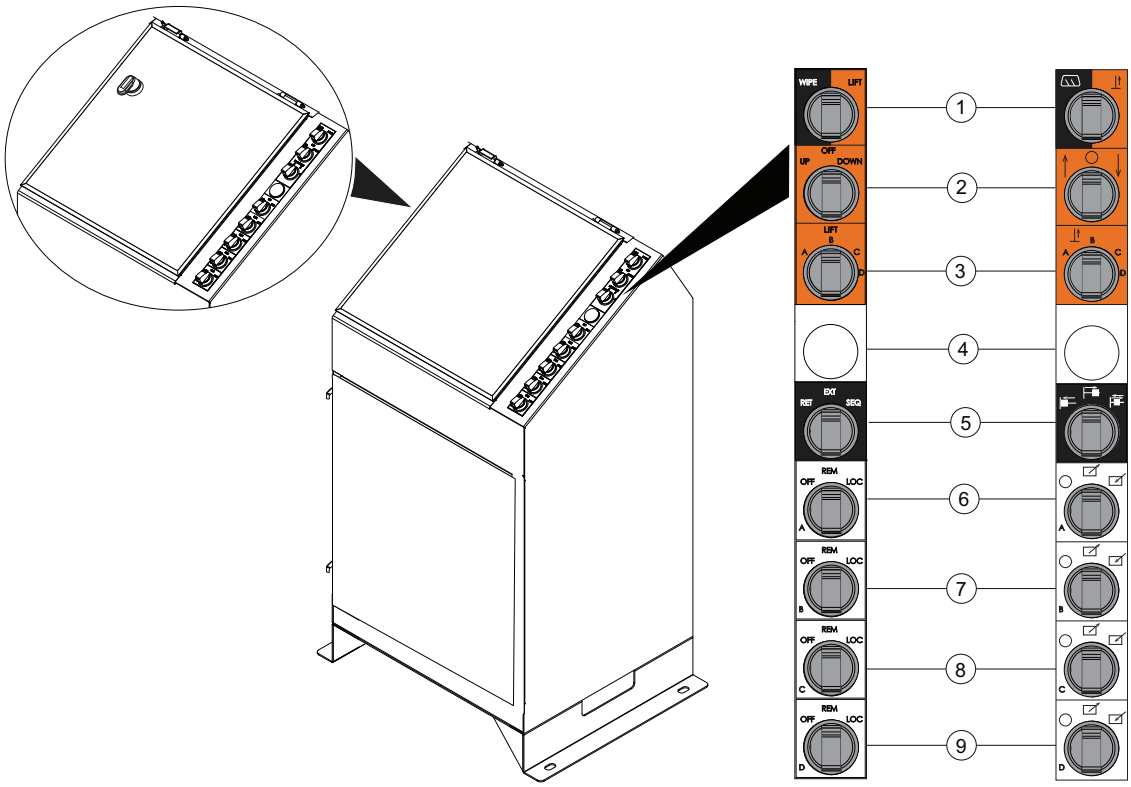

Figure 22 Hydraulic System Center

Item No	Description	Icon	Function
1	HSC Operation Switch	WIPE	Begins wiping operation.
		LIFT	Begins lifting operation. The pump turns ON and waits for an input from the Lift Operation Switch.

Item No	Description	Icon	Function
2	Lift Operation	UP	The chosen UV Bank will be lifted up.
		OFF	Lifting will stop.
		DOWN	The chosen UV Bank will be lowered down.
3	Lift UV Bank Selection		Select the UV Bank to lift or lower.
4	Blank Cap		N/A
5	Wiper Operation Switch	RET	It applies to wipers and functions when any wiper is switched from OFF to LOC position. ***Note:*** *Once a function has been performed, switch item 5, 6, 7 or 8 to OFF before selecting another Extend or Retract function.* Wiper will move from the lower end (bottom of the UV Bank) to the Home position (top of the UV Bank).
		EXT	Wiper will move from the Home position (top of the UV Bank) to the lower end (bottom of the UV Bank).
		SEQ	Wiper will extend and retract if wiper is at Home, otherwise wiper will retract back to Home position and perform a full cycle of wiping.
6, 7, 8, 9	UV Bank (A, B, C, D) Wiper Mode Switch	OFF	Wiper disabled or wiping will be stopped if the wiper is wiping before it is switched to OFF.
		REM	Wiper operates in Remote mode. In the is mode, wiper can: • Perform a manual wipe upon receiving wiping command from HMI. • Wipe automatically under control of internal wiping cycle timer.
		LOC	When wiper is switched from OFF to LOC, wiper will start the specified wiping operation depending on the Wiper Operation Switch position.

8.1.2 Lift the UV Bank Up/Down

Prerequisites:

- Shutdown the UV Bank. Refer to Section 5.2.
- Remove Grating section(s).
- Verify there are no obstructions in lift area.
- Ensure all personnel are clear of UV Bank while manually operating the lifting function.

NOTICE

To avoid equipment damage, make any necessary adjustments to lamp cables prior to the lifting operation.

Materials:

- Bank Locking Plates

Procedure:

1. HSC Operation switch ⟶ or (LIFT) ⟶ Select the UV Bank (1,2,3 or 4).
2. To lift the UV Bank Up (Extend):
   a. Turn and hold the Lift Operation selector switch in the ↑ or (UP) position to raise the UV Bank until the UV Bank is fully lifted.
   b. HSC Operation Switch ⟶ ◯ or (OFF) position
   c. Install the UV Bank locking plates (Figure 23).
   d. Adjust grating around lifted UV bank to eliminate openings to channel.
3. To lift the UV Bank Down (Retract):
   a. Remove the UV Bank locking plates (Figure 23).
   b. Turn and hold the Lift Operation selector switch in the ↓ or (DOWN) position to lower the UV Bank until the UV Bank is fully lowered.
   c. HSC Operation switch ⟶ ◯ or (OFF) position.
   d. Install grating section(s).
   e. Adjust grating around lifted UV bank to eliminate openings to channel.

NOTICE

Never perform maintenance on the UV Bank until all locking plates are in place.

If you can not raise the bank to the level required to install the bank locking plates – lower the bank to its home position and contact Technical Assistance Centre for troubleshooting assistance.

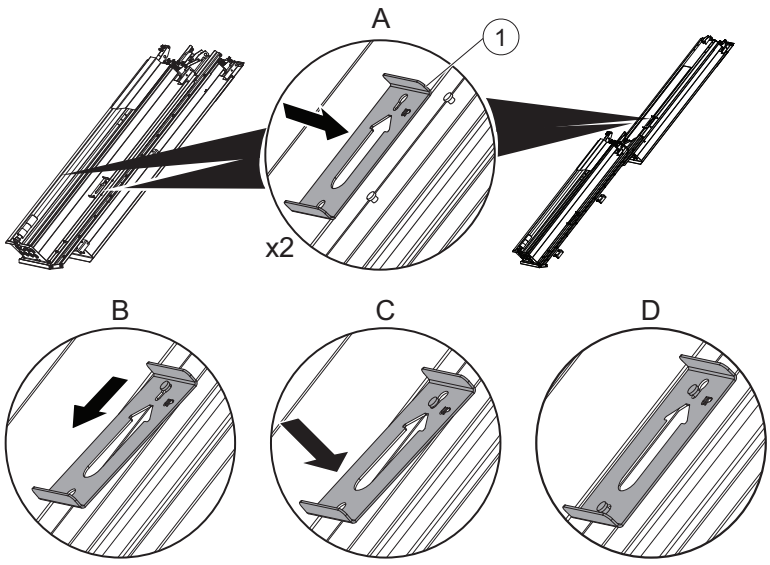

Figure 23 Locking Plate

1	Locking Plate

8.1.3 Wiper Control Modes

8.1.3.1 Wiper Remote Control

SCC or SCADA will control the operation of HSC wiping function.

1. HSC disconnect ⟶ “ON”.
2. HSC operation switch ⟶ or (WIPE).
3. UV Bank wiper mode switch ⟶ or (REM).

8.1.3.2 Wiper Local Control

Note: *Used for service purpose only.*

1. HSC disconnect ⟶ “ON”.
2. HSC operation switch ⟶ or (WIPE).
3. Wiper Mode Switch ⟶ or (LOC) for required UV Bank.

8.1.3.3 Wiper Sequence Control

Note: *Used for service purpose only.*

1. HSC disconnect ⟶ “ON”.
2. HSC operation switch ⟶ or (WIPE).
3. Wiper Operation ⟶ or (SEQ) for required UV Bank.

8.1.4 Manually Operate the Wiper

Prerequisites:

- Wet the lamp sleeve at the wiper plate with water, if the UV Bank is in service position.
- Put the Wiper into Local Control Mode (Section 8.1.3.2)
- Ensure all personnel is clear of UV Bank while manually operating the wiping function

Materials:

Procedure:

Retract (Home) the Wiper

1. Select Applicable Wiper Group ⟶ or (RET) until the wiper is at the top of the UV Bank.
2. UV Bank wiper mode switch ⟶ ◯ or (OFF).

Note: *When retracting the wiper assembly, to prevent damage to the equipment, make sure the assembly plate does not contact the baffle during travel.*

Move the Wiper to 1/2 way

1. Applicable wiper operation switch ⟶ or (EXT) if in the Home Position or to or (RET) if in the Park position, wait for the wiper to reach 1/2 way along the sleeve.
2. UV Bank wiper mode switch ⟶ ◯ or (OFF).

Extend the Wiper

1. Applicable wiper operation switch ⟶ or (EXT) until the wiper reaches the bottom.
2. UV Bank wiper mode switch ⟶ ◯ or (OFF).

8.1.5 Reset HSC Latched Alarms

1. Resolve the cause of the latched alarm.
2. Bank Mode Switch ⟶ Turn from or (REM) to ◯ or (OFF) to or (REM).

8.2 Power Distribution Center

8.2.1 Enable PDC Remote Control

When PDC is in Remote control, SCC or SCADA controls the output of the PDC.

1. PDC disconnect ⟶ | or (ON).
2. PDC mode selector switch ⟶ or (REM).

8.2.2 Enable PDC Local ON

PDC output is set to 100% and will not be controlled by SCC or SCADA.

1. PDC disconnect ⟶ | or (ON).
2. PDC mode selector switch ⟶ | or (ON).

8.3 System Control Center

The SCC contains the control program for the UV system. The SCC is configured at the factory with inputs and outputs as required for each system. The manufacturer configures the functionality of each of the signals in the control strategy.

Daily operation includes monitoring the system functions, and may occasionally require the operator to manually initiate or control the processes.

8.3.1 Navigate the Human Machine Interface

The HMI for the controller uses touchscreen technology. Do not use the writing tips of pens or pencils or other sharp objects to make selections on the screen. Use only a clean, dry finger tip or the eraser tip of a pencil.

Table 4 User Interface Navigation (Main Level)

Icon	Screen	Description	Refer:
	Overview (Home)	An operational summary of all UV channels and UV Banks. Allows access to Priority Assignment screen and to manually enter flow and UVT values.	Section 8.3.2
	UV Channel Overview	Allows access to control slide gates. Allows access to control and display UV channel specific information. Allows access to the ***UV Bank Overview Screen***. Refer to Section 8.3.4	Section 8.3.3
	Wiper Overview	Allows access to control wiper/cleaning system.	Section 8.3.5
	Trends	Displays trend data for flow, UVT and dose.	Section 8.3.6
	Alarm Status	Displays the currently active alarms and allows access to Alarm History screen.	Section 8.3.7
	System Settings	Allows access to system configuration settings as allowed by current security level. Settings are organized in pages by function.	Section 8.3.8
	Information	Shows information about the control system hardware and software. It also allows access to change the clock time and other HMI maintenance functions.	Section 8.3.9

The icon turns to ‘negative’ when a related screen is open.

Figure 24 Home

1 Home - Overview	**2** Home - Negative Overview

	The UV channel icon displays a yellow warning indicator when any Minor alarm condition exists on a UV channel/UV Bank related device.
	The UV channel icon displays a red alarm indicator when any Major/Critical alarm condition exists on a UV channel/UV Bank related device.

	The wiper icon is visible if the wiper option (setting) is enabled. The wiper icon displays a yellow warning indicator when any Minor alarm condition exists on a wiper related device.
	The wiper icon displays a red alarm indicator when any Major/Critical alarm condition exists on a wiper related device.
	The alarm icon displays a red circle indicator with a numeric value in the Center. The value represents the number of active alarms in the entire system. Greater than 100 alarms is displayed as “>>”. The indicator disappears when the number of active alarms is 0.

8.3.1.1 Screen Overview

Home screen (Section 8.3.2)		
DOSE	Shows UV dose output of all UV Banks currently in operation. The applied UV dose is calculated based on UVT, operating power levels of the UV Banks, flow, and lamp age.	
FLOW	Shows the current total system flow value used for dose pacing. The Flow/Manual Flow selector above the currently displayed flow value will toggle the current flow signal source between the configured input instrument source, and a manually entered value.	
UVT(%)	Displays the current UVT value used for dose pacing. If required, the UVT can be manually entered.	
Fault Reset	Resets Not Enough Healthy UV Channels.	
UV Channel Screen (Section 8.3.3)		
Inlet Gate Selector	Inlet Gate status and control screen	
UV Bank Selector	Navigate into UV Bank overview screen	
	Lamp Driver Display	Driver Information display. Resets each individual lamp hours
	UV Bank Mode Selection	Changes UV Bank operation mode
	UV Bank Priority	Changes UV Bank priority
	Override UV Bank Info	Overrides UV Bank Lamp Hours, UV Bank Hours, UV Bank Cycles
	Reference Sensor	Check the duty sensor to a reference sensor
UV Channel Priority Selector	Changes UV Channel / UV Bank priority	
Outlet Gate Selector	Outlet Gate status and control screen	
Wiper Screen (Section 8.3.5)		
Health	Displays current wiper system health condition	
Wiper detail	Displays detailed wiper information	
	Wipe UV Bank	Performs wiping action on current bank
Wipe all	Performs wiping action on all banks if condition allows	
Trending (Section 8.3.6)		
Display	Displays trending of flow, dose and UVT in past 8 hours	
Change Scale	Changes maximum and minimum of Y axis on trending window	
Alarm (Section 8.3.7)		
Active Alarm display	Displays all active alarms	
History Alarm display	Displays a list of historical alarms	

Settings (Section 8.3.8)	
General Settings	General settings for the system
Wiper Settings	Wiper control settings
Flow Settings	Settings for default and low flow set point
UVT Settings	Settings for default and low UVT alarm set point
Intensity Settings	UVI sensor settings
Dose Settings	Settings for dose requirement
Time Delay Settings	Time delay for alarms
UV Channel Settings	UV Channel fill, open and close delay, inlet travel time
Water Level Settings	Maximum and minimum water level settings
Outlet Gate Settings	Settings for outlet weir gate

8.3.1.2 System Status and Health

The system status is displayed in the top left hand corner of all main level screens. The system status will display either **ON** or **OFF** and includes a graphical icon to indicate the health of the system.

Icon	Icon Color	System Health
	Green	Healthy
	Yellow	Unhealthy with minor alarm(s) active
	Red	Unhealthy with critical/major alarm(s) active

8.3.1.3 Login

The SCC Operator Interface is configured with security access restrictions.

Level	User / User Name	Access	Password
1	No Login	User may view all unrestricted data.	Not required
2	Operator	User may view all unrestricted data and enter process data, control process equipment and adjust process control setpoints. The password protection can be removed by placing the “Operator Login Required” system setting to “No”.	11111
3	Maintenance	User has access to configuration of process control strategies and displays.	Password is provided to approved trained personnel

To login:

1. Press LOGIN ⟶ User Button⟶ Input User Name ⟶ (↵)
2. Press PASSWORD ⟶ Input Password ⟶ (↵)

Notes: *1) The Login button displays ‘LOGIN’ when no user is logged in.*

2) The Logout displays the name of the current logged in user. Pressing it logs the user out.

8.3.2 Home Screen

The Home Screen displays:

- On restart of the HMI
- When a user logs out
- After the inactivity time-out expires (30 min)

Figure 25 Home Screen

Item	User / User Name	Button/Text	Description/Action	Refer:
1	UVT Bar Graph and Override Button	UVT	If the device input type is set to anything other than manual, a grey gradient button will be displayed. If the device input type is set to manual, a white box appears, this allows the user to change the manual value. *Value can be manually overridden (Section 8.3.2.3).* The bar graph dynamically displays the full scale value of the device set in the Settings Screens. The realtime values are displayed to the right of the graph. The grey indicator arrow below the graph indicates alarm setpoints. If the bar position moves to the left of the arrow, an alarm will be triggered.	*Section 8.3.2.1*
2	Flow Bar Graph and Override Button	Flow		
3	RED (Dose) Bar Graph	T1, MS2 etc.	The bar graph dynamically displays the dose calculated by the PLC. The realtime value is displayed to the right of the graph. The red text to the left of the RED bar graph, indicates the type of microbe selected (i.e. T1, MS2 etc.) for use in dose equations. The grey indicator arrow below the graph indicates the RED target. If the bar position moves to the left of the arrow, an alarm will be triggered.	
4	Channel Navigation Buttons	Channel 1 Open	The status and health of each UV Channel in the system is displayed on the gradient push button. Push to navigate to the Channel Overview Screen (Section 8.3.3).	*Section 8.3.2.2*
5	Not Enough Healthy Channels Reset		NOT ENOUGH HEALTHY CHANNELS RESET blue pushbutton displays whenever a latched Not Enough Healthy UV Channels alarm is determined by the PLC. Reset to unlatch the alarm.	*Section 8.3.2.4*

8.3.2.1 Bar Graph

Bar Color	Icon	Icon Color	Description
Green	--	--	Value is within design parameters.
Red		Yellow	Value has dropped below the design low setpoint or exceeded the design high setpoint. A Minor Alarm is active.
Red		Red	Value has dropped below the design low setpoint or exceeded the design high setpoint. A Major Alarm is active

8.3.2.2 Channel Navigation Buttons

Icon	Channel Status
Open	Channel is Open
No icon	Channel is Closed
	Channel is Opening
	Channel is Closing

Icon	Icon Color	Channel Health
No icon	No icon	Healthy
	Yellow	Minor alarm present (Yellow)
	Red	Major alarm present (Red)

8.3.2.3 Override Flow and UVT Settings

Manual/override of Flow and UVT values

The *Flow* and *UVT* values can be overridden by the operator based on the input device type that was selected in the Settings Screens.

Calculated

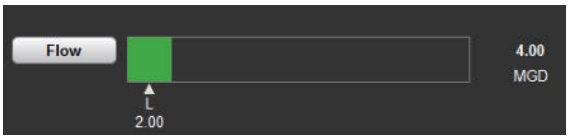

Figure 26 Calculated Value

The button to the left of the Flow and UVT graph is shown as a button if the respective input type of the device is set to anything other than *Manual*. The button is a grey gradient when the value is not overridden. The numeric display to the right of the graph appears as white text on a black background when the override is off. (Figure 26).

Manual

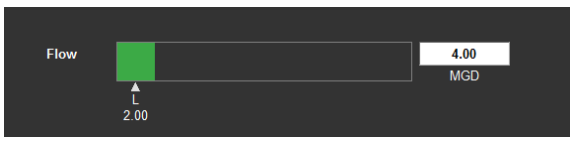

Figure 27 Manual Value Entry Field

Figure 28 Manual Value Entered

A white box appears behind the value indicating that the input type of the device is set to *Manual*. The operator can press this box to change the value (Figure 27).

The button is a yellow gradient when the value is overridden. The numeric display to the right of the graph appears as black text on a yellow background when the override is on (Figure 28).

8.3.2.4 Not Enough Healthy UV Channels Reset

1. Push NOT ENOUGH HEALTHY CHANNELS RESET ⟶ YES or NO

8.3.3 UV Channel Overview Screen

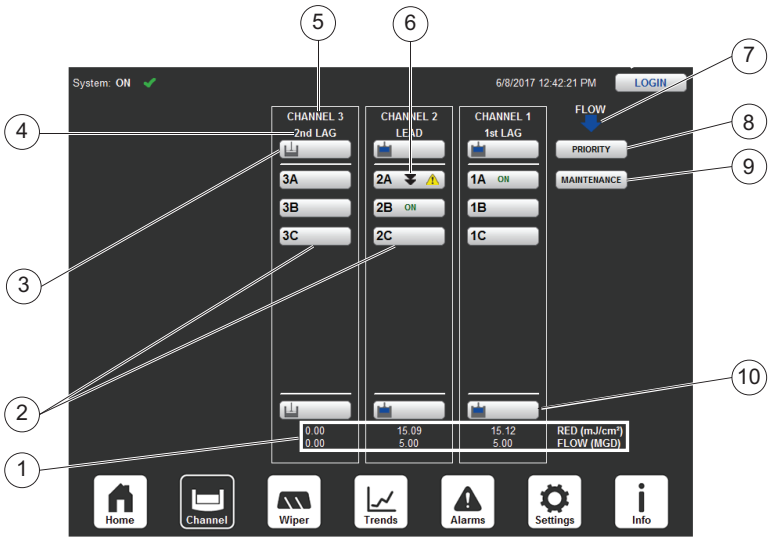

Figure 29 UV Channel Overview Screen

1	Displays current measured FLOW and RED (dose)	**6**	Channel Status Indicator
2	Navigates to Bank Overview Screen	**7**	Indicates direction of effluent flow
3	Inlet Gate Control Button (Section 8.3.3.2)	**8**	UV Channel Priority button (Section 8.3.3.1)
4	Assigned Channel Priority Display	**9**	UV Channel Maintenance button (Section 8.3.3.4)
5	UV Channel	**10**	Outlet Gate Control Button (Section 8.3.3.3)

Low Level Alarm and Warning Indicators

In the event of low water conditions, the following text “LOW WATER” will display at the bottom of each UV Channel in yellow (warning) or red (alarm) color.

Channel Status Indicators

There are four states used to represent the current state of the channel.

Note: *Channel coming online and Channel going offline are only available if inlet gates are present.*

Icon	Description
ON	The channel is in operation
⏫	The channel is coming online
⏬	The channel is going offline
No Icon	The channel is off

8.3.3.1 Change UV Channel Priority

The Priority button is displayed for systems with more than one UV Channel and allows the operator to change the priority of the Channel.

The Channel priority is default set to AUTO sort with a user defined auto sort interval. When the operational hours have elapsed, the controller will automatically resort the priority of the UV Channels. Optionally, a user may choose to manually assign channel priorities.

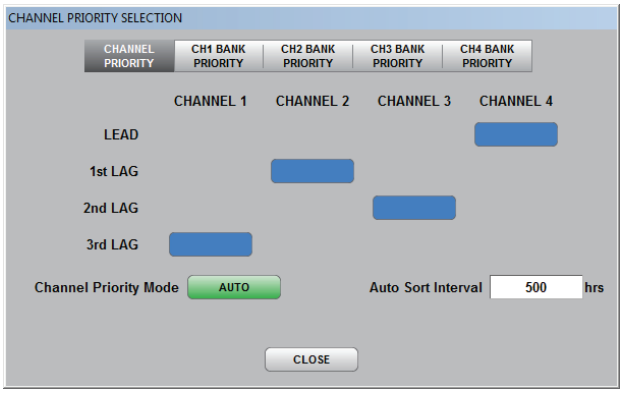

Figure 30 Channel Priority in Auto Mode

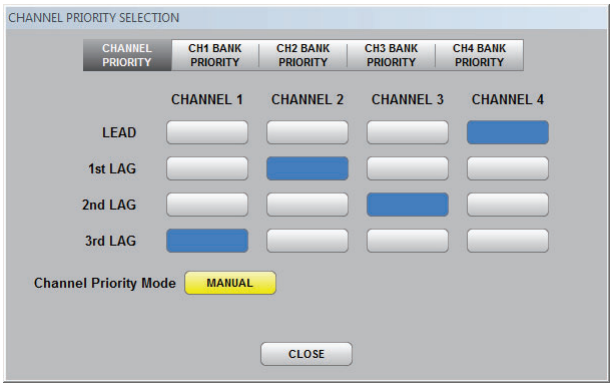

Figure 31 Channel Priority in Manual Mode

Value	Description
AUTO	When the Auto Sort Interval has expired, the priority of the UV Channels will automatically be sorted based on channel runtime hours.
MANUAL	UV Channel priority is manually assigned.
Auto Sort Interval	Frequency to automatically sort UV Channel.

Manually assign Channel Priority

1. Press PRIORITY (Figure 29, Item 8).
2. Press the desired channel to set priority. The selection will turn blue which indicates the priority has been assigned.

   Note: *UV Channels must have unique priority assignments. If unique assignments are not selected, a "PRIORITY SELECTIONS ARE NOT UNIQUE" alert will be displayed on the Channel Priority screen.*

3. ACCEPT or CANCEL.

   Note: *ACCEPT and CANCEL pushbuttons appear after a change has been made.*

8.3.3.2 Inlet Gate Control

Inlet gates may be automatically controlled via the SCC or Plant SCADA. If the gates are automatically controlled, a gate icon will be displayed on the UV Channel Overview Screen (Figure 29, Item 4).

The Inlet Gate button displays the gates current status and health.

Icon	Description
	Gate is open or flow is present (Blue)
	Gate is closed or no flow is present (Grey)
	Gate is opening
	Gate is closing

Icon	Description
No icon	Healthy
	Minor alarm present (Yellow)
	Major alarm present (Red)

To change the inlet gate control to Auto or Manual Control Mode:

1. Press the Inlet Gate button.
2. Select either AUTO or MANUAL control mode button as required.

To change the inlet gate control into Local Control Mode:

1. Go to the actuator on the inlet gate and change control to LOCAL.

   Note: *The inlet gate control pop-up screen will display an "INLET GATE IN LOCAL" status.*

To manually open or shut the inlet gate:

1. Put Inlet Gate into MANUAL control mode.
2. Press OPEN or SHUT as required.
3. Press CLOSE button.

To reset an inlet gate latched alarm:

1. Press the Inlet Gate button.
2. Press FAULT RESET button.
3. Press CLOSE button.

8.3.3.3 Outlet Gate Control

Outlet gates may be automatically controlled via the SCC or Plant SCADA. If the gates are automatically controlled, a gate icon will be displayed on the UV Channel Overview Screen (Figure 29, Item 10).

The Outlet Gate button displays the gates current status and health.

Icon	Description
	Gate is open or flow is present (Blue)
	Gate is closed or no flow is present (Grey)
	Gate is opening
	Gate is closing
No icon	Healthy
	Minor alarm present (Yellow)
	Major alarm present (Red)

To change the outlet gate control to Auto or Manual Control Mode:

1. Press the Outlet Gate button (Figure 29, Item 10).
2. Select either AUTO or MANUAL control mode button as required.

To change the outlet gate control into Local Control Mode:

1. Go to the actuator on the inlet gate and change control to LOCAL.

   Note: *The outlet gate control pop-up screen will display an "OUTLET GATE IN LOCAL" status.*

To manually raise or lower the outlet gate:

1. Put Outlet Gate into MANUAL control mode.
2. Press RAISE or LOWER as required.

3. Press CLOSE button.

To reset an outlet gate latched alarm:

1. Press the Outlet Gate button.
2. Press FAULT RESET button.
3. Press CLOSE button.

To toggle the gate position display (between % OPEN or Inches or cm)

1. Press the Outlet Gate button.
2. Press the gate position toggle button to change between %OPEN and in or cm.

8.3.3.4 Maintenance Mode

When a UV Channel is set to MAINTENANCE mode, the UV controller will:

- Close all gates in the associated UV Channel
- Turn off all UV Banks in the associated UV Channel.

The UV Channel will then be removed from any dose pacing and all alarms to SCADA from associated UV Channel will be muted except for the “Channel X Maintenance Mode Enabled” Minor alarm.

Note: *UV Banks and gates can still be operated locally in Maintenance Mode.*

To Enable Maintenance Mode:

1. Select the “MAINTENANCE” button on the UV Channel Overview Screen (Figure 29, Item 9).
2. Channel Maintenance Mode Pop-up screen, select ENABLE on the required channel.

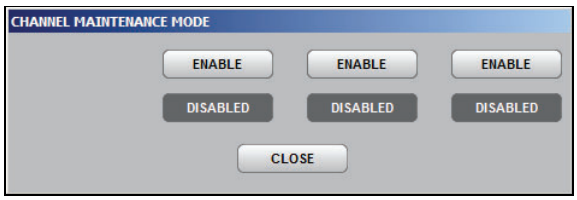

3. Channel x Maintenance Mode Confirmation pop-up screen, select “YES” to proceed or “NO” to cancel.

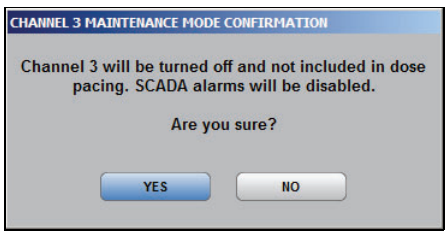

4. When a UV Channel is enabled for maintenance:
   a. ENABLED button on the Channel Maintenance Mode pop-up will be colored green.

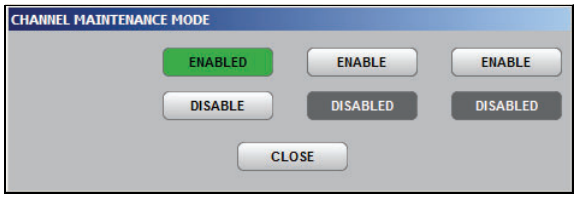

b. The UV Channel Overview screen will display the channel currently enabled for Maintenance by displaying “MAINTENANCE” at the bottom of the Channel display.

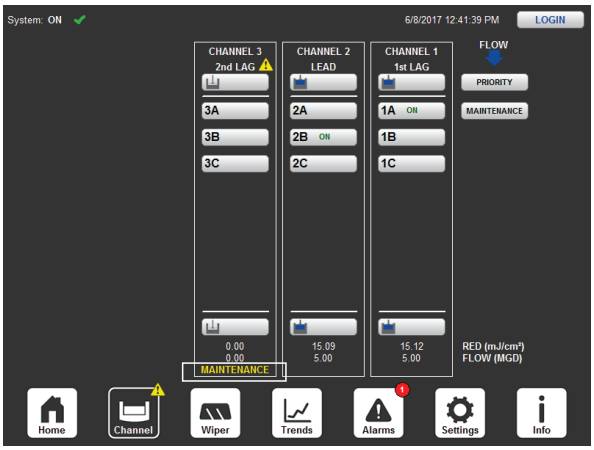

To Disable Maintenance Mode:

1. At any time, press the “DISABLE” button. The UV Channel will be resume normal operations.

8.3.3.5 Offline Mode

This mode is used by approved service personnel. It is used primarily during start-up when the UV Channels being started up need to be staggered over a longer period of time.

Note: *This screen is not intended to be used as a maintenance mode. The system must be shut down properly or not yet installed in the UV Channel(s).*

The user must login to OEM level to enable this function.

When a UV Channel is set to OFFLINE mode, the UV Controller will:

- Mask graphics for the offline UV Channel(s)
- Mask alarms for the offline UV Channel(s)
- Disable communications to the Prosoft Communication Card.
- Enable a ‘Channel x In Offline Mode’ alarm.

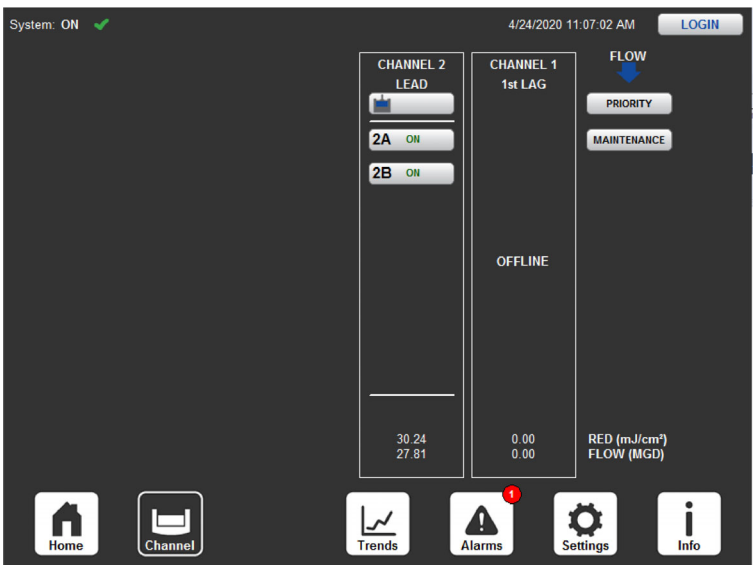

Figure 32 UV Channel Offline Mode

8.3.4 UV Bank Overview Screen

UV Channel Overview screen ⟶ UV Bank number.

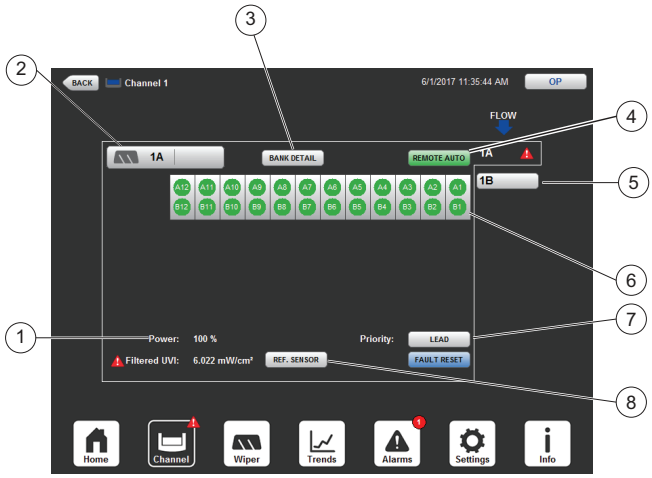

Figure 33 UV Bank Overview Screen

1	Bank Parameters	**5**	Bank Navigation Buttons
2	Wiper Quick Switch Button (Section 8.3.4.6)	**6**	UV Lamp and Driver Button
3	Bank Details	**7**	Bank Priority Button
4	Bank Mode Button (Section 8.3.4.1)	**8**	Reference Sensor Button

Low Level Alarm and Warning Indicators

In the event of low water conditions, the following text “LOW WATER” will display beside the Bank Mode Button (Figure 33) in yellow (warning) or red (alarm) color.

Bank Not In Place Alarm Indicator

In the event of the UV Bank not fully lifting down into the Bank Frame, the following text “NOT IN PLACE” will display beside the Bank Mode Button (Figure 33) in red (alarm) color.

8.3.4.1 Change UV Bank Mode

1. Press the Bank Mode Button ⟶ REMOTE OFF or REMOTE ON or REMOTE AUTO (from the Remote Mode pane) (Figure 33, Item 4).

8.3.4.2 Lamp Driver and UV Lamps Status

Lamps and Lamp Drivers are displayed in the physical arrangement of the UV Bank.

UV Lamps

The circles represent the UV Lamps and are named according to the label designation on the physical lamp.

The lamp circle changes color based on the status of the UV Lamp.

Icon	Icon Color	UV Lamp Status
	Black	Off and healthy
	Black and red	Off and unhealthy with major/critical alarm(s)
	Black and purple	Disabled; lamp off and cool down timer is counting down
	Black and green	Disabled; lamp off and cool down timer is expired

Icon	Icon Color	UV Lamp Status
	Black and yellow	Off and unhealthy with minor alarm(s).
A1	Magenta	Re-igniting
A1	Red	On and unhealthy with major/critical alarm(s)
A1	Green	On and healthy
A1	Yellow	On and healthy with minor alarm(s).

Lamp Drivers

The gradient rectangle push-button that surrounds a pair of lamps (or 1 lamp if it is a half driver) displays the status of each lamp driver.

Icon	Border Color	Lamp Driver Status
A1 B1	Red	Major Alarm
A1 B1	Yellow	Minor Alarm
A1 B1	None	Healthy

Press the *Driver* push-button to display additional details about the respective driver/lamp(s) (Section 8.3.4.3).

8.3.4.3 Lamp Driver Detail Screen

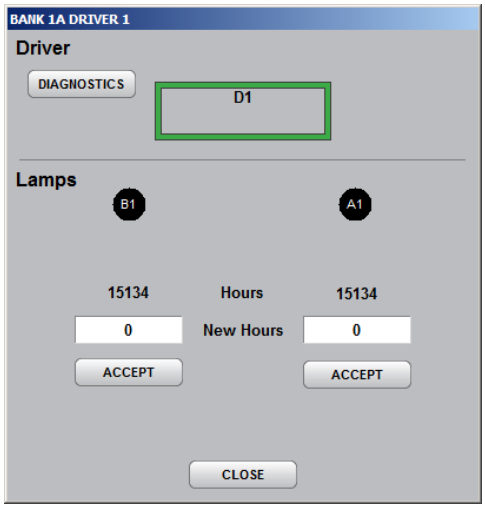

Figure 34 Lamp Driver Detail Screen

The lamp driver identification is displayed in the center of a rectangle. The border color of the lamp driver changes based on the lamp driver status:

Border Color	Alarm	Lamp Driver Status
Green	None	Healthy
Yellow	Minor Alarm	Minor Alarm
Red	Major Alarm	Major or Critical Alarm
Red	Comm. Failure	Communication Failure between BCB and Lamp Driver or between the SCC and BCB

8.3.4.4 Reset Lamp Driver Fault

A blue gradient Fault Reset pushbutton will appear whenever there is an alarm on the lamp driver.

To reset the faults:

a. Bank Overview Screen ⟶ RESET.

8.3.4.5 Reset Bank Fault

A blue gradient Fault Reset pushbutton will appear whenever there is a latched alarm on the bank.

To reset the faults:

a. Bank Overview Screen ⟶ RESET

b. Reset all faults in Bank xx pop up ⟶ YES or NO

8.3.4.6 Wiper Quick Switch Button

Selecting this button will navigate to a Wiper Detail screen for the wiper group associated with the currently displayed bank (Section 8.3.5.1).

8.3.4.7 Override Operating Hours of Individual Lamp

When a new lamp is installed (OP1 Login required):

1. From UV Bank Overview (Section 8.3.4), select the UV lamp that needs to be overridden.

2. Input New Hours ⟶ Push ACCEPT⟶CLOSE.

8.3.4.8 Enable / Disable Individual UV Lamp

1. From the Lamp Driver Detail Screen (Figure 34), select either ENABLED or DISABLED button.

Note: *Only one UV Lamp per UV Bank can be disabled at one time.*

2. If Lamp was previously:

a. *ENABLED* - Select DISABLE⟶CLOSE.

Notes: *1) Only one UV Lamp per UV Bank can be disabled at one time.*

2) A Lamp cool down timer will initiate if disable function was successful.

b. *DISABLED* - Select ENABLE⟶CLOSE.

Note: *For lamp status definitions (Section 8.3.4.2).*

8.3.4.9 Turn off all UV Lamps in UV Bank

1. From Local - Refer to Section 5.2.2.
2. From Remote - Enable PDC Remote Control (Section 8.2.1) → At the HMI → Press the Bank Mode Button (Figure 33, Item 4) → REMOTE OFF.

8.3.4.10 Bank Parameter - Power %

Displays the current UV Bank power level.

8.3.4.11 Bank Parameter - UV Intensity

The UVI value is displayed if the *UVI Option* is enabled in settings.

Button	Description / Action
RESET	Displays when a latched UVI fault is present
REF. SENSOR	Initiates a Reference Sensor Procedure. Refer to DC000601-013.
	Displays when: • Lamp B2 is on with a minor fault(s) or no faults • Bank is in operation • Bank wiping is not in progress • Bank is communicating with SCC

8.3.4.12 Change UV Bank Priority

The Priority button is displayed for systems with more than one UV Bank.

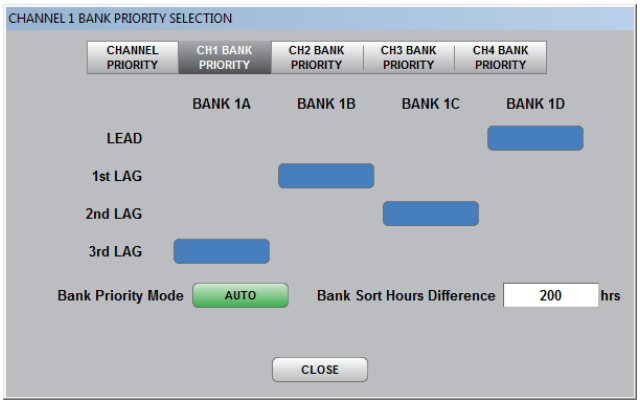

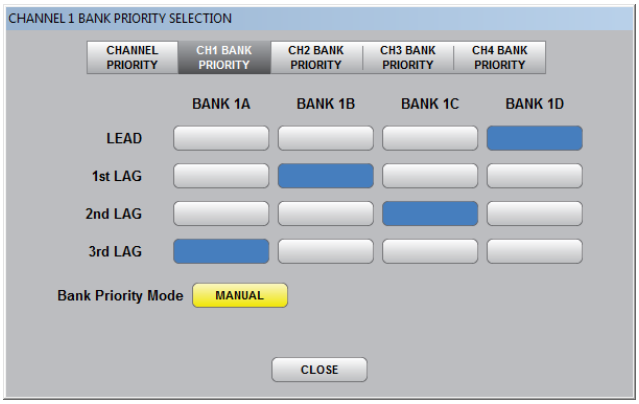

Value	Description
AUTO	Will automatically sort the priority of the UV Bank based on runtime hours, mode, and health.
MANUAL	UV Bank priority is manually assigned.
Bank Sort Hours Difference	UV Banks will automatically sort if the difference in bank lamp hours between two UV Banks (within the same UV Channel) exceeds the preset value.

1. Press the bank priority button (Figure 33, Item 7).
2. Press the pushbuttons to set priority. The selection will turn blue which indicates the priority has been assigned.

   Note: *UV Banks must have unique priority assignments. If unique assignments are not selected, a "PRIORITY SELECTIONS ARE NOT UNIQUE" alert will be displayed on the Bank Priority screen.*
3. ACCEPT or CANCEL.

   Note: *ACCEPT and CANCEL pushbuttons appear after a change has been made.*

8.3.4.13 Display and Override Bank Details

The Bank Details Screen allows selected values to be overridden providing that the user is logged in as OP1 or higher.

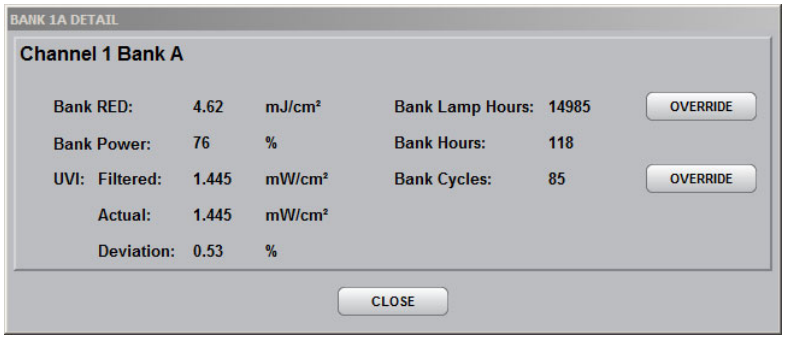

Figure 35 Bank Details

Bank Details Screen Display

Value	Definition	Description / Actions
Bank RED (mJ/cm^2)	Displays the calculated UV Dose	Display only
Bank Power (%)	Displays the calculated Bank Power	
UVI Filtered (mW/cm^2)	Displays the UV Intensity used in the dose calculation	
UVI Actual (mW/cm^2)	Displays the UV Intensity measured by the sensor	
Deviation (%)	Displays the difference between the expected UV Intensity and the measured UV Intensity	
Bank Lamp Hours	Displays the lamp hours in the UV Bank	Override permitted
Bank Hours	Displays UV Bank runtime	Display only
Bank Cycles	Displays the number of times the UV Bank has turned ON	Override permitted

Bank Lamp Hours Override

1. Bank Overview Screen ⟶ BANK DETAILS.
2. Bank Lamp Hours ⟶ OVERRIDE (Figure 35)
3. Input Lamp Hours ⟶ ACCEPT
4. Lamp Hours Confirmation Pop-up ⟶ YES / NO ⟶CLOSE

Bank Cycles Override

1. Bank Overview Screen ⟶ BANK DETAILS.
2. Bank Cycles ⟶ OVERRIDE (Figure 35)
3. Input Bank Cycles ⟶ ACCEPT ⟶CLOSE

8.3.5 Wiper Overview Screen

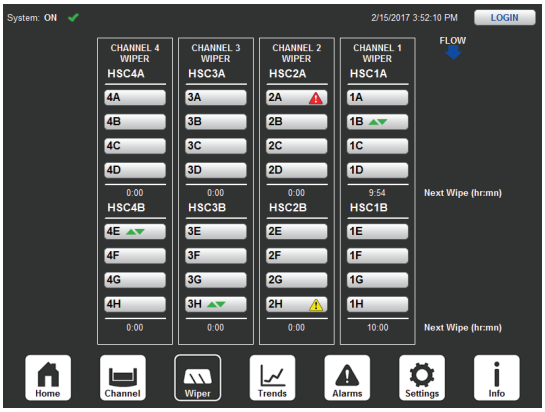

Figure 36 Wiper Overview Screen

Pressing a wiper status button (i.e. 1B) navigates the user to the Wiper Detail Screen for the respective UV Bank (Section 8.3.5.1).

Low Level Alarm and Warning Indicators

In the event of low water conditions, the following text “LOW WATER” will display at the bottom of each channel in yellow (warning) or red (alarm) color.

Wiper Status and Health

Icon	Icon Color	Status	Health
No icon	No icon	Stationary	Healthy
	Green	Moving	
	Yellow		Minor alarm active
	Red		Critical/Major alarm active

WIPE ALL - Visible when there are no conditions that would prevent a wipe of all UV Banks.

Status and health of each wiper in the system are displayed on a push-button.

The time remaining until the next auto wipe procedure is displayed for each UV channel.

8.3.5.1 Wiper Detail Screen

Displays information related to the current selected wiper.

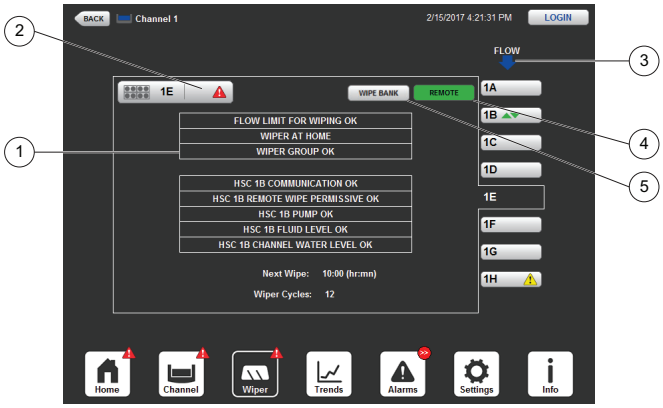

Figure 37 Wiper Detail Screen

1	Wiper Event Status and Alarms	**4**	Wiper Mode
2	UV Bank Status & Health (Quick Switch Button)	**5**	Manual Wipe
3	Flow Direction		

Wiper Mode

The Wiper Mode is determined by the physical HSC switch positions (Figure 37). For HSC local mode (Section 8.1.3.2) .

Icon	Icon Color	Description / Action
LOCAL OFF	Yellow	HSC wiper group is set to “OFF”.
LOCAL RETRACT		HSC wiper group is set to “LOC” and cylinder is retracting.
LOCAL EXT		HSC wiper group is set to “LOC” and cylinder is extending.
LOCAL SEQ		HSC wiper group is set to “LOC” and a sequence wiping is on.
IN LIFT		HSC is set to lift mode.
REMOTE	Green	HSC wiper group is set to wipe and Remote mode.

UV Bank Status and Health (Quick Switch)

A *Quick Switch* push-button contains the status and health information of the wiper at current UV Bank (Wiper Status and Health).

Icon	Icon Color	Status	Health
No icon	No icon	UV Bank is off	Healthy
	Black	UV Bank is in Warm-up	
		UV Bank is Timing off	
ON	Green	UV Bank is in Operation.	
	Yellow		Unhealthy with minor alarm(s) active
	Red		Unhealthy with critical/major alarm(s) active

Wiper Event Status and Alarms

Refer to Section 10 for wiper event status and alarm listings.

Manual Remote Wipe

1. Press WIPE BANK.

   Note: *The function is only available when there is no wiping action or alarms on any bank in the same HSC.*

8.3.6 Trending Screen Overview

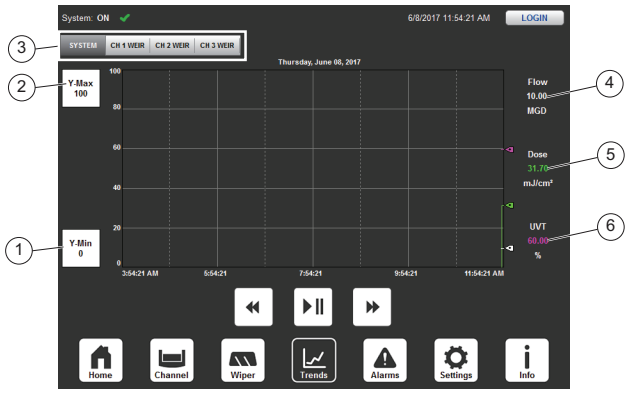

Figure 38 Trend - System With Weir

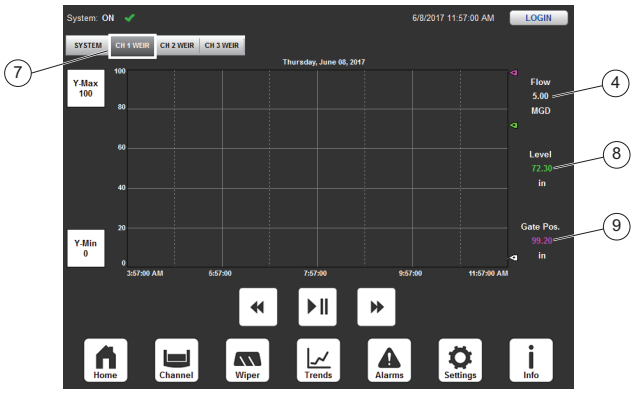

Figure 39 Trend - Weir

1	Y-Min Button	**6**	UVT Value
2	Y-Max Button	**7**	Weir Trend Button Selected
3	Navigation Bar (Toggle between System Trends and Weir Gate Trends)*	**8**	Level Value
4	Flow Value	**9**	Gate Position Value
5	Dose Value		

*Navigation Bar is only displayed when a weir gates are present and controlled by Trojan. Each UV Channel with a weir gate will have a Trend Screen

8.3.6.1 Change Scale of Trending Plot

1. Press the Y-Min ⟶Input the required value⟶ ENTER symbol.
2. Press the Y-Max ⟶Input the required value⟶ ENTER symbol.

8.3.7 Alarm Screen Overview

Alarm Banner

A red alarm banner appears at the top of the screen when an incoming alarm occurs. The alarm banner stays open until the user closes the window.

Figure 40 Alarm Banner

Active Alarms

The *Active Alarms* tab displays the alarms that are active in the system.

Alarm History

The *Alarm History* tab displays all the alarms that have occurred in the system with a date/time stamp.

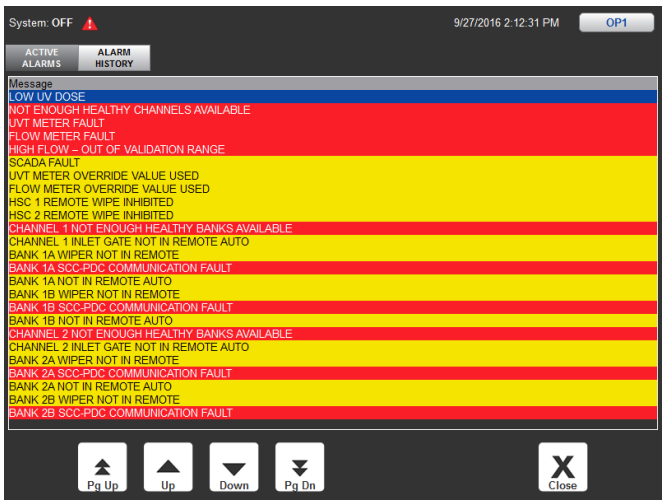

Figure 41 Active Alarms

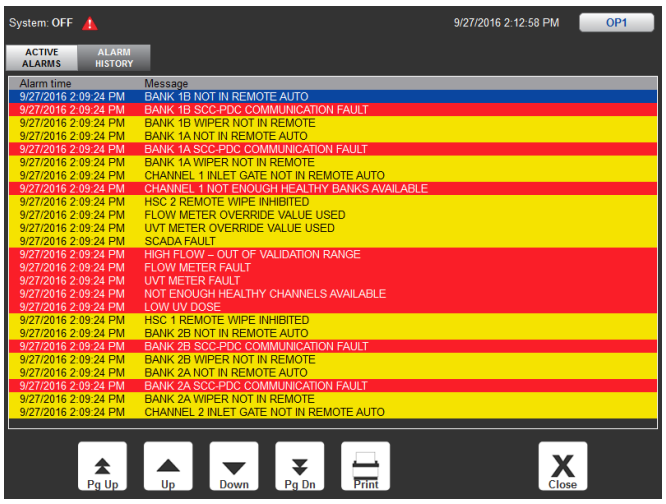

Figure 42 Alarms History

8.3.7.1 Alarm Color Code

Alarm Color	Description
Yellow	Minor Alarm
Red	Critical / Major Alarm
Blue	Selected Alarm

8.3.8 Settings

The user must be logged in at OP1 level or higher to access the Settings Screens. Press the white text boxes to enter new setting values or to pop-up setting options.

8.3.8.1 General Settings

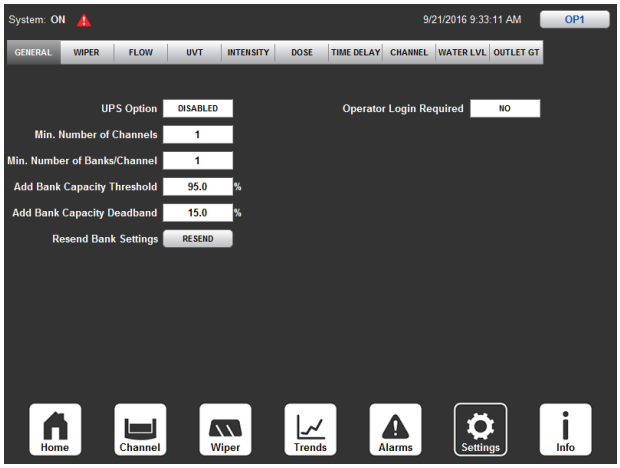

Figure 43 General Settings

Parameter	Units	Definition
UPS Option	Enabled / Disabled	Enabled if a UPS is available, disabled if no UPS is available.
Min. Number of Channels	Whole Number	The minimum number channels requested to run in automatic.
Min. Number of Banks/Channel	Whole Number	The minimum number banks requested to run in automatic.
Add Bank Capacity Threshold	%	A user adjustable “Add Capacity Threshold” (default 95%) will be applied to the calculation so that additional UV Banks will be required once the % Capacity threshold has been reached.”
Add Bank Capacity Deadband	%	A user adjustable “Add Capacity Threshold” (default 5%) will be applied to the calculation when reducing the required number UV Banks per channel, once the (Add Bank Capacity Threshold - Add Bank Capacity Deadband) it has been reached.”
Operator Login Required	Yes / No (default No)	A user adjustable setting to specify if security login is required.
Resend Bank Settings	RESEND	Manually resend UV Bank settings to each BCB.

8.3.8.2 Wiper UV Bank Settings

Figure 44 Wiper UV Bank Settings

Parameter	Units	Definition
Cycle Time	Hours	Set the frequency for wiper cycles.
Max Travel Time	Seconds	The maximum allowable wiper travel time, if exceeded an alarm will be triggered.
Min Travel Time	Seconds	The minimum allowable wiper travel time, if wipe is completed prior to this time, a wiper jammed fault will be triggered.

8.3.8.3 Flow Settings

Figure 45 Flow Settings

Parameter	Units	Definition
Flow Units	m^3/hr, m^3/day, GPM, L/s, MGD	A user adjustable setting for displayed flow units.
Flow Meter Full Scale	Flow Units	Maximum scale (20mA) calibration value used to measure the flow through the UV system.
Flow Default Value	Flow Units	The flow value that is used for auto pacing during designated fault conditions.
Low Flow Alarm Setpoint	Flow Units	Set the level to initiate a low flow alarm timer.
Low Flow Alarm Delay	Minutes	Setpoint for the low flow alarm timer.

8.3.8.4 UVT Settings

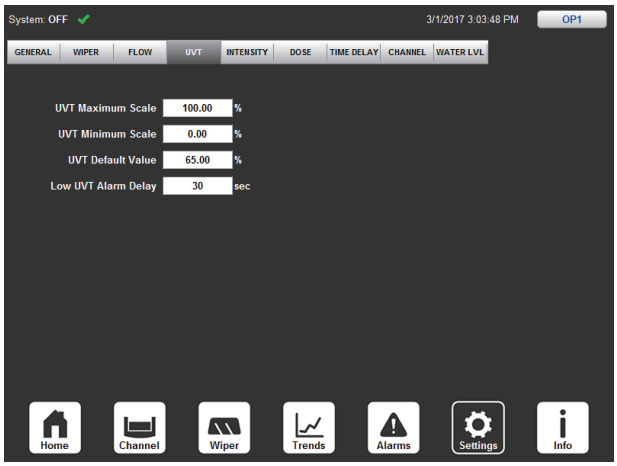

Figure 46 UVT Settings

Parameter	Units	Definition
UVT Maximum Scale	%	Maximum scale (20mA) calibration value used to measure the UVT in the UV system.
UVT Minimum Scale	%	Minimum scale (4mA) calibration value used to measure the UVT in the UV system.
UVT Default Value	%	Full scale calibration value for the UVT signal used for auto pacing if there is a UVT signal fault.
Low UVT Alarm Delay	Seconds	Set the low UVT alarm time delay

8.3.8.5 Intensity Settings

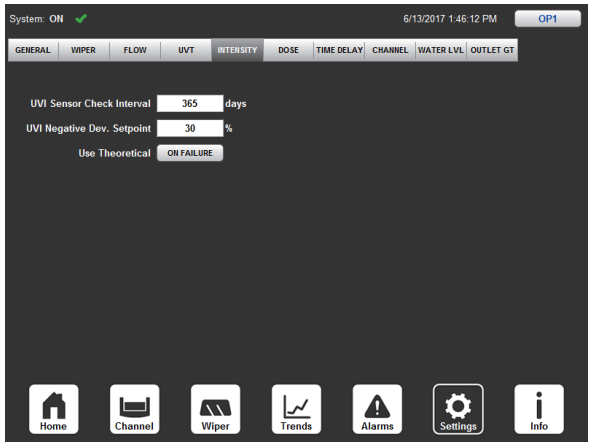

Figure 47 Intensity Settings

Parameter	Units	Definition
UVI Sensor Check Interval	Days	Recommended time between reference sensor checks.
UVI Negative Deviation Setpoint	%	A user adjustable value for the allowable percentage below the calculated UVI expected value.
Use Theoretical	Never	Only use the real sensor value for dose pacing. If the sensor fails that bank will be unhealthy and rotated out if another bank is available.
	On Failure	If the analog signal of the sensor fails, use the theoretical for dose pacing. Sensor alarms will be treated as minor.
	Always	Always use the theoretical value for dose pacing. Sensor alarms will be treated as minor and will only be used for troubleshooting and maintenance purposes.

8.3.8.6 Dose Settings

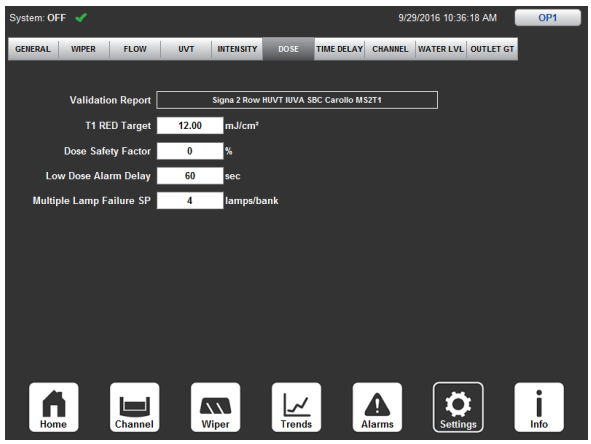

Figure 48 Dose Settings

Parameter	Units	Definition
Validation Report	---	Displays the selected dose validation report.
RED Target	mJ/cm^2	Determines the set point for UV dose control of the auto pacing routine. The auto pacing routine will modulate UV bank power level and bring UV banks and channel in and out of operation as required to maintain this set point.
Dose Safety Factor	%	Allowed additional dose each UV Bank will target above the required RED Target.
Low Dose Alarm Delay	Seconds	The set time for a low dose event to correct before an alarm is triggered.
Multiple Lamp Failure SP	Lamps/Bank	The number of lamp failures in a UV Bank required to trigger a multiple lamp failure alarm.

8.3.8.7 Time Delay

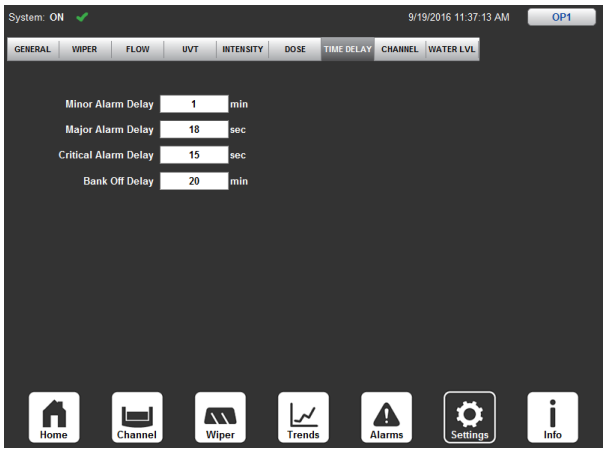

Figure 49 Time Delay

Parameter	Units	Definition
Minor Alarm Delay	Minutes	Time delay for minor alarms.
Major Alarm Delay	Seconds	Time delay for major alarms.
Critical Alarm Delay	Seconds	Time delay for critical alarms.
Bank Off Delay	Minutes	Minimizes UV bank on/off cycling. Determines the amount of time that the auto pacing routine must call for a UV bank to turn off before it will de-energize. While this timer is running, a UV bank will be operated at minimum power.

8.3.8.8 Channel Settings

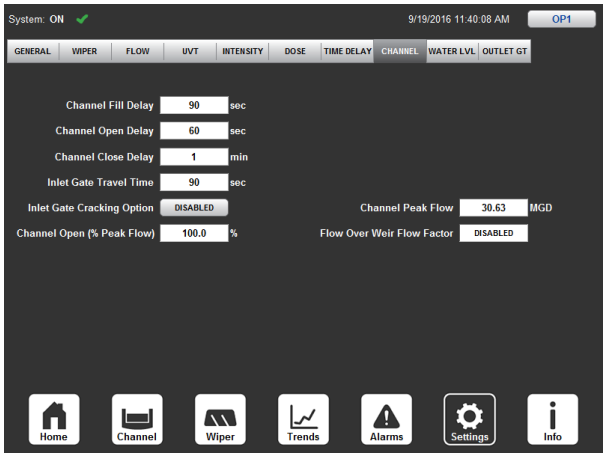

Figure 50 Channel Settings

Parameter	Units	Definition
Channel Fill Delay	Seconds	Time allowed for an empty channel to fill to the level switch before a Channel Low Level alarm is triggered. Channels that operate in the low level alarm condition are not considered “healthy” and will not be available to the auto pacing routine.
Channel Open Delay	Seconds	Time delay before a channel will remain closed to allow for the UV Banks to warm up, providing there is not a low water level event.
Channel Close Delay	Minutes	Time delay before a channel that is no longer required is closed and taken out of operation.
Inlet Gate Travel Time	Seconds	The maximum time required for the inlet slide gate to complete its travel from a fully open or closed position. This set point is used to determine how long to wait when a gate is commanded to move before checking for alarm conditions.
Inlet Gate Cracking Option	Enabled / Disabled	Allows for controlled filling of the UV Channel.

Parameter	Units	Definition
Channel Open (% Peak Flow)	%	The percentage of the channel peak flow setpoint that will trigger additional channels to be brought online. - multichannel or inlet gates must be present.
Channel x Peak Flow	GPM	Designed peak flow for each UV Channel
Flow Over Weir Flow Factor	Enabled / Disabled	Enables the PLC to apply a flow factor based on the channel flow over the weirs; used to calculate the flow through each channel. Available to systems configured with automatic outlet weir gates.

8.3.8.9 Water Level Settings

Figure 51 Water Level Settings

Parameter	Units	Definition
Low Water Shutdown Delay	Minutes	The time delay between a low water level warning and a low water level alarm that will shut down the UV Bank. A low water level warning occurs after the minor delay time.
Water Lvl Units	---	Displays the preferred units for water level.
ChX Water Level Max Scale	cm, in	Maximum scaled (20mA) calibration value used to measure the level in the UV channel.

8.3.8.10 Outlet Gate Settings

The Outlet Gate Settings screen is displayed for systems configured with automatic outlet gates.

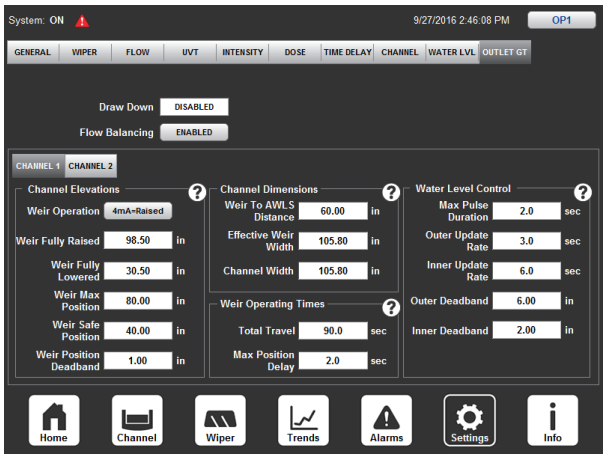

Figure 52 Outlet Gate

Parameter	Units	Definition
Flow Balancing	Enabled / Disabled	A system that is configured to flow balance will compensate both for imperfections within civil works as well as flow tendencies toward one channel. These effects are able to be compensated for by calculating a dynamic offset of the water level set-point in each channel
Flow Balancing Gain	---	Gain value used to increase or decrease the effect of the calculated flow balancing compensation factor used to dynamically offset the water level set-point in each channel.
Weir Operation	4/20mA-Raised	The Weir Position analog signal associated with the weir in the fully raised position.
Weir Fully Raised	Inches	The elevation of the weir when fully raised relative to the channel floor beneath the analog water level sensor (same channel).
Weir Fully Lowered	Inches	The elevation of the weir when fully lowered relative to the channel floor beneath the analog water level sensor (same channel).
Weir Max. Position	Inches	Also known as the “Parked” position, this is the elevation of the weir considered to be fully closed, relative to the channel floor beneath the analog water level sensor (same channel).
Weir Safe Position	Inches	The elevation the weir, relative to the channel floor beneath the analog water level sensor (same channel), will be commanded to when a Water Level Signal Fault is active in the channel. This position is configured to prevent flooding in system when water level is unknown.
Weir Position Deadband	Inches	The weir gate position deadband applied when the weir gate is commanded to move to either the Max Position or Safe Position. Once inside this deadband, the weir gate will not be commanded to move.
Weir to AWLS Distance	Inches	The distance from the weir gate that the analog water level sensor has been installed.
Effective Weir Length	Inches	The effective weir gate width is the measured weir gate width less the diameter of each weir gate stem.
Channel Width	Inches	The width of the UV Channel at the analog water level sensor.
Total Travel	Seconds	The time taken for the weir gate to travel from the Fully Raised position to the Fully Lowered position.
Max. Position Delay	Seconds	The time delay from when the inlet gate starts closing to when the weir gate is commanded to Max position.
Max. Pulse Duration	Seconds	The maximum allowable weir pulse time when raising or lowering the outlet weir gate.
Outer Update Rate	Seconds	If the measured water level error is greater than the “Inner DB” limit and less than or equal to the “Upper DB” limit, the weir gate will be commanded to move for a calculated pulse duration and then wait for the “Update Outer” time period in order to measure the resultant water level effect.
Inner Update Rate	Seconds	If the measured water level error is outside of the Lower/Upper deadband range but is less than or equal to the “Inner DB” limit, the weir gate will be commanded to move for a calculated pulse duration and then wait for the “Update Inner” time period in order to measure the resultant water level effect.
Outer Deadband	Inches	If the water level error is greater than the “Outer DB” limit, the weir gate will move continuously until the measured water level error is less than the “Outer DB” limit at which time the gate will be commanded to move for a calculated pulse duration as described above.
Inner Deadband	Inches	

8.3.9 Information

Information is displayed on the Information tabs.

General

The General Information tab is used to display general Controller and project information. This information includes:

- Controller Data
- Firmware
- Status
- Mode
- Scan Time
- Memory Usage
- Project Number

Revision

The Revision Information tab displays the firmware revision levels of each controller board (BCBs, HSCs), the Controller and HMI.

The format for the revision levels are:

Controller/HMI: Product ID: Application ID: Major Revision: Minor Revision: Site Revision

BCBs/HSCs: Product ID: Application ID: Major Revision: Minor Revision

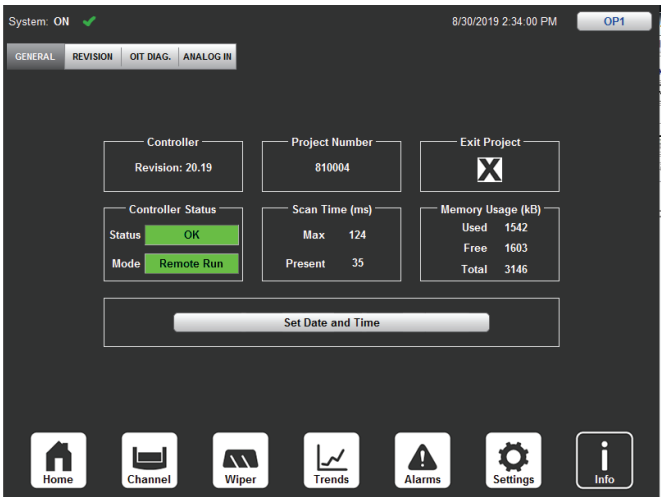

Figure 53 Info - General - OP1

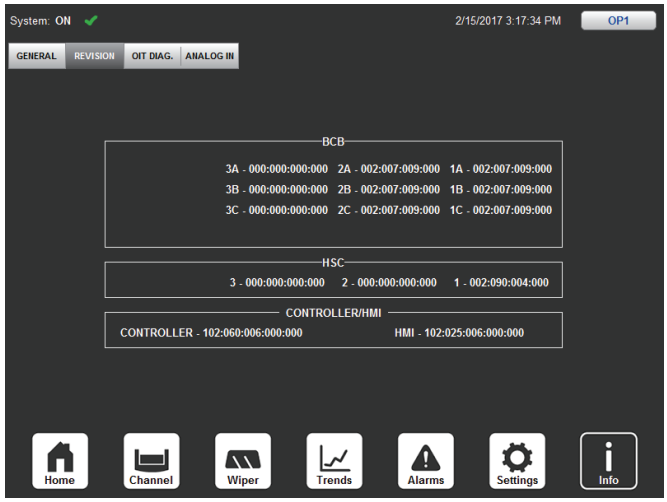

Figure 55 Revision

Figure 54 Analog Input

Figure 56 Flow Balancing

Set Date and Time

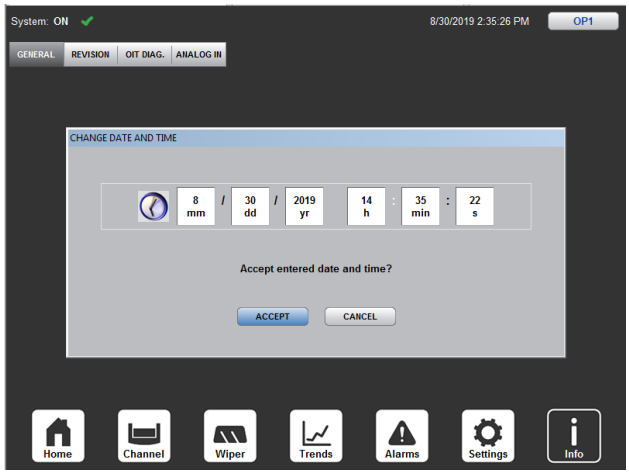

Figure 57 Date and Time Pop-Up

1. Info Screen ⟶ Select the 'GENERAL' tab (Figure 53) ⟶ Select 'Set Date and Time' to open the Date and Time Pop-up Screen (Figure 57).
2. Enter new Date and Time as required ⟶ Select Accept to save the changes.

OIT Diagnostics (Visible on Allen Bradley HMI only)

The OIT Diagnostics screen is used to provide a listing of diagnostic runtime data from the HMI. This will assist the user with troubleshooting the HMI.

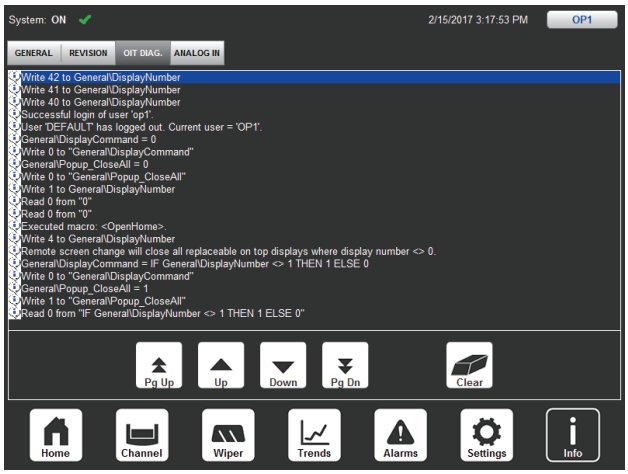

Figure 58 OIT Diagnostics

Service Information

Figure 59 Service Information (Allen Bradley)

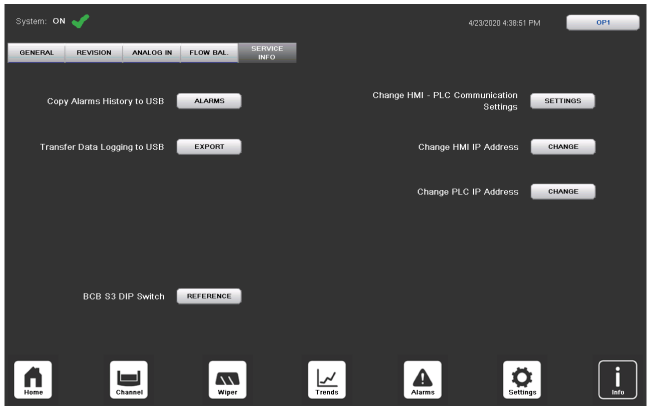

Figure 60 Service Information (Beijer)

Service Information - Change PLC IP Address

To change the PLC IP Address:

1. Login as OP1 or higher.
2. At the ‘Change PLC IP Address’ field, press ‘Change’.
3. Upon entering the screen, the PLC will initiate ‘Read Ethernet Settings’.
4. Enter a new address for any of the following:
   a. PLC IP
   b. Subnet
   c. Gateway
5. Press ‘Accept’ to apply the changes or ‘Close’ to cancel the changes or leave the page.

Notes: *1) If there is something wrong with the Write Message in the PLC (i.e. incorrect path, configuration) or if an invalid IP (or an incorrect Subnet vs Gateway) a "Write Error or Invalid Configuration" message will be displayed. The message will clear when a new and successful entry is made or if the user leaves and then returns to the page.*

2) If there is something wrong with the Read Message in the PLC (i.e. incorrect path, configuration) a ‘Read Error’ message will be displayed. This error message will require an edit in the PLC program.

Service Information - BCB S3 DIP Switch

This is a reference screen to help troubleshoot the Bank x BCB DIP Switch Mismatch Alarm.

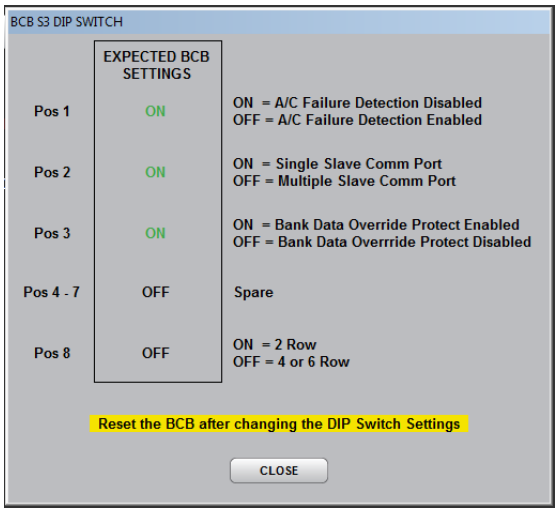

Figure 61 BCB S3 DIP Switch

To view the BCB S3 DIP Switch Settings:

1. Login as OP1 or higher.
2. At the BCB S3 DIP Switch field, press ‘Reference’ to open the BCB S3 DIP Switch pop-up screen (Figure 61).
3. If there is a **BCB S3 DIP Switch Mismatch Alarm** active, verify that the S3 DIP Switch settings on the BCB (located in the Power Distribution Center) match the (ON / OFF) settings shown on this screen.

⚠ DANGER

Obey all warning and caution statements. Refer to Section 2.

Read and understand this Operation and Maintenance Manual before operating this equipment. Read all user documentation before performing operations, inspections, repair, or maintenance on this equipment.

Only competent personnel should undertake operation, repairs, maintenance, or servicing of equipment described in this section of the manual. If you do not understand the information or procedure explanations in this manual, STOP and contact your Service Provider for assistance.

9.1 Tools and Materials

Symbols	Description	Symbols	Description
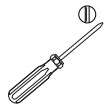	Flat Screwdriver		Lint-free Cloth (Kimwipes®)
	Phillips Screwdriver		Clean Water
	Spray Bottle		Hand Pump Hose Assembly
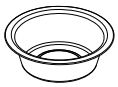	Shallow Bowl		Bucket
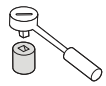	Socket Wrench and Socket	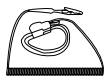	ESD Wrist Strap
	Strap Wrench		Mild Soap and Water Solution
	Heat Gun		Crimping Tool
	Adjustable Wrench	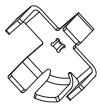	Canister Body Tool
	Funnel		Hydraulic Fluid
	ActiClean™ Gel (or approved cleaning solution as per Table 7)		Pliers - Needlenose
	Water Hose		Anti-Seize
	Hex Key		Wrench - Combination

Symbols	Description	Symbols	Description
	Food Grade Grease	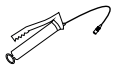	Grease Gun

9.2 Maintenance Schedule

Table 5 shows the maintenance schedule for the UV system.

Important Note: *Frequency and maintenance schedule may vary depending on water quality.*

Table 5 Maintenance Schedule

System component	Task	Monthly	Semi-Annually	Annually	Every 2 years	On removal	As necessary
UV Channel	Clean the UV channel around the UV system. Perform semi-annually for poor water quality conditions. Lift the UV Banks (Section 8.1.2). From the grating level, use a garden hose or pressure washer to clean the UV Channel.		X				
Water Level Sensor	Inspect the water level sensor(s) rods for debris, algae or damage. Clean the sensor rods as necessary. ***Note:*** *Do once every two weeks for poor water quality conditions.*	X					
HSC	Inspect the Hydraulic System Center (Section 9.8.1).	X					
	Replace the hydraulic fluid in the reservoir (Section 9.8.4).				X		
	Replace the hydraulic fluid filter element (Section 9.8.3).			X[1]			
	Replace hydraulic hose (Section 9.8.5).						X
	Replace the VCI Emitter.				X		
Power Distribution Center	Air filters to be flushed with warm running water with clean side up. If the accumulated dirt is oily, washing in a detergent bath is recommended followed by a warm water wash (Section 9.10.2).						X
	Replace a lamp driver (Section 9.10.1).						X
Lamp Sleeve Wiper	Add grease to the wiping cylinder(s) (Section 9.9.1). ***Note:*** *Grease the wiping cylinders when shutting down for extended periods of time and when starting up after extended periods of time (Section 5).*			X			
	Fill Wiping System (Section 9.7.2).		X				
	Flush Wiping System for seasonal winterization (Section 9.7.3).						X
	Replace the Wiper Seals, O-rings and Bushings (Section 9.7.4.1).				X		X
	Inspect all the wiper components that can be seen. Remove any debris and clean components as necessary.					X	
	Flush and clean entire cleaning system and replace ActiClean Gel (perform at the same time as replacing UV lamps at End of Lamp Life) or every 18 months. Perform annually for poor water quality conditions.						X

Table 5 Maintenance Schedule

System component	Task	Monthly	Semi-Annually	Annually	Every 2 years	On removal	As necessary
UV Bank	Inspect the UV Bank seal when the UV Bank is lifted into the service position. Ensure the seal is clean from debris. Inspect for cracks and ensure it is not damaged or worn.					X[2]	
	Clean UV Bank (Section 9.6.1).						X
	Inspect Floor Support Seals. Replace if damaged or worn (Section 9.6.2).					X	
UV Lamp	Replace a UV lamp. Reset lamp hours (Section 9.3.2). ***Note:*** *Replace the Lamp Plug O-Ring and desiccant pack whenever a UV Lamp is replaced.*						X[3]
Lamp Sleeve	Replace a lamp sleeve (Section 9.4.1).						X
	Clean lamp sleeves manually (Section 9.4.2).						X
Lamp Plug	Inspect the lamp plug O-rings. Ensure the O-ring is not rolled or twisted and fits in the groove. Replace O-ring that is damaged or worn. ***Notes:*** *1) Replace the Lamp Plug O-Ring when a UV Lamp is replaced.* *2) Pinch the O-ring with fingers to remove. Do not use a screwdriver as damage to the O-ring and O-ring groove may occur.*					X	
	Check sockets for corrosion (observed as a white discoloration or patina on the surface of the pin). Manually clean using contact cleaner. Ensure any debris is removed. It is recommended to apply a corrosion preventative compound.					X	
UVI Sensor	Replace the UVI sensor housing sleeve, desiccant pack and seals (Section 9.5.4).			X			
	Clean the UVI sensor housing sleeve with a mild acidic solution (Section 9.5.3).						X
	Replace the UVI Sensor Wiper O-rings and seals.				X		
	Inspect UVI Sensor Wiper O-rings and Fittings. Replace if damaged, worn or brittle (Section 9.5.6).		X			X	
	Inspect UVI Sensor Floor Bushing for damage or wear. Replace if required (Section 9.5.7).					X	

[1] Replace after 50 hours, annually thereafter.

[2] When UV Bank is lifted.

[3] Every 15,000 hours or if UV Lamp has failed.

Table 6 Daily Visual Walk-about Inspection Checklist

System component	Task
SCC	Check Alarm Status screen for new faults and record new alarms
	Check the Alarm History screen to get an overview of past faults
	Check the Overview screen(s) on the user interface to make sure that all the UV banks are in REMOTE AUTO.
ActiClean Cleaning System	Check the Wiper Control screen(s) on the HMI to make sure that all the wiper groups are in REMOTE AUTO.

9.3 UV Lamp

UV lamps contain mercury (Section 2).

9.3.1 Storage Requirements for Used UV Lamps

Put used UV lamps into the replacement UV lamp shipping container, or a similar container. It is preferable that the original packing materials be used where possible, or materials adequate to prevent breakage during storage and transportation.

Boxes of used UV lamps should be labeled as such and stored in a location where the potential for accidental breakage is minimized.

A UV lamp recycler may have specific procedures and UV lamp storage requirements. Consult with a UV lamp recycler to determine all applicable policies.

This component contains Mercury. Dispose according to Local, State, or Federal Laws.

9.3.2 Remove and Install a UV Lamp

Prerequisites:

- Shutdown the UV Bank. Refer to Section 5.2.
- Lockout Tag Out - PDC compartment for the associated UV Bank. Refer to Section 4.
- Wait 10 minutes to allow UV lamps to cool.

Tools:

- Lamp Plug Removal Tool (optional)

Materials:

- UV Lamp (if required)
- Lamp Plug O-Ring (if required)
- Lamp Desiccant Kit (if required)

Notes: *1) Use clean cotton gloves to remove and install the UV Lamp.*
2) Use protective gloves to remove broken UV Lamps.

Procedure:

NOTICE
To prevent damage, precautions must be taken to keep the replacement UV Lamp dry from moisture (i.e. rain, snow, condensation etc.) when installing into the Lamp Sleeve. To prevent damage when installing, make sure that the lamp plug is fully latched.

Remove (without Lamp Plug Removal Tool):

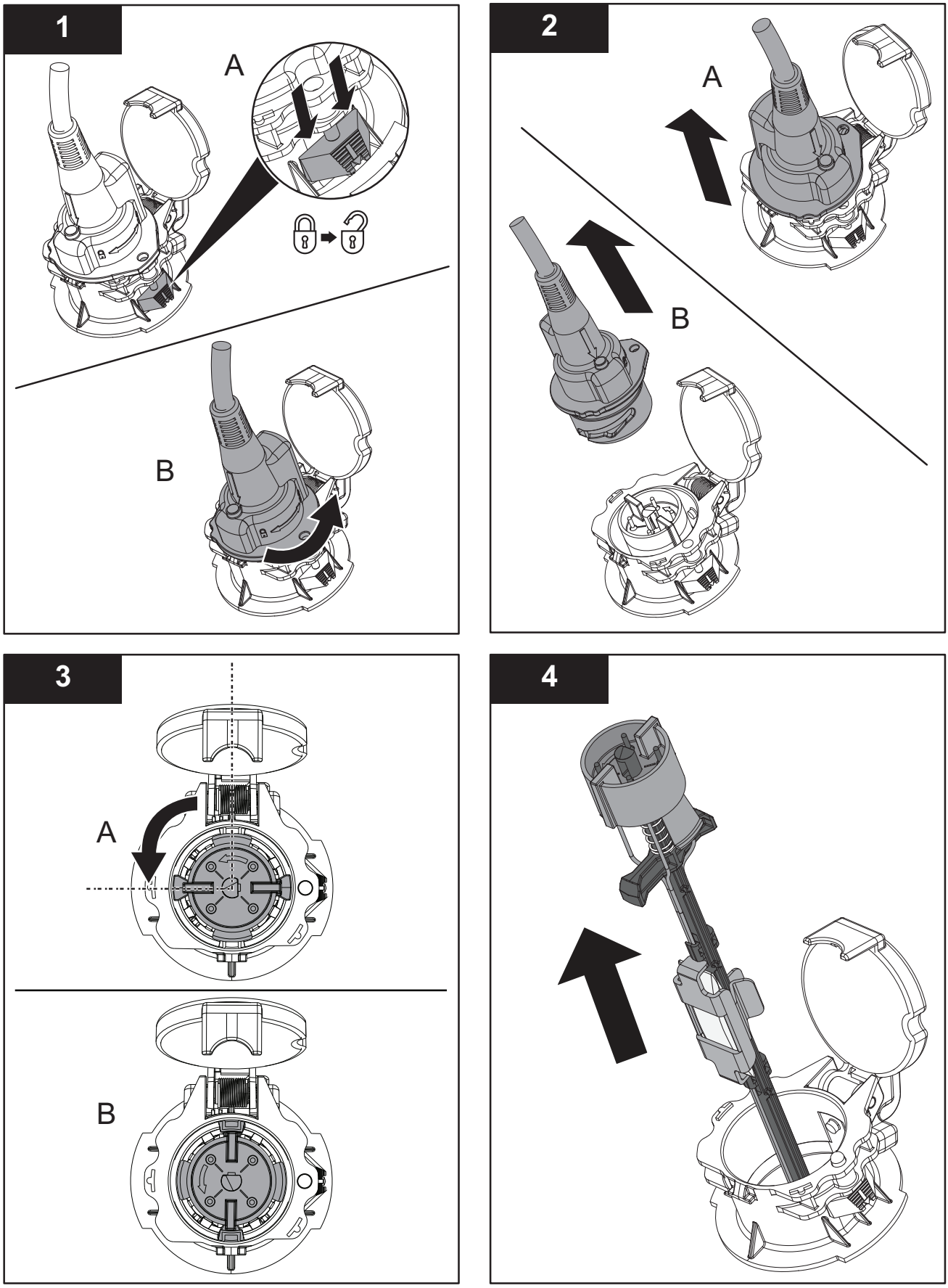

Install (without Lamp Plug Removal Tool):

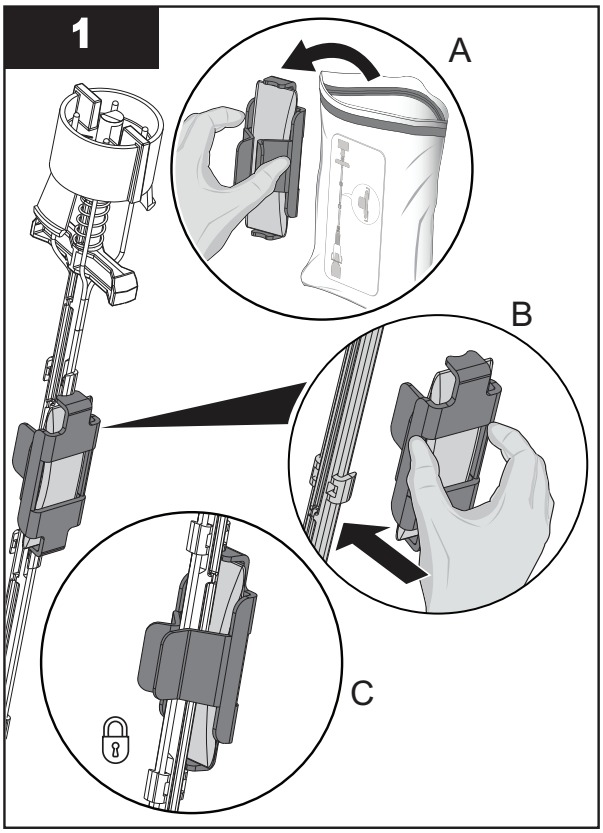

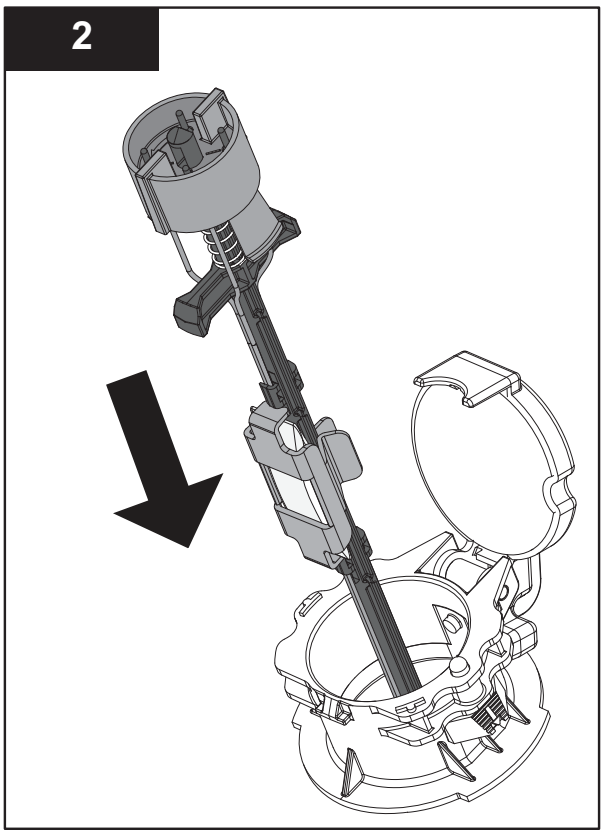

Note: *Install the Desiccant Pack Clip onto the UV Lamp Cross Bar as shown.*

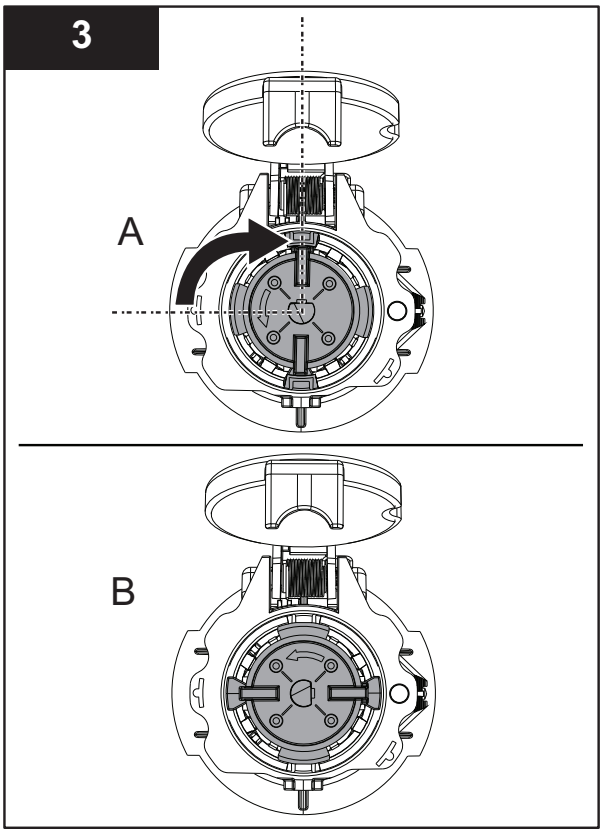

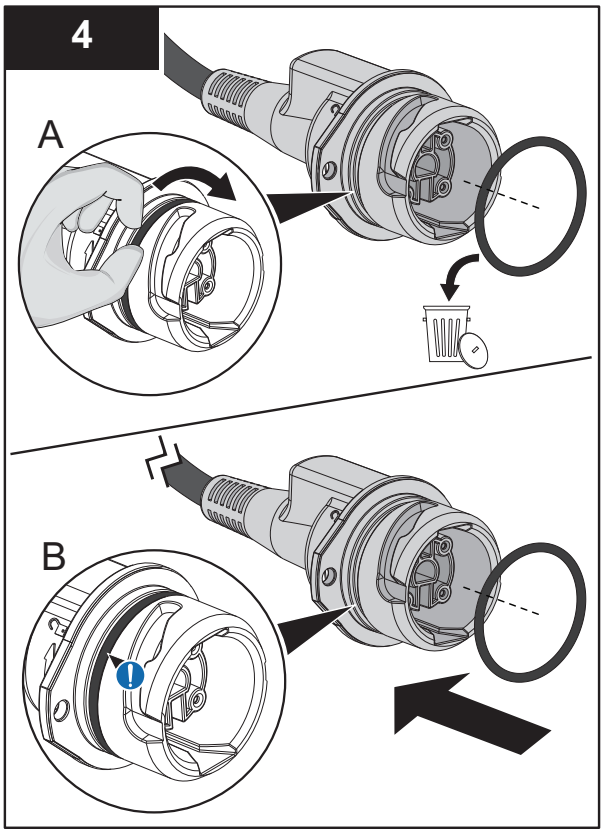

Notes: *1) Replace the Lamp Plug O-Ring when the UV Lamp is replaced.*

2) Use a dry clean lint free cloth to remove dirt and debris from the Lamp Plug and Lamp Plug O-Ring groove.

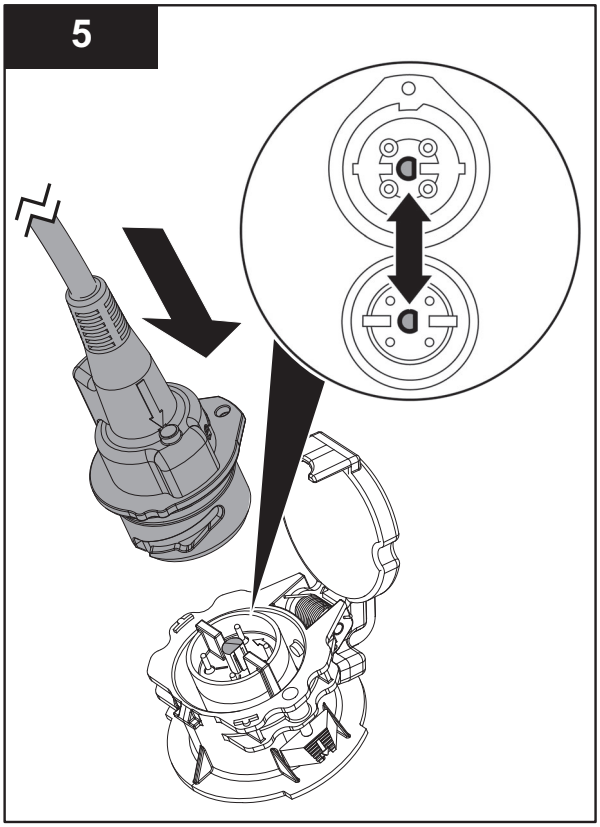

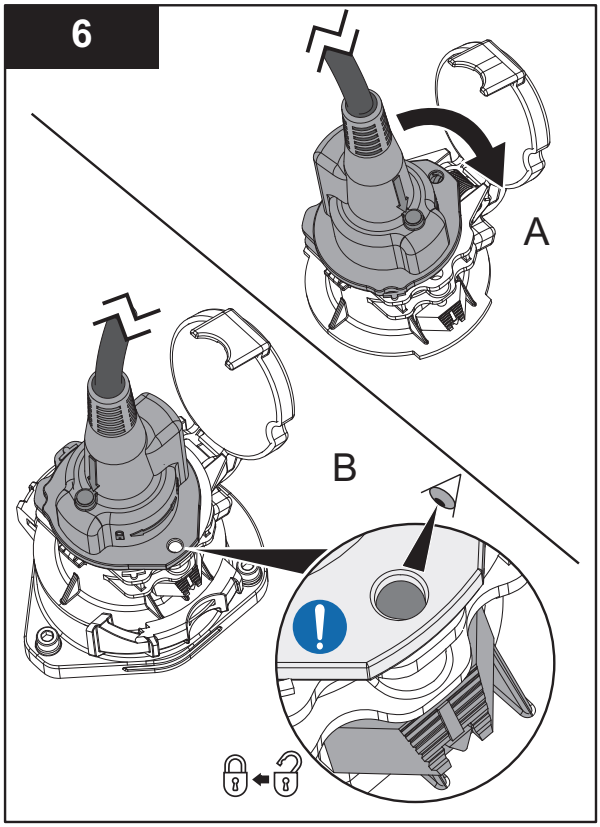

Note: *The locking pin will be visible when the lamp plug is correctly latched.*

7. When installing a new UV Lamp, reset lamp hours (Section 8.3.4.7).

Remove (with Lamp Plug Removal Tool):

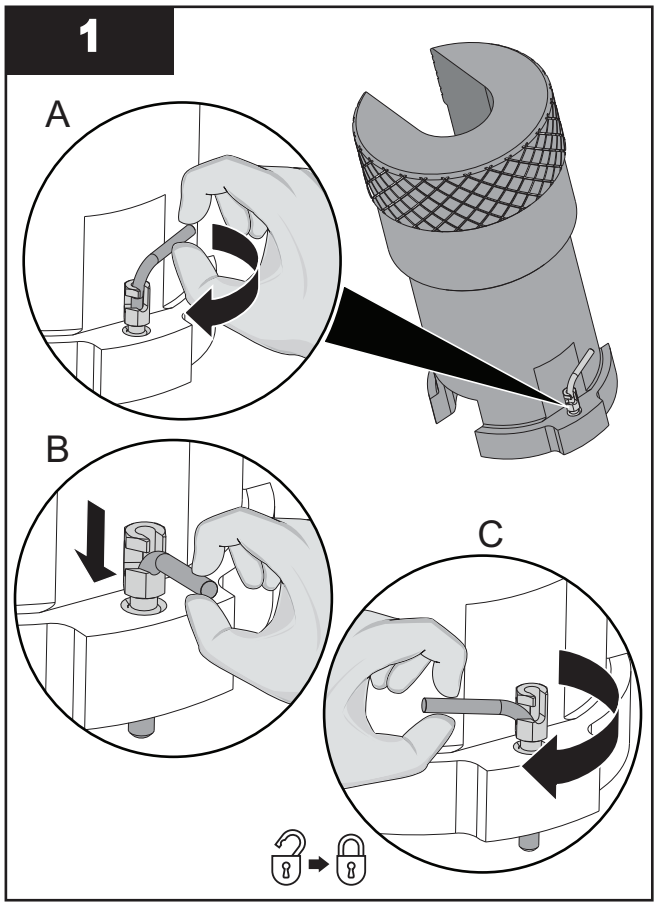

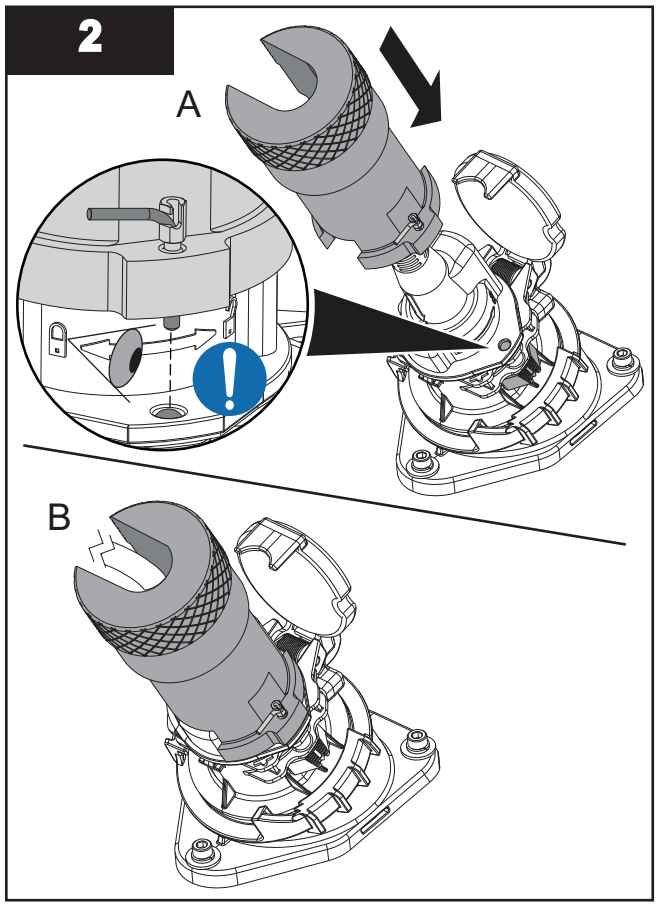

3

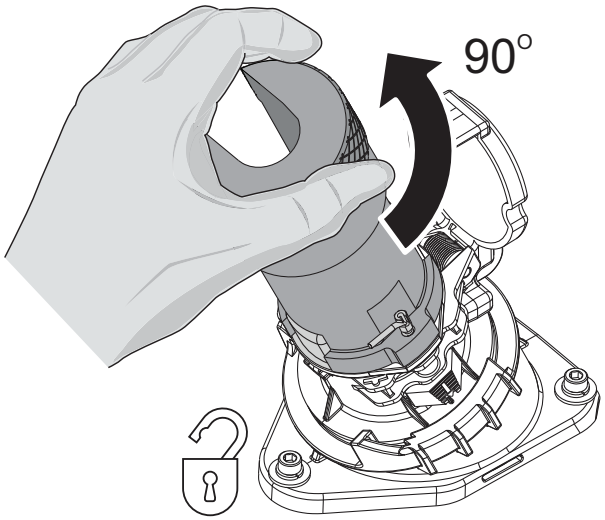

4

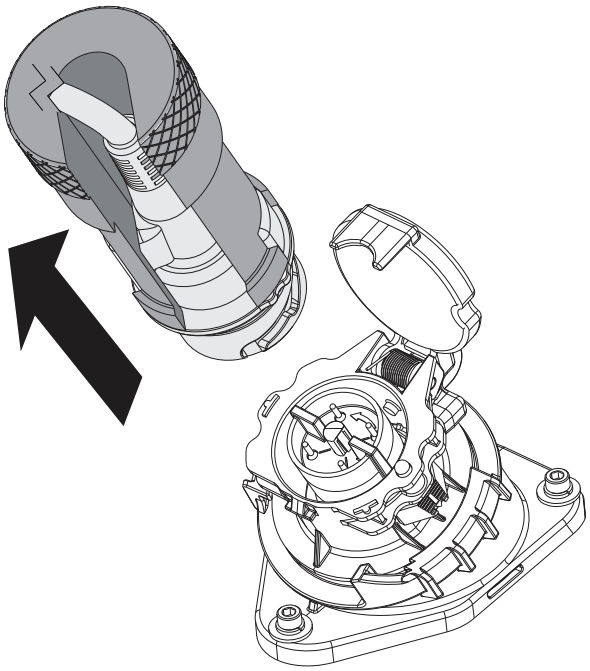

Note: *To prevent damage, DO NOT overturn.*

5

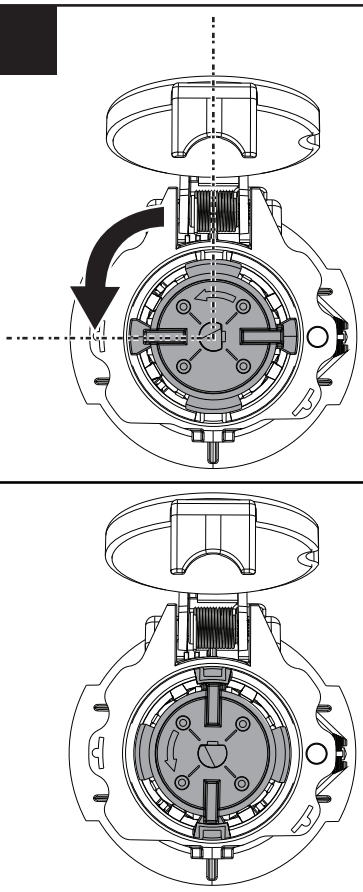

6

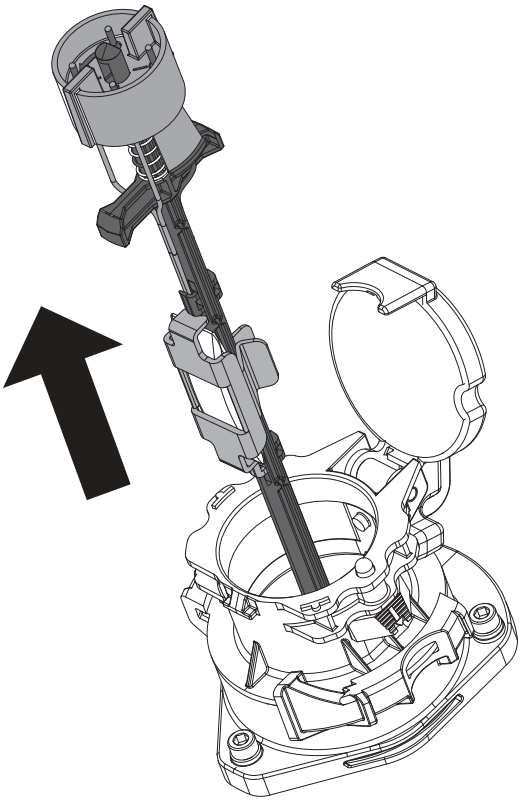

Install (with Lamp Plug Removal Tool):

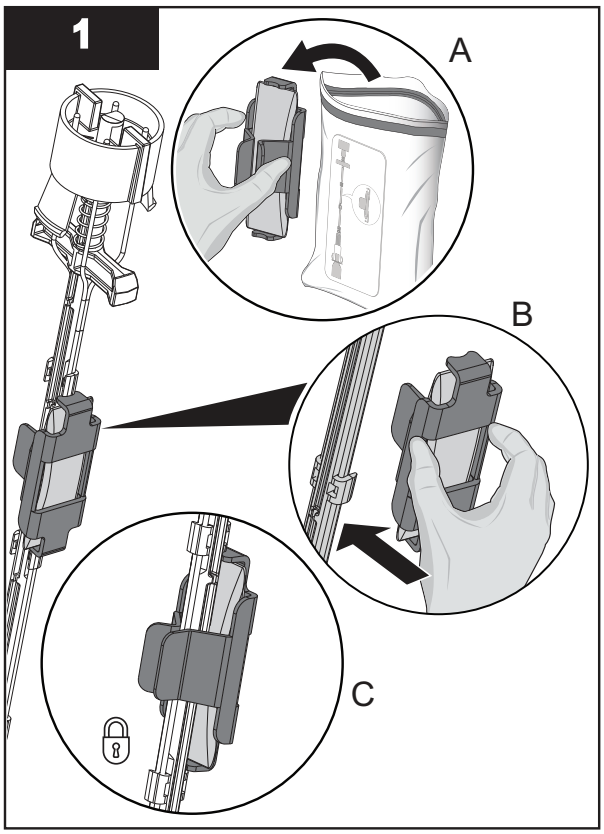

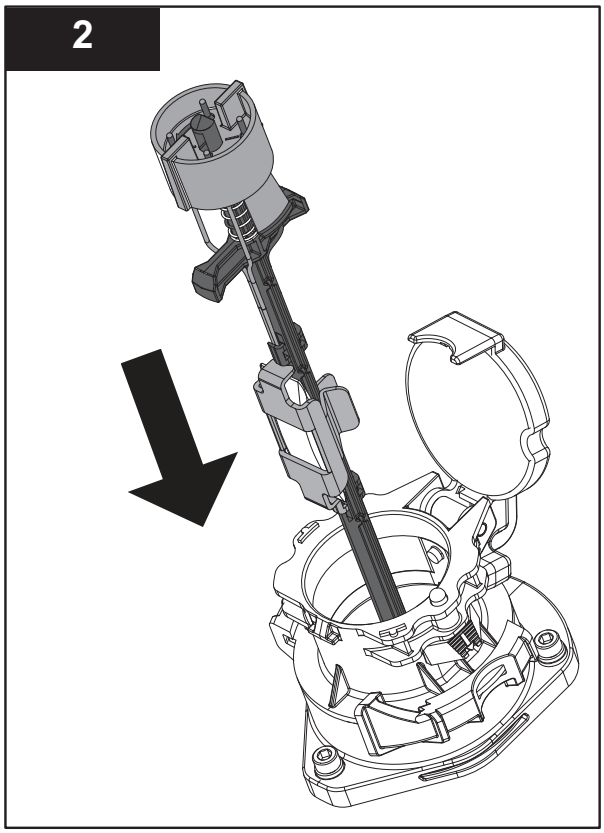

Note: *Install the Desiccant Pack Clip onto the UV Lamp Cross Bar as shown.*

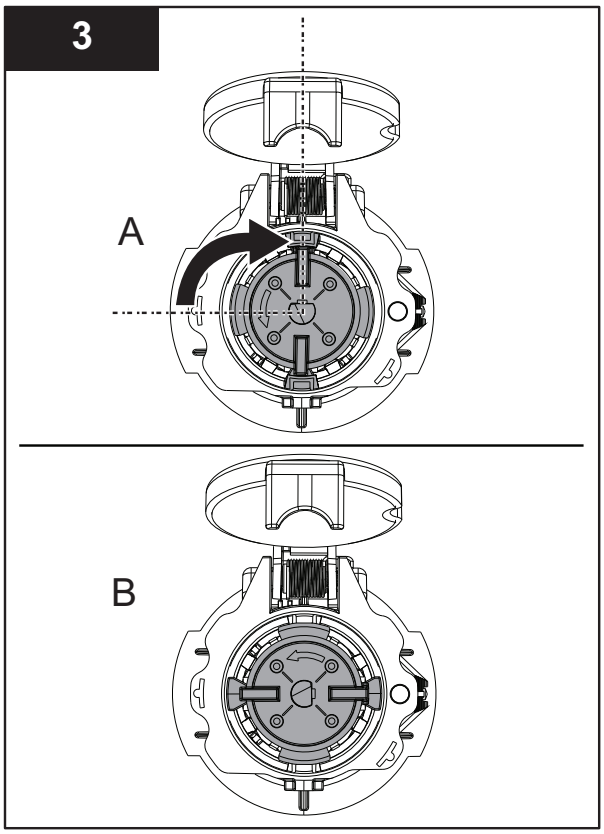

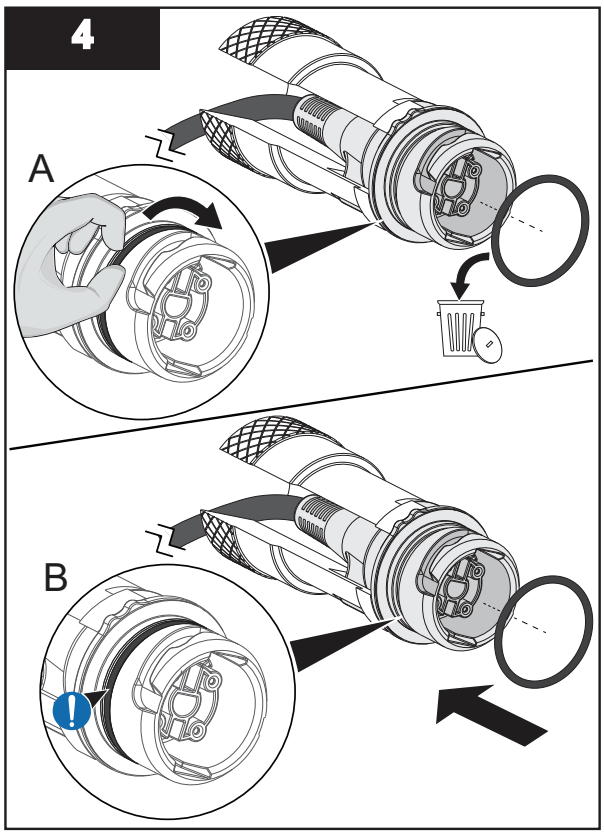

Notes: *1) Replace the Lamp Plug O-Ring when the UV Lamp is replaced.*

2) Use a dry clean lint free cloth to remove dirt and debris from the Lamp Plug and Lamp Plug O-Ring groove.

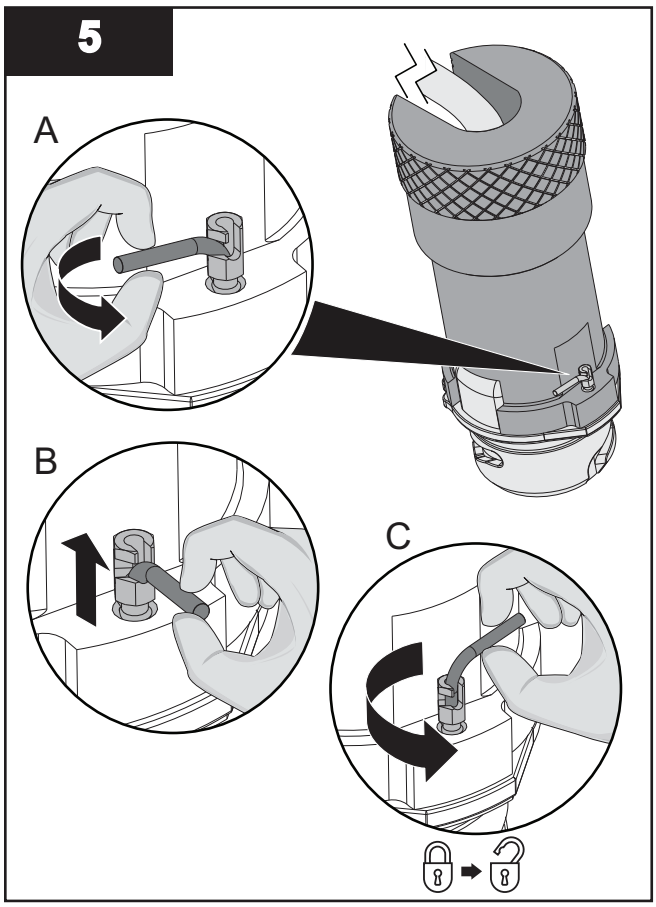

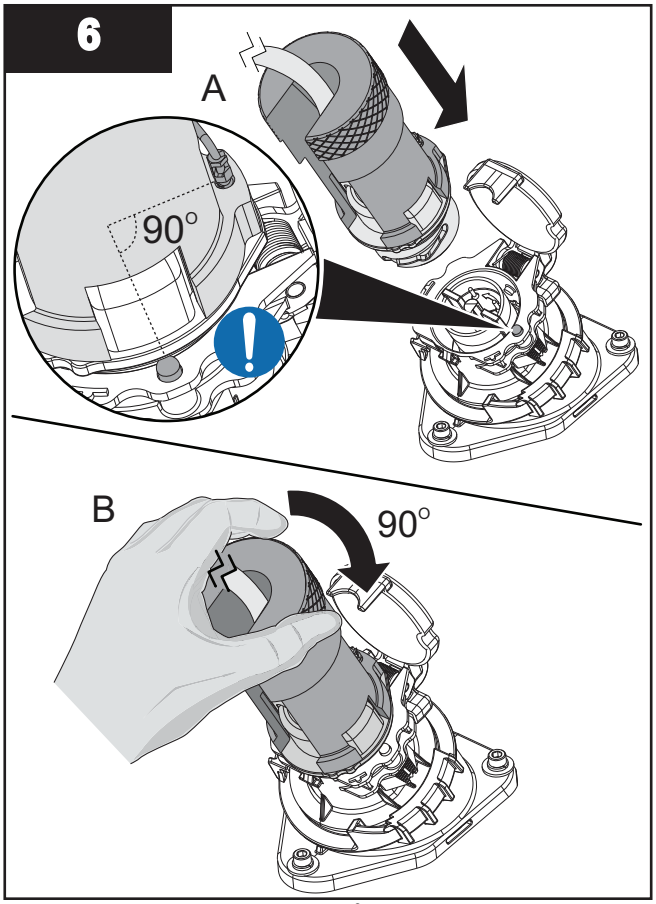

Note: *Align the tool with brass pin 90° Counter-clockwise to lamp pin*

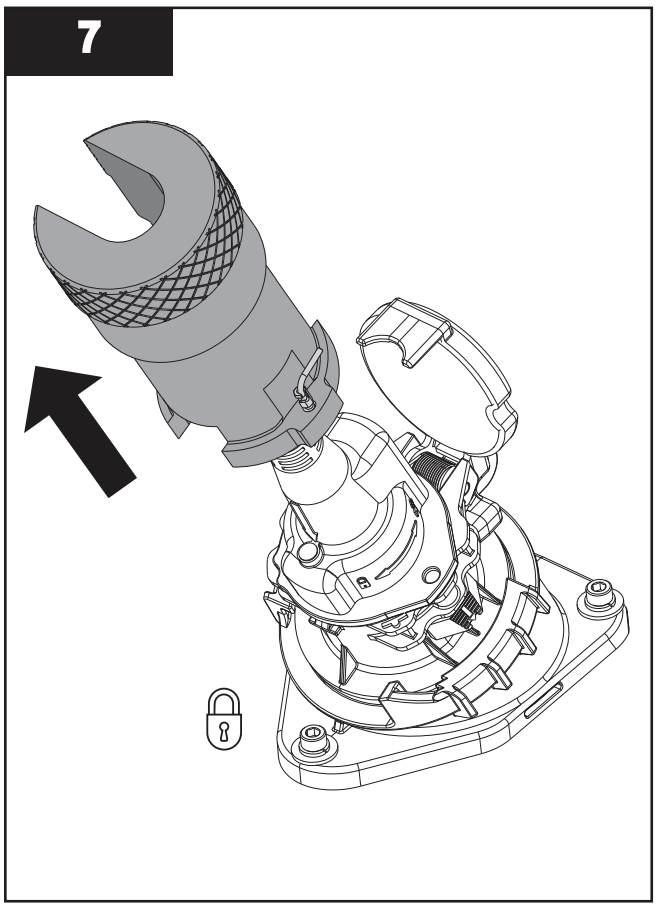

8. When installing a new UV Lamp, reset lamp hours (Section 8.3.4.7).

9.4 Lamp Sleeve

9.4.1 Remove and Install a Lamp Sleeve

Remove a UV lamp sleeve to clean it, replace it or do other maintenance procedures. Replace a UV Lamp sleeve when it is damaged (i.e., scratches, cracks or other physical damage).

Prerequisites:

- Shutdown the UV Bank. Refer to Section 5.2.
- Lift the UV Bank Up - Install the UV Bank locking plates. Refer to Section 8.1.2. Replace grating section(s).
- Move the Wiper to 1/2 way. Refer to Section 8.1.4.
- Lockout Tag Out - HSC and PDC compartment for the associated UV Bank. Refer to Section 4.
- Remove the UV lamp plug only. Refer to illustrated steps 1 and 2 in Section 9.3.2.
- Wait 10 minutes to allow UV lamps to cool.

Notes: *1) UV lamp sleeve cap must be closed when the sleeve is removed. Failure to apply cap could lead to contamination of the UV lamp sleeve and lamp.*

2) UV lamp sleeve can be removed with or without lamp installed.

Materials:

Procedure:

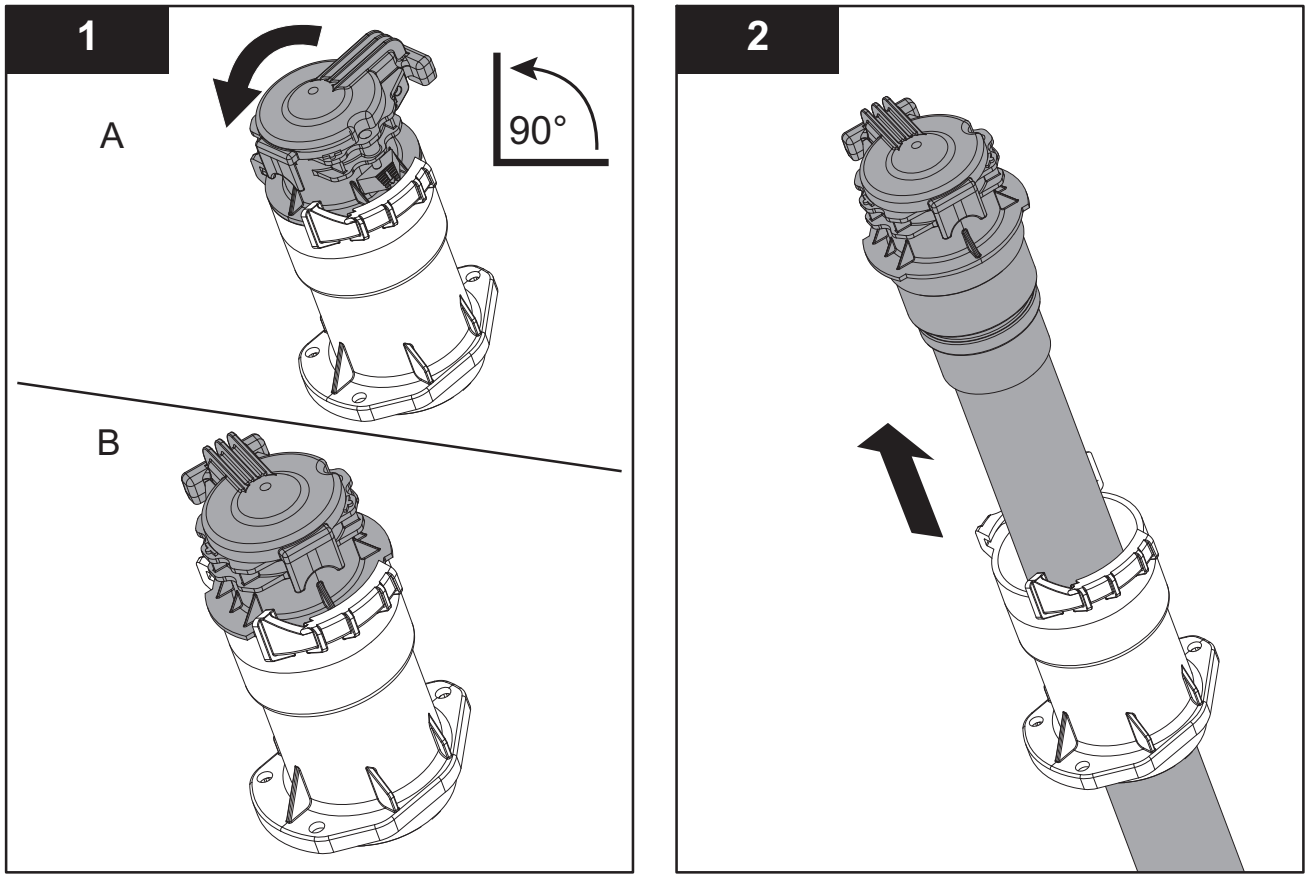

Note: *Spray the sleeve to be removed and installed at the wiper canister with water.*

To install a UV lamp sleeve, assemble in reverse order of disassembly. Refer to Figure 62 for correct lamp sleeve installation orientations.

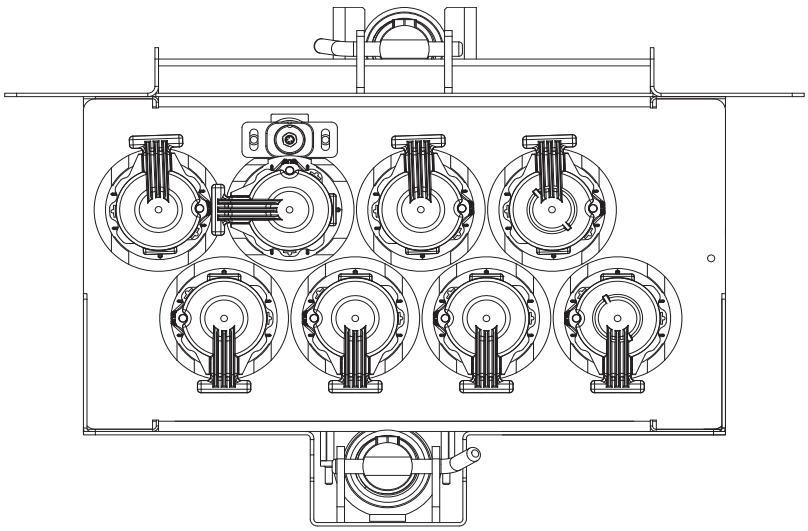

Figure 62 Lamp Sleeve Cover Orientation

Note: *The orientation of the lamp sleeve, adjacent to the UVI Sensor is rotated 90º.*

9.4.2 Clean Lamp Sleeves Manually

NOTICE

Do not use abrasive materials to clean a lamp sleeve. Abrasive materials will scratch and cause damage to the UV lamp sleeve.

Keep water and debris out of the UV lamp sleeves. Moisture can cause build-up in the UV lamp sleeves and corrosion of the lamp shunt and pins, which results in shorter UV lamp life. Use a lint-free cloth to remove water or debris.

Build-up on the UV lamp sleeves decreases the amount of UV light, and can result in higher UV lamp temperatures and decreased UV lamp efficiency.

Only use Trojan Technologies approved cleaning solutions on the Lamp and Sensor Sleeves. Use of unapproved chemicals may result in damage to the equipment. For a list of approved cleaning solutions refer to Table 7.

Table 7 Approved Cleaning Solutions and Dilutions Ratios

Solution	Dilution
ActiClean Gel	Not Required
20% Phosphoric Acid	2 parts ActiClean Gel to 1 part acid
40% Phosphoric Acid	5 parts ActiClean Gel to 1 part acid
75% Phosphoric Acid	10 parts ActiClean Gel to 1 part acid
80% Phosphoric Acid	12 parts ActiClean Gel to 1 part acid

Prerequisites:

- Remove Lamp Sleeve. Refer to Section 9.4.1.

Materials:

Procedure:

1. Clean the UV lamp sleeve with a mild acidic solution and a lint-free cloth. Move the cloth up and down the UV lamp sleeve.

   Note: *Clean up spills to avoid slipping and dispose ActiClean Gel as per site and country protocol.*

2. Rinse the UV lamp sleeve with clean water.
3. When service is complete, assemble the prerequisites in the reverse order of disassembly.

9.5 UVI Sensor

9.5.1 Remove and Install the UVI Sensor

Prerequisites:

- Shutdown the UV Bank. Refer to Section 5.2.
- Lockout Tag Out - PDC compartment for the associated UV Bank. Refer to Section 4.

Materials:

Procedure:

Remove:

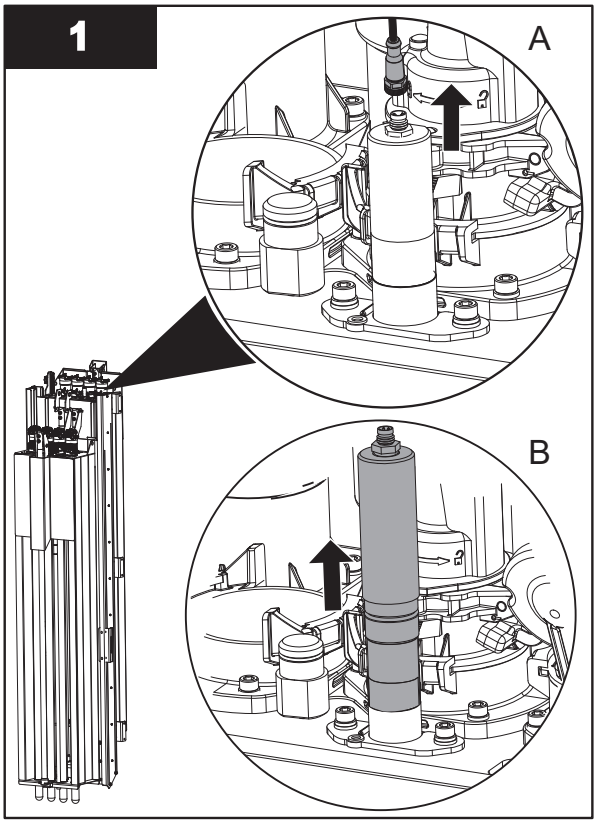

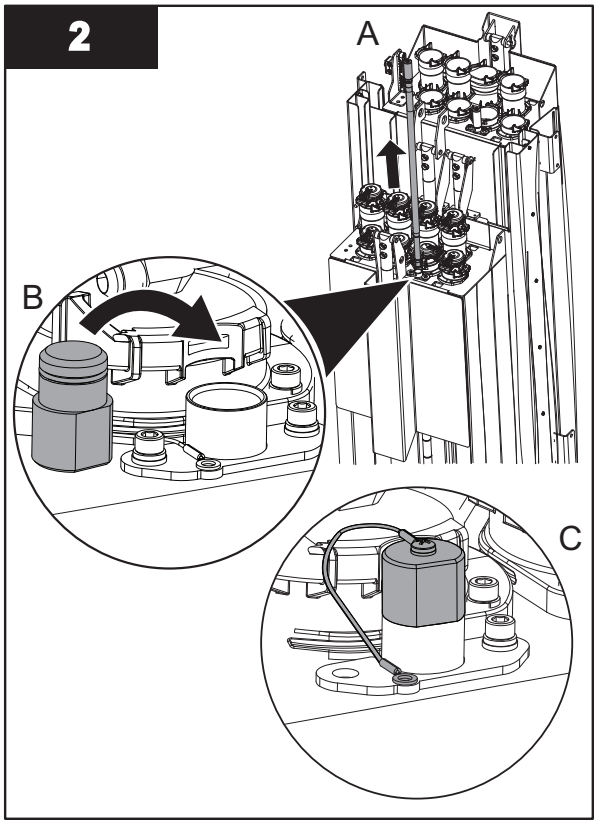

Note: *Repeat removal steps 1-2 for UVI Sensor on additional UV Banks if required.*

Install:

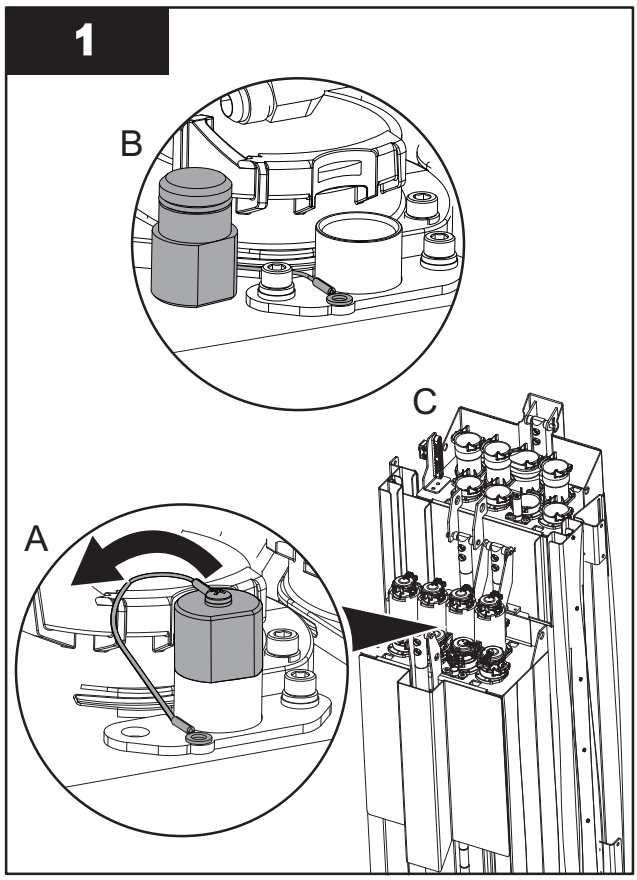

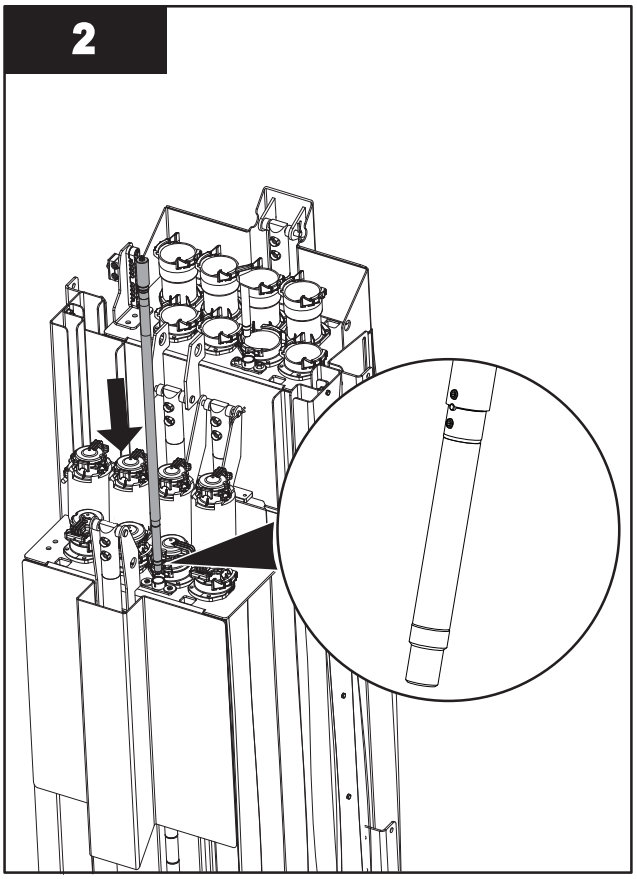

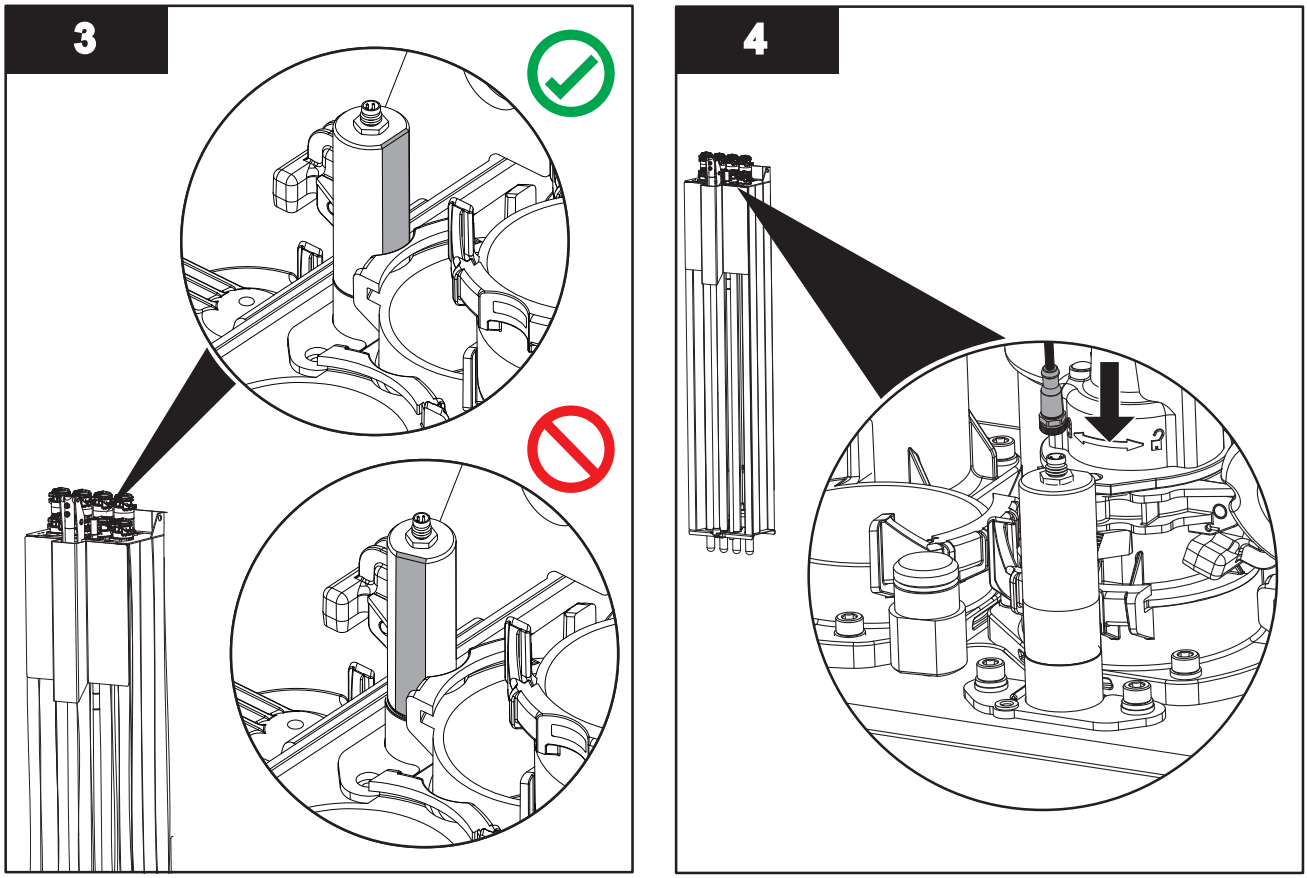

Note: *Rotate UVI Sensor until fully seated and is in proper orientation.*

9.5.2 Remove and Install UVI Sensor Housing

Prerequisites:

- Shutdown the UV Bank. Refer to Section 5.2.
- Lockout Tag Out - PDC compartment for the associated UV Bank. Refer to Section 4.
- Lift the UV Bank Up - Install the UV Bank locking plates. Refer to Section 8.1.2.
- Manually Operate the Wiper - Move the Wiper to 1/2 Way. Refer to Section 8.1.4.
- Remove the UVI Sensor. Refer to Section 9.5.1.

Tools:

10 mm

Materials:

Procedure:

Remove:

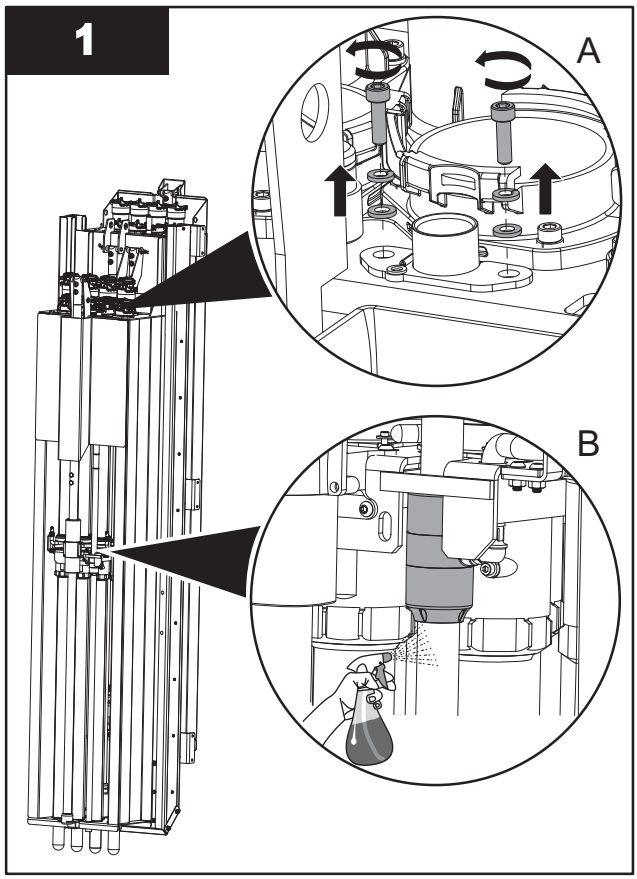

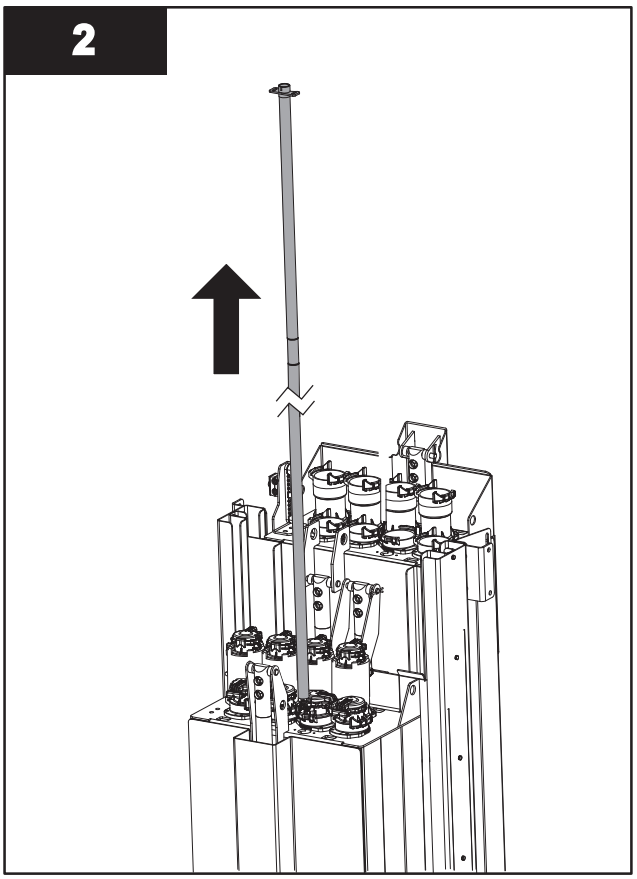

Install:

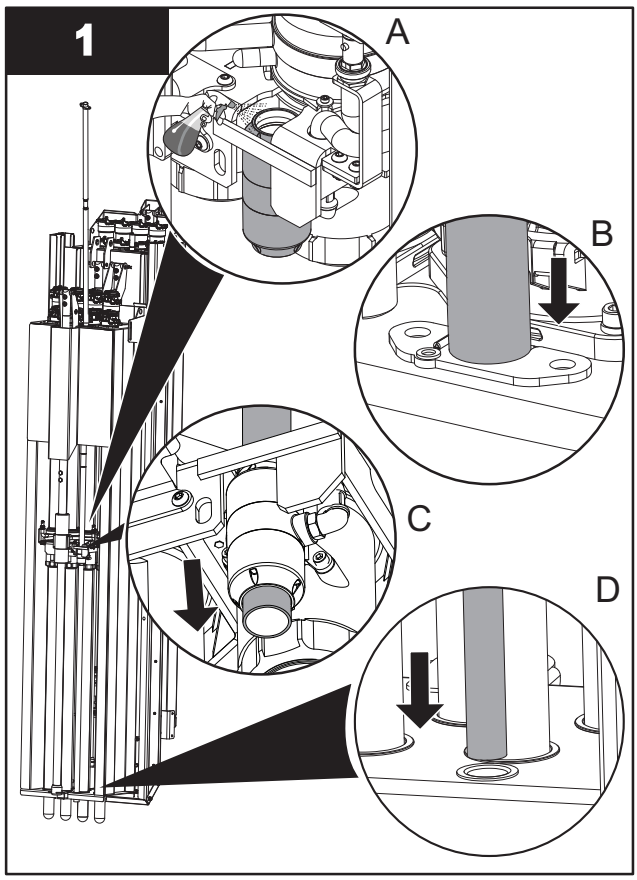

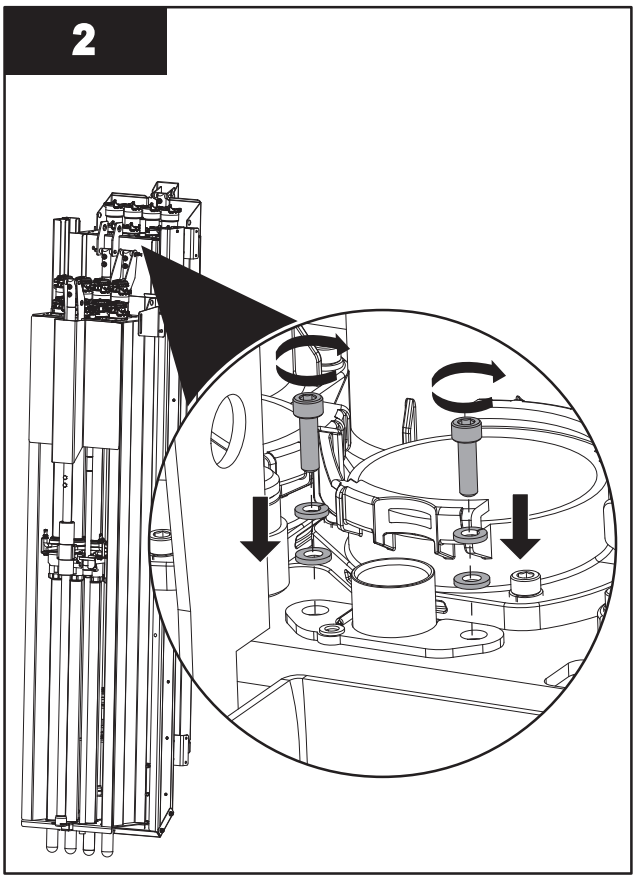

9.5.3 Clean the UVI Sensor Housing Sleeve

NOTICE
Do not use abrasive materials to clean the UVI Sensor Housing Sleeve. Abrasive materials will scratch and cause damage.

Clean the UVI Sensor Housing Sleeve with a mild acidic solution when a low UVI alarm or a low UV dose alarm is not resolved after the Sleeve is cleaned with the wiper.

Prerequisites:

- Remove the UVI Sensor Housing. Refer to Section 9.5.2.

Materials:

Procedure:

1. Wipe down the UVI Sensor Housing Sleeve with a mild acidic solution and a lint-free cloth (Refer to Table 7). Wipe up and down the length of the sleeve. Wipe until all the build-up on the sleeve is removed.

   Note: *Clean up spills to avoid slipping and dispose ActiClean Gel as per site and country protocol.*

2. Rinse the UVI Sensor Housing Sleeve fully with clean water.
3. Install the UVI Sensor Housing Sleeve (Section 9.5.2).

9.5.4 Remove and Replace UVI Sensor Housing Sleeve

Prerequisites:

- Shutdown the UV Bank. Refer to Section 5.2.
- Lockout Tag Out - PDC compartment for the associated UV Bank. Refer to Section 4.
- Lift the UV Bank Up - Install the UV Bank locking plates. Refer to Section 8.1.2.
- Manually Operate the Wiper - Move the Wiper to 1/2 Way. Refer to Section 8.1.4.
- Remove the UVI Sensor. Refer to Section 9.5.1.
- Remove the UVI Sensor Housing. Refer to Section 9.5.2.
- Clean the UVI Sensor Housing Sleeve. Refer to Section 9.5.3.

Tools:

Materials:

Note: *It is recommended to use clean Kevlar gloves to handle the quartz sleeve.*

- UVI Sensor Housing Replacement Kit
  - Two (2) Silicone Gaskets
  - Six (6) Silicone O-Rings
  - One (1) Quartz Sleeve
  - One (1) Desiccant Pack Holder

Procedure:

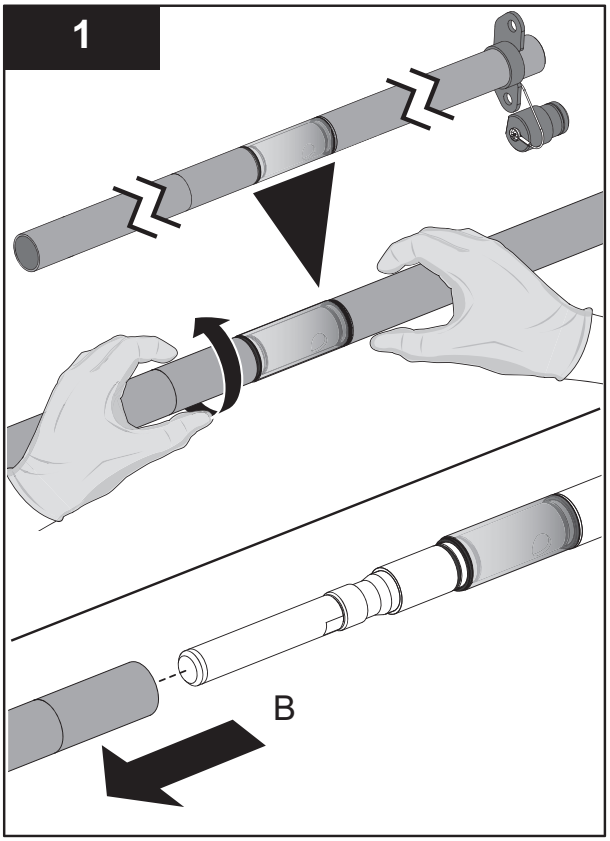

Note: *Twist the bottom section of UVI Sensor Housing to remove from the top section.*

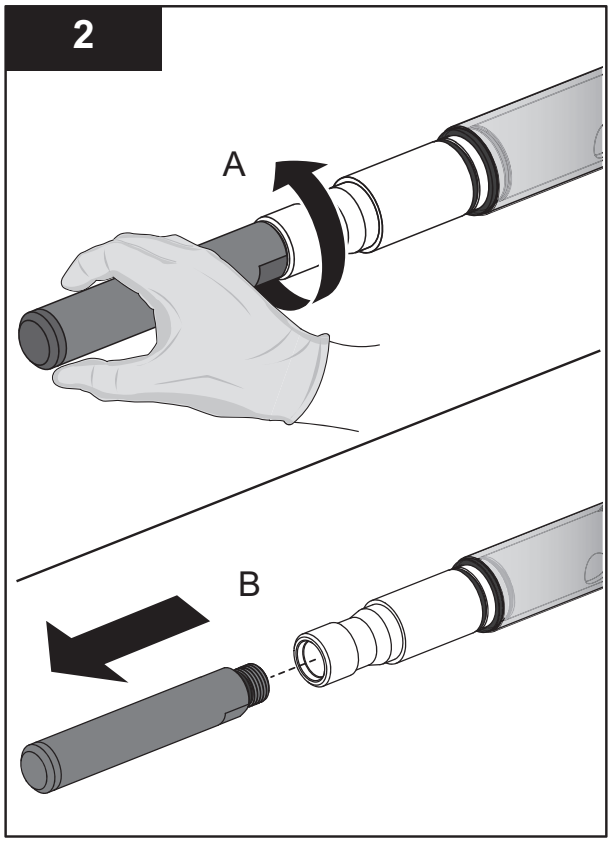

Note: *Remove the Desiccant Pack Holder from the end of the top section.*

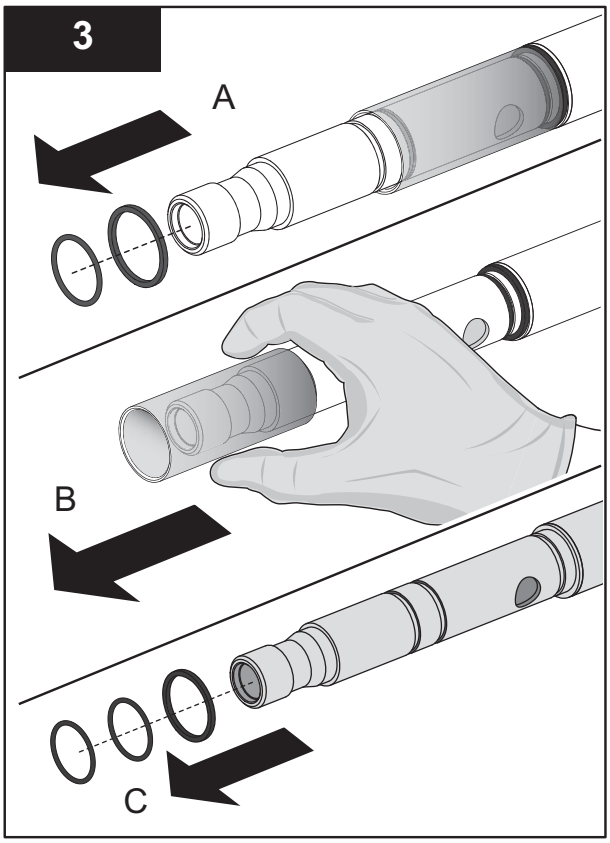

Note: *Remove the existing quartz sleeve, gaskets and O-Rings from the UVI Sensor Housing body.*

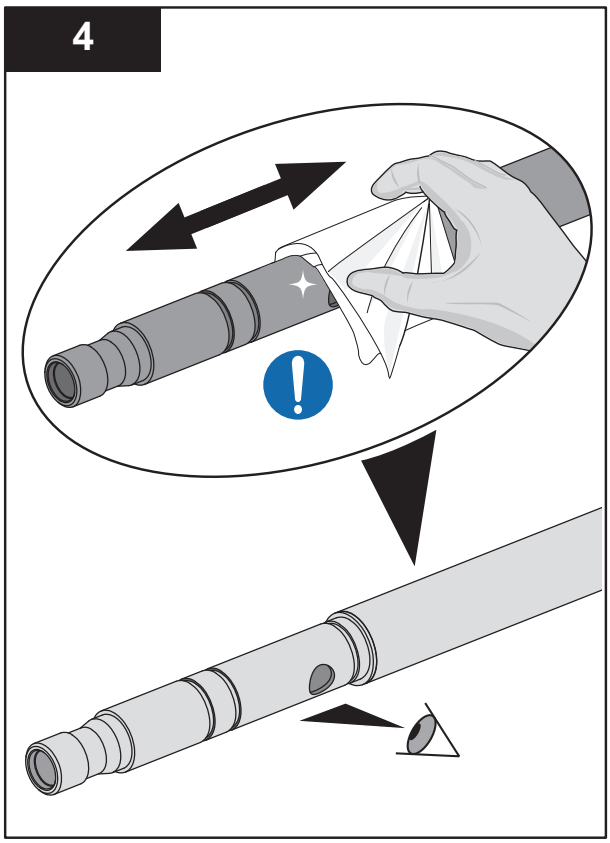

Note: *Ensure there is no moisture inside the UVI Sensor Housing.*

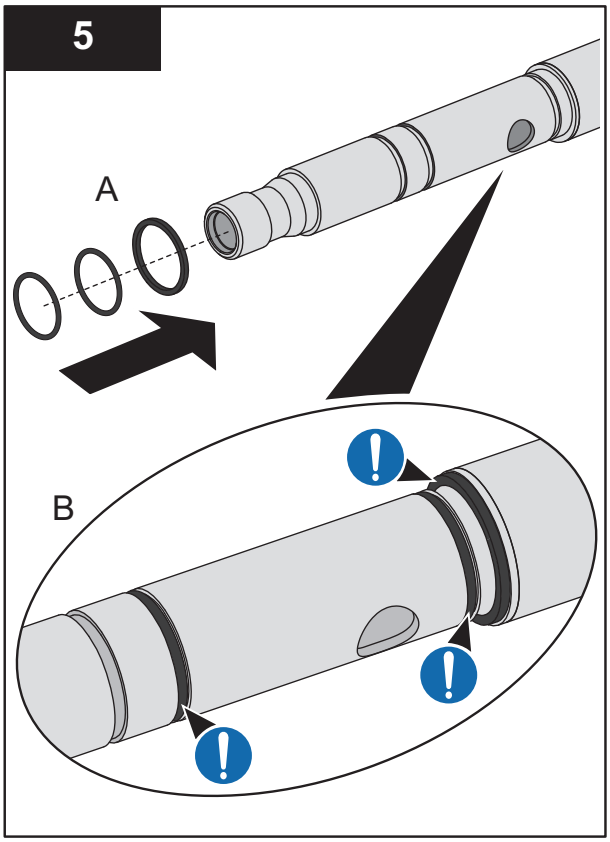

Note: *Install one (1) gasket and two (2) O-Rings as shown.*

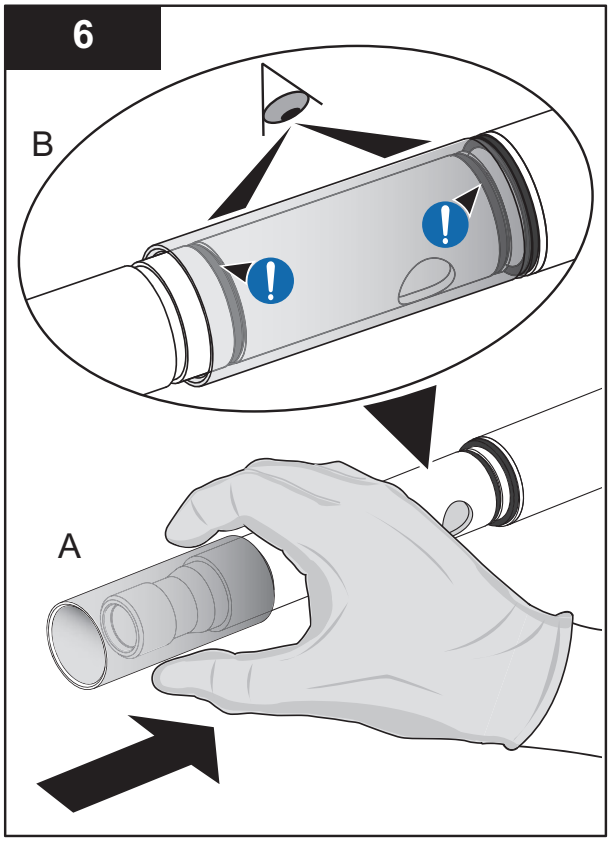

Notes: *1) Install the new quartz sleeve onto the UVI Sensor Housing.*
2) Ensure O-rings are correctly seated in the grooves on the UVI Sensor Housing body.

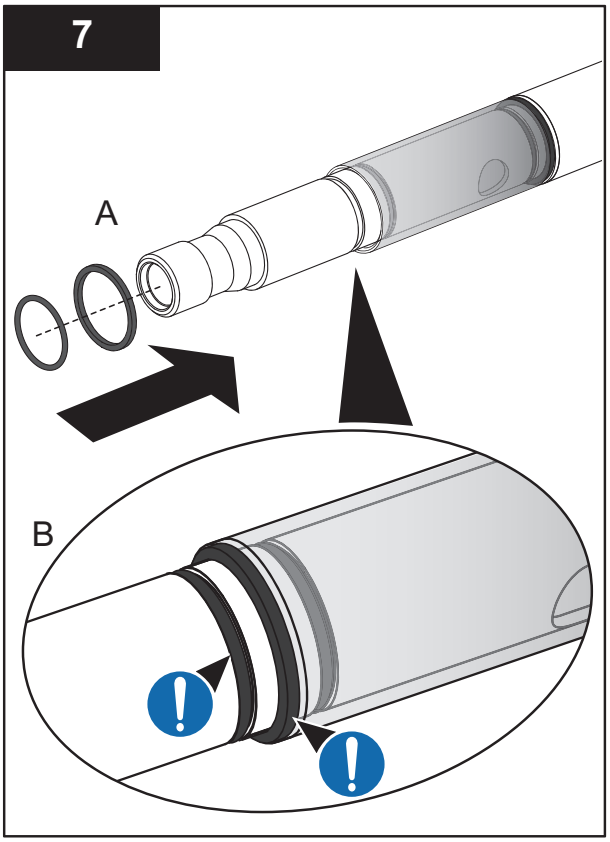

Note: *Install one (1) gasket and one (1) O-Ring as shown.*

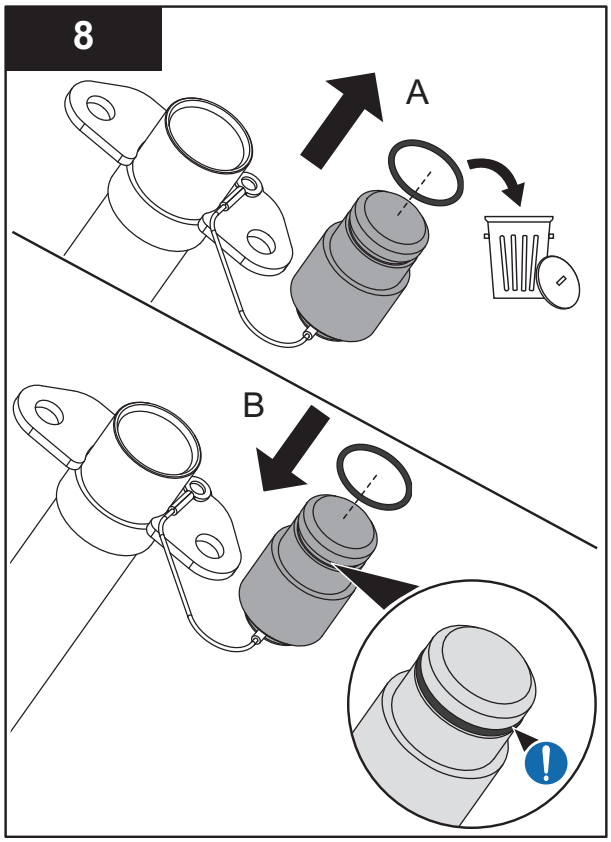

Note: *Replace the O-Ring on the UVI Sensor Port Plug.*

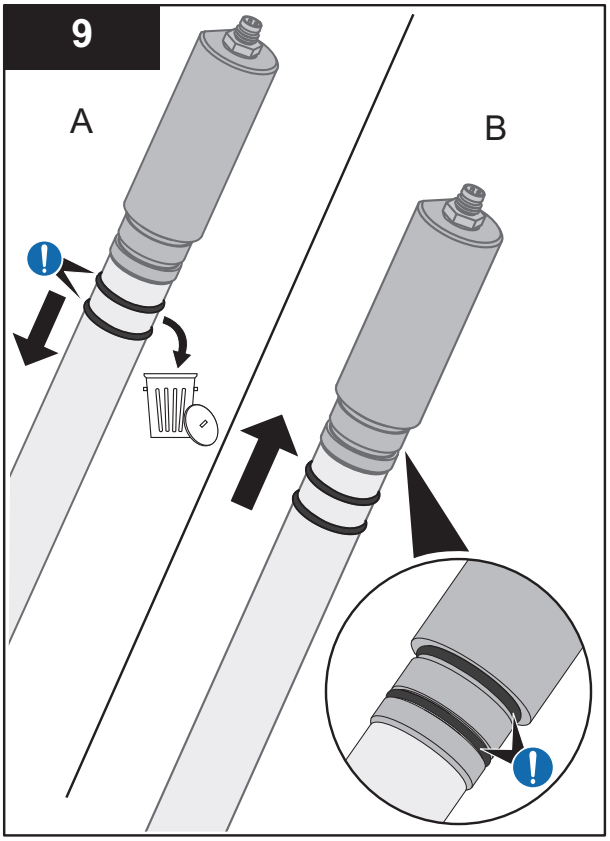

Note: *Replace the two (2) O-Rings on the UVI Sensor.*

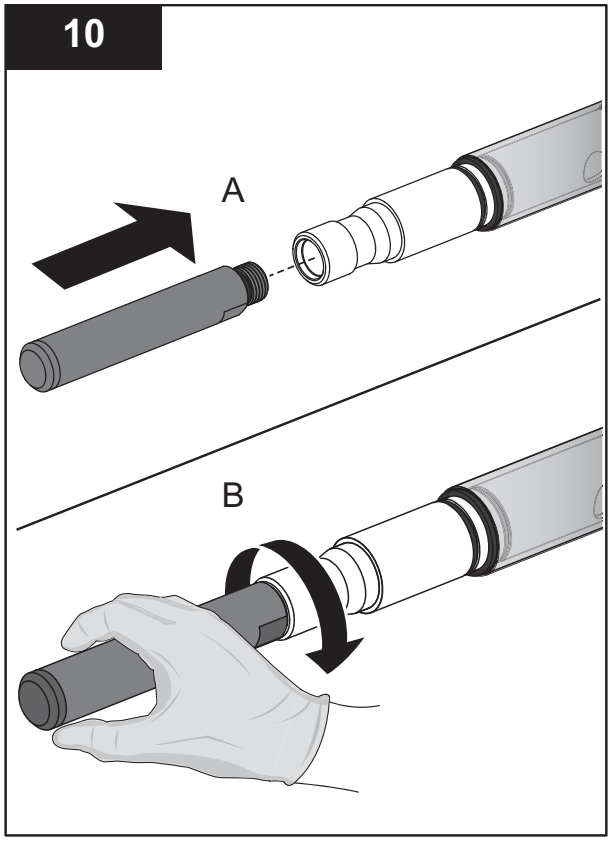

Note: *Install the new Desiccant Pack Holder into the end of the top section of the UVI Sensor Housing.*

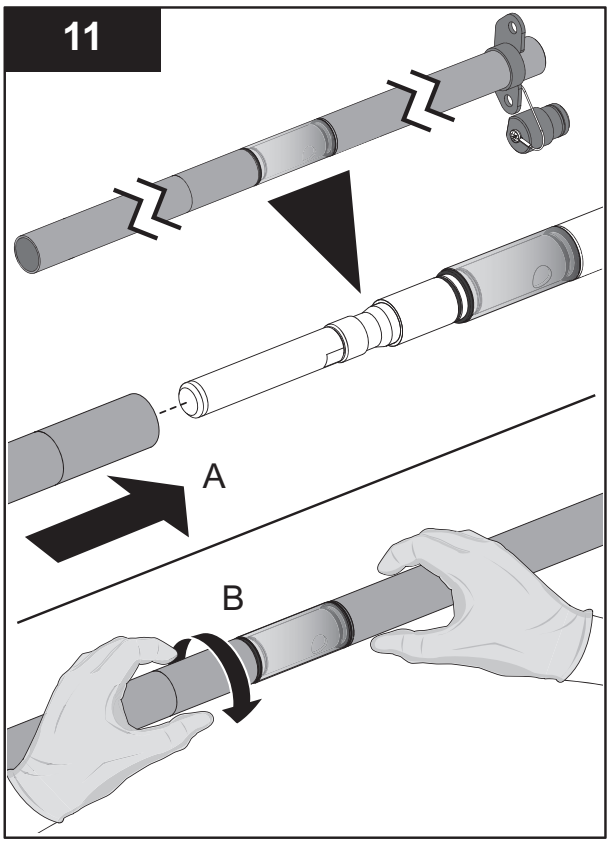

Note: *Install the top section of the UVI Sensor Housing into the bottom section.*

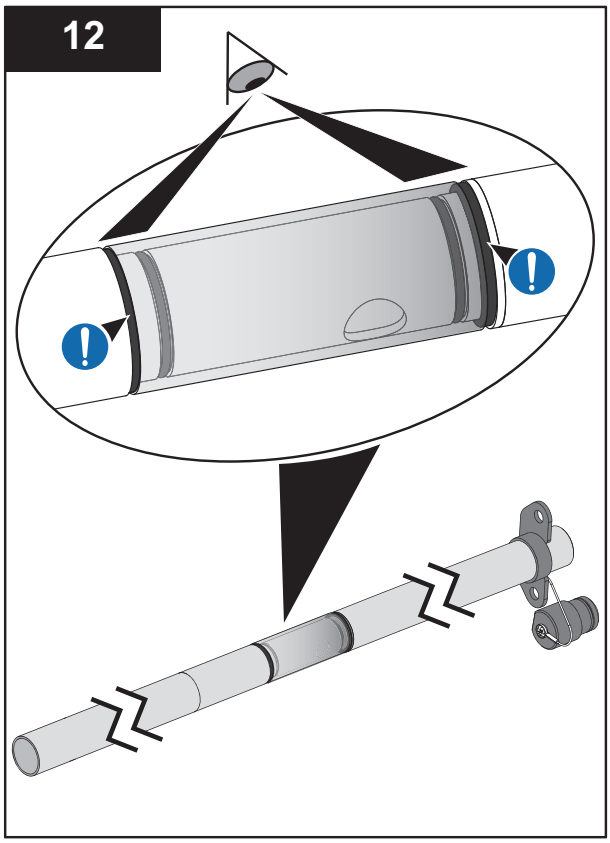

Note: *Make sure the gaskets are not pinched or bulged out.*

When service is complete, assemble the prerequisites in the reverse order of disassembly.

9.5.5 Remove and Install UVI Sensor Wiper

Prerequisites:

- Lift the UV Bank Up - Install the UV Bank locking plates. Refer to Section 8.1.2. Replace grating section(s).
- Move the Wiper to 1/2 way. Refer to Section 8.1.4.
- Remove the UVI Sensor Housing. Refer to Section 9.5.2.

Tools:

Materials:

- Wiper Canister (if required)

Procedure:

Remove:

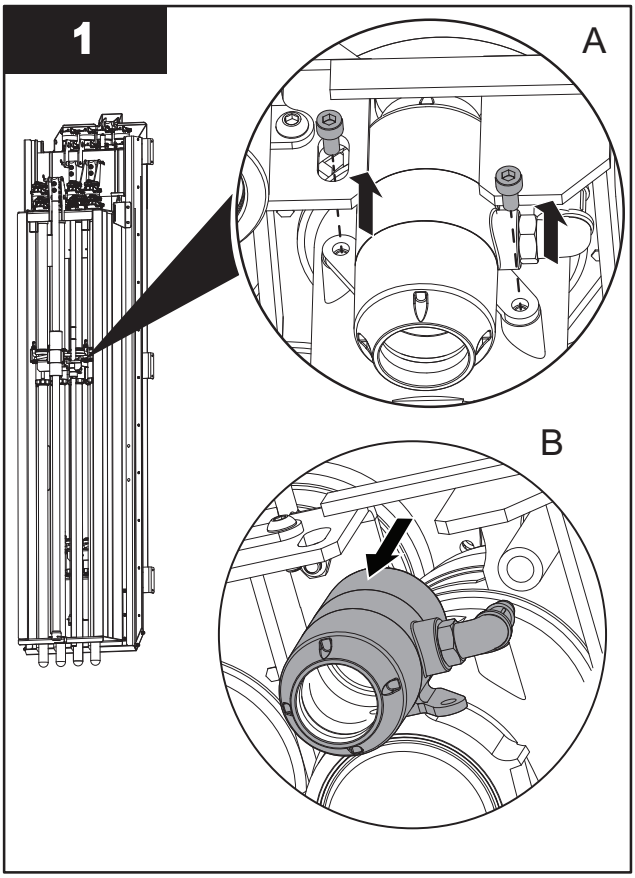

Install:

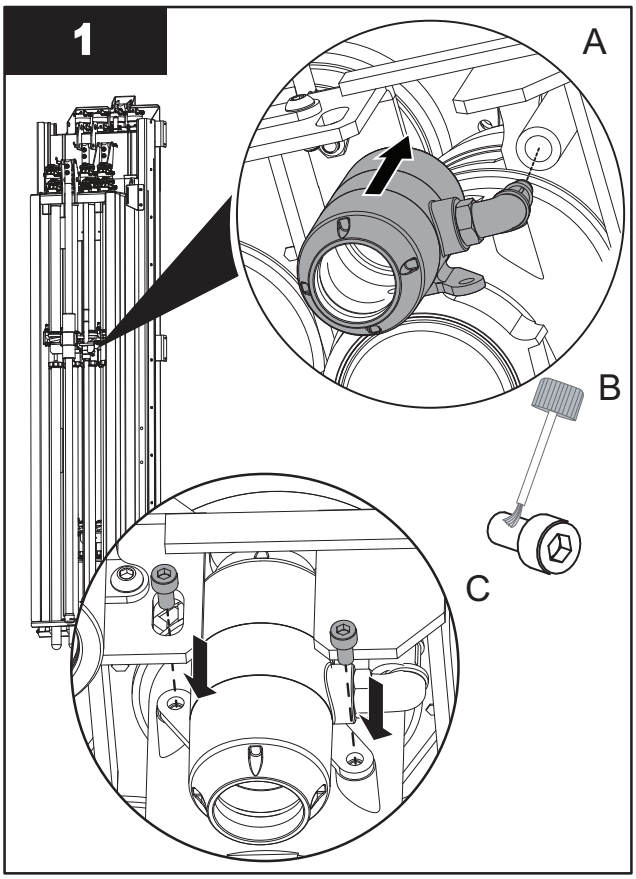

2. Press fit the hose to the sensor wiper fitting.

9.5.6 Remove and Replace UVI Sensor Wiper O-rings and Fittings

Prerequisites:

- Remove the UVI Sensor Wiper. Refer to Section 9.5.5.

Materials:

- Wiper Seal Assembly (if required)
- O-rings (if required)
- Fittings (if required)
- End Caps (if required)
- Loctite 222MS Threadlocker

Procedure:

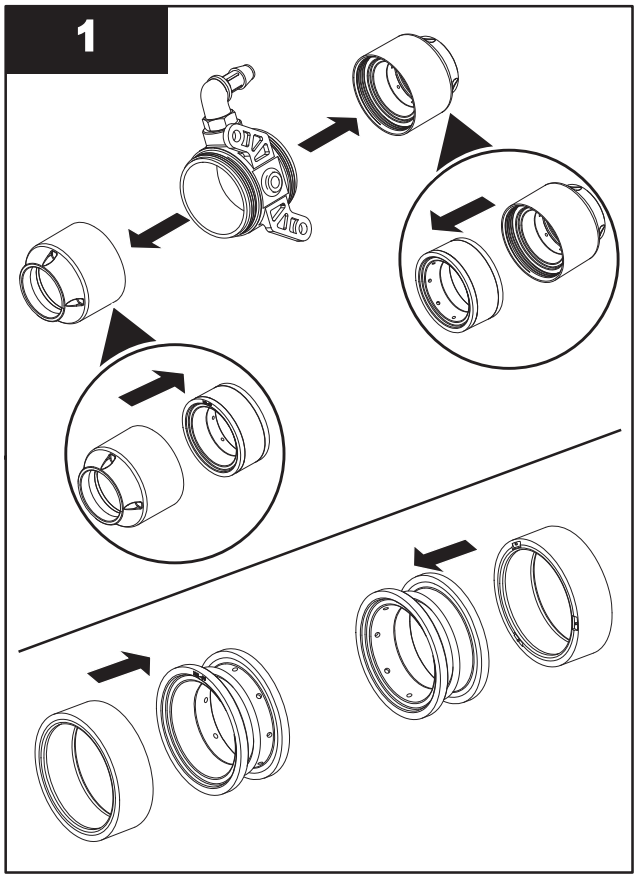

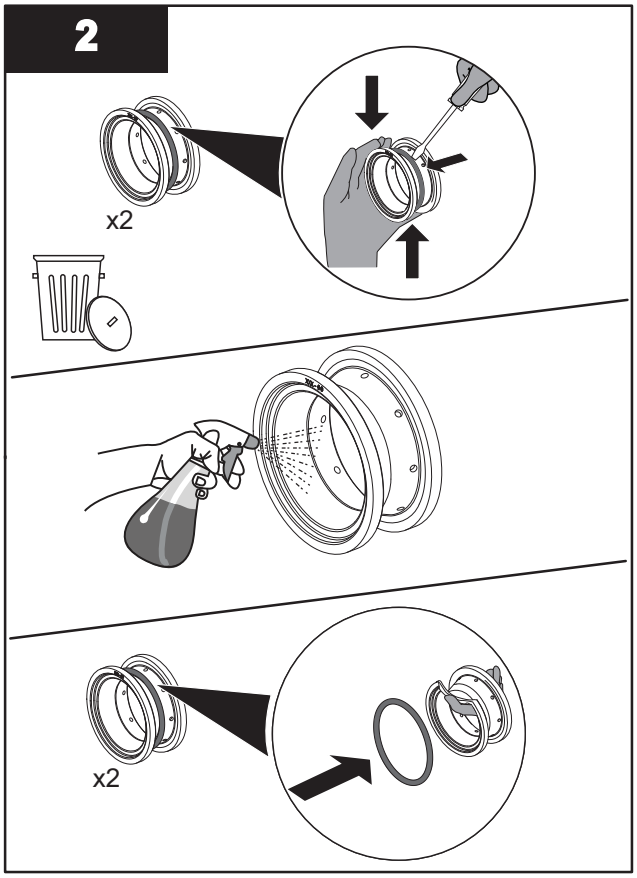

Note: *Ensure inside is free of debris.*

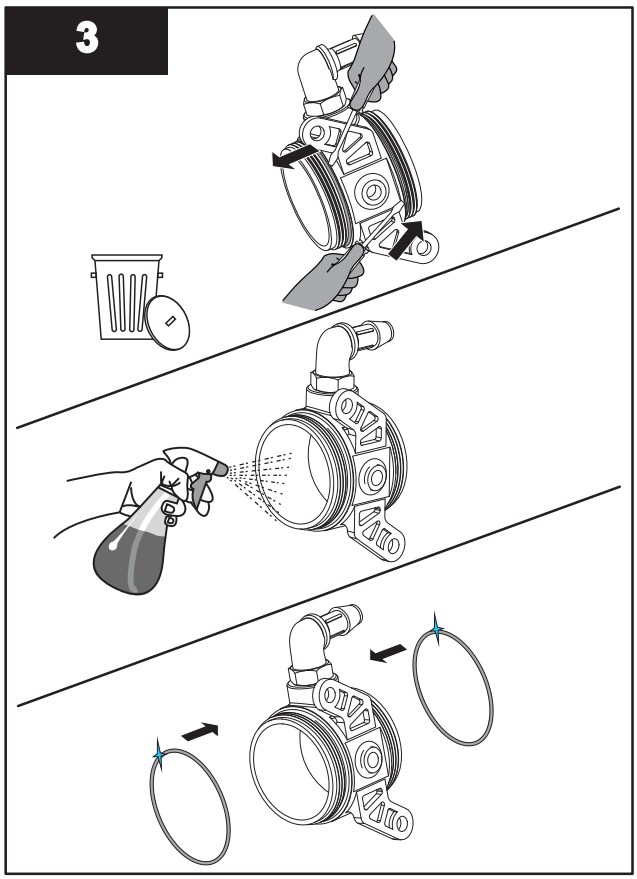

Note: *Ensure O-rings are not rolled or twisted.*

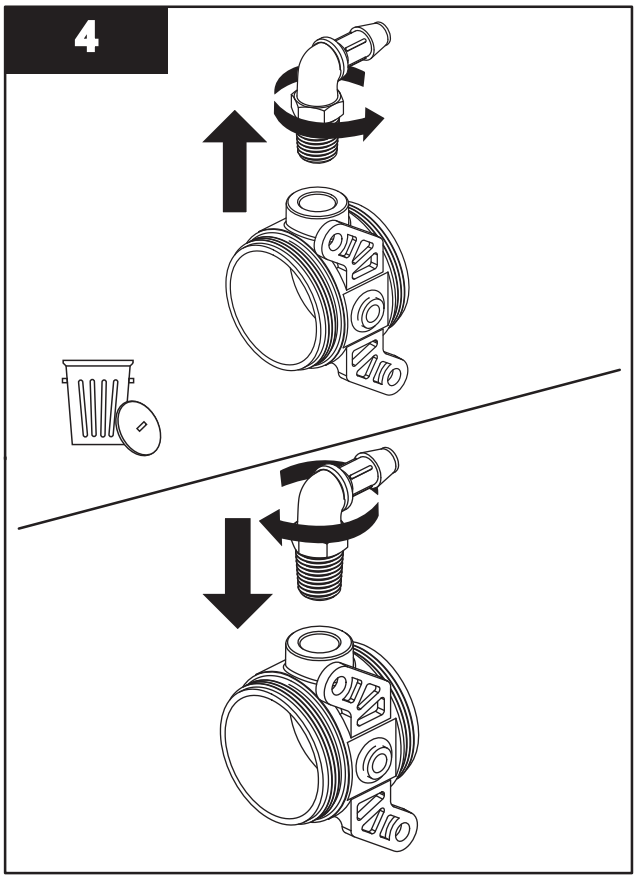

Note: *Replace fill port if damaged or broken.*

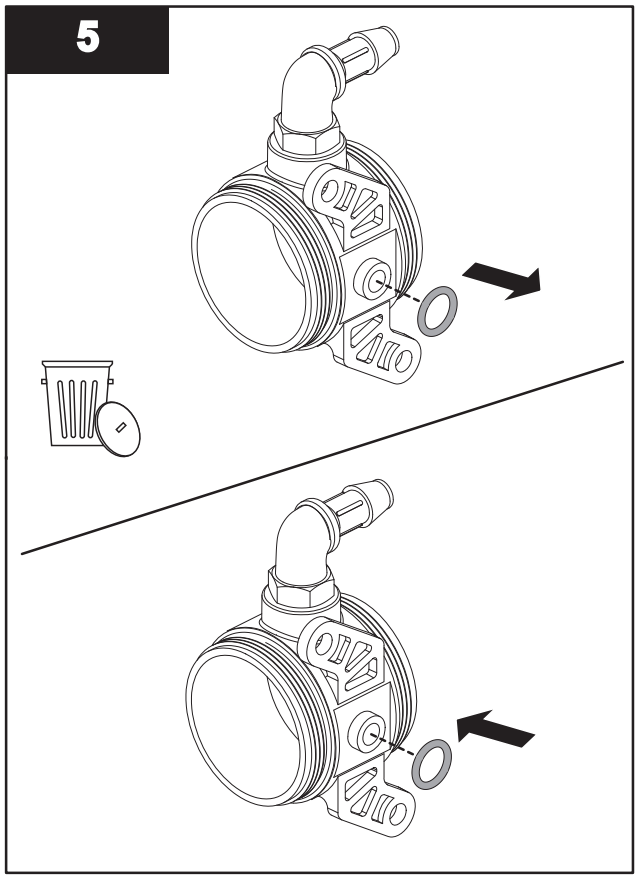

Note: *Replace the O-rings if damaged or broken.*

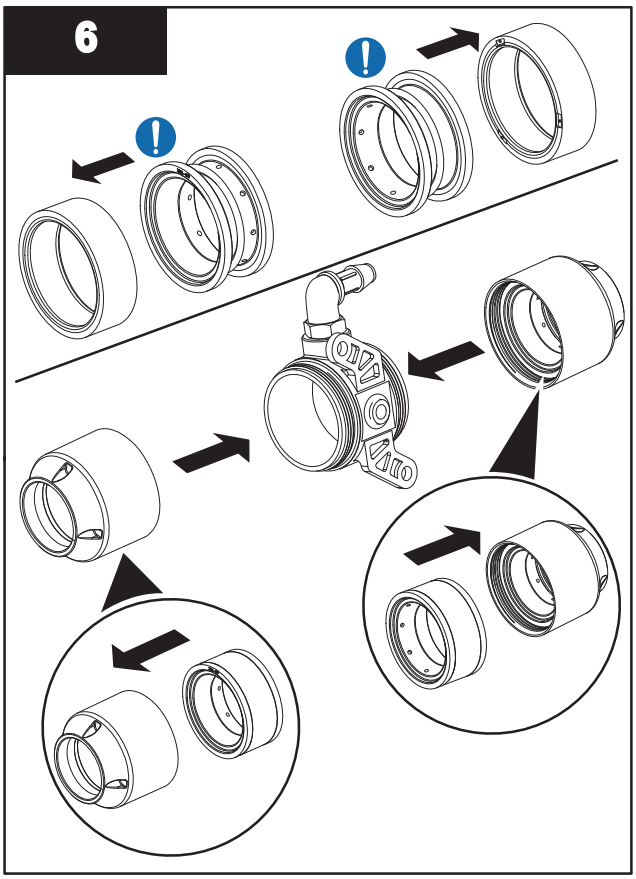

Note: *Ensure the vent holes on the wiper seal are facing the inside of the canister.*

9.5.7 Remove and Replace UVI Sensor Floor Bushing

Prerequisites:

- Remove UVI Sensor Housing. Refer to Section 9.5.2.

Tools:

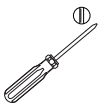

Materials:

- New Bushing

Procedure:

Remove:

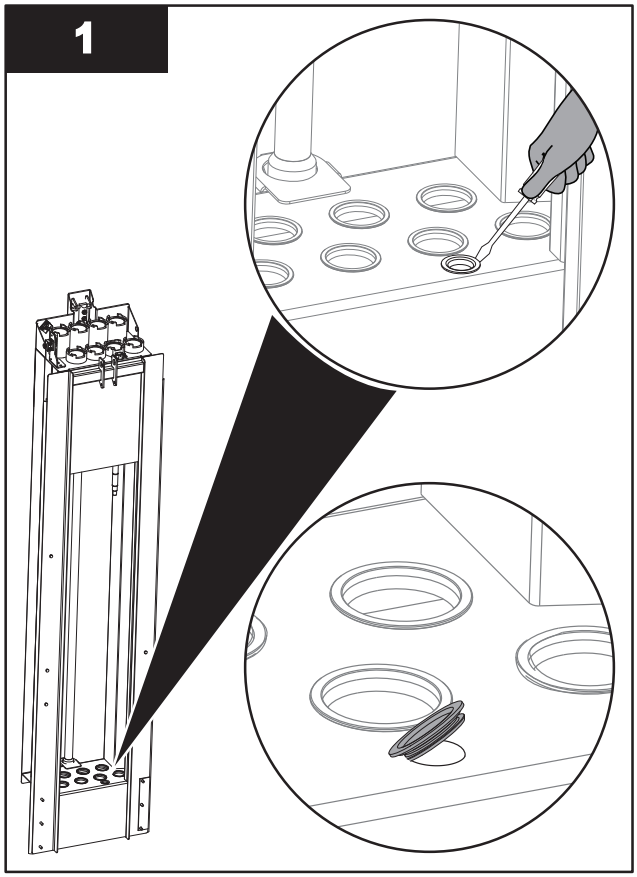

Replace:

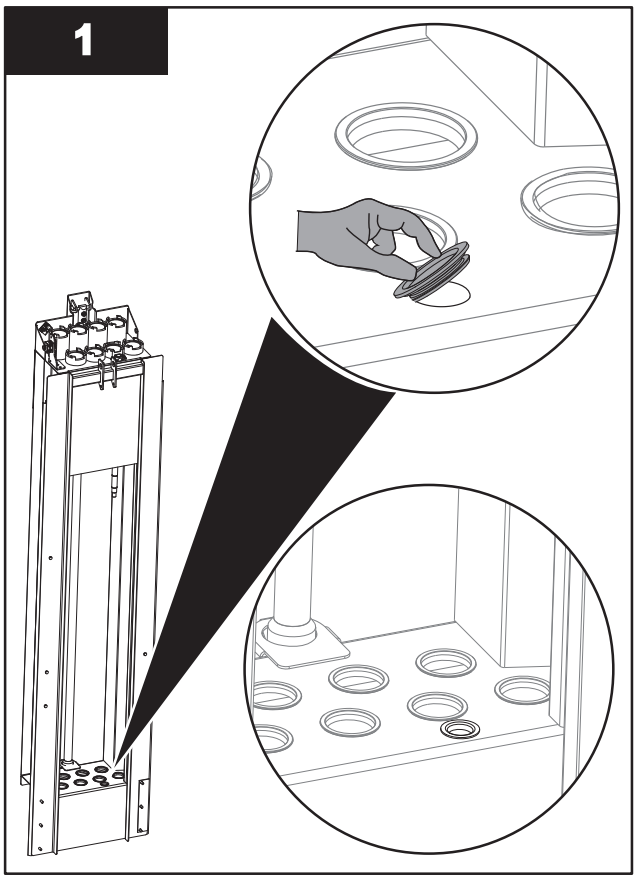

9.6 UV Bank

9.6.1 Clean the UV Bank

Prerequisites:

- Lift the UV Bank Up - Install the UV Bank locking plates. Refer to Section 8.1.2. Replace grating section(s).

Tools:

Materials:

Procedure:

1. Remove large debris as required.

2. Use hose and water to remove smaller debris, algae etc.
3. When service is complete, assemble is reverse order of disassembly.

9.6.2 Replace Sleeve Bushing (Floor)

Replace floor sleeve bushings during regular scheduled maintenance or as required.

Prerequisites:

- Remove the Lamp Sleeve. Refer to Section 9.4.1.

Tools:

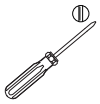

Materials:

- New Floor Bushings

Procedure:

Remove:

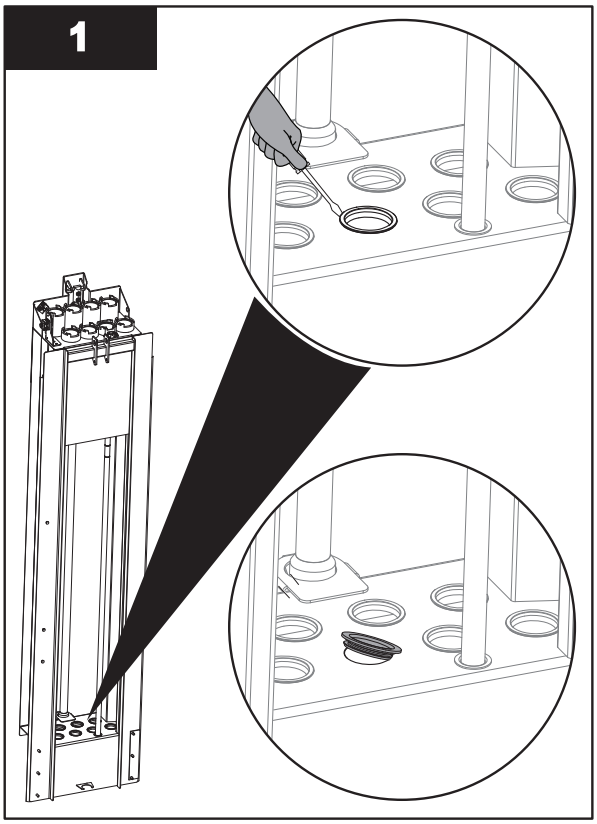

Install:

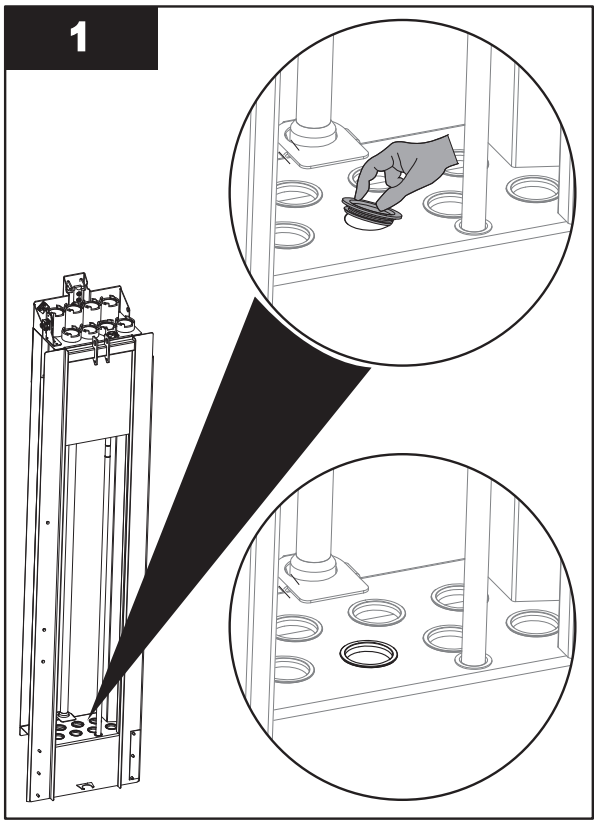

9.7 Lamp Sleeve Wiper

The required maintenance consists of replacing the wipers, and filling the wiper canisters with ActiClean Gel. The frequency of service depends upon:

- Nature of the fouling agent
- Rate of fouling
- Frequency of cleaning

On average, wiper seals should be inspected every 6 months or whenever sleeves are checked. Replace it if necessary. Otherwise, wiper seal should be replaced every 2 years as per Table 5. ActiClean Gel should be recharged whenever sleeves are checked or a minimum of every 6 months.

9.7.1 Wiper Plate Fill and Vent Ports

The UV Bank can have one or two wiper plates depending on project configuration. Each wiper plate has four (4) fill / vent ports.

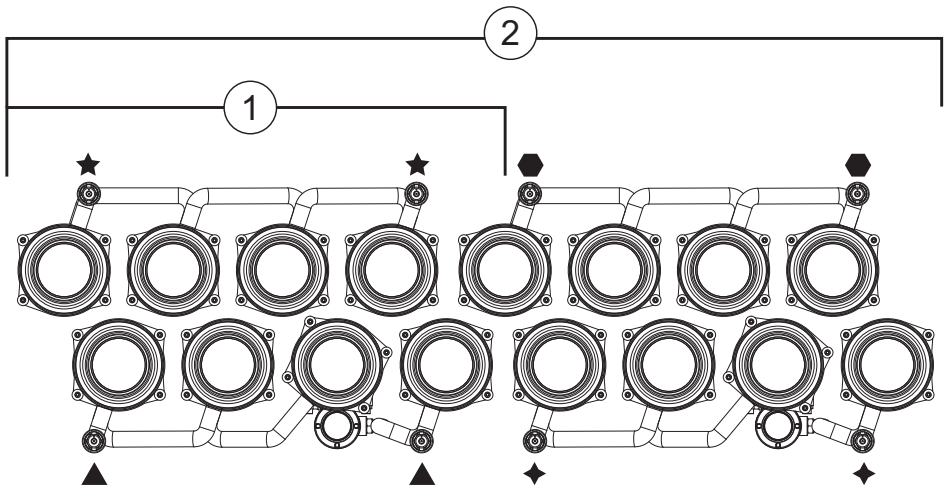

Figure 63 Vent / Drain Location

1	8 - 12 UV Lamps per Bank arrangement	**2**	14 - 24 UV Lamps per Bank arrangement

9.7.2 Fill Wiping System

Fill wiper canisters using a Hand Pump - Refer to Instruction Document Number **DC340601-011.**

Fill wiper canisters using a Drill Pump - Refer to Instruction Document Number **DC340601-008.**

9.7.3 Flush the Wiping System

Prerequisites:

- Lift the UV Bank Up - Install the UV Bank locking plates. Refer to Section 8.1.2. Replace grating section(s).
- Move the Wiper to 1/2 way. Refer to Section 8.1.4.
- Lockout Tag Out - HSC and PDC compartment for the associated UV Bank. Refer to Section 4.
- Remove all lamp sleeves from UV Bank. Refer to Section 9.4.1.
- Remove UVI Sensor Housing. Refer to Section 9.5.2.

Tools:

Materials:

Procedure:

Flush:

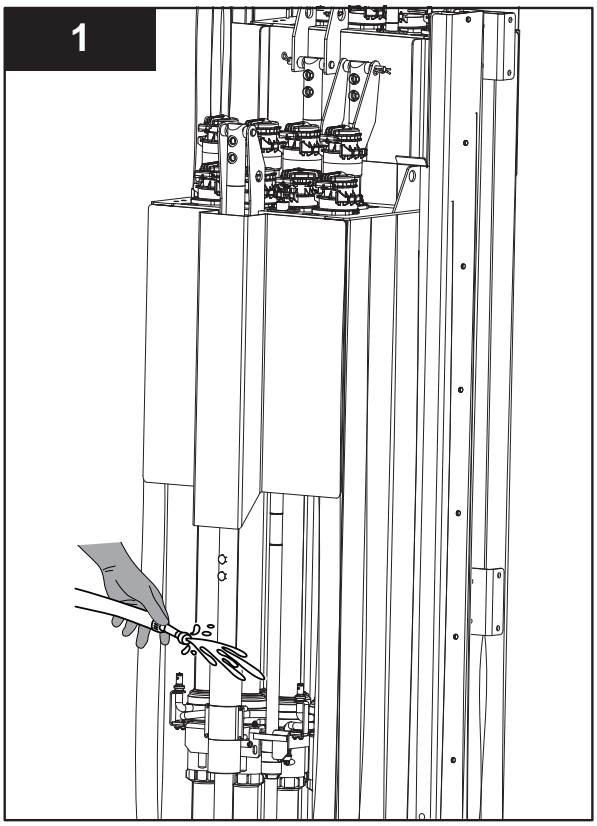

2. Install UVI Sensor Housing (Section 9.5.2).
3. Install UV Lamp Sleeves (Section 9.3.2).
4. Fill Wiping System (Section 9.7.2).

9.7.4 Remove and Install a Wiper Canister

Prerequisites:

- Lift the UV Bank Up - Install the UV Bank locking plates. Refer to Section 8.1.2. Replace grating section(s).
- Move the Wiper to 1/2 way. Refer to Section 8.1.4.
- Lockout Tag Out - HSC and PDC compartment for the associated UV Bank. Refer to Section 4.
- Remove Lamp Sleeve. Refer to Section 9.4.1.
- Remove the UVI Sensor Wiper (for canister behind UVI Sensor only). Refer to Section 9.5.5.

Tools:

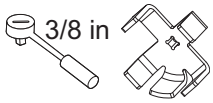

Materials:

Procedure:

Remove:

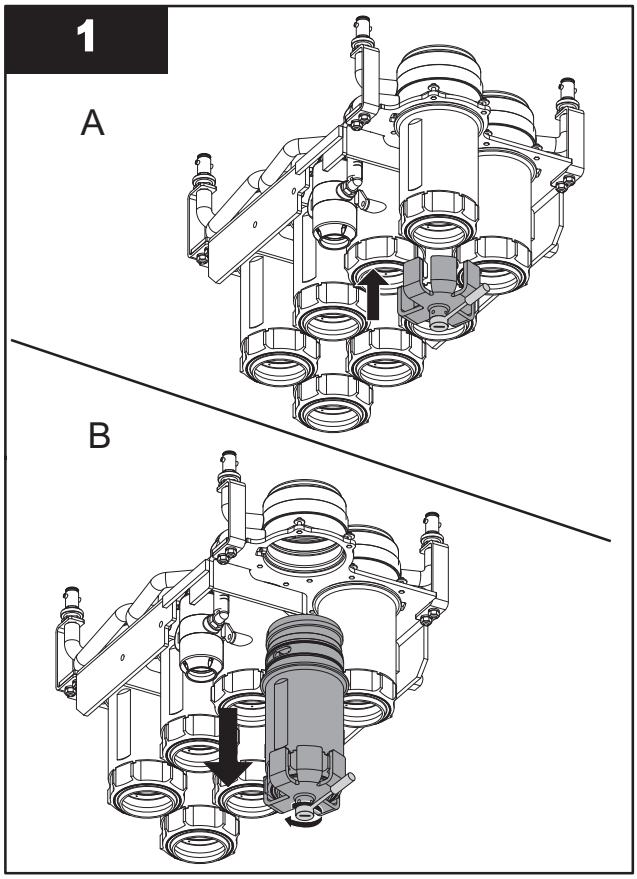

Install:

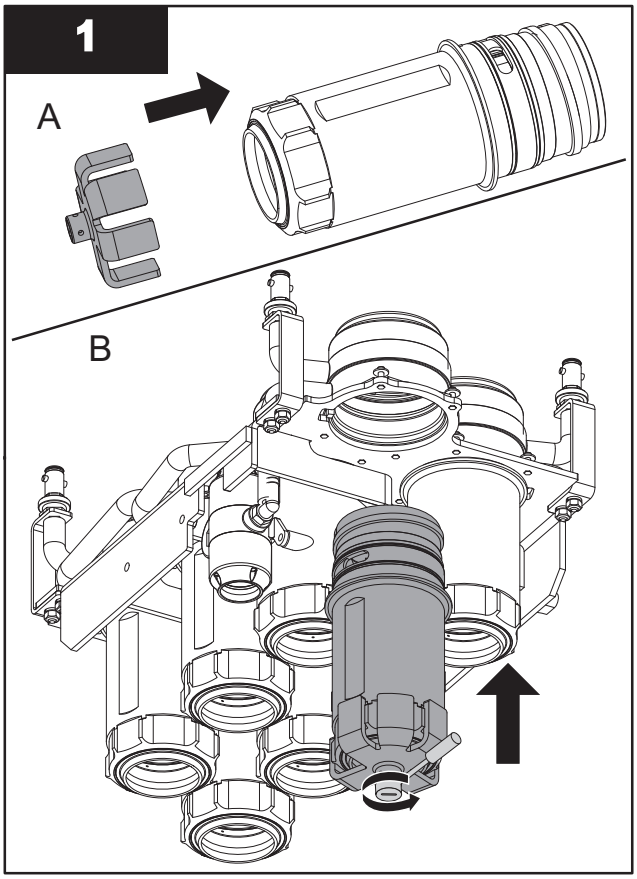

Note: *Insert the canister body tool onto the bottom of the canister.*

9.7.4.1 Remove and Replace Wiper Seals, O-rings and Bushings

Replace the wiper seals, O-rings and bushings during scheduled maintenance or when wiper seals, O-rings or bushings are worn out and do not clean the lamp sleeves.

Prerequisites:

- Remove a Wiper Canister. Refer to Section 9.7.4.

Tools:

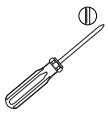

Materials:

- New seals (if required)
- New wiper bushing (if required)
- New O-rings

Procedure:

Remove:

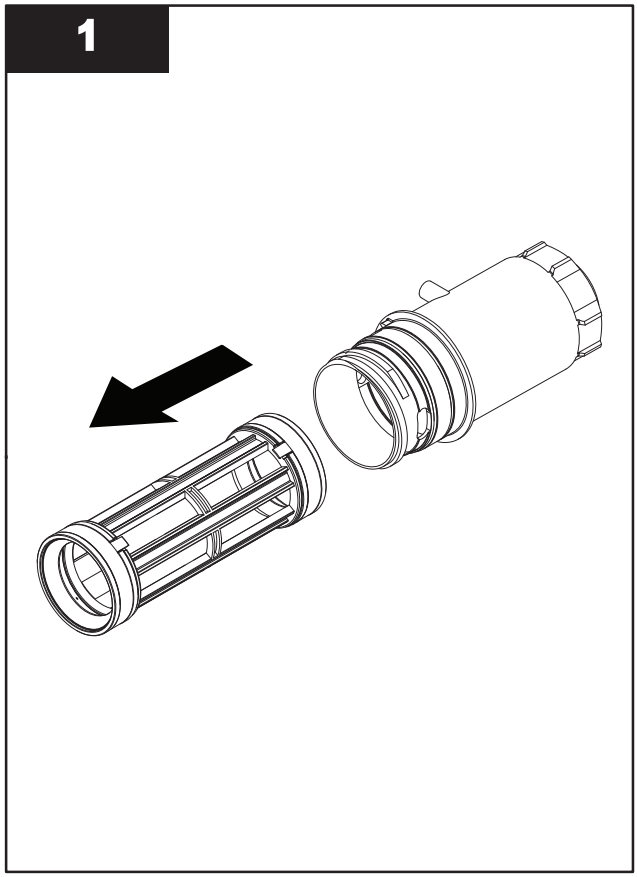

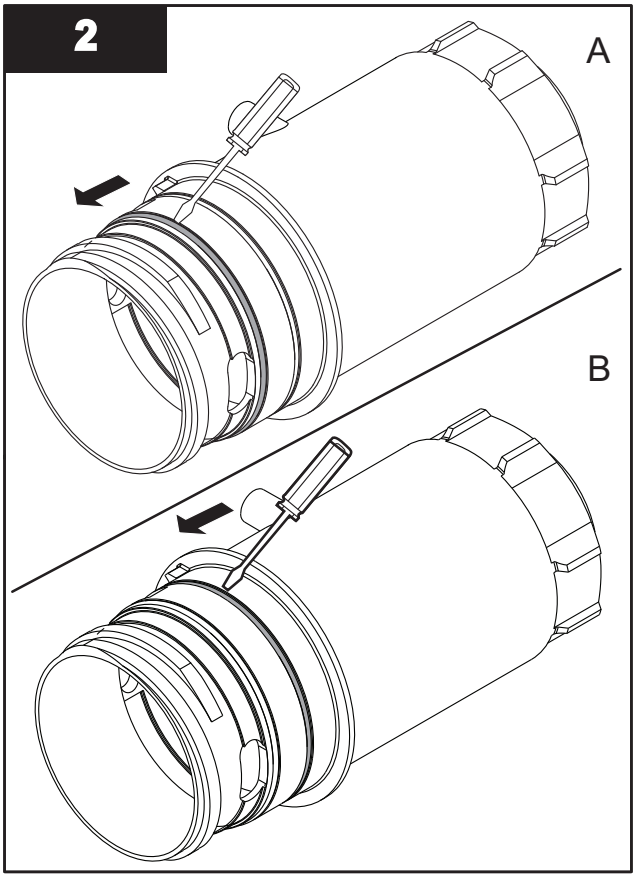

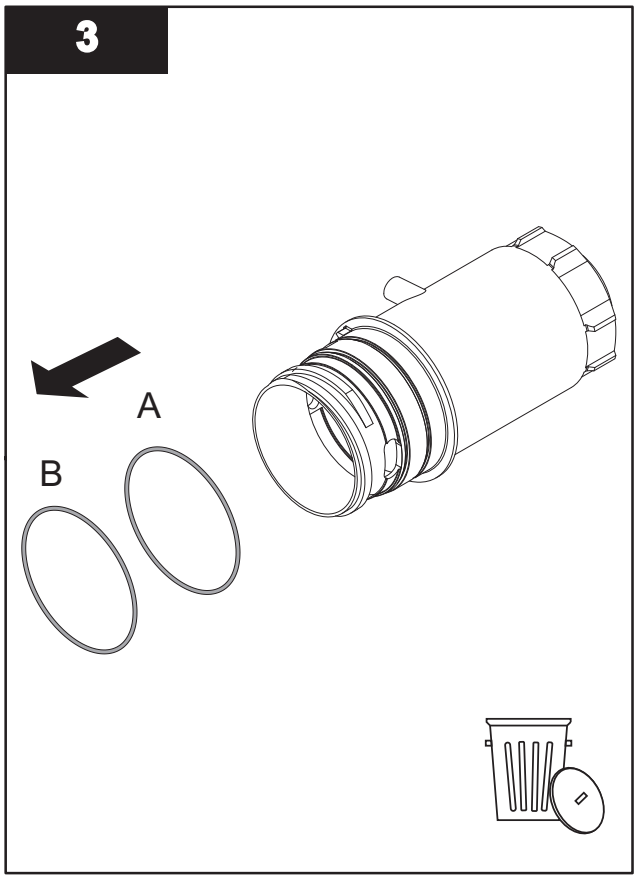

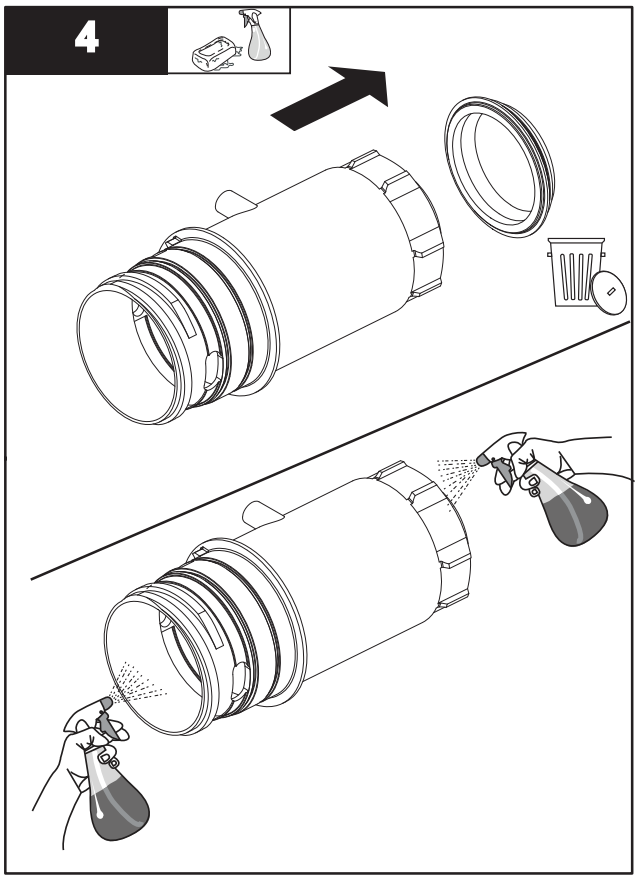

Install:

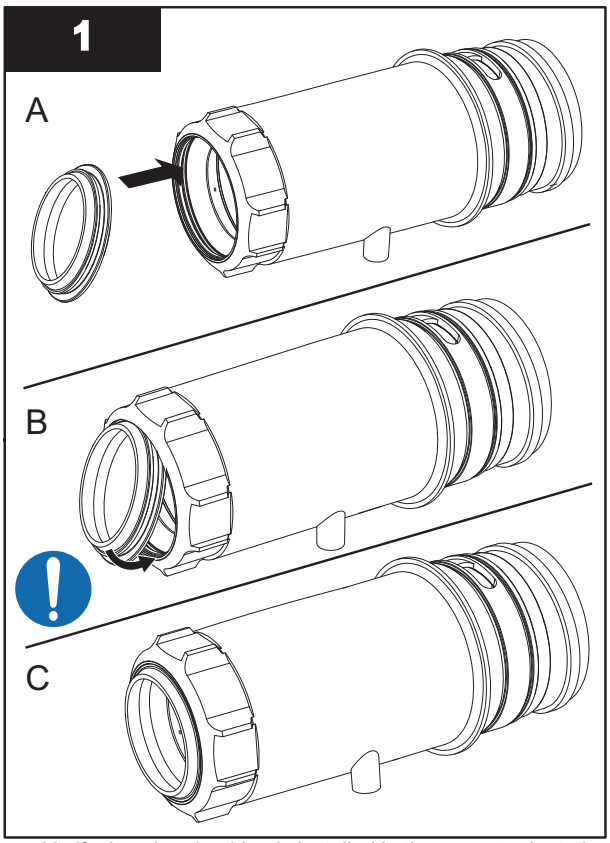

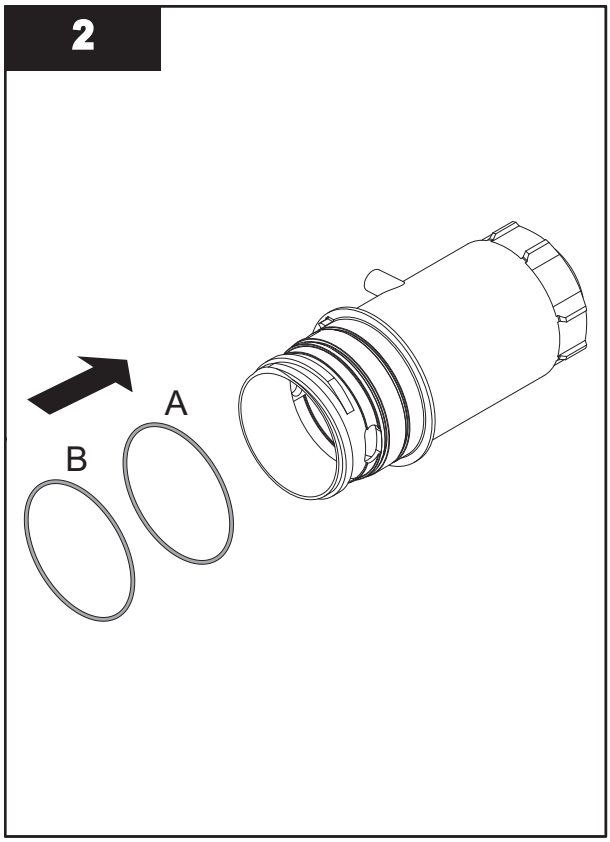

Note: *Verify the wiper bushing is installed in the correct orientation.*

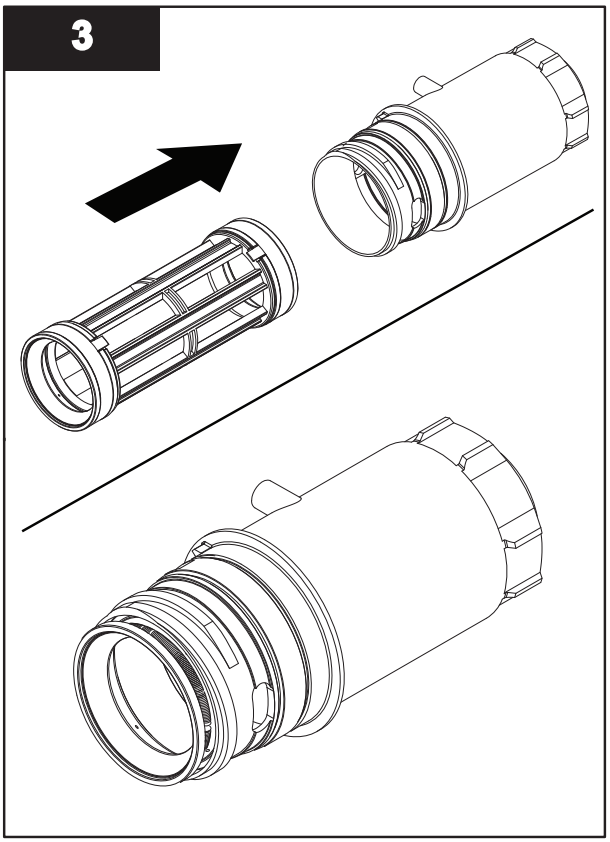

4. Install Wiper Canister (Section 9.7.4).

9.8 Hydraulic System Center (HSC)

9.8.1 Inspect the HSC

Inspect the HSC during scheduled maintenance.

Prerequisites:

- Lockout Tag Out - HSC for the associated UV Bank. Refer to Section 4.
- Open HSC lower door.

Materials:

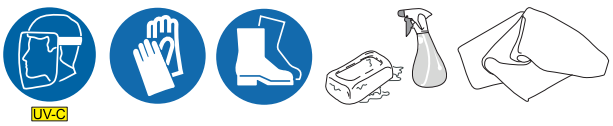

Procedure:

1. Inspect the HSC, hoses, filter and fittings for hydraulic fluid leaks. If a leak is visible at the:
   a. Hydraulic Fitting - tighten the hydraulic fitting (Section 9.8.5). Do not over-tighten fittings.
   b. Hydraulic Hose – inspect the hydraulic hoses for damage (bulges, splits, cracks and nicks), replace if damaged (Section 9.8.5).

c. Hydraulic Filter – turn the filter to tighten, if leak is still present:

   a. Remove the filter (Section 9.8.3).

   b. Remove debris from sealing surfaces of the filter and filter housing, using a clean dry cloth.

   c. Inspect sealing surfaces for damage, replace if damaged (Section 9.8.3).

   d. Ensure the O-ring is correctly positioned and free of damage, replace if required.

   e. Install the filter (Section 9.8.3).

2. Verify the hydraulic fluid reservoir is full. Fill up reservoir if required (Section 9.8.4).
3. Remove debris and hydraulic fluid from the HSC surfaces. Use a mild soap and water solution and sponge or soft cloth.
4. Close HSC lower door.

9.8.2 Depressurize Hydraulic System

Prerequisites:

- Shutdown the system. Refer to Section 5.2.
- Lockout Tag Out - HSC for the associated UV Bank. Refer to Section 4.
- Open HSC lower door.

Materials:

Procedure:

Before Service:

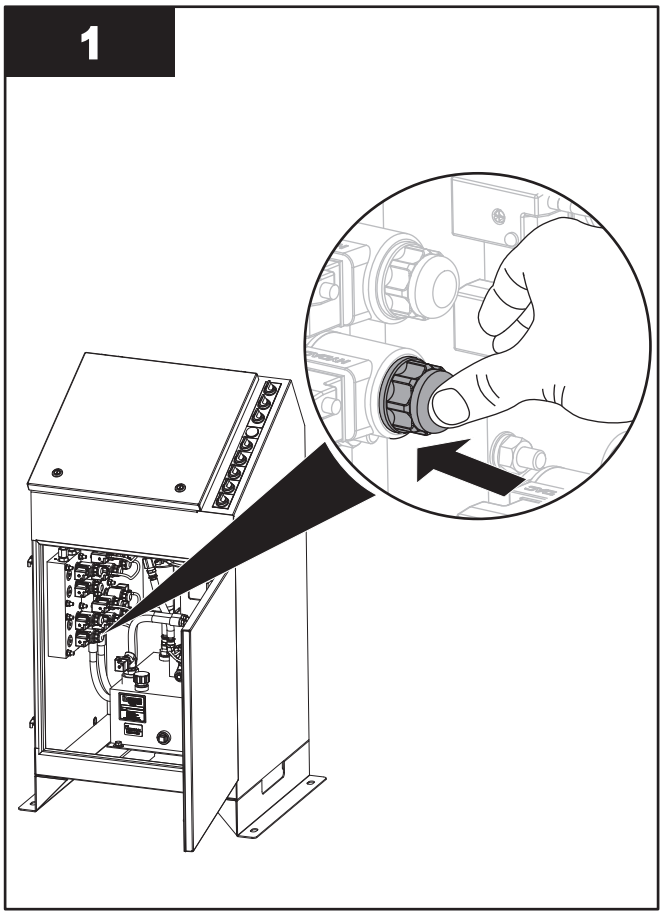

Note: *Push in the Extend, the Retract and the Lift valve buttons for each UV Bank requiring service.*

9.8.3 Replace the Hydraulic Fluid Filter

Replace the hydraulic fluid filter during scheduled maintenance or when damaged.

Prerequisites:

- Depressurize Hydraulic System. Refer to Section 9.8.2.

Materials:

- Hydraulic fluid filter

Procedure:

Replace:

1

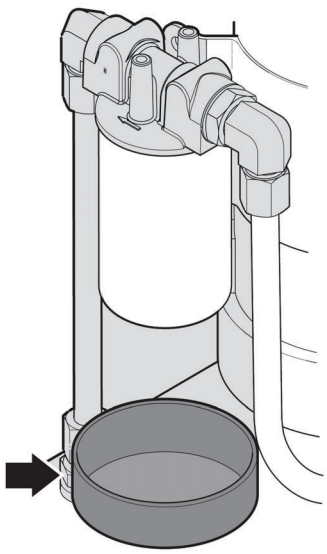

2

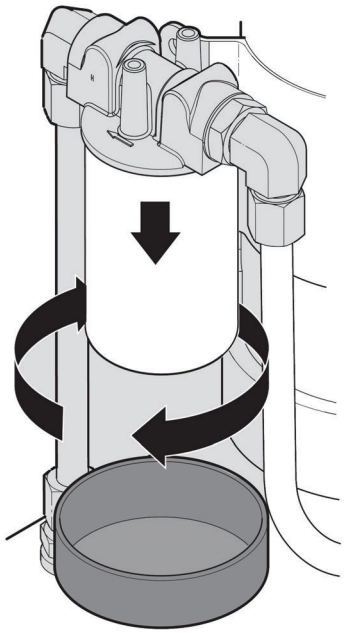

3

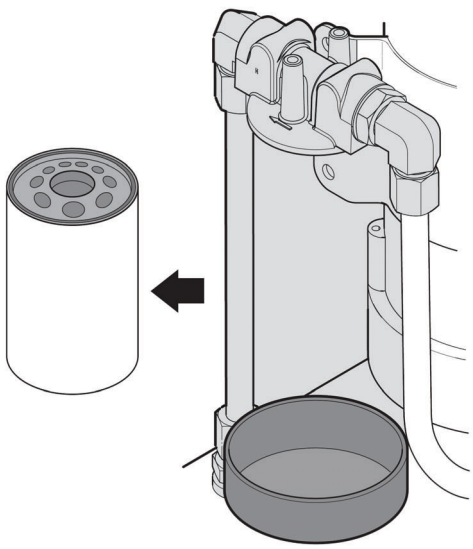

4

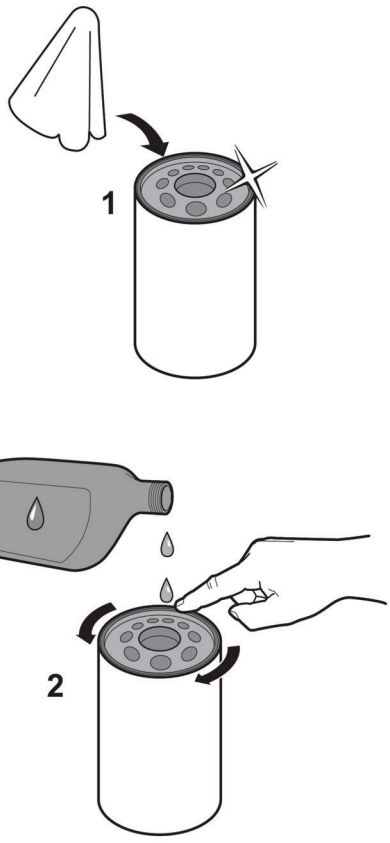

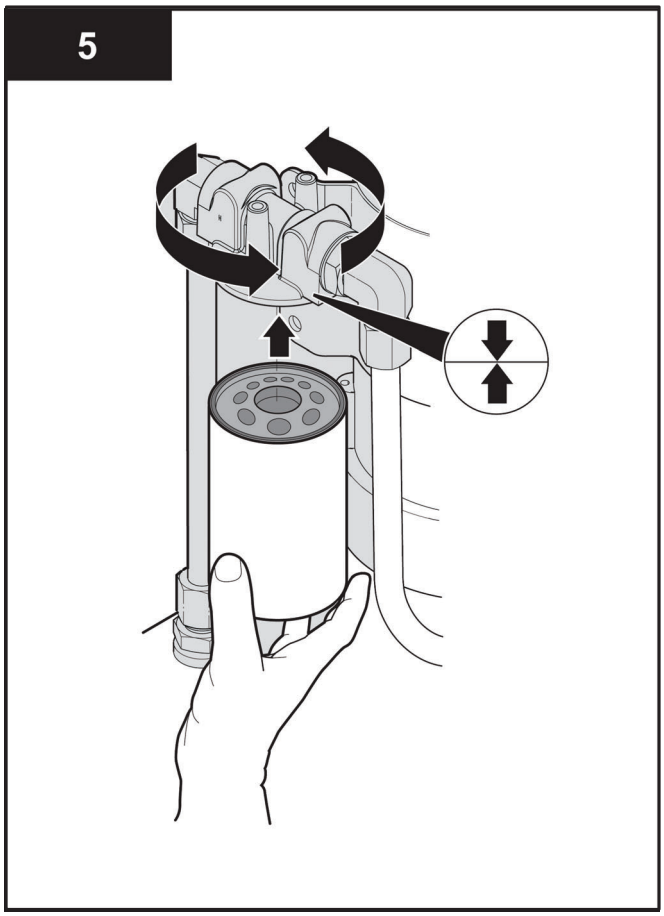

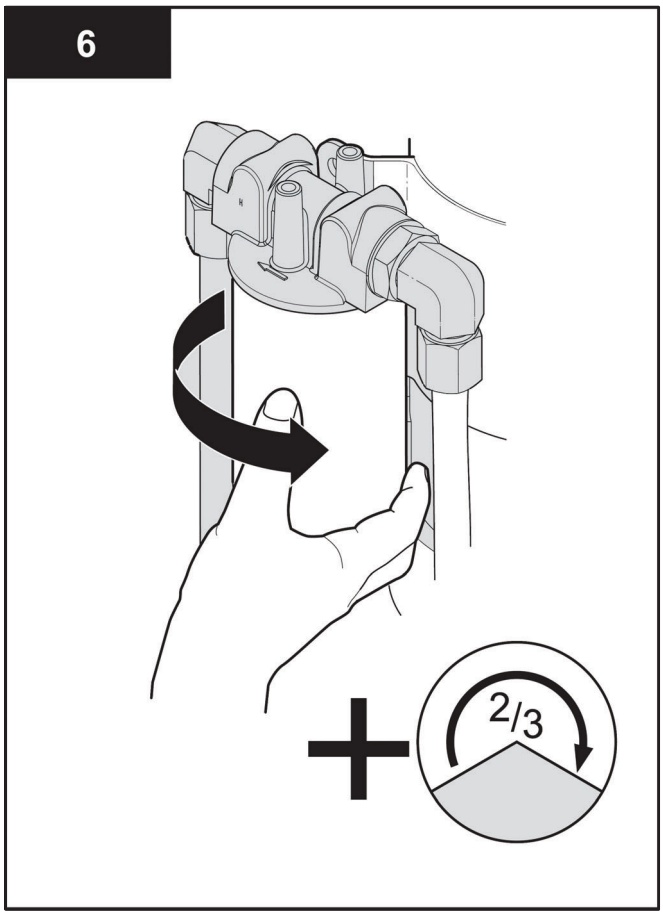

7. Fill up Hydraulic Fluid (Section 9.8.4).
8. Check for leaks, repair as required. Clean up spills.

When service is complete, assemble the prerequisites in the reverse order of disassembly.

9.8.4 Drain and Fill the Hydraulic Fluid Reservoir

Drain the hydraulic fluid reservoir during schedule maintenance. During the first two months of operation, air works its way out of the UV system. Hydraulic fluid must be monitored to make sure the fluid level is adequate.

Fill the hydraulic fluid reservoir when the level is less than full.

NOTICE

Use only a Trojan approved hydraulic fluid. Refer to the reservoir label for more information.

Table 8 Approved hydraulic fluids

Fluid type	Description and use	Operating temperature
Mineral Hydraulic Oil	• A low viscosity mineral-based oil • Use where wide variations in ambient temperatures occur. • Use all year. No seasonal oil change necessary.	-35 to 49°C (-32 to 120.2°F)
PureDrive Hydraulic Oil	• Water soluble, biodegradable • Use where wide variations in ambient temperatures occur. • Use all year. No seasonal oil change necessary.	-35 to 49°C (-32 to 120.2°F)

Note: *Refer to the reservoir label for more information.*

Prerequisites:

- Depressurize Hydraulic System. Refer to Section 9.8.2.

Tools:

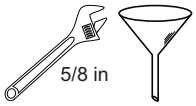

- Pump assembly optional (by others)

Materials:

Procedure:

Drain:

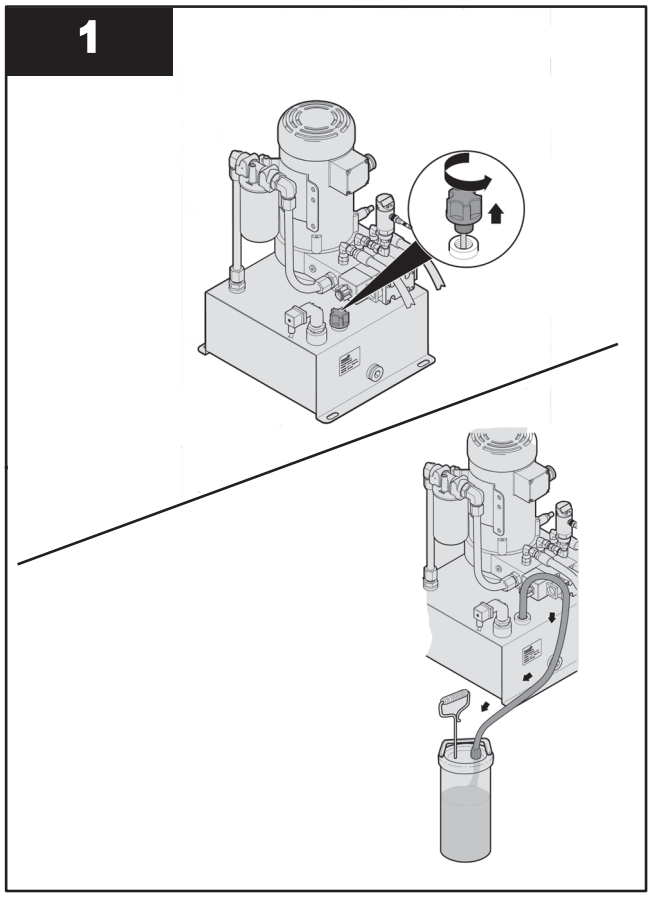

Note: *Dispose the waste oil according to local regulations.*

Fill:

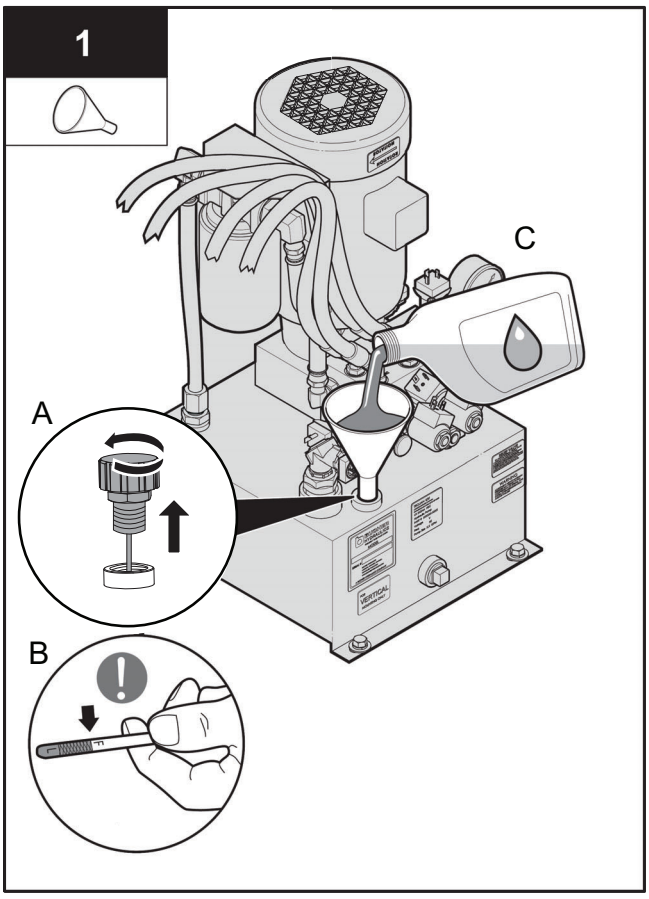

Note: *Clean up spills.*

When service is complete, assemble the prerequisites in the reverse order of disassembly.

9.8.5 Replace a Hydraulic Hose

Prerequisites:

- Shutdown the UV Bank. Refer to Section 5.2
- Lockout Tag Out - HSC for the associated UV Bank. Refer to Section 4.
- Depressurize Hydraulic System. Refer to Section 9.8.2.

Tools:

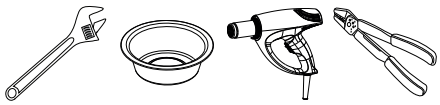

Materials:

- Hydraulic hose

Procedure:

1. Disconnect the hydraulic hose that is damaged.
2. Drain the hose into container.
3. Remove the damaged hydraulic hose from the cable management bracket, and the spiral wrap or cable track. Discard the damaged hose.
4. Connect the new Hydraulic Hose. Refer to Section 7.9.1.

   Note: *If multiple hoses need to be replaced, replace one at a time to avoid connecting the hose to incorrect port. Label each hose before disassembling.*
5. Install the hose into the Cable Management Bracket. Refer to Figure 9.
6. Install the hose into the spiral wrap or cable track for the applicable UV Bank.
7. Complete the Hydraulic Hose Fittings and Connections. Refer to Section 7.11.1.
8. Bleed the Hydraulic Hose. Refer to Section 7.11.2.

9.9 Hydraulic Cylinders

9.9.1 Grease a Wipe Hydraulic Cylinder

Add grease to the wipe hydraulic cylinder during scheduled maintenance or before extended system shutdown and during startup after extended periods of time. The lift hydraulic cylinder does not require to be greased.

Prerequisites:

- Lift the UV Bank Up - Install the UV Bank locking plates. Refer to Section 8.1.2. Replace grating section(s).
- Spray the Lamp Sleeves with clean water.

- Move the wiper plate to below the baffle plate. Refer to Section 8.1.4.
- Lockout Tag Out - HSC and PDC compartment for the associated UV Bank. Refer to Section 4.
- Depressurize the Hydraulic System. Refer to Section 9.8.2.

Tools:

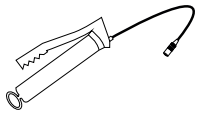

Materials:

Procedure:

Grease:

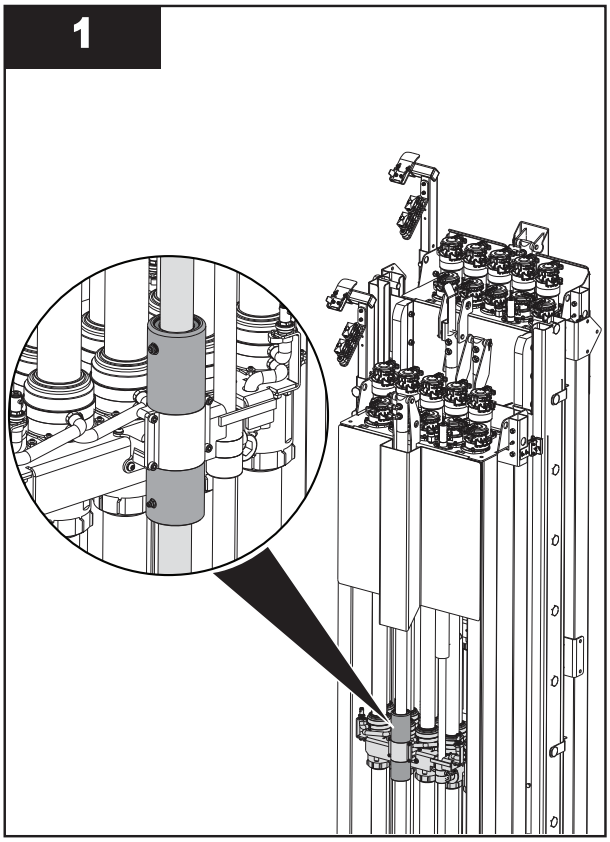

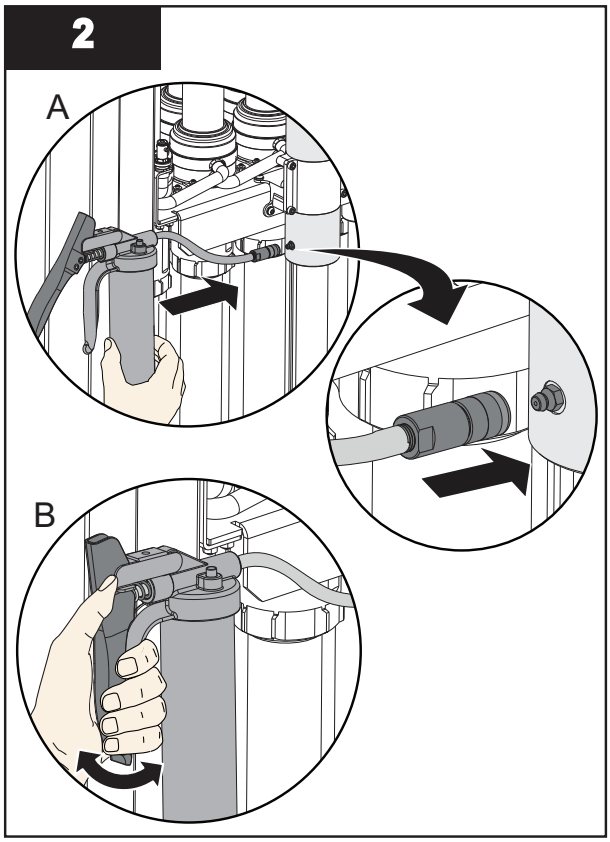

Notes: *1) Support the hydraulic cylinder when greasing to prevent movement.*
2) Clean up excess grease.

3. Remove the HSC lockout. Refer to Section 4.
4. Complete a full retract and extend of the wiping cylinder.

9.9.2 Remove and Replace Wipe Hydraulic Cylinder

Prerequisites:

- Lift the UV Bank Up - Install the UV Bank locking plates. Refer to Section 8.1.2. Replace grating section(s).

- Spray the Lamp Sleeves with clean water.
- Move the wiper plate to below the baffle plate. Refer to Section 8.1.4.
- Lockout Tag Out - HSC and PDC compartment for the associated UV Bank. Refer to Section 4.
- Depressurize the Hydraulic System. Refer to Section 9.8.2.
- Ensure wiper plate is supported to the UV Bank frame.

Tools:

Materials:

- Cable ties (by others)
- Short Hose (by others)

Procedure:

Remove:

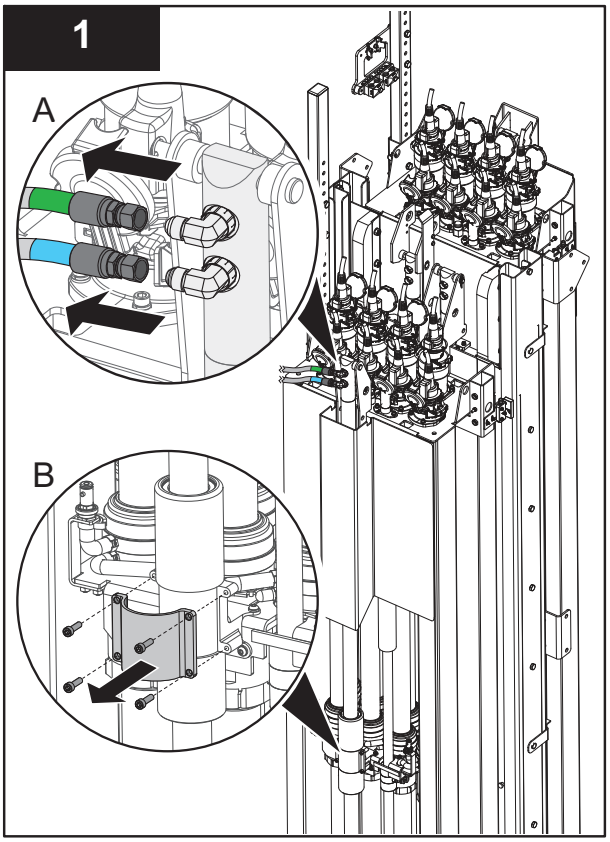

Note: *Place loose hose ends into a bucket.*

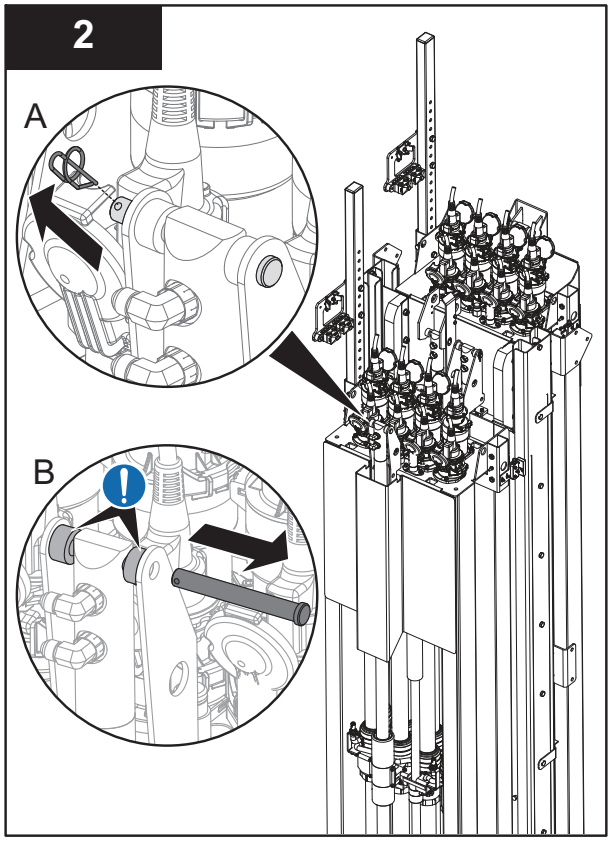

Notes: *1) Do not allow the bushings fall into the UV Channel.*
2) Support the hydraulic cylinder while removing the anchoring pin.

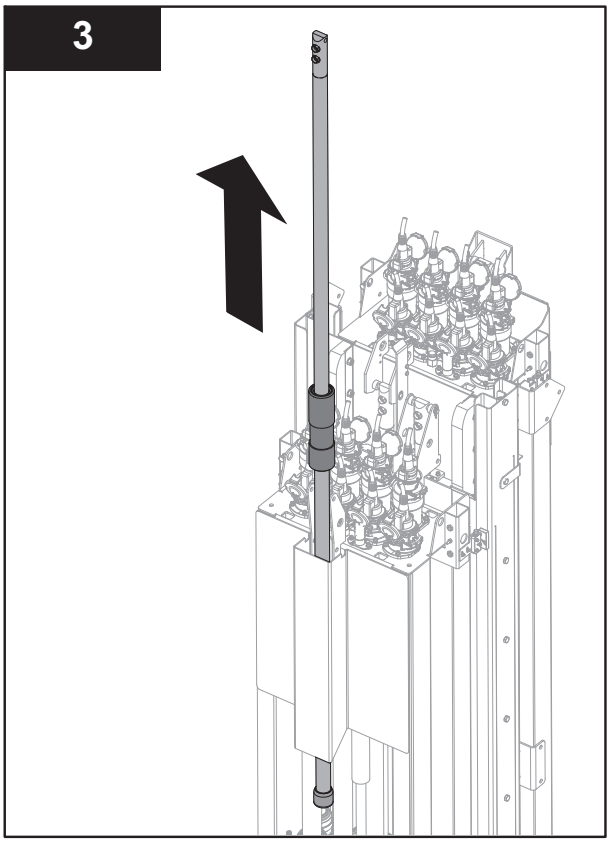

Install:

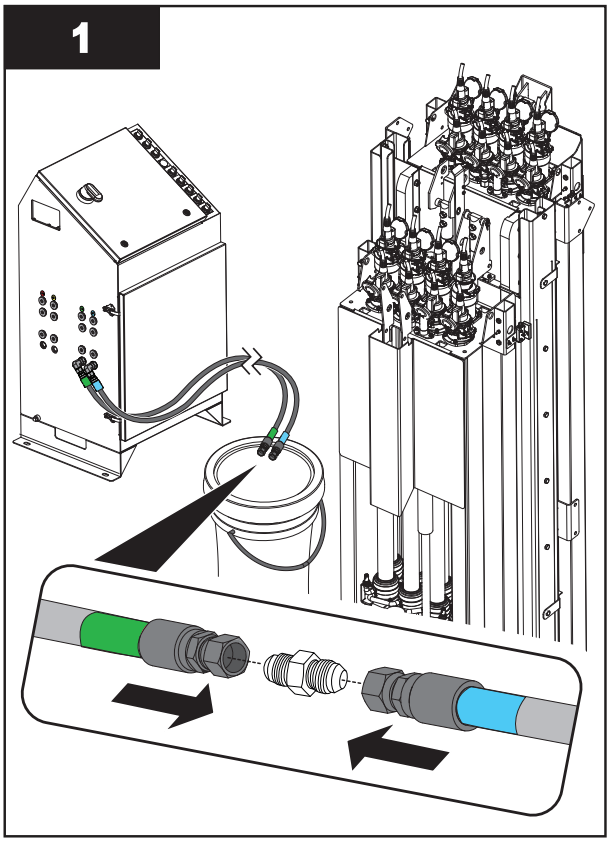

Notes: *1) Connect the Wiper Extend Hose (i.e. Green) and Wiper Retract Hose (i.e. Blue) together with the provided union to create a closed circuit.*
2) Remove the HSC lockout (Section 4).

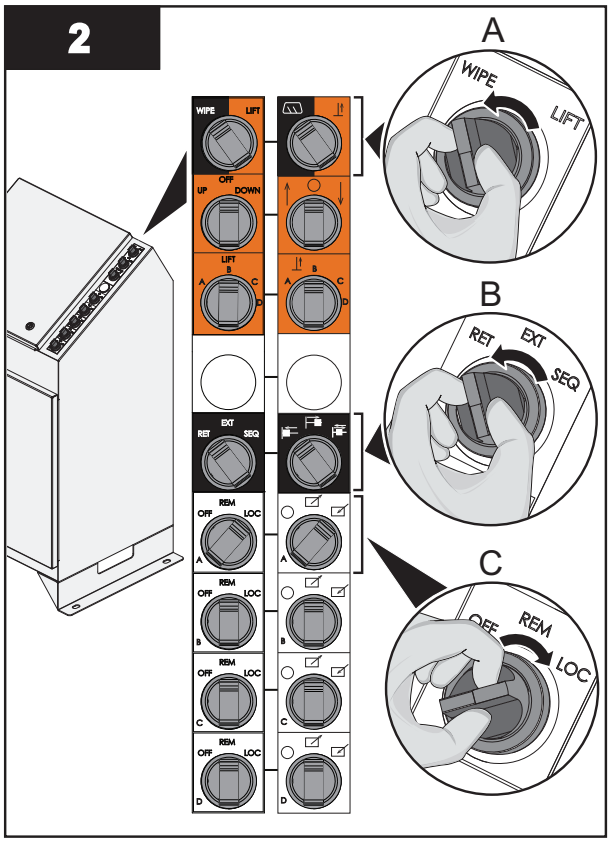

Notes: *1) Bank A is shown as an example only. Select appropriate UV Bank Wiper Mode Switch.*
2) Operate the hydraulic pump for 2 minutes or until a solid stream of fluid is coming back into the HSC reservoir.
3) Check hydraulic fluid levels, add fluid as required (Section 9.8.4).

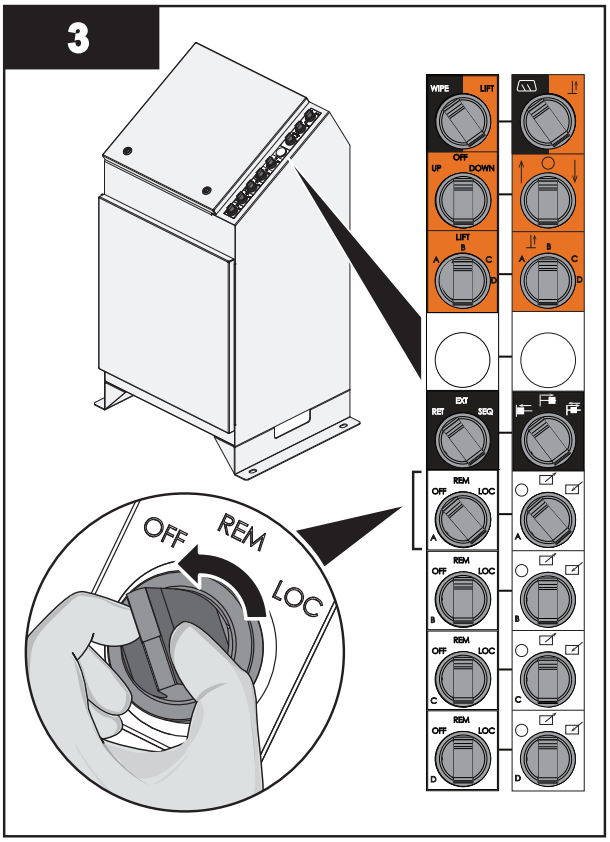

Notes: *1) When complete, turn the Wiper Mode Switch to OFF position.*
2) Depressurize the hydraulic circuit. Refer to Section 9.8.2.

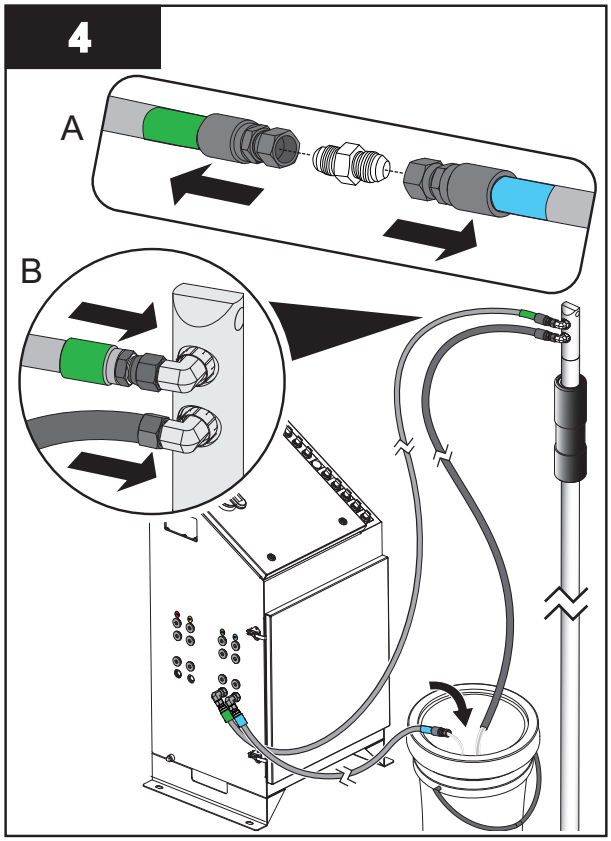

Notes: *1) Connect the Wiper Extend Hose (i.e. Green) to the new Wipe Cylinder.*
2) Connect a short hose to the Wiper Retract Fitting on the Wipe Cylinder and route the opposite end to the bucket.
3) Route Wiper Retract Hose (i.e. Blue) to the bucket.

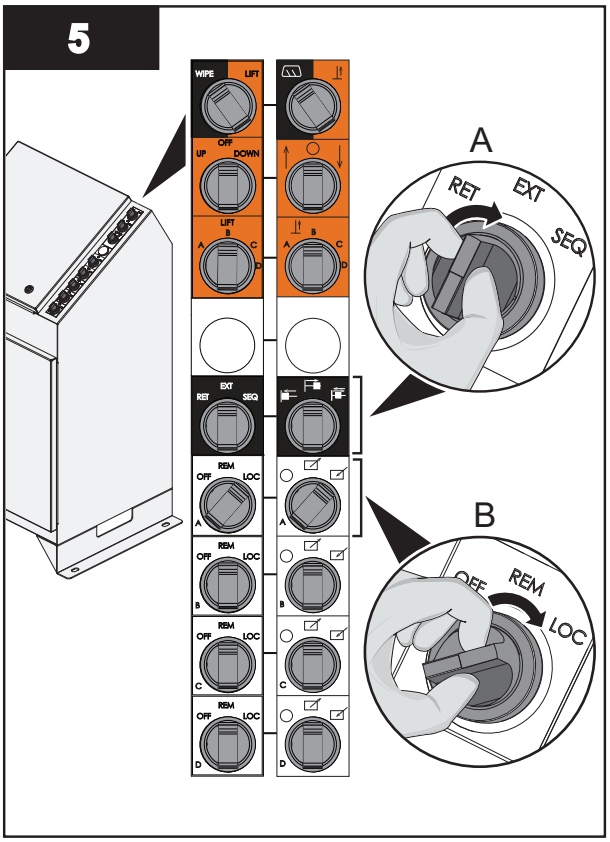

Notes: *1) Operate the hydraulic pump until the follower reaches the bottom.*
2) Check hydraulic fluid levels, add fluid as required (Section 9.8.4).

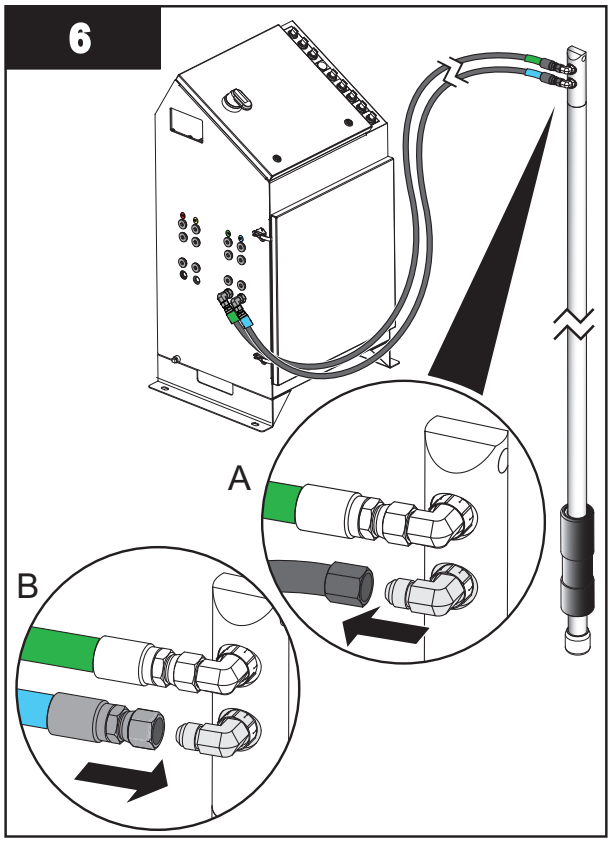

Note: *Connect the Wiper Retract Hose (i.e. Blue) to the Wipe Cylinder.*

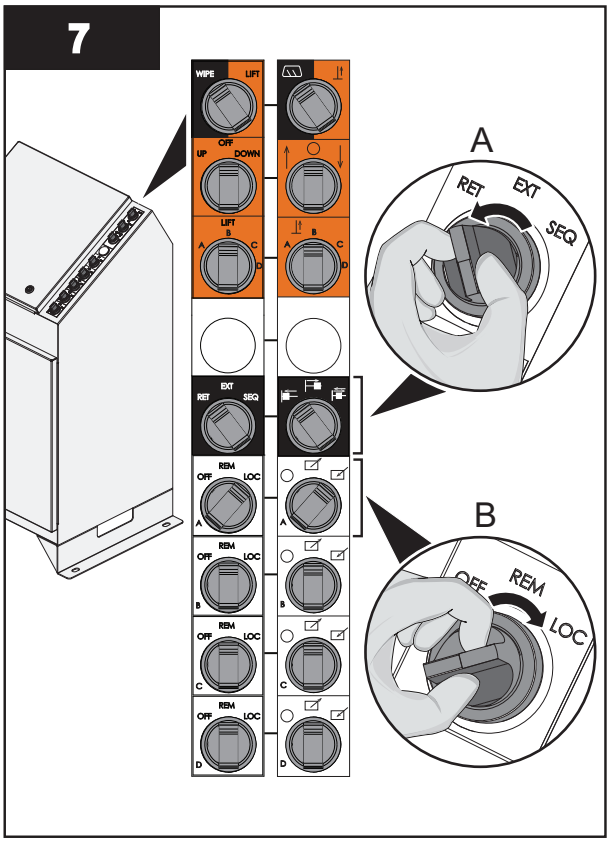

Note: *Operate the hydraulic pump until the follower reaches the top.*

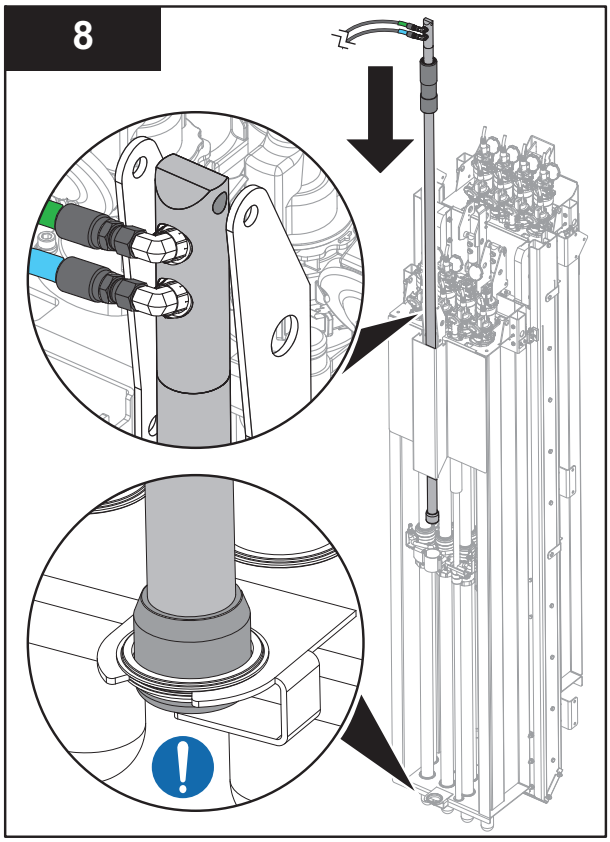

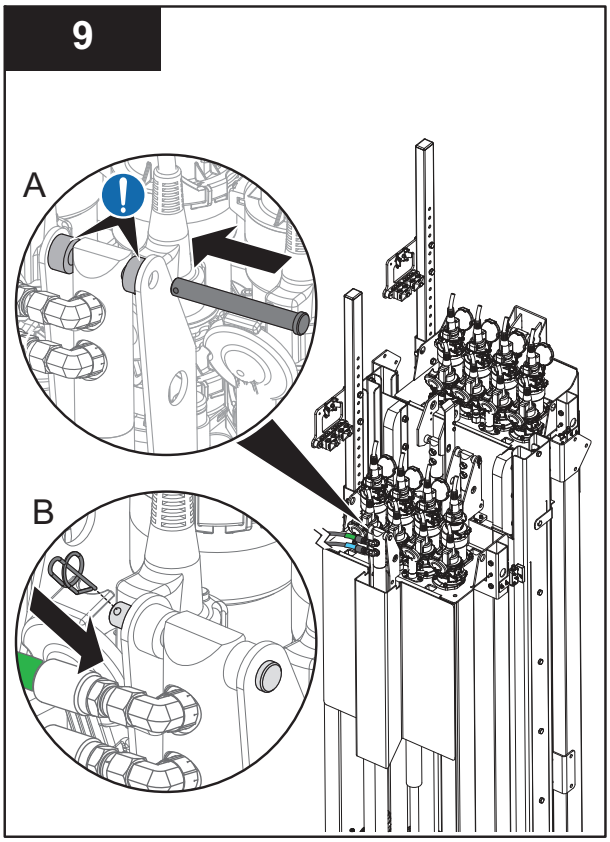

Note: *Carefully place the bushings on each side of the cylinder.*

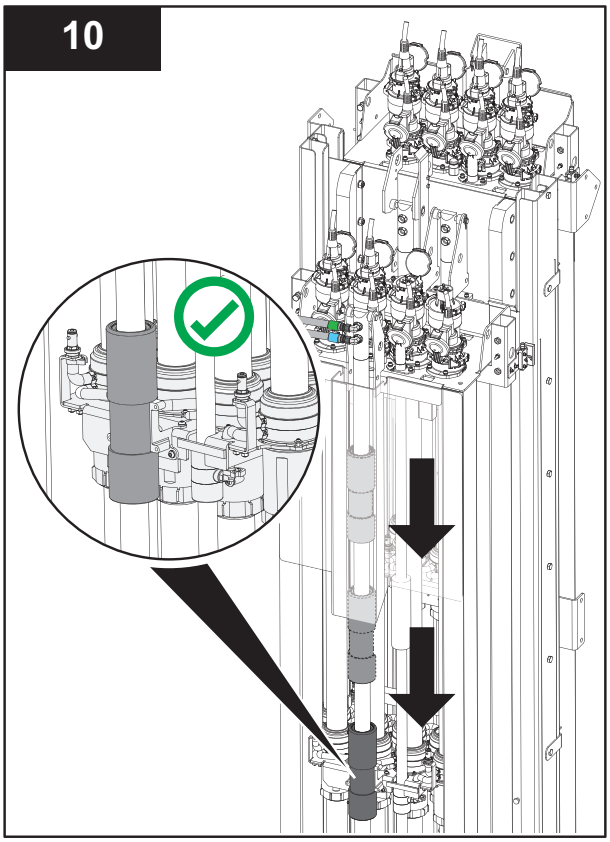

Note: *Manually move the cylinder follower until it lines up with the wiper plate (Section 8.1.4).*

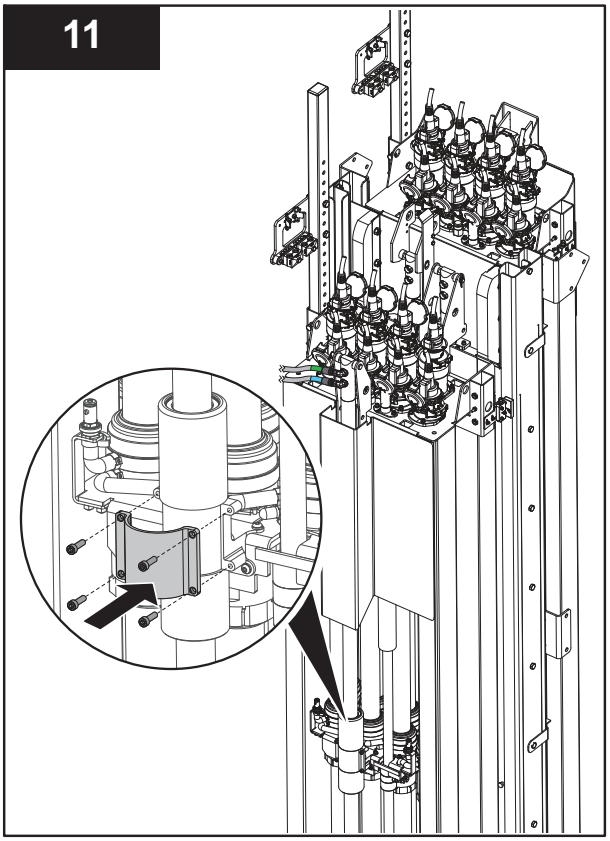

Note: *Apply anti-seize to the fasteners on wiper plate.*

12. Perform the same procedure for the other cylinder.

13. Perform prerequisites in reverse order of disassembly.

9.9.3 Remove and Replace Lift Hydraulic Cylinder

Prerequisites:

- Shutdown the associated UV Bank. Refer to Section 5.2.
- Lift the UV Bank Up - Install the UV Bank locking plates. Refer to Section 8.1.2. Replace grating section(s).
- Lockout Tag Out - HSC and PDC compartment for the associated UV Bank. Refer to Section 4.
- Depressurize Hydraulic System. Refer to Section 9.8.2.

Tools:

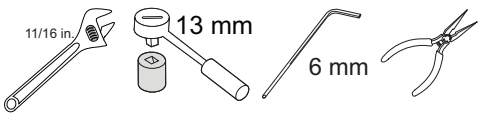

Materials:

- Short Hose (by others)

Procedure:

Remove:

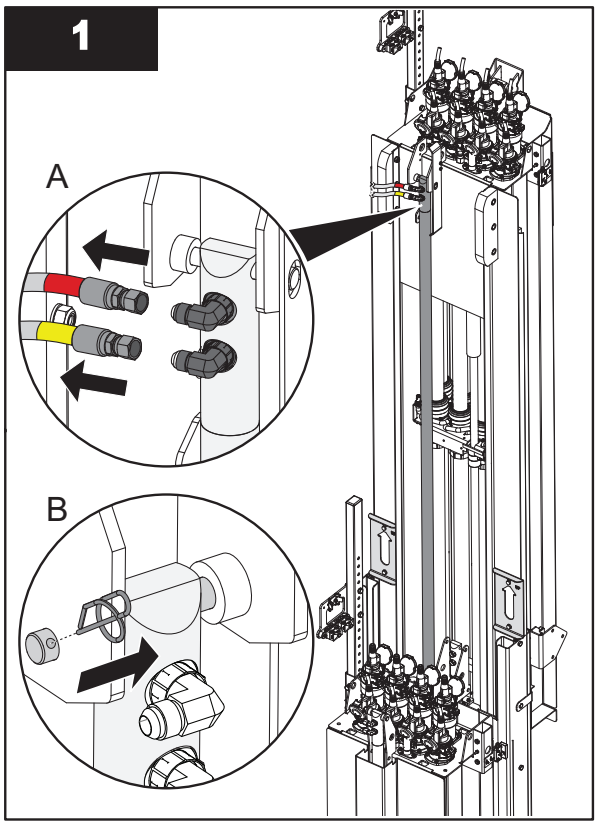

Note: *Place loose hose ends into bucket.*

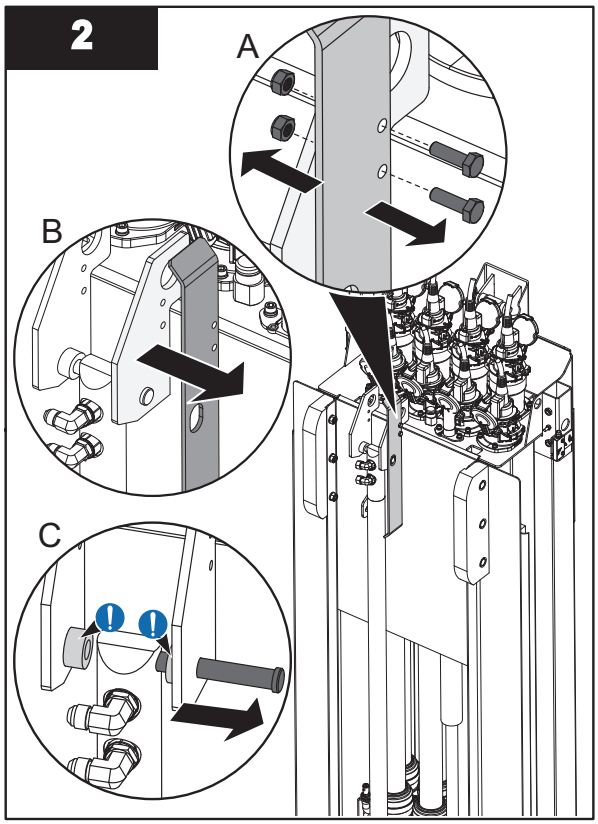

Note: *Do not allow the bushings fall into the UV Channel.*

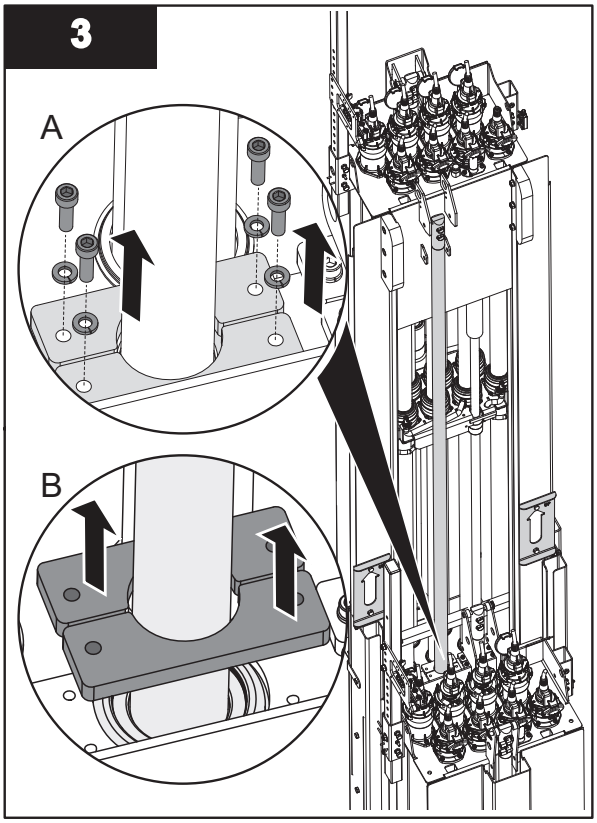

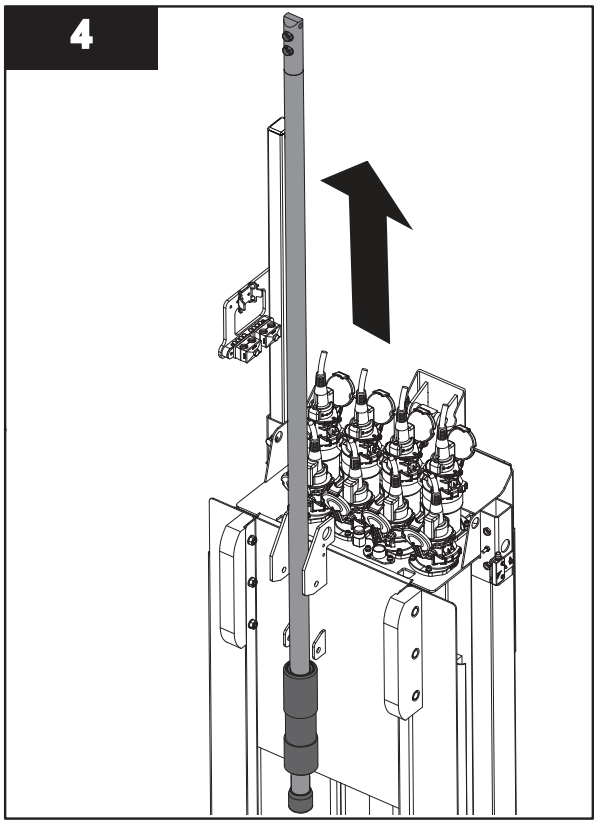

Install:

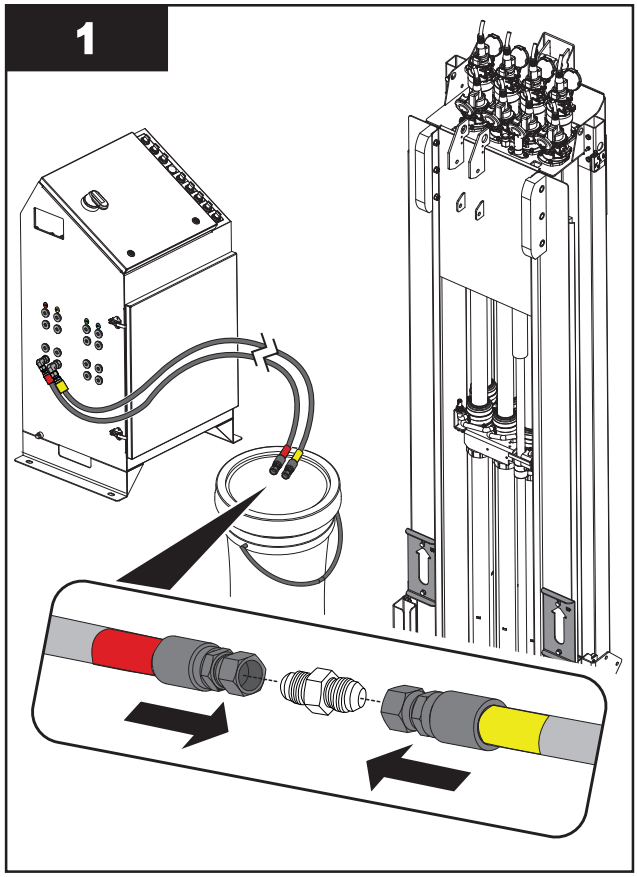

Notes: *1) Connect the Lift Extend Hose (i.e. Red) and Lift Retract Hose (i.e. Yellow) together with the provided union to create a closed circuit.*
2) Remove the HSC Lockout (Section 4).

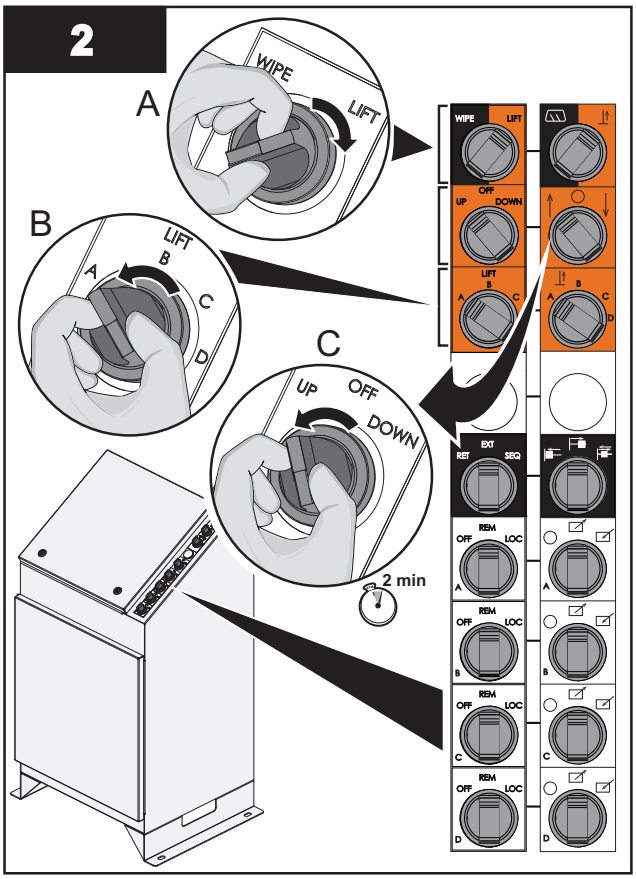

Notes: *1) Bank A is shown as an example only. Select the required UV Bank using the Lift UV Bank Selection Switch.*
2) Operate the hydraulic pump for 2 minutes or until a solid stream of fluid is coming back into the HSC reservoir.
3) Check hydraulic fluid levels, add fluid as required (Section 9.8.4).

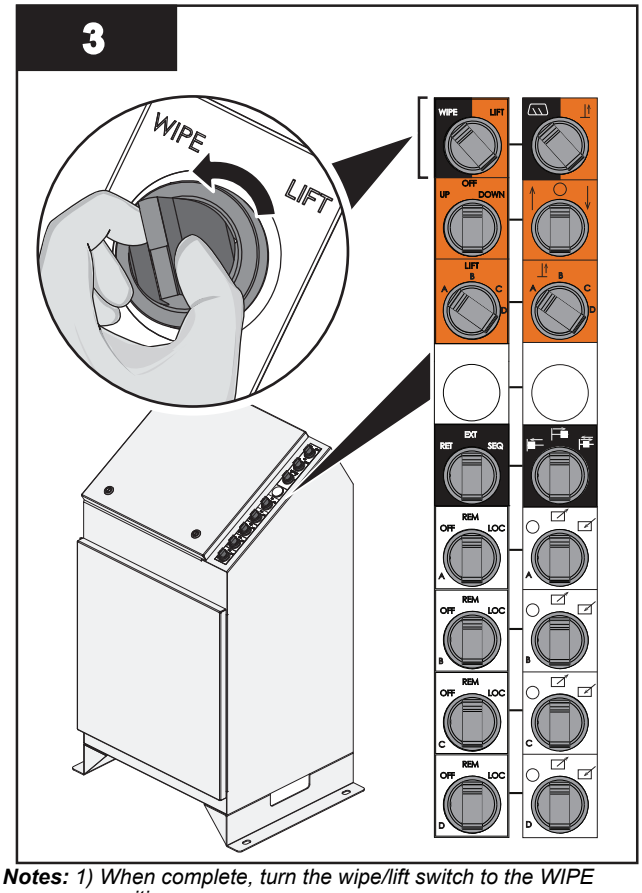

Notes: *1) When complete, turn the wipe/lift switch to the WIPE position.*
2) Depressurize the hydraulic circuit. Refer to Section 9.8.2.

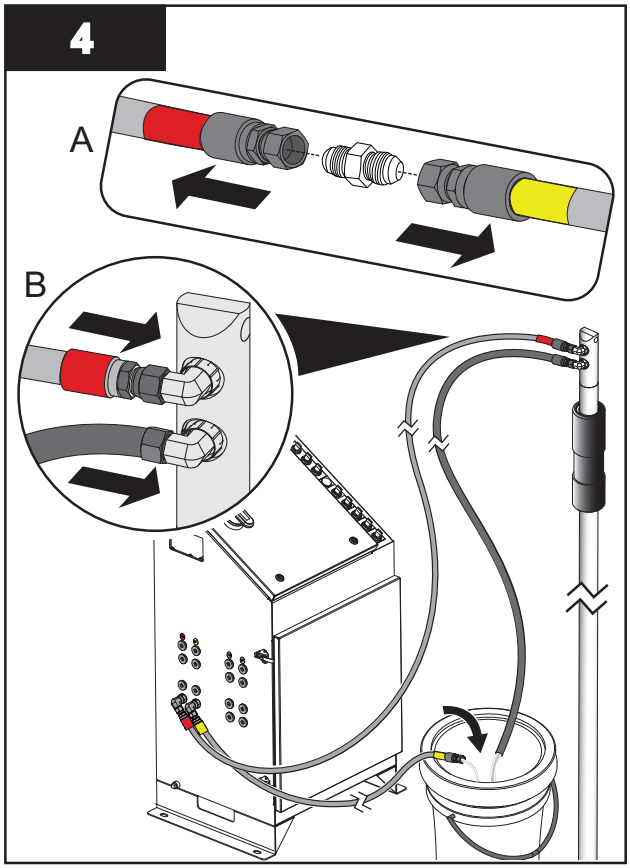

Notes: *1) Connect the Lift Extend Hose (i.e. Red) to the new Lift Cylinder.*
2) Connect a short hose to the Lift Retract Fitting on the Lift Cylinder and route the opposite end to the bucket.
3) Route Lift Retract Hose (i.e. Yellow) to the bucket.

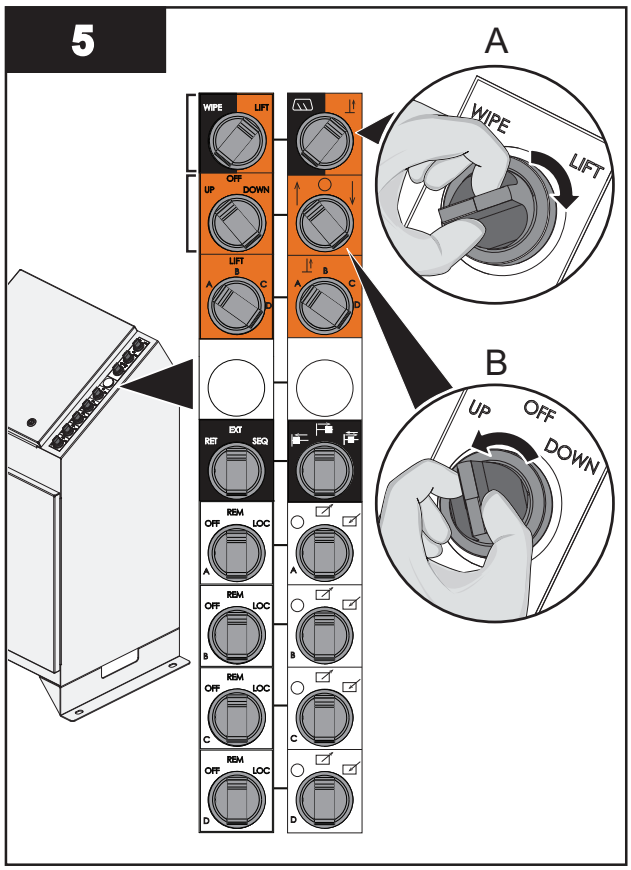

Note: *Operate the hydraulic pump until the follower reaches the bottom.*

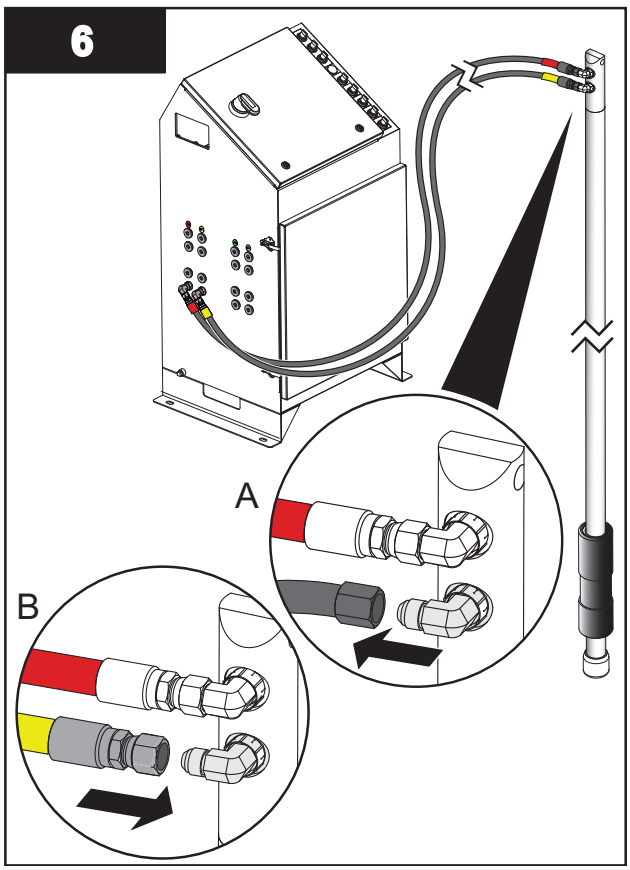

Note: *Connect the Lift Retract Hose (i.e. Yellow) to the Lift Cylinder.*

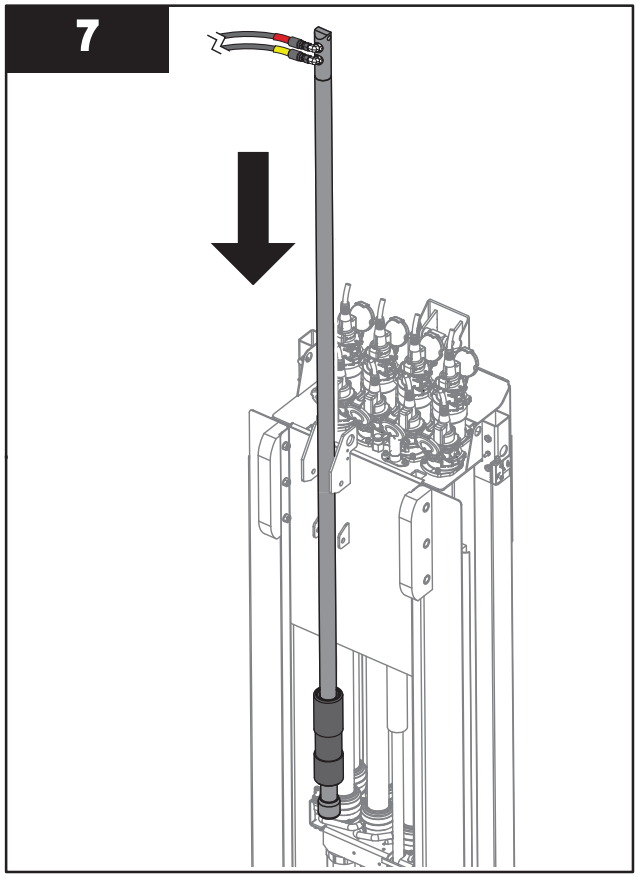
7

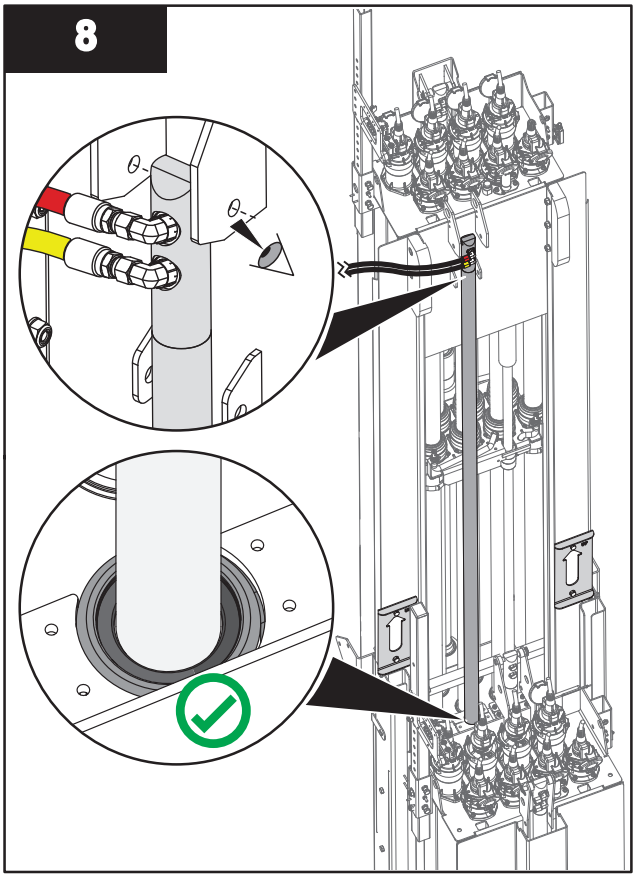
8

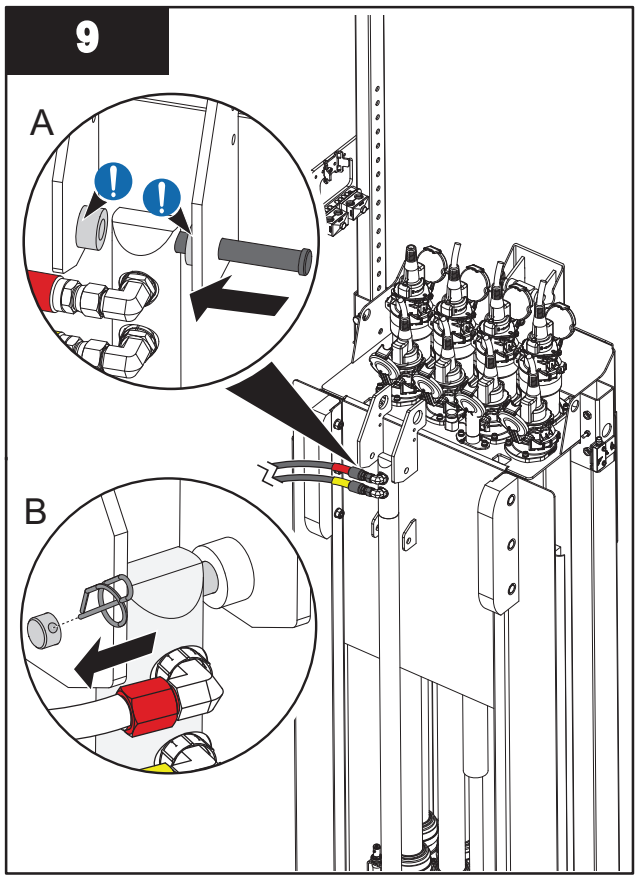
9
A
B

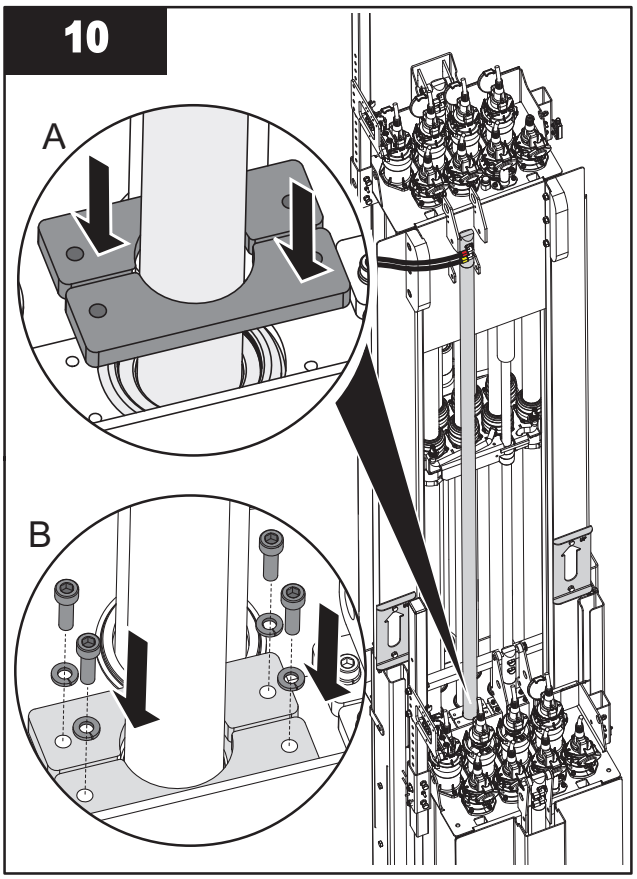
10
A
B

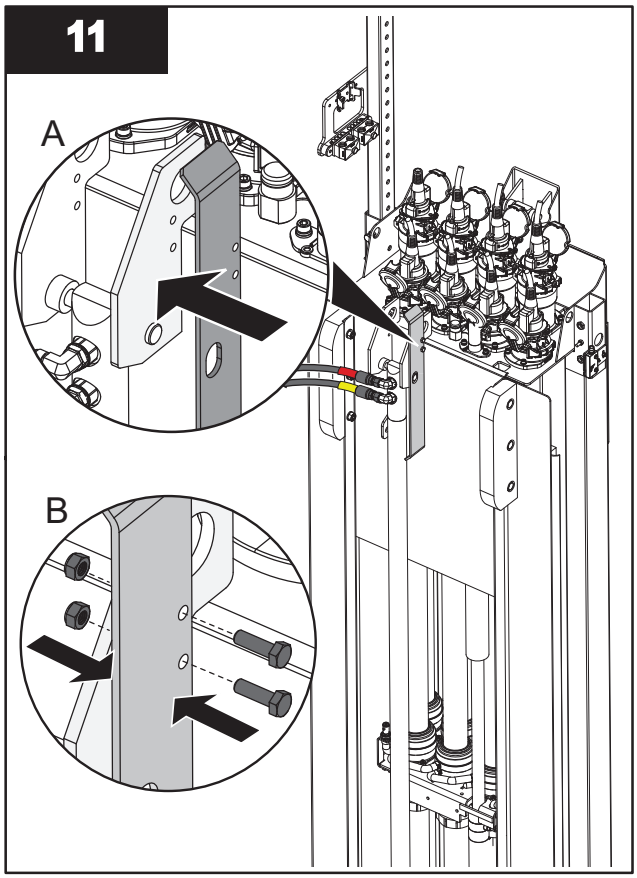

Note: *Lift the UV Bank Down (Section 8.1.2).*

9.10 Power Distribution Center (PDC)

9.10.1 Replace a UV Lamp Driver

The lamp drivers are located inside the PDC. Each lamp driver provides power to two UV lamps.

Prerequisites:

- Disconnect PDC for the associated UV Bank.
- Lockout Tag Out - PDC compartment. Refer to Section 4.
- Wait 5 minutes for stored energy to dissipate.
- Record the number that is selected on each rotary switch on the front panel of the lamp driver (address switches).

Tools:

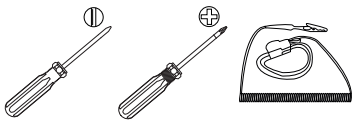

Materials:

- New Lamp driver

Procedure:

Remove / Replace:

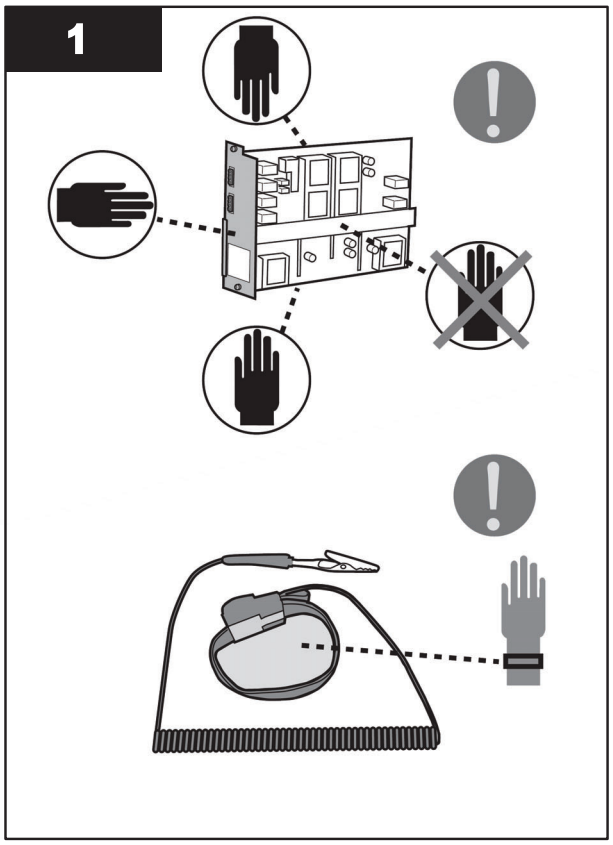

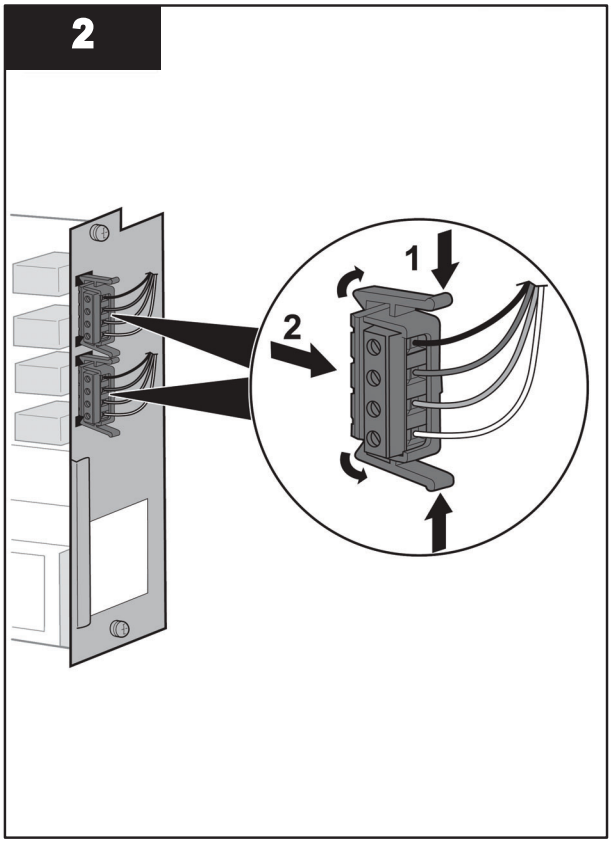

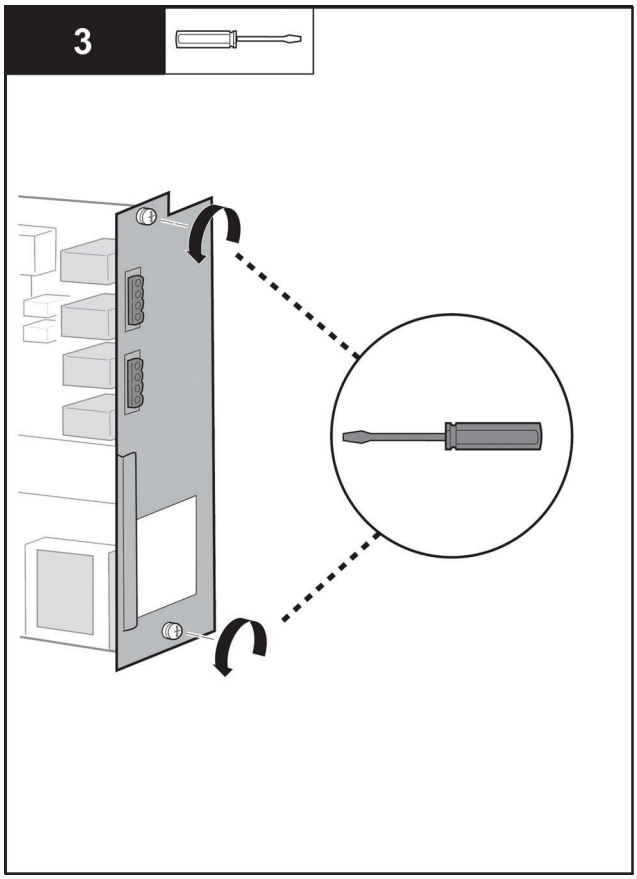

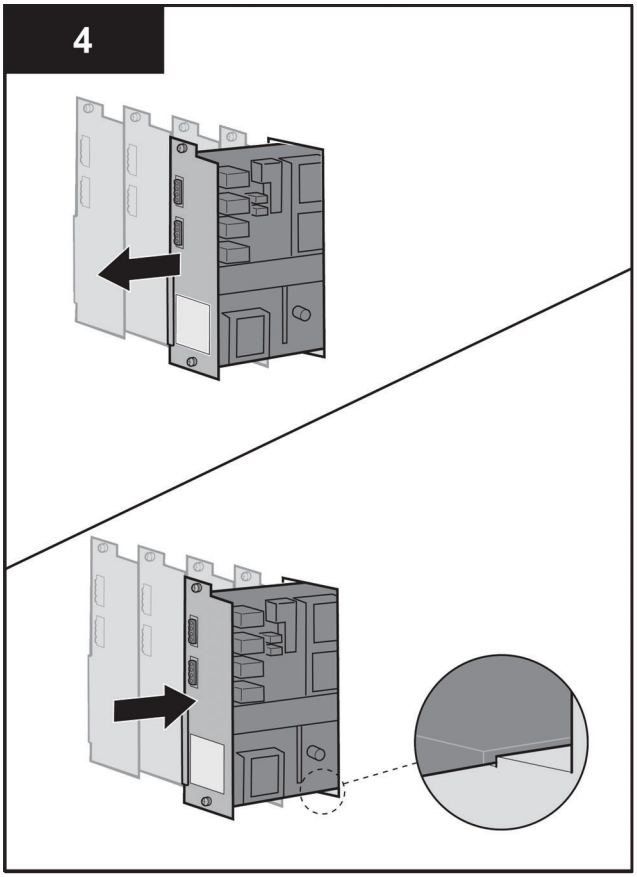

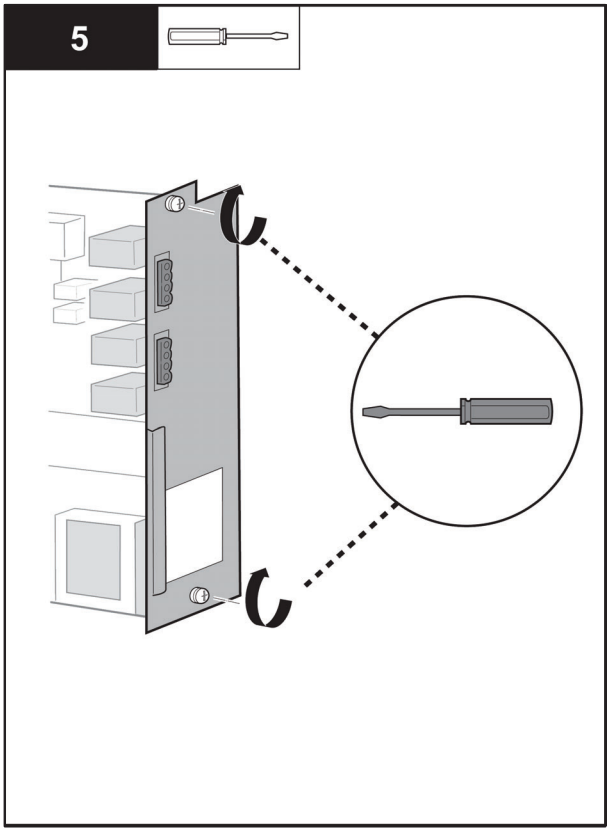

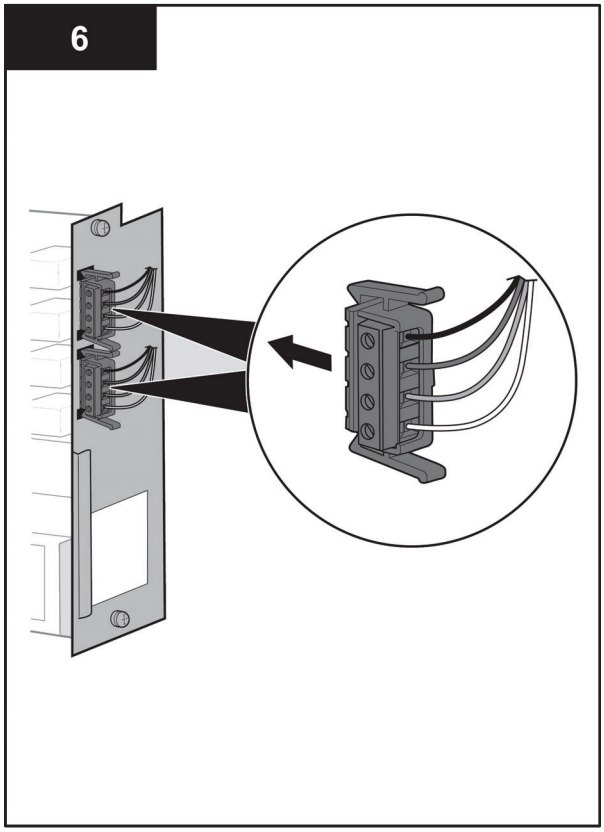

Note: *Verify the connector is fully engaged.*

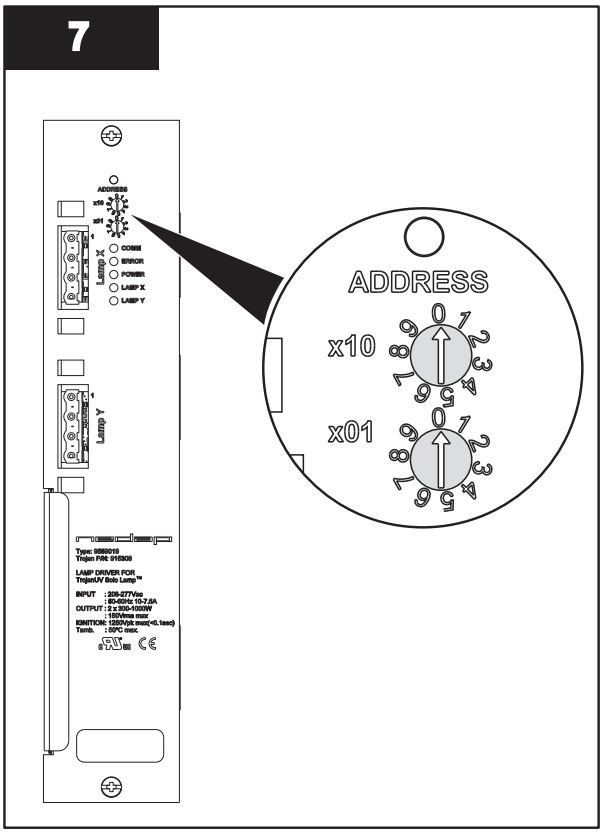

Note: *Change the Rotary Switch addresses on the new Lamp Driver to match the addresses on the removed Lamp Driver.*

When service is complete, assemble the prerequisites in the reverse order of the disassembly.

9.10.2 Clean the AC Filter

Materials:

Procedure:

1. Push or pull to slide the filter out from either side of the Air Conditioner unit.
2. Flush the filter with warm water from the exhaust side to the intake side.

   Note: *DO NOT use caustics.*
3. Allow filter to dry completely prior to installation.

   Note: *Place the corner down to assure that water completely drains.*

Section 10 Troubleshooting

DANGER

Obey all warning and caution statements. Refer to Section 2.

Read and understand this Operation and Maintenance Manual before operating this equipment. Read all user documentation before performing operations, inspections, repair, or maintenance on this equipment.

Only competent personnel should undertake operation, repairs, maintenance, or servicing of equipment described in this section of the manual. If you do not understand the information or procedure explanations in this manual, STOP and contact your Service Provider for assistance.

NOTICE

Injury or damage to the equipment caused by incorrect testing or maintenance is not covered under the warranty of the manufacturer and is the responsibility of the individual doing the troubleshooting. If there is any question about a procedure, contact your local Service Provider before doing the procedure.

Current active alarms are shown in the Alarm Status screen. The 100 most recent alarms that need attention are listed. Once an alarm condition is corrected, the alarm is removed from the list.

An archived history of alarms is shown in the Alarm History screen. The last 100 alarms are listed in the alarm buffer. When the buffer is full, the oldest alarm will be deleted from the archive.

All UV system alarms are displayed on the alarm status screen when active. Most of the standard alarms are divided into three categories: critical (Table 9), major (Table 10) and minor (Table 11). Delay times for many alarms are user-adjustable.

For the best system operation, correct every alarm condition as it occurs.

When an alarm occurs, the UV system does what is necessary to:

- Keep the UV dose at the target UV dose (when in SCC AUTO mode)
- Prevent damage to the UV lamps, the PDC and the HSC

10.1 Resolving Alarms

10.1.1 Latched Alarms

To resolve latched alarms:

1. Resolve the cause of the latched alarm.
2. Reset the latched alarm:
   a. For PDC and UV Bank latched alarms (Section 8.3.4.5).
   b. For Inlet Gate latched alarms (Section 8.3.3.2).
   c. For Outlet Gate latched alarms (Section 8.3.3.3).
   d. For Not Enough Healthy Banks (NEHC) latched alarms (Section 8.3.2.4).
   e. For HSC and Wiper latched alarms (Section 8.1.5).

10.1.2 Non-Latched Alarms

To resolve non-latched alarms:

1. Resolve the cause of the alarm. Once the cause is removed, the alarm will resolve automatically.

10.2 SCC Alarms

10.2.1 Critical Alarms

Indicates that immediate attention is required. The UV system will partially or completely shut down until the fault is cleared. Alarms may be latched and require a reset from the HMI after the alarm condition is remedied.

Table 9 Critical Alarms

Alarm Description	Description
Bank Low Water Level	The water level sensor has detected a low water level condition. All banks with an active low water condition will be automatically shutdown.
Bank Not In Place (Latched)	The bank not in place proximity sensor indicates that the bank is not in place within the channel. At the relevant Bank Overview Screen, Reset the UV Bank Latched alarm (Section 8.3.4.5).
Channel Water Level Signal Fault	The 4-20 mA signal from the channel water level sensor is below 2 mA or above 20.5 mA.
Inlet gate fail to start opening (Latched)	The inlet gate has been requested to open but has failed to start opening. After the cause has been resolved, reset the Inlet Gate latched alarm (Section 8.3.3.2).
	The inlet gate is commanded to open but the Closed Limit Switch remains closed. After the cause has been resolved, reset the Inlet Gate latched alarm (Section 8.3.3.2).
PDC High Temperature Shutdown (Latched)	The PDC temperature has increased above the maximum limit of 55°C (130ºF). Once the heat has dissipated the secondary alarms will need to be reset. Reset the NEHC latched alarm (Section 8.3.2.4). Reset the UV Bank Latched alarm (Section 8.3.4.5).
SCC Run on UPS (optional)	The UV System has experienced a power loss and the SCC is operating on the UPS battery which will allow the Operator to shutdown the UV system properly.

10.2.2 Major Alarms

Indicates that immediate attention is required, otherwise damage may occur or performance may be compromised. The UV system does not shutdown, however, control actions may be taken to achieve proper equipment operation.

Table 10 Major Alarms

Alarm Condition	Description
Bank configuration mismatch	Bank and HMI settings do not match.
Channel High Water Level	Channel water level is above the high set point.
Controller Fault	A PLC controller/module fault exists.
Flow Meter Fault	The current measure flow rate has dropped below the configured alarm limit for the configured alarm delay time.
High Flow - Out of Validation Range	Check Validation Range mode only – Flow is above High Flow Validation Range Set Point.
HSC Hydraulic Tank Low Level	The fluid low level switch has detected low hydraulic fluid within the HSC reservoir.
HSC Pump Fault (Latched)	The hydraulic pump fails to turn on/off when requested. After the cause has been resolved, reset the HSC latched alarm (Section 8.1.5).

Table 10 Major Alarms

Alarm Condition	Description
Inlet Gate Fail to Close (Latched)	Gate is commanded to close but the Open Limit Switch is not closed. After the cause has been resolved, reset Inlet Gate latched alarm (Section 8.3.3.2).
Inlet Gate Fail to Open (Latched)	Gate is commanded to open but the Open Limit Switch is not closed. After the cause has been resolved, reset Inlet Gate latched alarm (Section 8.3.3.2).
Inlet Gate Fail to Start Closing (Latched)	Gate is commanded to close but the Open Limit Switch remains closed. After the cause has been resolved, reset Inlet Gate latched alarm (Section 8.3.3.2).
Low Flow	Flow has dropped below the validated limit.
Low UV dose	Current calculated UV dose has dropped below the alarm limit entered on the Dose settings screen. The alarm limit is the percentage of the design dose that triggers the alarm. ***Note:*** *The system will request any available UV Banks to operate at 100% power. If the Low UV Dose alarm continues, reset the NEHC latched alarm or NEHB alarms (Section 8.3.2.4).*
Low UVT – Out of Validation Range	Check Validation Range mode only – UVT is below Low UVT Validation Range Set Point.
Multiple Lamp Failure (Latched)	Number of lamps failed equal or exceeds multiple lamp fail set point. After the cause has been resolved, reset UV Bank latched alarm (Section 8.3.4.5).
Not Enough Healthy Banks Available	The number of banks required to meet system dose are not available in the channel.
Not Enough Healthy Channel (NEHC) (Latched)	Not enough “healthy” channels of UV equipment available to ensure proper system performance. The controller will try to open all available channels (if slide gates are controlled) and turn on all available banks (all non-faulted banks, and banks with multiple lamps, multiple lamp driver or module communication faults) at full power. After the cause has been resolved, reset the NEHC latched alarm (Section 8.3.2.4).
Not Enough Healthy Lamps	All Banks lamps have failed to turned ON.
SCC-HSC Communication Fault	A HSC is not responding to polling from SCC.
SCC-PDC Communication Fault	A BCB is not responding to polling from the SCC.
UVI Sensor Fault	The 4-20 mA signal from the bank UVI sensor below 2 mA or above 20.5 mA.
UVI Sensor lower than expected fault (SBC) (Latched)	UV Intensity reading is lower than expected. After the cause has been resolved, reset UV Bank latched alarm (Section 8.3.4.5).
UVT meter fault	UVT analog signal below 2 mA or above 20.5 mA.
Weir Gate Fail to Move (Latched).	Gate is commanded to move but gate position not changing. After the cause has been resolved, reset the outlet gate latched alarm (Section 8.3.3.3).
Weir Gate Fault.	Gate is sending a discrete input that it is faulted. This could mean over-torque or other internal device failures.
Weir Gate Not in Remote Auto.	Weir gate is not in Remote Auto
Wiper Group Jammed (Latched)	The high pressure signal has been energized before the minimum wiper travel time, while the wiper is moving. After the cause is resolved, reset the Wiper latched alarm (Section 8.1.5).
Wiper Travel Time Exceeded (Latched)	The wiper has exceeded the maximum travel time while retracting or extending. The fault will have to be reset, at the faulted HSC turn the mode selector switch from remote to off and back to remote.

10.2.3 Minor Alarms

Indicates that the UV system requires maintenance but it is operating in compliance. Alarms are not latched and no reset is required. No other actions will be taken.

Table 11 Minor Alarms

Alarm Condition	Description
Bank Low Water Level Warning	Channel water level is below the low mechanical set point for less than the low water alarm time.
Bank Not In Remote Auto	The bank mode is not in remote auto and/or the PDC mode selector switch is not set to remote.
BCB DIP switch Mismatch Alarm	The BCB DIP switch setting does not match the expected value. Refer to Electrical Drawings for correct DIP Switch settings.
Channel Design Flow Exceeded	Channel Flow exceeds the maximum and wipe process will be inhibited.
Channel Flow Limit for Wiping exceeded	Channel Wipers Remote Wipe inhibited.
Channel Maximum Flow Velocity Exceeded	Channel Flow exceeds the maximum flow velocity set point.
Controller Low Battery	PLC low battery light has illuminated on the PLC.
Flow Meter Override Value Used	Manually entered Flow Override value is being used.
High UVT – Out of Validation Range	Check Validation Range mode only – UVT is above High UVT Validation Range Set Point.
HSC Remote Wipe Inhibited	Conditions exists that will not allow a remote wipe of any HSC wiper groups.
Inlet Gate Not In Remote Auto	Gate is not in Remote Auto.
Lamp Driver Communication Failure	Indicates a communication failure between the BCB and lamp driver(s).
Lamp Driver Failure	Indicates a lamp driver has failed.
Lamp Failure	One or more lamps have failed.
Lamp Lifetime Exceeded	One or more of the lamps in the system have exceeded the lamp lifetime set point.
Lift attempted with lamps energized	The UV Bank has been manually requested to lift while the UV Lamps in that UV Bank are energized.
Low Flow – Out of Validation Range	Check Validation Range mode only – Flow is below Low Flow Validation Range Set Point.
Low UVT Alarm	UVT is below preset low limit set point.
PDC Fan Failure	The PDC fan has a fault, has 2 or more fans failed as indicated by a BCB input.
PDC High Temperature Warning	Warning that the PDC cabinet temperature is increasing.
SCADA Fault	The Plant SCADA network has stopped communication with the PLC for 20 seconds.
SCC Power Restored	SCC power has been restored.
System In Transition	Low dose masked.
System Power On Reset*	System has experienced a power on reset condition.
UPS Fault*	The UPS backup for the SCC has a fault.
UVI Sensor Fault (Non-SBC)	No control action taken.
UVI Sensor Lower Than Expected Warning (Non-SBC)	Inhibits requests from the BCB to initiate a remote wipe of the bank.
UVI Sensor Reference Check Active	A UVI Sensor Reference Check is currently being performed on the bank.

Table 11 Minor Alarms

Alarm Condition	Description
UVI Sensor Reference Check Required	The UVI Sensor Reference Check Required timer has expired; a reference check of the bank UVI sensor(s) is required to maintain system performance.
UVT Below Design Value	UVT is below the design value.
UVT Meter Override Value Used	UVT analog signal below 2 mA or above 20.5 mA.
Wiper Not In Remote	Wiper Group is not set to “Remote” at the HSC.
Wiper Position Unknown (Latched)	The wiper has lost its “Home” position due to a Wiper Group Jammed or Wiper Retract Travel Time Exceeded Fault. After the cause is resolved, reset the Wiper latched alarm (Section 8.1.5).

* Displays for systems with UPS only.

10.3 UV Bank

Table 12 UV Bank

Condition	Possible Cause	Solution
Bank will not lift to the up/service position	HSC is not functioning.	HSC power to be checked by an electrician.
		Correct selector switch on HSC of bank attempting to lift (Section 8.1).
Bank XX Not in Place (Latched)	Bank is not in fully down position.	Lift the UV Bank Down (Section 8.1.2).
	Faulty Bank In Place Sensor.	Replace Bank In Place Sensor (Section 7.7).
	Faulty Discrete Input Card.	I/O signal function to be checked by an electrician.
	Bank in Place sensor requires a reset.	Unplug and replug back in.
	Bank in Place Sensors have moved.	Check sensor adjustment (Section 7.7).
Bank XX Not in Remote Auto	Selector switch or HMI selection is not in remote auto.	Verify PDC mode selector switch is in Remote (Section 8.2.1).
		Verify HMI selection is set to Remote Auto (Section 8.3.4.1).
Bank XX Low Water Level	Channel water level is low and low level electrode/probe is exposed to air.	Ensure the water level in the channel is of the correct level.
	Broken or missing electrode/probe.	Replace broken or missing electrode/probes. Contact your local Service Provider.
	Power loss.	Verify 24 V is present.
	Faulty field wiring.	Contact a certified Electrician to correct wiring.
	Failed water level connections.	Replace low water level sensor enclosure.

Table 12 UV Bank

Condition	Possible Cause	Solution
Bank XX Low Water Level Warning	Channel water level low.	Make sure that the water level in channel is at correct level. Inspect the water level control device is operating correctly.
	Broken low water level rods.	Replace low water level rods. Contact your local Service Provider.
	Power loss.	The SCC contains the low water level controller has lost power. Restore power to the SCC or disable low water level alarm on HMI.
	Faulty field wiring or input card.	Discrete input card signal function to be checked by a controls technician.
		Replace low water level sensor. Contact your local Service Provider.
Bank XX Lift attempted with lamps energized	UV Lamps in UV Bank are energized while a manual lift is initiated.	Return the UV Bank to Wiping Mode.
		Power off UV Lamps in the UV Bank.
Bank XX Multiple Lamp Failure	Number of lamps failed equal or exceeds multiple lamp fail set point.	Replace UV Lamp (Section 9.3.2). Reset Multiple Lamp Failure latched Alarm (Section 8.3.4.5).
	Lamp hours have exceeded 15,000 hours.	
	Faulty Contactor	Contactor to be checked by an Electrician.
	Faulty Lamp Driver Rack	Use lamp driver diagnostics to confirm lamp driver faults
		Lamp Driver to be checked by an Electrician
Bank XX Wiper Group jammed	Wiper seals may: • Require cleaning • Require replacement • Be installed incorrectly	Inspect Wiper Seals. Ensure they are properly installed, free of debris and / or need replacement. Refer to Section 9.7.4.1.
	Wiper scrapers may: • Require cleaning • Require replacement • Be installed incorrectly	Inspect wiper scrapers. Ensure they are properly installed, free of debris and / or need replacement. Refer to Section 9.7.4.1.
	Lamp Sleeves require cleaning	Inspect lamp sleeves for debris or buildup. Clean or replace if required. Refer to Section 9.4.1.
	Faulty Pressure Sensor	Contact your local Service Provider
	Incorrect Pressure Setting	Contact your local Service Provider
	Decoupled hydraulic cylinder	Contact your local Service Provider

Table 12 UV Bank

Condition	Possible Cause	Solution
Bank XX Wiper travel time exceed	Debris or buildup on Bank wiper components and/or sleeves.	Lift UV bank to Service position Section 8.1.2 and remove debris. Also time a wiper sequence in the service position.
	Ambient temperature is too low Section 1.	The hydraulic oil may be operating at a lower then acceptable temperature - slowing the wiping system down.
	Excessive fouling on sleeve.	Fill up cleaning solution (Section 9.7.2).
		Perform manual wipe sequence (Section 8.3.5.1) and manually clean if required (Section 9.4.2).
	Faulty Pressure Sensor	Confirm proper function of pressure sensor. Contact your local Service Provider.
Broken Sleeve	Foreign object in wiper canister.	Remove object. Replace lamp sleeve (Section 9.4.1).
	Foreign or larger objects in channel damaged sleeve.	Inspect upstream and downstream and UV Banks for foreign objects and remove as necessary.
Lamp sleeve hazing (inside)	Water inside sleeve.	Refer to water in sleeve (page 179).
	Off gassing due to foreign substances inside sleeve.	Replace lamp sleeve (Section 9.4.1).
	Oil, silicone lubricant, cleaning solution residue on sleeve or UV lamp.	Clean lamp sleeve and/or UV lamp (Section 9.4.2).
Lamp sleeve hazing (outside)	Mineral/chemical composition of wastewater - Iron, ferric chloride.	Manually clean lamp sleeves (Section 9.4.2).

Table 12 UV Bank

Condition	Possible Cause	Solution
Sleeves are fouled (single hydraulic cylinder and wiper carriage assembly)	HSC not working, due to: 1 - No power (main power and 24V dropout).	Check fuses, power at HSC.
	2- Low level (hydraulic fluid).	Fluid level should be 1/2 full.
	3- Low effluent level.	Make sure the liquid level in the channel is at the correct level.
	4- High effluent level.	Run wipe system when flow returns to normal.
	5- High pressure shutdown.	Section 9.8.2.
	6- Motor run fault.	Check motor overload and full load amps set point.
	7- Comm fault.	Wiring to be checked by an electrician.
	8- HSC not in remote.	Make sure the selector switch is in remote (Section 8.1).
	9- Faulty solenoid.	Contact Electrician.
	10- Wiper group disabled.	Enable wiper group.
	11- Pump failure.	Contact Electrician.
	12- Blown fuse (s).	Contact Electrician.
	13- Disconnect switch OFF.	Turn On.
	Wiper moving but sleeves fouled: 1- Insufficient amount of wipe cycles.	Modify wiper sequence cycle time in wiper settings to provide proper cleaning.
	2- Cleaning solution not topped up or old (increased pH).	Refill cleaning solution.
	3- Worn wiper seals.	Replace wiper seals on bank.
	4- Effluent quality.	Improve quality of upstream effluent.
	Cleaning solution empty.	Fill up cleaning solution.
	Worn wiper seals.	Replace wiper seals.
	Pressure Buildup.	Check wiper collar for cleaning solution blockage.
	Faulty hydraulic cylinder.	Replace hydraulic cylinder. Contact your local Service Provider.
	Pinched or restricted hydraulic hose.	Correct hose assembly. Fix hydraulic hose assembly.
UVI Sensor Reference Check Active	UVI Reference check is being performed.	Complete the UVI Reference Sensor Check.
UVI Sensor Reference Check Required	Time has expired and a reference sensor check is required.	Perform the UVI Reference Sensor Check. Refer to DC0006xx-013.

Table 12 UV Bank

Condition	Possible Cause	Solution
Water in sleeve	Damaged or broken sleeve.	Replace lamp sleeve (Section 9.4.1). Refer to DC0006xx-013.
	O-ring is damaged.	Replace Lamp Plug O-ring.
	Improper lamp connection (not plugged in correctly).	Remove lamp power cord and reconnect lamp cord (Section 9.3.2).
	Corrosion.	Make sure all connections pins are dry and clean. Replace lamp power cord if necessary.
	Water inside sleeve.	Dry with a lint free cloth with isopropyl alcohol to remove all residues.

10.4 Channel

Table 13 Channel

Condition	Possible Cause	Solution
Channel XX inlet gate failed to start opening (Latched)	Loss of power.	Inlet gate power to be measured and verified by an electrician.
	Gate operational in other mode.	Verify inlet gate operation in hand.
	Faulty input signal or input card.	Discrete I/O card signal function to be checked by an electrician.
	Input to PLC.	Verify inlet gate input on PLC.
		Contact gate service personnel.
Channel XX Weir Gate Position Signal Fault	Gate power.	Measure and verify weir gate power.
	Faulty I/O signal or card.	I/O signal function to be checked by an electrician.
	Check other gate operation.	Verify weir gate operation in hand or local.
		Contact weir gate service personnel.
Channel Weir Gate Fault	Loss of gate power.	Contact Electrician.
	Faulty Gate	Verify the gate is in hand mode or local mode or Contact Weir Gate service personnel.
	Actuator Fault	Contact Electrician
	Actuator elevation	Review layout drawings.
	Faulty Discrete I/O Card	Discrete I/O card signal function to be checked by an electrician.
Channel XX Not Enough Healthy Banks Available	Banks not in remote auto.	Put bank(s) into REMOTE AUTO.
	Banks with multiple lamp or lamp driver fault.	Refer to: Bank XX Multiple Lamp Failure on page 176. Multiple Lamp Driver Failures.
	Low water level.	Refer to Bank XX Low Water Level Error on page 175.
	BCB communication fault.	Refer to SCC- PDC Communication fault on page 183.
	Low UV Dose for target dose set point.	Check UVI, Flow, UVT and End of Lamp life.

Table 13 Channel

Condition	Possible Cause	Solution
Channel XX Inlet gate failed to open (Latched)	Loss of power.	Inlet gate power to be checked by an electrician.
	Gate operational in other mode.	Verify inlet gate operation in hand.
	Faulty input signal or input card.	I/O card signal function to be checked by an electrician.
	Input to PLC.	Electrician verify inlet gate input on PLC.
		Contact gate service personnel.
Channel XX inlet gate failed to start closing (Latched)	Loss of power.	Inlet gate power to be measured and verified by an electrician.
	Gate operational in other mode.	Verify inlet gate operation in hand.
	Faulty input signal or input card.	I/O card signal function to be checked by an electrician.
	Input to PLC.	Verify inlet gate input on PLC.
		Contact gate service personnel.
Channel XX Water Level Signal fault	Signal loss.	Verify water level sensor function.
		I/O card signal function to be checked by an electrician.
Channel XX flow limit for wiping exceeded. Wipers will be inhibited for the duration of this alarm	Increase of flow and wiping will be inhibited so as not to affect head loss.	Flow has exceeded the channel hydraulic maximum.
		If flow is below design then verify flow signal.
	Increase of flow.	Verify channel flow has not exceeded 80% of maximum flow.
		If flow is below design then verify flow signal.
Channel XX inlet gate not in remote auto	Incorrect switch position.	Put gate in remote auto.
		Contact gate service personnel.
	Faulty signal or input card.	I/O card signal function to be checked by an electrician.
Channel XX weir gate not in remote auto	Incorrect switch position.	Put gate in remote auto.
		Contact gate personnel for further troubleshooting.
	Faulty signal or input card.	I/O card signal function to be checked by an electrician.
Channel XX High Water Level Alarm	Algae/debris buildup on upstream side of the banks.	Remove algae and debris from bank components.
Channel head loss higher than normal	Higher flow.	Verify flow has not exceeded design limit
	Algae/debris buildup on UV banks.	Remove algae and debris from banks.
Low UVT out of validation range	UVT is below validated range	The UVT reading has gone below the validated range for the current dose calculation mode. ***Note:*** *The UV Banks will operate at the highest power level.*
	Faulty input signal or analog input card.	I/O card signal function to be checked by an electrician.

10.5 System

Table 14 System

Condition	Possible Cause	Solution
Design Flow Exceeded	Increase of flow.	Compare flow meter to SCC HMI flow values.
		Measure 4-20 mA.
Flow Meter fault	Possible loss to PLC Input card.	I/O card signal function to be checked by an electrician.
	4-20 mA wiring open circuit.	Check for bad or loose connections.
	Faulty loop isolator.	Verify the analog flow loop isolator.
	Flow meter failure.	Replace or fix flow meter.
	Faulty analog input on PLC input card.	I/O card signal function to be checked by an electrician.
Flow Meter Override Value	Flow meter is bypassed.	The flow meter is bypassed and the system is operating off the entered flow value.
High Flow Out of Validation Range	Flow has gone above the validation range.	Verify channel flow. I/O card signal function to be checked by an electrician.
High UVT out of validation range*	UVT is above validated range.	The UVT reading has gone above the validated range for the current dose calculation mode. ***Note:*** *The UV Banks will operate at the lowest power level.*
	Faulty input signal or analog input card.	I/O card signal function to be checked by an electrician.
Low Flow Alarm	Flow is below recommended operating parameters.	Verify if there is a flow event. Correct flow event.
		I/O card signal function to be checked by an electrician.
		Compare flow meter to SCC HMI flow values.
	Water level management.	Verify flow meter operation.
		Verify upstream and downstream water level controller devices.
Low Flow Out of Validation Range	Flow has dropped below the validated range.	Verify channel flow. I/O card signal function to be checked by an electrician.

Table 14 System

Condition	Possible Cause	Solution
Low UV Dose	UVT value too low (can be either an entered or an online value).	Check wastewater UVT value. Enter correct value (if manually entered) or verify value matches online UVT meter.
		If the UVT value is correct then upstream wastewater processes are causing the UVT values to be below allowable limits. Review processes that could be causing lower UVT levels. Contact your local Service Provider for assistance.
	Bank(s) in “Remote Off” or “Local Off”.	Put bank(s) into “Remote Auto” (Section 8.3.4.1).
	High flow.	Check the online or entered flow. If flow value is correct, then the current influent flow conditions are above allowable limits.
	End of lamp life exceeds 15,000 hours.	Replace UV Lamp (Section 9.3.2).
	Not enough healthy banks.	Refer to Not enough healthy banks on page 173.
Low UVT	UVT is below design set point.	Compare UVT reading on SCC HMI and compare to Online UVT Monitor.
	Water quality has dropped below design.	Verify UVT monitor with a UV photometer or spectrophotometer.
		Resolve upstream process of UVT as required. Contact your local Service Provider for list of items that may inhibit UVT.
Not Enough Healthy Channels (Latched)	Not enough healthy channels of UV equipment available to ensure proper system performance	The controller will try to open all available channel (s) (if slide gates are controlled and turn on all banks) all non-faulted banks, and UV banks with multiple lamps, multiple lamp driver or module communication faults will operate at full power. This alarm can only be cleared after the cause of the alarm has been corrected. This is also a latched alarm so it will have to be cleared by pressing the Not Enough Healthy Channels (NEHC) button on the HMI.
PLC Fault	PLC has faulted.	Verify PLC key switch, fault lights and run mode status.
		Contact PLC or Controls Technician.
PLC Low Battery	Verify battery light on PLC.	PLC battery requires replacement.
		Refer to the PLC manual for battery replacement procedure.
SCADA Fault	Faulty wiring.	Check for faulty or loose connections.
	Power loss to SCC.	Check the input power to the SCC.
	SCADA system faulty.	Contact plant SCADA integrator for support.
SCC- HSC XX Communication Fault	Loss of communication between the HSC and SCC.	Confirm and tighten terminal connections of the communication wiring within the SCC and HSC.

Table 14 System

Condition	Possible Cause	Solution
SCC- PDC Communication fault	Loss of communication between the SCC and PDC.	Confirm and tighten terminal connections for the communication wiring between the SCC and PDC.
		Measure the incoming BCB voltage.
System Power on Reset	System experienced a power outage.	UV System is recovering from a power failure, wait for the alarm delay time to expire.
SCC Power restored	Power has been restored to the SCC.	Verify slave on address on the HSC.
		System can be restored to normal operation.
SCC Run on UPS	SCC has lost power and allows Operator to properly shutdown the UV System.	Check main utility power to UV system.
Trend screen is blank	Power to the SCC has been cycled.	After power has been restored allow a few hours and then verify trending values.
	Range settings is incorrect for value.	Configure correct range settings for value (if applicable).
	No compact flash card inserted (if applicable).	Insert Compact Flash card into HMI display (if applicable).
UVT Below Design Value	Water quality or UVT values are lower then design.	Compare UVT reading on SCC HMI and compare to Online UVT Monitor.
		Verify UVT monitor with a UV photometer or spectrophotometer.
	Faulty signal or analog input card.	I/O card signal function to be checked by an electrician.
UVT Below Design Value*	UVT below validated range.	The UVT reading has dropped below the validated range for the current dose calculation mode. ***Note:*** *The UV Banks will operate at the highest power level.*
	Faulty input signal or analog input card.	I/O card signal function to be checked by an electrician.
UPS Fault	UPS status.	Check UPS for fault light.
	Input and output power on the UPS.	Verify input on output power to the UPS.
	Faulty UPS battery.	Replace UPS battery as required.
UVT meter fault	The analog input signal for the flowmeter has dropped below 2 mA or greater then 20.5 mA.	Measure analog signal.
	Power loss to analog input card.	Make sure there is power to the PLC and UVT meter.
	4-20 mA wiring open circuit.	Check for loose or bad connections.
	Loop isolator (PDC).	Replace analog UVT loop isolator (PDC).
	Faulty analog input in PLC rack.	I/O card signal function to be checked by an electrician.
	Online UVT failure.	Replace or repair UVT monitor.
UVT Meter - Override Value Used	UVT meter is no longer online.	Restore UVT Monitor to Online mode at the HMI.

10.6 Hydraulic System Center

Table 15 HSC

Condition	Possible cause	Solution
Erratic wiper movement	Blockage of wiper assembly.	Remove blockage from wiper assembly.
	Excessive algae.	Remove algae or debris build up within the wiper canisters.
	Worn seals.	Replace wiper seals.
	Air in the hydraulic lines.	Check fittings to make sure that air is not being introduced through loose connection points. Perform manual wipes until old air is bled through the lines.
Filling ActiClean Gel - ActiClean Gel is not discharging from the overflow port	Tubes are clogged or damaged.	Unplug all tubes or replace as necessary.
	Tube clamps are not tight or missing.	Tighten or replace clamps as necessary.
	Faulty Pump Assembly.	Clean and unclog.
		Replace Pump Assembly.
Filling ActiClean Gel causes a leak (spilling)	Canister ends are loose.	Tighten canister end caps.
	Wiper seal installed backwards.	Install Wiper Seal correctly (Section 9.7.4.1).
	Wiper seal is missing.	Install wiper seal (Section 9.7.4.1).
	Spring seal is missing on wiper.	Replace wiper seal (Section 9.7.4.1).
	Debris between seal and sleeve.	Clean lamp sleeve (Section 9.7.4).
	Damaged canister (e.g. Cracked).	Replace wiper canister (Section 9.7.4).
	Tubing is clogged or damaged.	Unplug all tubes and replace as necessary.
	Too much injection pressure due to improper filling technique.	Follow Fill Wiping System Procedure (Section 9.7.2).
HSC XX Hydraulic tank low level	Low fluid level.	Fluid level should be 1/2 full.
	Fluid leakage.	Tighten if loose.
	Air in the system.	Check over fittings to make sure that air not being induced, through loose connection points.
	Faulty pressure sensor.	Replace low pressure sensor.
HSC XX Pump Fault	No power to the Pump.	3-Phase power to the contactor to be checked by an electrician.
	Contactor is disengaged.	Contactor to be checked by an electrician.
	HSC input.	Verify the HSC Controller discrete input light is illuminated.

Table 15 HSC

Condition	Possible cause	Solution
Hydraulic fluid leak	Oil filter is not seated correctly.	Tighten if loose.
	Loose hydraulic fittings.	Tighten if loose.
	Hose leaks.	Tighten if loose, replace hydraulic hoses if required.
Remote Wipe Inhibited	Increase of flow.	Compare flow meter to SCC HMI flow values.
		Measure 4-20 mA.
	Faulty I/O Card	Contact your local Service Provider.
SCC- HSC XX Communication Fault	Faulty or loose communication wiring between the SCC and HSC.	Confirm and tighten terminal connections of the communication wiring within the SCC and the HSC.
Top lamp sleeves are fouled - rest of lamps are properly cleaned	Water level management.	Verify level controller unit is operational and not leaking, repair as required.
Unable to initiate wiper sequence	Low hydraulic fluid.	Verify fluid levels are minimum 1/2 full.
	Motor overload tripped.	Check motor overload and full load amps set point.
	Disconnect switch OFF.	Set the switch to ON.
	No 24 VDC.	Fuse and input power to be checked by an electrician.
	Fuse Blown.	Fuse to be replaced by an electrician.
	Bad or loose connection.	Tighten connections, replace wiring as necessary.
	Faulty selector switch.	Contact your local Service Provider.
	Faulty HSC Controller.	Replace HSC Controller. Contact your local Service Provider.
	Pump failure.	Replace HSC pump. Contact your local Service Provider.
Wiper not in Remote	HSC selector switch is set to “Local” or “Off” mode.	Set UV Bank Wiper Mode Switch to “Remote” (Section 8.1.3.1).
Wiper position unknown	Wiper has not returned home.	Operate HSC in Local mode to verify if the wiper returns home.

10.7 Power Distribution Center

Table 16 PDC

Condition	Possible Cause	Solution
Bank XX PDC High Temperature Shutdown (Latched)	PDC has reached high temperature.	Verify ambient temperature does not exceed 55°C (130°F).
	Clogged Filter.	Clean the air filter (Section 9.10.1).
	Failed fans within the lamp driver fan rack.	**1** Confirm that two (2) fans are not functional. If 2 fans have failed. Proceed to step 3. **2** If one (1) fan is faulty, confirm current sensing transformer calibration. Refer to the PDC electrical drawings. **3** Faulty fans to be replaced by an electrician.
	Air Conditioning unit has failed.	Measure the incoming voltage to the air conditioning unit.
		Contact air conditioner manufacturer for service and / or parts.
Bank XX PDC High Temperature Warning	PDC temperature increasing.	Clean the A/C unit air filter (Section 9.10.2).
		Ensure there is not a cooling fan failure.
		A/C unit requires maintenance, contact local A/C certified Technician
		Faulty A/C unit
PDC Fan failure	2 or more fans have failed with the lamp driver cooling fan rack.	**1** Confirm that two (2) fans are not functional. If 2 fans have failed. Proceed to step 3. **2** Confirm current sensing transformer calibration. Refer to the PDC electrical drawings. **3** Faulty fans to be replaced by an electrician.
UV Bank Lamp XX Lamp Driver Communication Failure	Faulty lamp driver.	Check Lamp Driver Diagnostics on the HMI.
		Replace the faulty lamp driver (Section 9.10.1).
	Communication loss between the Lamp Driver and the BCB.	Verify bad or loose communication wiring.
	Lamp Driver is not properly seated in the rack.	Electrician to properly seat the Lamp Driver in the rack.
	Incorrect lamp driver address.	Change driver address and change to a correct driver location in the driver rack. (Section 9.10.1).

Contact your local Service Provider with the listed information to order replacement parts.

Provide the:

- Product name and model number (refer to the front of this manual)
- Part number and description of the replacement part or accessory

If a replacement part is not listed, contact your Local Service Provider.

11.1 UV Lamp and Lamp Sleeve

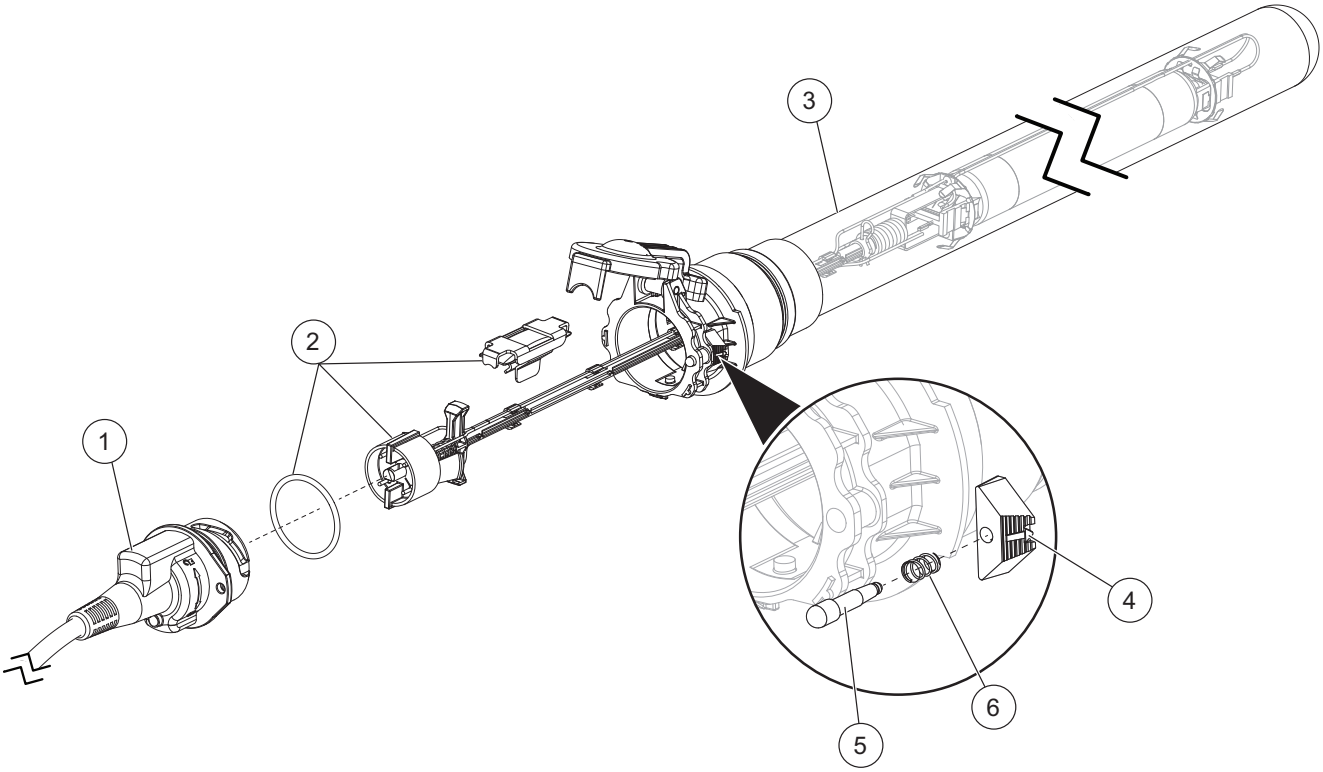

Figure 64 UV Lamp and Lamp Sleeve

Item	Description	Part Number
1	Cable Assembly	
	10 meter length	908108-210R
	15 meter length	908108-215R
	20 meter length	908108-220R
	25 meter length	908108-225R
	30 meter length	908108-230R
	Lamp Kit (includes UV Lamp, Lamp Plug O-ring and Desiccant Kit)	338299-101*
2	Kit, Lamp Desiccant	908118
	Plug, O-Ring	002293-226
3	Lamp Sleeve Assembly	338229-2672
4	Handle, Locking	908072
5	Locking Pin	908073
6	Spring, Compression	013258

* *This component contains MERCURY. Dispose according to Local, State, or Federal Laws.*

11.1.1 Lamp Sleeve Ports Top

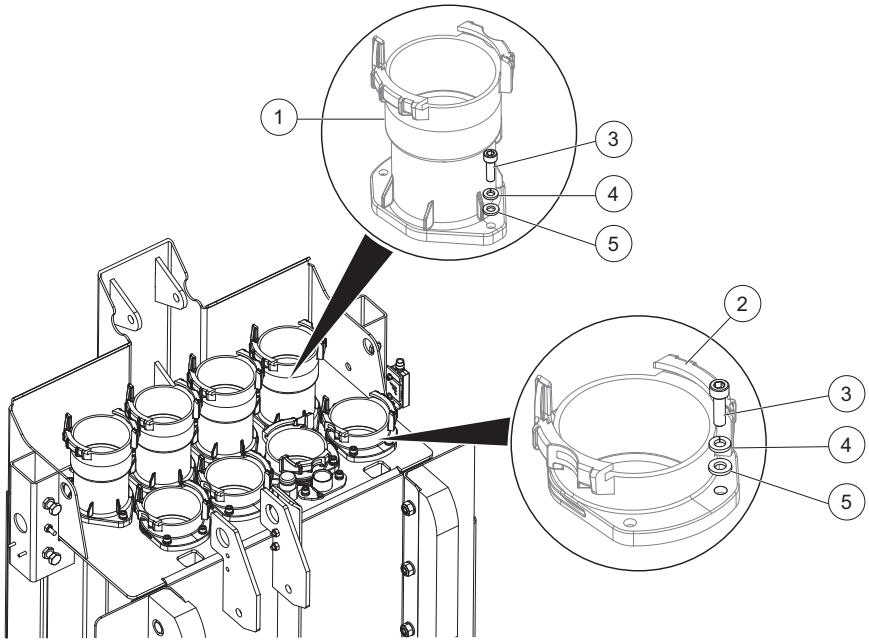

Figure 65 Lamp Sleeve Ports Top

Item	Description	Part Number
1	Top Port, Tall	337722-002
2	Top Port, Short	337722-001
3	Screw, SHCAP M6 x 20 316 SST	010368-MNCC03160
4	Washer, Lock Reg 6mm 316 SST	012075-AA0060316
5	Washer, Plain 6mm 316 SST	012073-R060316

11.2 UV Bank

Item	Description	Part Number
1	Sleeve Bushing 55mm (Floor)	337850
2	UVI Sensor Floor Bushing	7925942
3	Lock Plate	337894

11.3 UVI Sensor and Sleeve

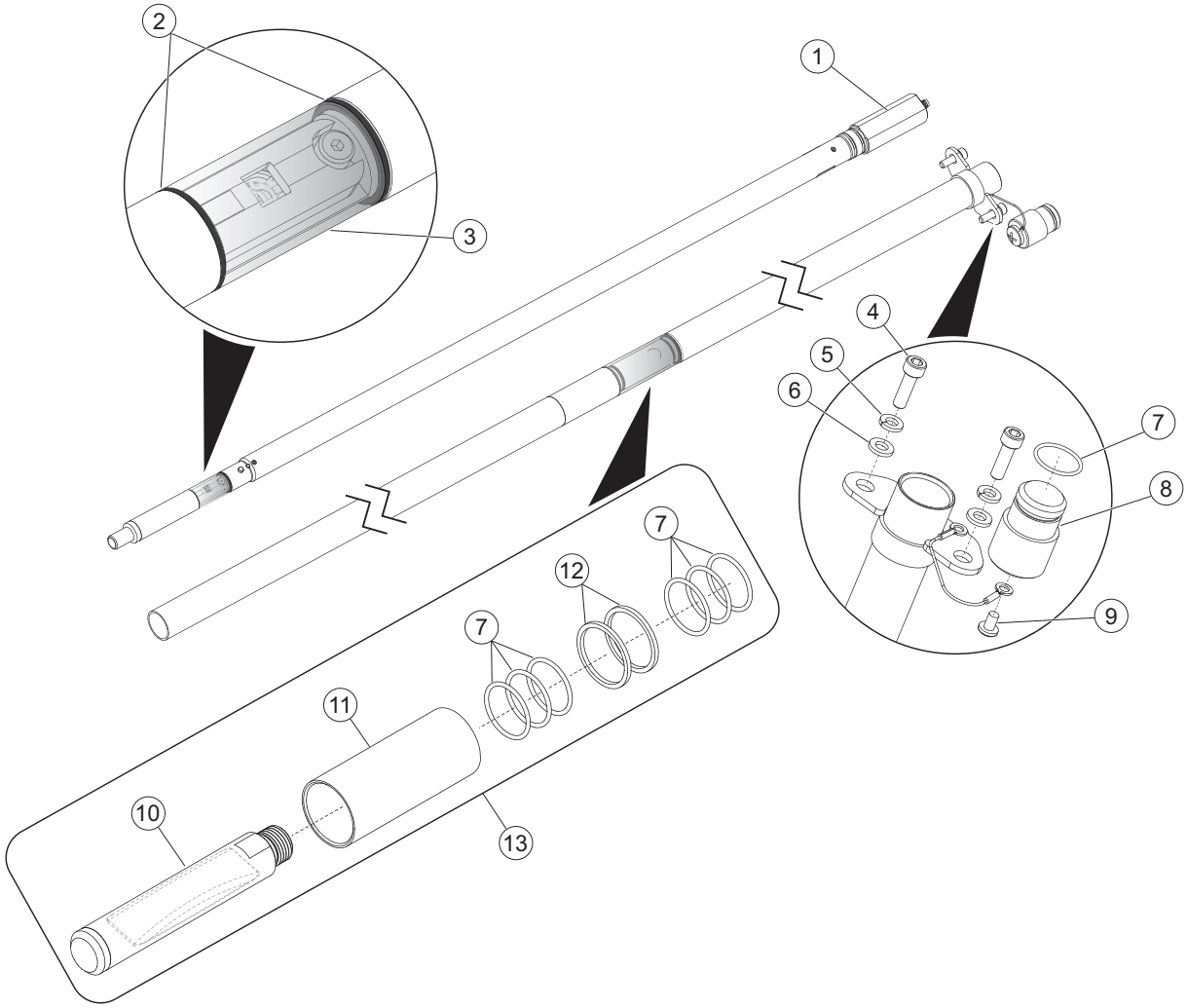

Figure 66 UVI Sensor and Housing

Item	Description	Part Number
1	UVI Sensor Assembly, Duty (15-40% UVT)	015525-SR2-S-154
	UVI Sensor Assembly, Duty (30-82% UVT)	015525-SR2-S-382
	UVI Sensor Assembly, Reference (15-40% UVT)	015525-SR2-R-154
	UVI Sensor Assembly, Reference (30-82% UVT)	015525-SR2-R-382
2	X-ring, .614”ID x .103” V70	002270-016V70
3	Sleeve, Signa 2R Sensor	015522
4	Screw, SHCAP M6 x 20	010368-MNCC03160
5	Washer, Lock 6mm	012075-AA0060316
6	Washer, Plain 6mm	012073-R060316
7	O-ring 13/16 x 1/16 Silicone	002296-019
8	Plug, Sensor Port	015529
9	Screw, 10-24 x 3/8 Pan	010085
10	Desi Pack Assembly, Signa 2R Sensor	338323
11	UVI Sensor Housing Sleeve	908115
12	O-ring, 15/16 X 1/16 SQ Silicone	002297
13	Replacement Kit, Signa 2R Sensor	338325

11.4 UVI Sensor Wiper

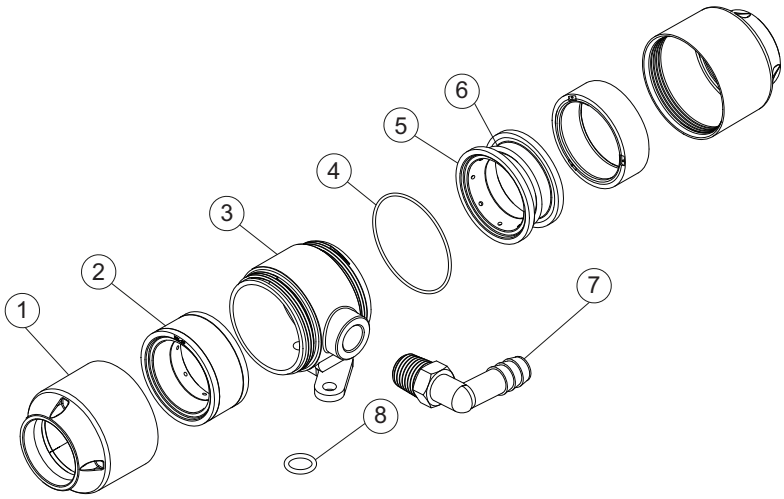

Figure 67 UVI Sensor Wiper

Item	Description	Part Number
1	Cap, Wiper	327116-STD
2	Spacer, Wiper Seal	327017
3	Canister Body, Sensor 28mm	337987
4	O-ring, Wiper Canister	327118
5	Seal, Wiper	327021
6	Spring, Seal	327029
7	Fitting, Wiper	013403
8	O-Ring, 3/8 x 1/2	002211-012

11.5 Wiper Canister Assembly

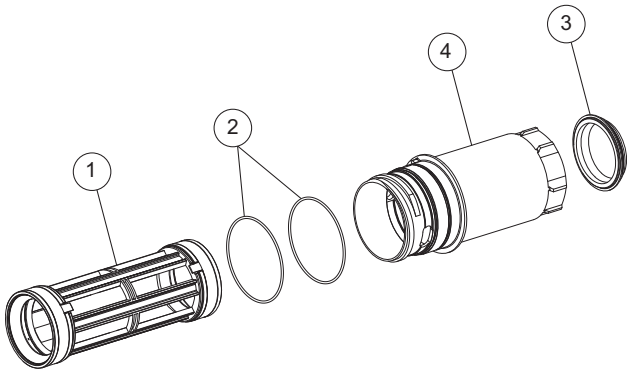

Figure 68 Standard Position

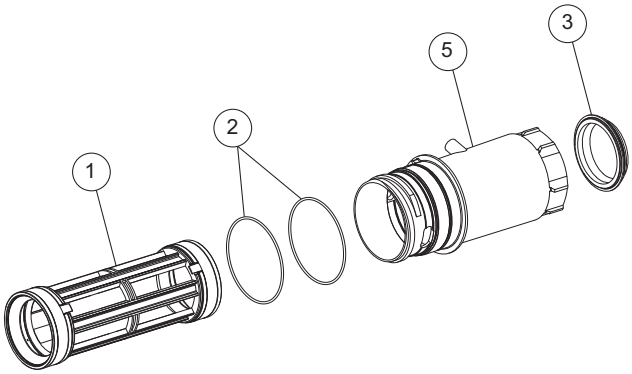

Figure 69 UVI Sensor Position

Item	Description	Part Number
--	Wiper Replacement Kit includes (items 1, 2 and 3)	338044
1	Scroll Cage Assembly (includes wiper seals)	--
2	O-ring, 75 x 2.25mm (x2)	002278-75A2C
3	Sleeve Bushing 55mm (Wiper)	337850
4	Wiper Canister Body, Standard Position	337990-001
5	Wiper Canister Body, UVI Sensor Position	337990-002

11.6 Hydraulic System Center

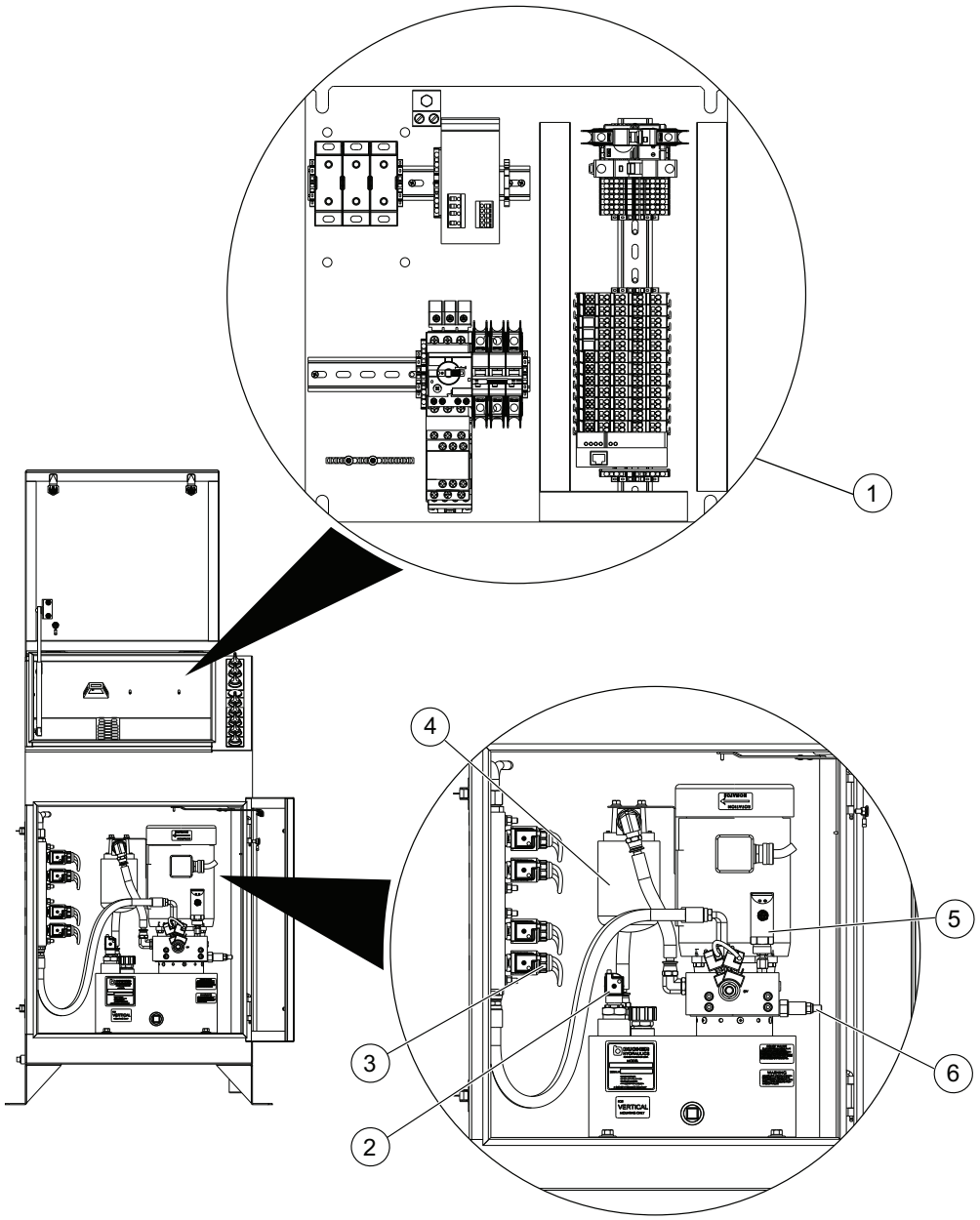

Figure 70 HSC

Item	Description	Part Number
1	Refer to Electrical Drawings Bill of Materials for HSC backplate replacement parts.	
2	Float Switch	907393
3	Solenoid Valve	907933
4	Hydraulic filter	907384
5	Pressure Sensor	917516-580C
6	Pressure Relief Valve	907935
--	Hydraulic Fluid, Mineral Oil 20L**	446022-020
--	Hydraulic Fluid, Pure Drive 20L**	907666-020P
--	VCI Emitter	913187

** Refer to the reservoir label or system description for hydraulic fluid used in the system.

11.7 Hydraulic Cylinder

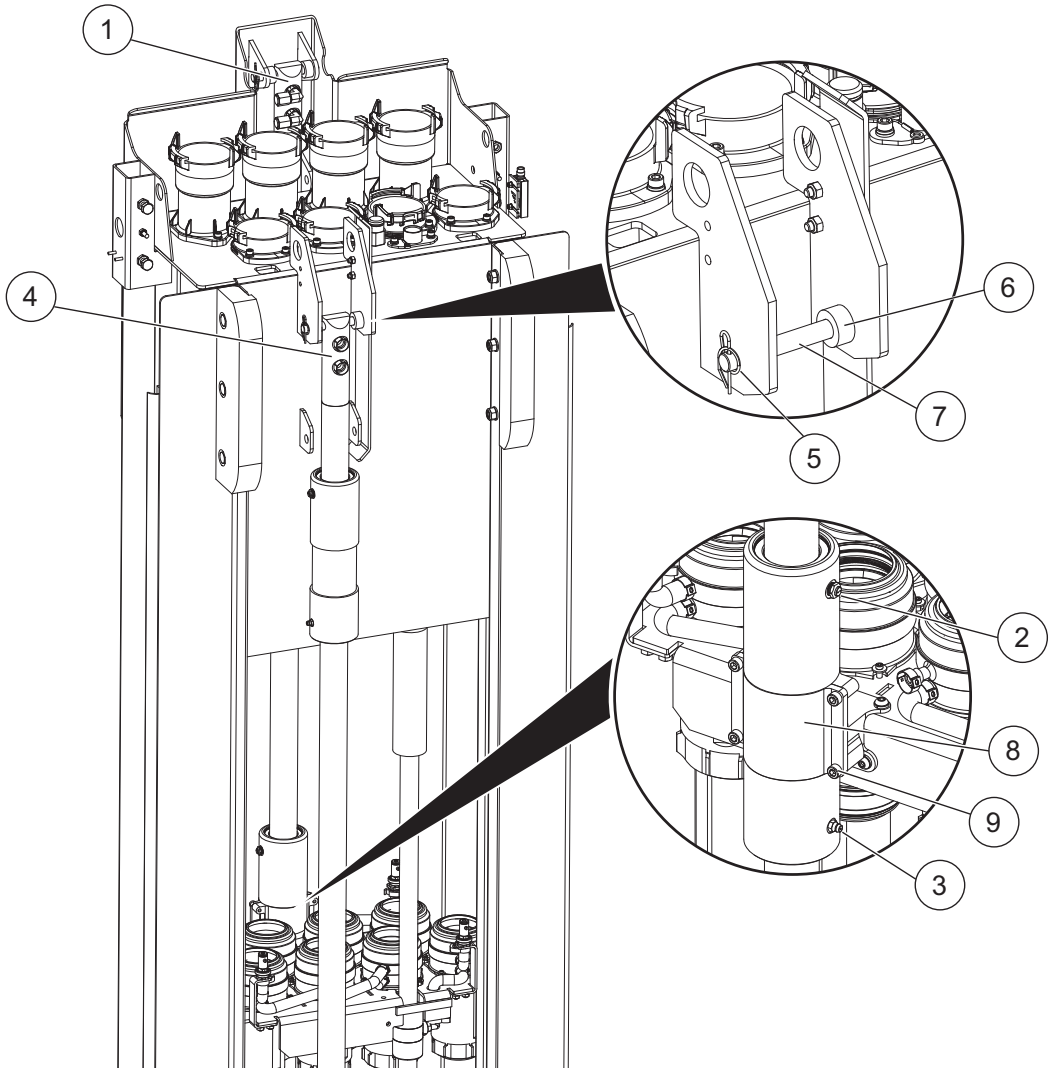

Figure 71 Hydraulic Cylinder

Item	Description	Part Number
1	Wiper Hydraulic Cylinder	338021-001
2	Pressure Relief Vent - Wiper Cylinder	013405
3	Grease Nipple - Wiper Cylinder	326399
4	Lift Hydraulic Cylinder	338021-002
5	Pin, Rue Ring Cotter 5/8-in	013164
6	Spacer, LDPE 1/2-in I.D x 1-in O.D, 1/2-in Long	337706
7	Pin, Clevis 1/2-in diameter, 4-in long 316 SST	337739
8	Cylinder Bracket - Wiper Plate Mounting	337778
9	Screw, SHCAP M6 x 20 316 SST	010368-MNCC03160

11.8 Power Distribution Center

Refer to Electrical Drawings Bill of Materials for additional PDC replacement parts.

Item	Description	Part Number
1	Lamp driver kit	916841
2	Air Conditioner Filter*:	
	8000 / 12000 BTU	917489-001
	20000 BTU	917489-002
3	Roof Fan, Exhaust Filter** - Quantity (x12)	916578-3174100
4	Intake Fan, Filter**	
	Quantity (x5)	916578-3173100
	Quantity (x50)	916578-3173105

* Available for PDC's equipped with an Air Conditioner.
** Available for PDC's not equipped with an Air Conditioner.

11.9 System Control Center

Refer to Electrical Drawings Bill of Materials for SCC replacement parts.

11.10 Miscellaneous

Item	Description	Part Number
--	Grease, food grade	005066
--	Grease Gun	005067
--	Operator Kit	906049-41x2
--	Face Shield	906002
--	Solo Lamp Plug Tool	338174
--	Tool, Canister Body 55mm	337992
--	ActiClean Gel	
	• 4 Liter	901929
	• 4 x 4 Liter	901507
	• 20L Pail	900346
--	Hydraulic Hose	
	• 20 foot length	907875-06B240
	• 30 foot length	907875-06B360
	• 40 foot length	907875-06B480
	• 50 foot length	907875-06B600
--	Fitting, Hydraulic Hose	446025-0606SST
--	Photometer Kit	905107
	• Photometer, UV 100/240 VAC	905253
	• Quartz Cuvette 10 mm	905262
	• Solution, 100%T 1 Gal	905036
	• Solution, Cuvette Cleaner	P19311
	• UV Lamp, 254nm, Realtech	905260

Item	Description	Part Number
--	ActiClean Pump Drill Kit - **North American Projects Only**	
	• 120V Drill	907909-D120V-2R
	• Pumphead with Bracket (ActiClean 20L Pail - not included)	907909-BPERI-2R
	• Pumphead with Bracket (ActiClean 20L Pail - included)	907909-B20L-2R
--	Filler Assembly, Hand Pump - **Non North American Projects only**	337486
--	Safety Sensor, Interlock (Bank in Place)	917457-001
--	UVI Sensor Sleeve 2cm Gauge	337574

Note: *ActiClean Gel is to be stored in a tightly sealed container at room temperature. It cannot be stored at temperatures below 0°C (32°F) or above 50°C (122°F). ActiClean Gel that has frozen will separate into a liquid and sediment once it thaws and must not be used.*

Water Level Control Device - Weir

Installation, Operation and Maintenance Manual

Original Instructions

Edition 1

© Trojan Technologies, 2021. All rights reserved. Printed in Canada.

DC450101-01-05

If you require technical assistance, please contact your local representative. If you require additional assistance, please contact the Technical Assistance Center (TAC) using the contact information below:

North America:	1-866-388-0488
All other areas:	1-519-457-2318
E-mail:	tac@trojantechnologies.com

At the time of publishing, the information within this document is current. Due to continuous improvements, we may have future changes and recommendations which will be sent via product bulletins.

Table of Contents

Section 1 Safety Information 5
1.1 Safety Information 5
1.2 Use of Hazard Information 5
1.3 Precautionary Labels 5
1.4 Safety Precautions 6
Section 2 Shipment and Storage 7
2.1 Shipping the Equipment 7
2.2 Storage Requirements before the Installation 7
2.3 Overview of Equipment Connections 7
2.4 Startup and System Commission 7
Section 3 Installation 9
3.1 Tools and Materials 9
3.2 Weir 10
3.3 Fixed Rectangular Weir 15
Section 4 Maintenance 19
4.1 Preventive Maintenance Schedules 19
4.2 Inspect and Clean the Level Controller 19

1.1 Safety Information

Please read this entire manual before unpacking, setting up or operating this equipment. Pay attention to all danger, warning and caution statements. Failure to do so could result in serious injury to the operator or damage to the equipment.

Make sure that the protection provided by this equipment is not impaired, do not use or install this equipment in any manner other than that specified in this manual.

1.2 Use of Hazard Information

⚠ DANGER

Indicates a potentially or imminently hazardous situation which, if not avoided, will result in death or serious injury.

⚠ WARNING

Indicates a potentially or imminently hazardous situation which, if not avoided, could result in death or serious injury.

⚠ CAUTION

Indicates a potentially hazardous situation which, if not avoided, could result in minor or moderate injury.

NOTICE

Indicates a situation that is not related to personal injury.

1.3 Precautionary Labels

Read all labels and tags attached to the equipment. Personal injury or damage to the equipment could occur if not observed.

	This is the safety alert symbol. Obey all safety messages that follow this symbol to avoid potential injury. When on the equipment, refer to the Instruction/Operational and Maintenance manual for additional safety information.
	This symbol indicates a trained and competent lift operator should be used to move the equipment.
	This symbol indicates a body crush hazard. People should stay clear from under overhead loads.
	This symbol indicates surfaces may be slippery or there is a potential for surface to collapse or to fall below the walking surface.
	This symbol indicates the equipment should be secured with a safety device / hook.
	This symbol indicates a safety glasses with side protection is required for protection against UV exposure.
	This symbol indicates gloves must be worn.
	This symbol indicates safety boots must be worn.

	This symbol indicates a hard hat must be worn.
	This symbol indicates the operator must read all available documentation to perform required procedures.

1.4 Safety Precautions

Read the safety precautions in this section before doing maintenance, service or repair. Obey the instructions in the safety precautions. Failure to follow the instructions in the safety precautions can result in serious injury or death.

⚠ WARNING

Body Crush Hazard.

- Failure to follow these instructions could result in serious injury or death due to improper lifting procedures, underrated lifting equipment and, moving parts.
- ALWAYS secure with safety device.
- ALWAYS stay clear of elevated loads.
- ALWAYS comply with local safety regulations.

⚠ CAUTION

Slip and Fall Hazard.

- Failure to follow these instructions may result in injuries from slip and fall.
- ALWAYS ensure safe footing.
- ALWAYS clean up spills promptly.
- ALWAYS comply with site-specific safety protocols and procedures.

NOTICE

Personal Protective Equipment Required.

- ALWAYS use appropriate eye, hand, and foot protection.
- ALWAYS wear UV-C safety glasses when around equipment or a UV-C faceshield with safety glasses or safety goggles when inspecting open running equipment.
- ALWAYS follow plant safety procedures and protocols.
- ALWAYS take necessary precautions when working around, operating, or working on this equipment, if contamination of components is expected within this application due to effluent biological or chemical contaminants.

NOTICE

Only competent personnel should undertake operation, repairs, maintenance, or servicing of equipment described in this manual. Maintain the continuity of the lockout tag out between shifts. If you do not understand the information or procedure explanations in this manual, STOP and contact your Service Provider for assistance.

Note: *Dispose of contaminated parts/components as per country requirements.*

Section 2 Shipment and Storage

DANGER

Obey all warning and caution statements. Refer to Section 1.

Read and understand the Operation and Maintenance Manual before operating this equipment. Read all user documentation before performing operations, inspections, repair, or maintenance on this equipment.

Only competent personnel should undertake operation, repairs, maintenance, or servicing of equipment described in this section of the manual. If you do not understand the information or procedure explanations in this manual, STOP and contact your Service Provider for assistance.

2.1 Shipping the Equipment

The system is delivered to the site by truck. System components are packed in wooden crates labeled with the component name. Other labels identify components which are fragile or breakable and components which must be kept dry.

2.2 Storage Requirements before the Installation

The manufacturer recommends indoor storage of the equipment. The equipment should be stored in a dry warehouse. Heating is not necessary during storage. However, before system start up, the equipment must be warmed to greater than 15 ºC (60 ºF) for a period of 24 hours.

Storage area conditions:

- Ambient air temperature between -40 ºC to 55 ºC (-40 ºF to 130 ºF).
- Relative humidity from 10% to 90%, non-condensing.
- Free from dust and dirt ingress.
- Must not contain corrosive or explosive gases.
- Free from salt air.
- Vermin free.

If indoor storage is not possible, the water level controllers may be stored outdoors with additional conditions:

- Equipment is stored on high ground that is not susceptible to flooding.
- Equipment is elevated a minimum of 300 mm (12 inches) above the ground or as appropriate to prevent flooding.
- Equipment is completely covered with waterproof tarps to prevent exposure to the elements (e.g., rain, snow, sand, dust etc.). Tarps must be tight fitting, attached securely and examined regularly. Water and snow accumulation should be removed regularly.
- Equipment stored in crates should not be exposed to direct sunlight.
- Equipment can be stored in sea containers.

2.3 Overview of Equipment Connections

Refer to the general layout drawings provided by the manufacturer. If the supplied layout drawings do not match the site conditions, contact the Trojan Technologies for assistance.

2.4 Startup and System Commission

After the shipment of the UV system, the contractor will be issued documentation for a start-up request. These documents must be completed and returned to the issuer before a commission date can be scheduled.

⚠ DANGER

Obey all warning and caution statements. Refer to Section 1.

Read and understand this Operation and Maintenance Manual before operating this equipment. Read all user documentation before performing operations, inspections, repair, or maintenance on this equipment.

Only competent personnel should undertake operation, repairs, maintenance, or servicing of equipment described in this section of the manual. If you do not understand the information or procedure explanations in this manual, STOP and contact your Service Provider for assistance.

No special tools are required for installation, other than those used in the day-to-day operation of a mechanical and electrical contracting firm. An appropriately sized crane may be required for off loading and installation of the unit. Size is dependent upon each project configuration.

3.1 Tools and Materials

Symbols	Description	Symbols	Description
	Lifting Straps (properly rated for equipment loads)		Drill with drill bits
	Measuring Tape		Anchor bolt hardware (by others)
	Grout		Outdoor sealant
	Level		

3.2 Weir

A fixed weir may be supplied in the following configurations:

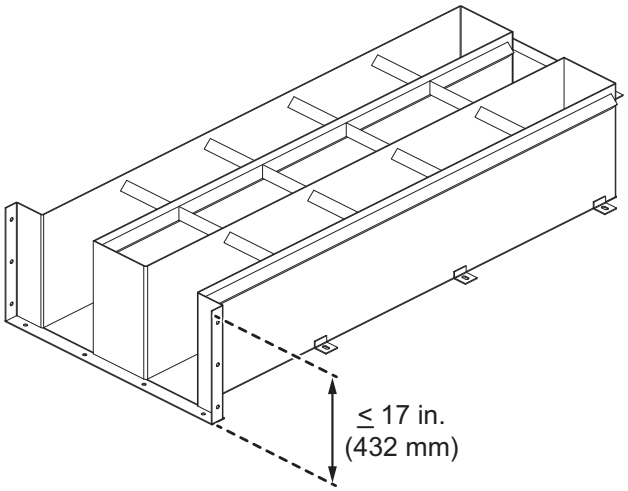

Figure 1 Rectangular Weir (≤ 17 in. high)

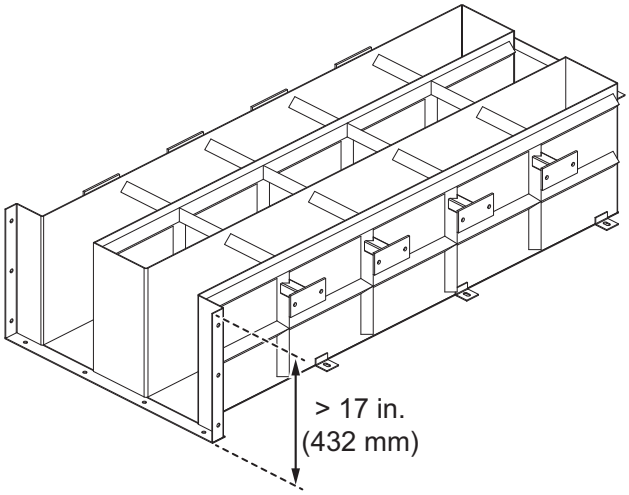

Figure 3 Rectangular Weir (> 17 in. high)

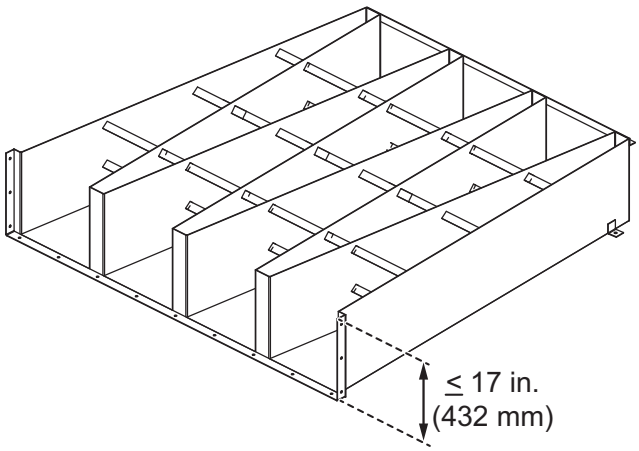

Figure 2 Trapezoidal Weir (≤ 17 in. high)

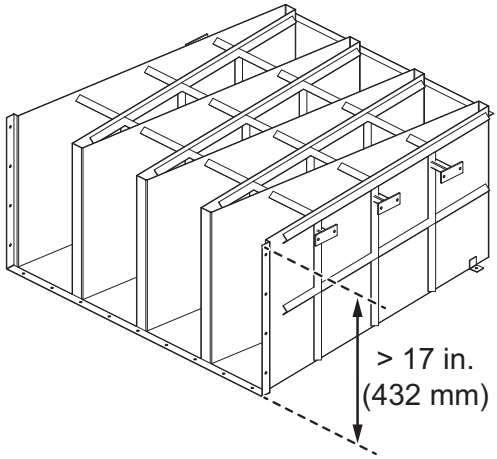

Figure 4 Trapezoidal Weir (> 17 in. high)

Note: *Weirs that are greater than 17 in. (432mm) high will include side supports.*

Note: *Weirs shown are shown for reference only. Site specific weir arrangements may vary by project.*

Prerequisites:

- Make sure the channel is free of water upstream and downstream.
- **Make sure that the elevations of the weir to the bottom of the channel floor, top of the channel and the weir riser conform to tolerances indicated in the layout drawing.**

  Note: *Refer to project layout drawing for dimensions. Adhering to the provided dimensions is critical for the proper functioning of the weir.*

- After the weir is installed and is leveled, ensure that the elevation to the top of the weir conforms to the elevation shown on the layout drawing.

Tools:

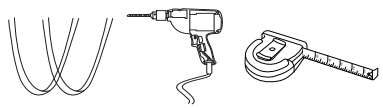

Materials:

- Stainless steel spacers

Procedure:

1. Put the weir in place for final installation, center the weir in the UV Channel.

   Note: *The weir is designed to be 6 - 10mm (1/4 - 3/8 in.) narrower than the channel width at the designated weir installation location.*

NOTICE

DO NOT stretch or compress the weir to fit in the channel. If gap between the channel and weir vertical flanges is less than 6mm (1/4 inch) on either side, fill gap with 316 stainless steel spacers. If the gap is wider, fill with grout. If the weir is wider than the channel, increase the width of the channel.

2. Mark the holes in the weir mounting brackets.

   Note: *The number of mounting holes is based on the total length of the weir.*

3. Remove the weir and drill holes for anchor bolts.

   Note: *Bolt lengths are specified by local building code.*

4. Place 2 beads of marine grade sealant along the length of the bottom mounting flange on the channel floor.

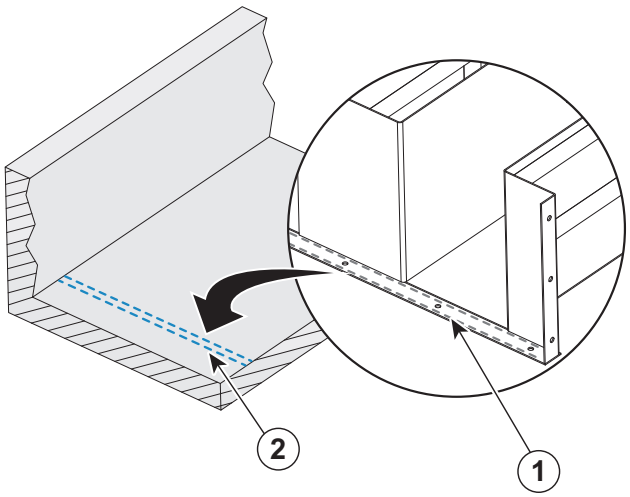

Figure 5 Rectangular Serpentine Weir

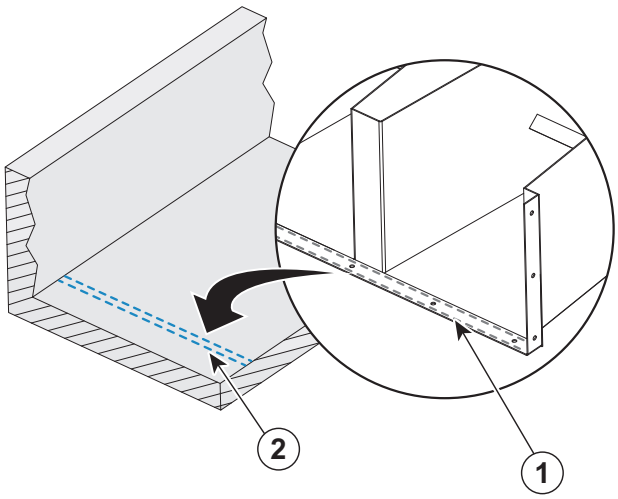

Figure 6 Trapezoidal Weir

1	Mounting Flange	**2**	Sealant applied on channel floor

5. Put the weir back into position for installation and attach it to the floor.
6. If the channel width is:

   a. Sized such that the gap between the channel wall and weir vertical flanges is less than 6mm (1/4 inch), install shims to fill the gap (Item #1, Figure 7, Figure 8, Figure 9 and Figure 10).

   b. Sized such that the gap between the channel wall and weir vertical flanges is greater than 6mm (1/4 inch), install grout in the space between the vertical mounting flanges and the wall (Item #1, Figure 7, Figure 8, Figure 9 and Figure 10).

7. Install grout between wall and support flanges. Refer to Item #2 in Figure 8 and Figure 10.

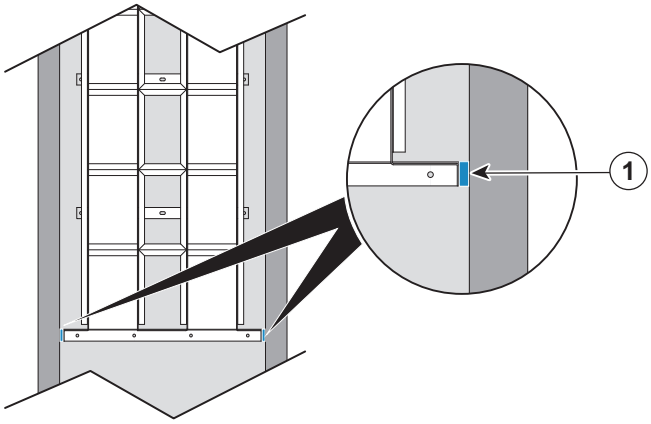

Figure 7 Rectangular Weir (≤ 17 in. high)

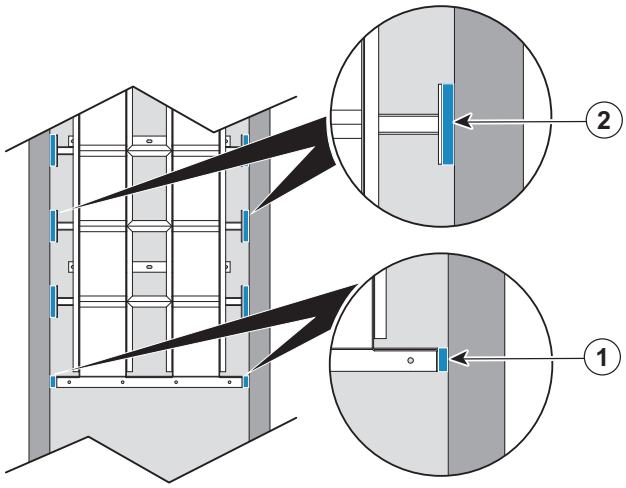

Figure 8 Rectangular Weir (> 17 in. high)

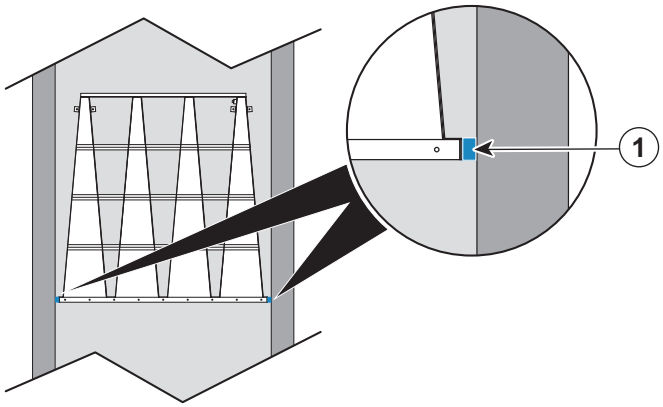

Figure 9 Trapezoidal Weir (≤ 17 in. high)

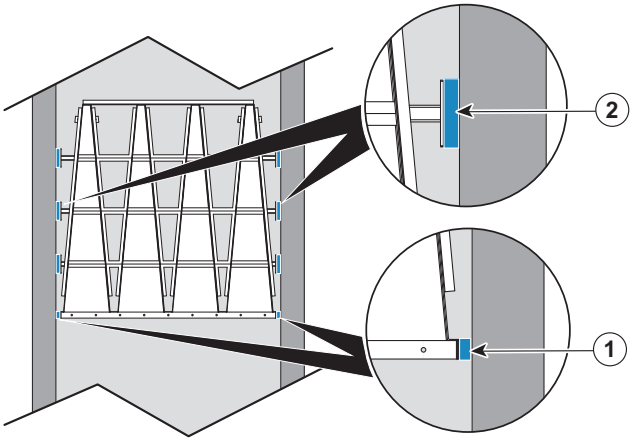

Figure 10 Trapezoidal Weir (> 17 in. high)

1	Install grout (and shims, if required) between wall and vertical flanges	**2**	Install grout between the wall and supports

Note: *Install grout between the wall and side supports where weir side supports are provided. DO NOT fill space between the channel wall and the weir finger or fill the downstream space between the fingers.*

8. Install anchors to attach the vertical flanges to the channel side walls.

9. Apply marine grade sealant to all of the weir edges to form a water-tight seal. Refer to Item #3 in Figure 11, Figure 12, Figure 13 and Figure 14. The water should flow over the weir instead of around the edges. Make sure that there are no leaks in the weir.

NOTICE

DO NOT fill the downstream space between the fingers with grout, concrete or other fill, including between the weir and the UV Channel wall.

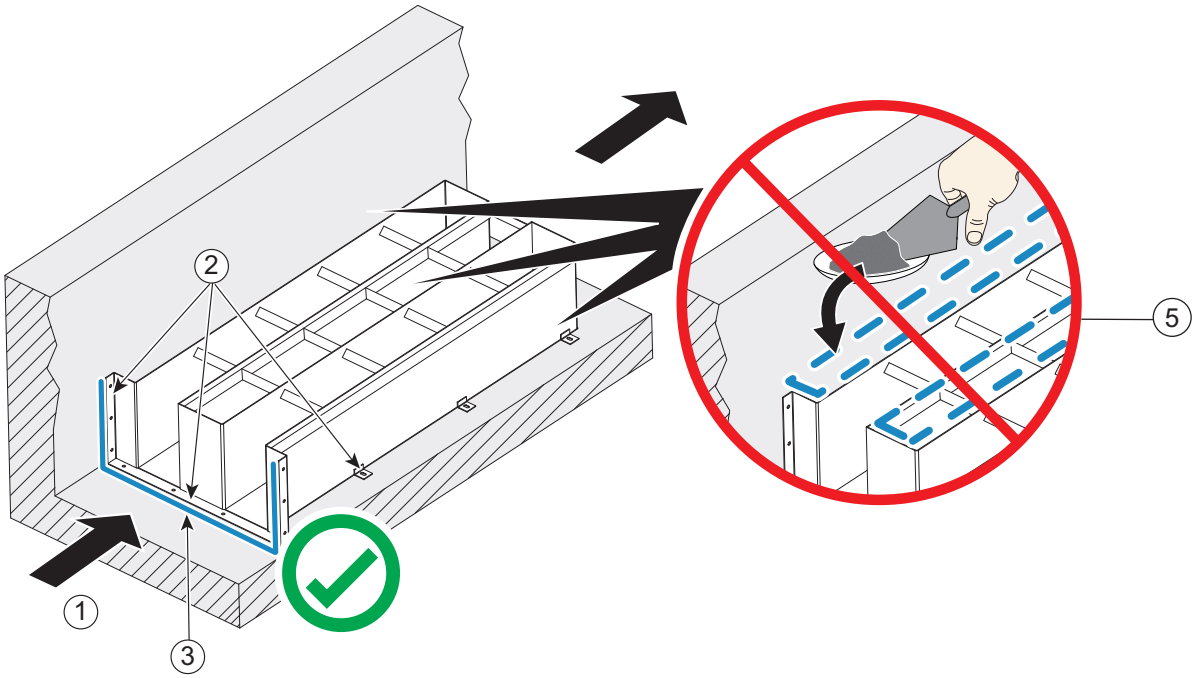

Figure 11 Rectangular Serpentine Weir without side supports

1	Channel Flow Direction	**4**	Drain (not shown) – located on downstream side of weir
2	Weir anchor locations (quantity varies)	**5**	DO NOT BACKFILL this space
3	Install marine grade sealant along this length		

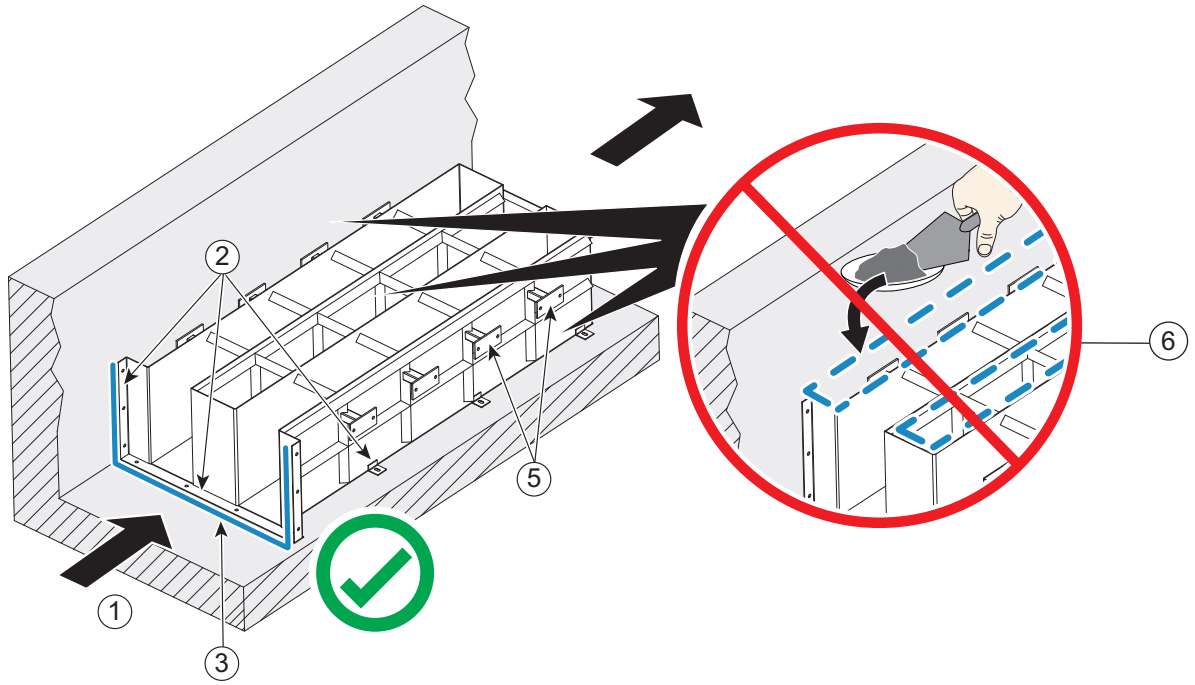

Figure 12 Rectangular Serpentine Weir with side supports

1	Channel Flow Direction	**4**	Drain (not shown) – located on downstream side of weir
2	Weir anchor locations (quantity varies)	**5**	Side Supports - DO NOT fasten to the UV Channel wall
3	Install marine grade sealant along this length	**6**	DO NOT BACKFILL this space

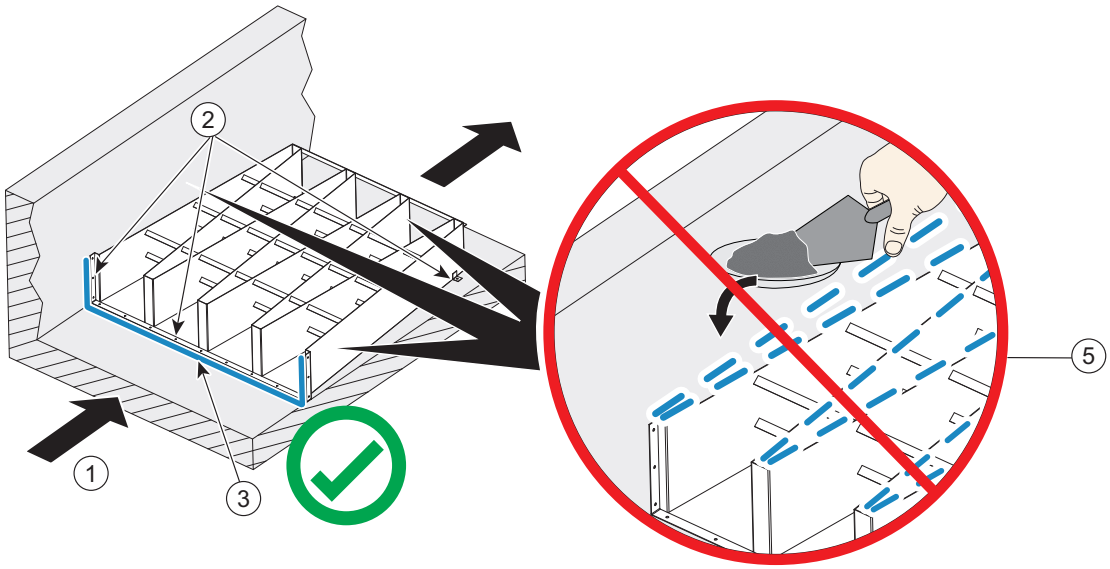

Figure 13 Trapezoidal Weir without side supports

1	Channel Flow Direction	**4**	Drain (not shown) – located on downstream side of weir
2	Weir anchor locations (quantity varies)	**5**	DO NOT BACKFILL this space
3	Install marine grade sealant along this length		

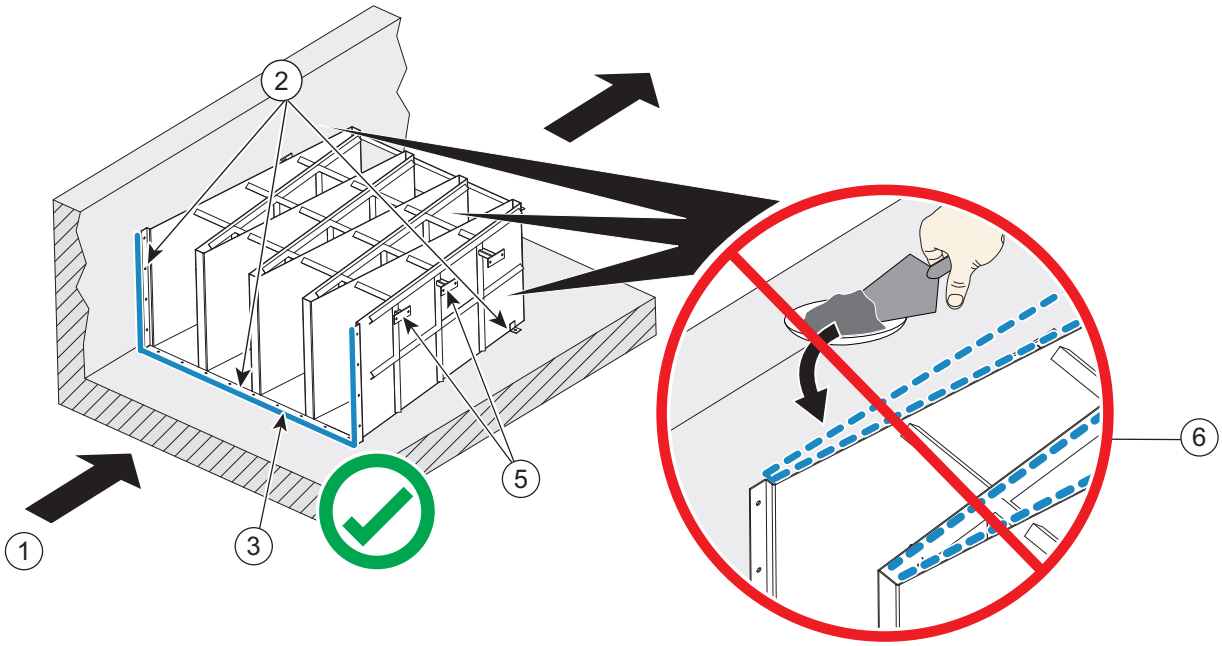

Figure 14 Trapezoidal Weir with side supports

1	Channel Flow Direction	**4**	Drain (not shown) – located on downstream side of weir
2	Weir anchor locations (quantity varies)	**5**	Side Supports - DO NOT fasten to the UV Channel wall
3	Install marine grade sealant along this length	**6**	DO NOT BACKFILL this space

3.3 Fixed Rectangular Weir

Prerequisites:

- Make sure the channel is free of water upstream and downstream.
- **Make sure that the elevations of the weir to the bottom of the channel floor, top of the channel and the weir riser conform to tolerances indicated in the layout drawing.**

  Note: *Refer to project layout drawing for dimensions. Adhering to the provided dimensions is critical for the proper functioning of the weir.*

- After the weir is installed and is leveled, ensure that the elevation to the top of the weir conforms to the elevation shown on the layout drawing.

Tools:

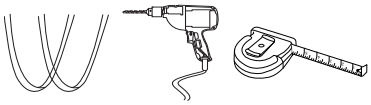

Materials:

- Stainless steel spacers

Procedure:

1. Put the weir in place for final installation, center the weir in the UV Channel.

   Note: *The weir is designed to be 6 - 10mm (1/4 - 3/8 in.) narrower than the channel width at the designated weir installation location.*

NOTICE

DO NOT stretch or compress the weir to fit in the channel. If gap between the channel and weir vertical flanges is less than 6mm (1/4 inch) on either side, fill gap with 316 stainless steel spacers. If the gap is wider, fill with grout. If the weir is wider than the channel, increase the width of the channel.

2. Mark the holes in the weir mounting brackets.

   Note: *The number of mounting holes is based on the total length of the weir.*

3. Remove the weir and drill holes for anchor bolts.

   Note: *Bolt lengths are specified by local building code.*

4. Place 2 beads of marine grade sealant along the length of the bottom mounting flange on the top of the wall.

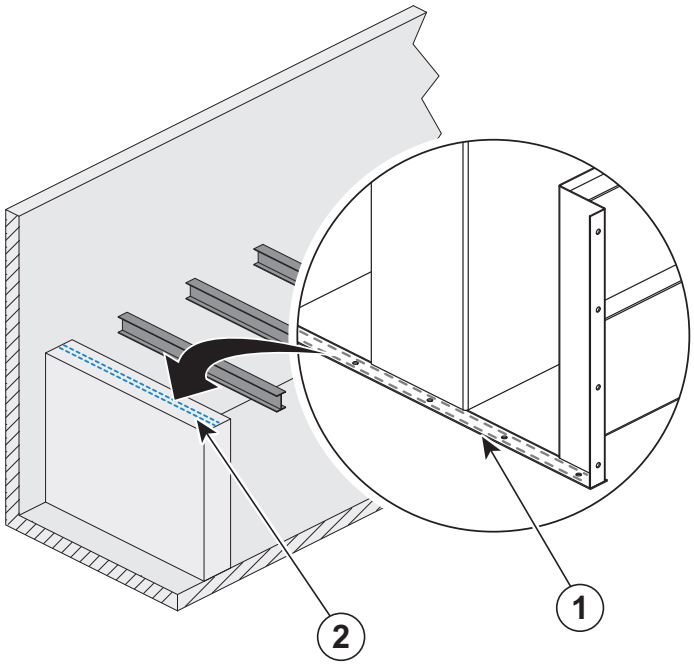

Figure 15 Fixed Rectangular Weir

1	Mounting Flange	**2**	Sealant applied on top of channel wall

5. Put the weir back into position for installation:
   a. Attach the weir to the support wall with mounting hardware.
   b. Attach the weir to the support beams with mounting hardware.
6. If the channel width is:
   a. Sized such that the gap between the channel wall and weir vertical flanges is less than 6mm (1/4 inch), install shims to fill the gap (Item #1, Figure 16 and Figure 17).
   b. Sized such that the gap between the channel wall and weir vertical flanges is greater than 6mm (1/4 inch), install grout in the space between the vertical mounting flanges and the wall (Item #1, Figure 16 and Figure 17).

7. Install grout between wall and support flanges. Refer to Item #2 in Figure 17.

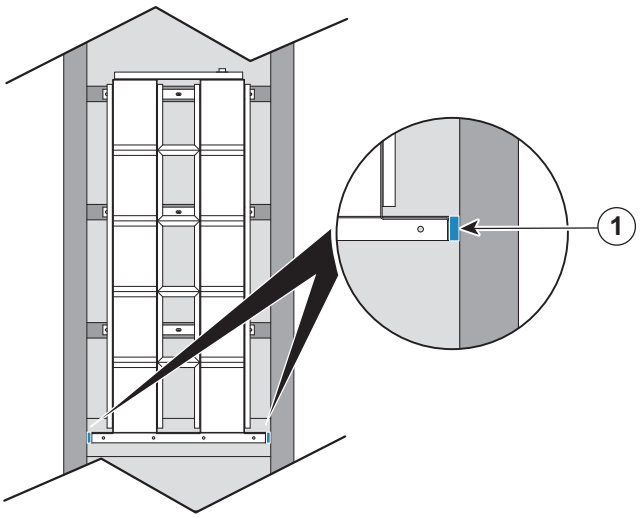

Figure 16 Fixed Rectangular Weir without side supports

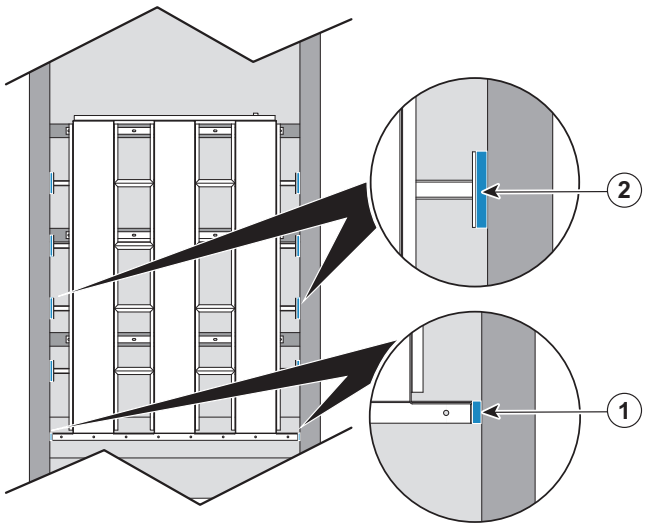

Figure 17 Fixed Rectangular Weir with side supports

1	Install grout (and shims, if required) between wall and vertical flanges	**2**	Install grout between the wall and supports

8. Install anchors to attach the vertical flanges to the channel side walls.
9. Apply marine grade sealant to all of the weir edges to form a water-tight seal. Refer to Item #2 in Figure 18 and Figure 19. The water should flow over the weir instead of around the edges. Make sure that there are no leaks in the weir.

NOTICE

DO NOT fill the downstream space between the fingers with grout, concrete or other fill, including between the weir and the UV Channel wall.

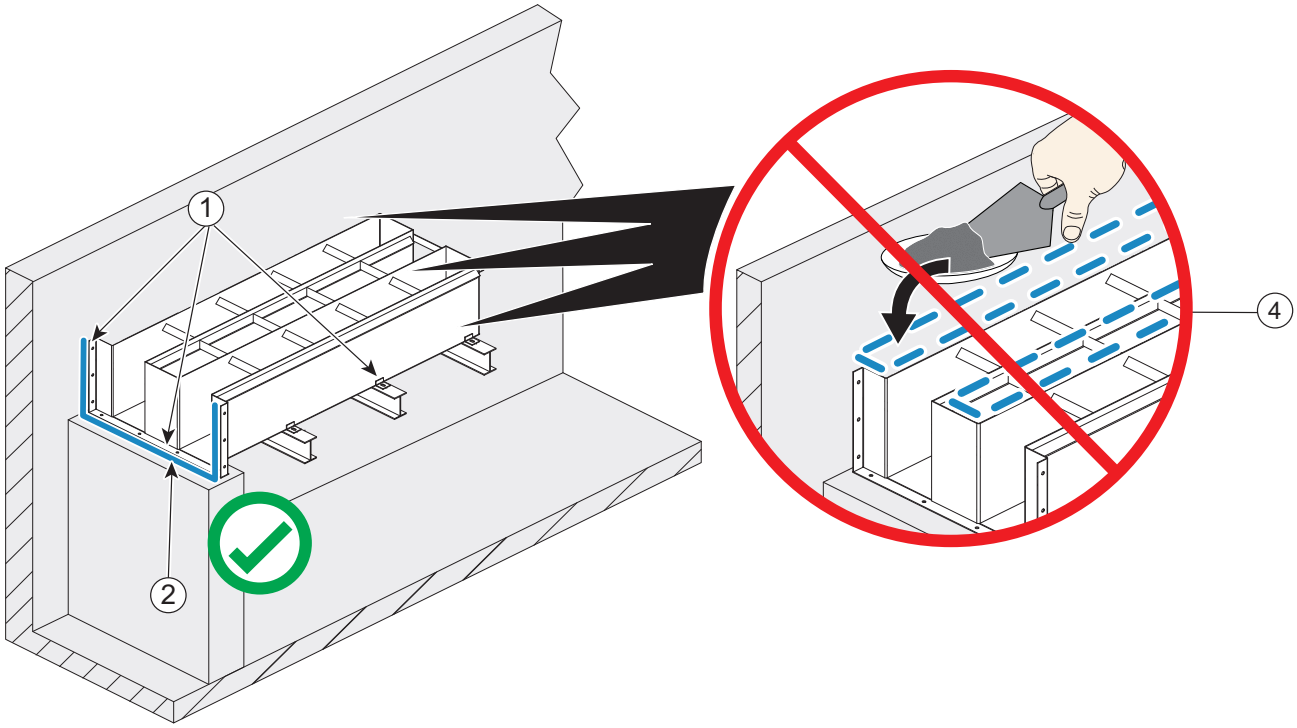

Figure 18 Fixed Rectangular Weir without side supports

1	Weir anchor locations (quantity varies)	**3**	Drain (not shown) – located on downstream side of weir
2	Install marine grade sealant along this length	**4**	DO NOT BACKFILL this space

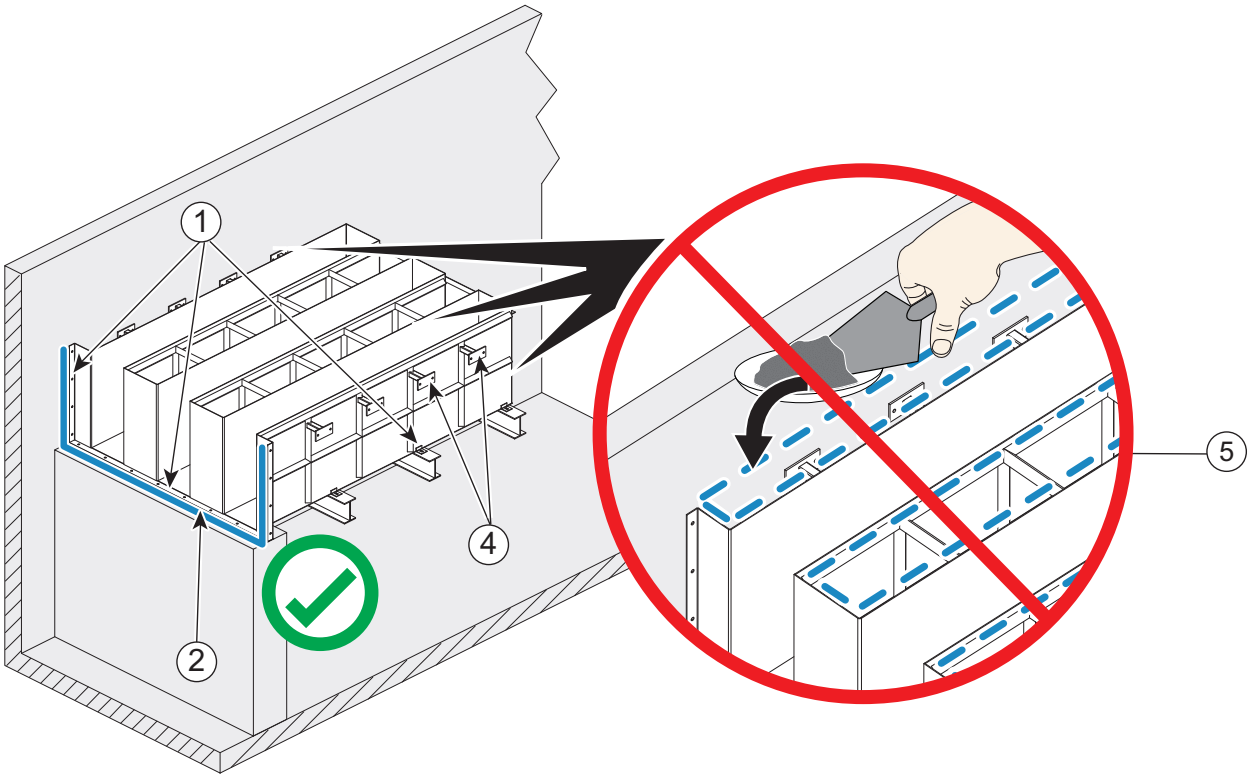

Figure 19 Fixed Rectangular Weir with side supports

1	Weir anchor locations (quantity varies)	**4**	Side Supports - DO NOT fasten to the UV Channel wall
2	Install marine grade sealant along this length	**5**	DO NOT BACKFILL this space
3	Drain (not shown) – located on downstream side of weir		

⚠ DANGER

Obey all warning and caution statements. Refer to Section 1.

Read and understand this Operation and Maintenance Manual before operating this equipment. Read all user documentation before performing operations, inspections, repair, or maintenance on this equipment.

Only competent personnel should undertake operation, repairs, maintenance, or servicing of equipment described in this section of the manual. If you do not understand the information or procedure explanations in this manual, STOP and contact your Service Provider for assistance.

4.1 Preventive Maintenance Schedules

Table 1 shows required periodic maintenance.

Table 1 Required Preventive Maintenance Schedule

System Component	Maintenance Requirement	Bi-Weekly	Monthly	Annually
Water Level Control	Inspect for debris and remove as needed. Perform once every two weeks for poor water quality conditions.	X	X	
	Inspect grouting/seals and repair/replace if any signs of cracking or damage			X

4.2 Inspect and Clean the Level Controller

Tools:

- Pressure Washer

Materials:

- Water

Procedure:

1. Inspect the crest of the weir periodically.
2. If necessary, use a power washer to remove algae or other buildup. Clean up spills.

INSTRUCTION

PRODUCT LINE:	TROJANUVSIGNA™	**DOCUMENT NUMBER:**	DC090601-006
TOPIC:	INSTRUCTION, LEVEL SENSOR CONTROL BOX INSTALLATION AND MAINTENANCE	**EDITION/REVISION:**	01-02

1. OVERVIEW

The Level Sensor Control Box is a standalone panel which contains power relays for the Low Level Sensor, optional High Level Sensor and optional Ultrasonic Level Sensor. Upon installation completion and system start-up, the panel will not require further adjustment.

2. SAFETY PRECAUTIONS

⚠ DANGER

Arc Flash and Shock Hazard - Live Electrical Circuit Present.

- Failure to follow these instructions will result in electrical shock, injury or death from electrocution.
- Devices inside this equipment contain stored energy.
- NEVER work inside this equipment until at least 5 (five) minutes after disconnecting main power to allow stored energy to dissipate.
- Lockout tag out all sources of power before performing any inspection, repair, or maintenance. ***There may be more than one source of power!***

NOTICE

Personal Protective Equipment Required.

- ALWAYS use appropriate eye, hand, and foot protection.
- ALWAYS wear UV-C safety glasses when around equipment or a UV-C faceshield with safety glasses or safety goggles when inspecting open running equipment.
- ALWAYS follow plant safety procedures and protocols.
- ALWAYS take necessary precautions when working around, operating, or working on this equipment, if contamination of components is expected within this application due to effluent biological or chemical contaminants.

NOTICE

Only competent personnel should undertake operation, repairs, maintenance, or servicing of equipment described in this manual. Maintain the continuity of the lockout tag out between shifts. If you do not understand the information or procedure explanations in this manual, STOP and contact your Service Provider for assistance.

Note: *Dispose of contaminated parts/components as per country requirements.*

3. PREREQUISITES

- Shutdown the UV System. Refer to the Operation and Maintenance Manual.
- Apply Lockout and Tag Out devices as necessary. Refer to Operation and Maintenance Manual.
- Clear area where the Level Sensor Control Box will be installed. Refer to project layout drawings.

4. TOOLS

	Lifting Straps - adequately rated for UV Bank weight		Power Drill
	Measuring Tape		Level

5. MATERIALS

- Anchor Bolts (by others)

6. INSTALLATION

6.1 Mounting the Level Sensor Control Box

1. Lift the enclosure into the final installed position.
2. Mark the anchor points on the wall. Set aside the enclosure.

   Note: *Level Sensor Control Box can alternatively be installed on a pedestal.*
3. Drill anchor bolt holes and install 6 mm (1/4 inch) anchors.
4. Install the enclosure onto the anchors. Secure with mounting hardware as per local codes.

6.2 Electrical Installation

Prerequisites:

- Use appropriately rated cable and strain reliefs as per the Electrical and Layout Drawings provided by Trojan Technologies.
- Lockout Tag Out devices as necessary. Refer to Operation and Maintenance Manual.

Tools:

	Power Drill with Bits

Materials:

	Cloth

6.3 PROCEDURE

1. Locate the location for the incoming power connection and field connections on the underside of the enclosure.
2. Open the enclosure door, put a cloth over equipment inside to protect from metal filings.
3. Drill holes for incoming power and field wiring.
4. Carefully remove the protective cloth without dropping metal filings inside of the enclosure. Remove all filings from the enclosure.
5. Install the power and all applicable field wiring. Obey all local codes for main incoming power supplies and applicable field wiring. Refer to electrical drawings.

Note: *All openings created on the cabinets MUST be filled with equipment marked with the same type rating as the enclosure (Ex. Cable Strain Reliefs).*

7. MAINTENANCE

7.1 Clean the Level Sensor Control Box

Prerequisites:

- Shut down the UV system. Refer to the Operation and Maintenance manual.
- Lockout Tag Out devices as necessary. Refer to Operation and Maintenance Manual.

Materials:

	Soapy Water		Cloth

Procedure

1. Use a mild soap and water solution and a damp sponge or soft cloth.
2. Gently wipe the controller exterior to remove debris.

Note: *DO NOT use any corrosive cleansers.*

8. TROUBLESHOOTING

In the event of a Low Level Signal fault (refer to TrojanUVSigna™ Operation and Maintenance Manual - Troubleshooting), where a power failure to the sensor is identified, the following steps are suggested to troubleshoot potential causes:

Prerequisites:

- Check power supply and relays for functionality.
- Lockout Tag Out devices as necessary. Refer to Operation and Maintenance Manual.

Materials:

Troubleshoot:

1. Open panel and check wires for loose connections.
2. Conduct a conductivity test on wiring to ensure there is no problem in the wiring.

8. ASSISTANCE

If you require technical assistance, please contact your local representative. If you require additional assistance, please contact the Technical Assistance Center (TAC) using the contact information below:

North America:	1-866-388-0488
All other areas:	1-519-457-2318
E-mail:	tac@trojanuv.com

At the time of publishing, the information within this document is current. Due to continuous improvements, we may have future changes and recommendations which will be sent via product bulletins.

PRODUCT LINE:	TROJANUVSIGNA™(Type 2 Row)	**DOCUMENT NUMBER:**	DC340601-007
TOPIC:	INSTRUCTION, LAMP CABLE ROUTING INSIDE PDC	**EDITION / REVISION:**	01-02

1. OVERVIEW

The procedure below describes the appropriate steps and safety precautions to follow in order to route and connect the Lamp cables to the Lamp Drivers in the Power Distribution Center (PDC).

2. SAFETY PRECAUTIONS

Read the safety precautions in this section before doing maintenance, service or repair. Obey the instructions in the safety precautions. Failure to follow the instructions in the safety precautions can result in serious injury or death.

⚠ DANGER

Arc Flash and Shock Hazard - Live Electrical Circuit Present. Hazardous Voltage.

- Failure to follow these instructions will result in electrical shock, injury or death from electrocution.
- Devices inside this equipment contain stored energy.
- NEVER work inside this equipment until at least 5 (five) minutes after disconnecting main power to allow stored energy to dissipate.
- Lockout tag out all sources of power before performing any inspection, repair, or maintenance. ***There may be more than one source of power!***

NOTICE

Personal Protective Equipment Required.

- ALWAYS use appropriate eye, hand, and foot protection.
- ALWAYS wear UV-C safety glasses when around equipment or UV-C face shield with safety glasses or safety goggles when inspecting open running equipment.
- ALWAYS follow plant safety procedures and protocols.
- ALWAYS take all necessary precautions when working around, operating, or working on this equipment, contamination of components is expected within this application due to effluent biological or chemical contaminants.

NOTICE

Only competent personnel should undertake operation, repairs, maintenance, or servicing of equipment described in this manual. Maintain the continuity of the lockout tag out between shifts. If you do not understand the information or procedure explanations in this manual, STOP and contact your Service Provider for assistance.

***Note**: Dispose of contaminated parts/components as per country requirements.*

3. PRE-REQUISITES

- Apply Lockout Tag Out devices as necessary. Refer to Operation and Maintenance Manual.
- Review PDC Wiring Diagrams
- Apply temporary wiring labels to both ends of each Lamp Cable.
- Connect UV Lamp Connectors to the Lamp Ports at the UV Bank. Route Lamp Cables to the PDC.

4. TOOLS

	Wire Side Cutter		Ferrule Crimper		Utility Knife
	Cable Jacket Stripper		Terminal Screwdriver		Wire Stripper

5. MATERIALS

- Lamp Cables (provided)
- Lamp Wire Labels (provided)
- Ferrules, four (4) required for Lamp Cables (by others)
- PDC Wiring Diagrams (provided)
- Lamp Cable Connectors (provided)
- Electrical Tape or Heat Shrink

6. LAMP DRIVER OVERVIEW

6.1 UV Bank Lamp Row and UV Lamp Identification

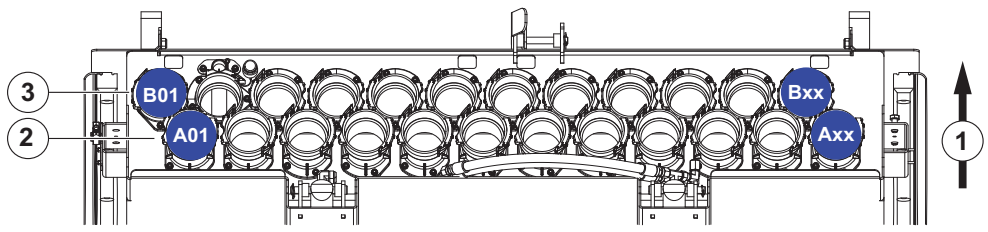

Figure 1 Lamp Row and UV Lamp Identification

1	Effluent Flow Direction	**2**	Lamp Row A
3	Lamp Row B		

***Note**: The number of lamps varies by project. Replace "xx" with the number of UV Lamps per row applicable to your UV Bank.*

6.2 PDC Section Layouts with Wire Routing and Lamp Numbering

***Notes: 1)** Arrows shown indicate lamp cable routing path.*
***2)** Refer to Electrical Drawings for project specific Lamp Driver / UV Bank Layout.*

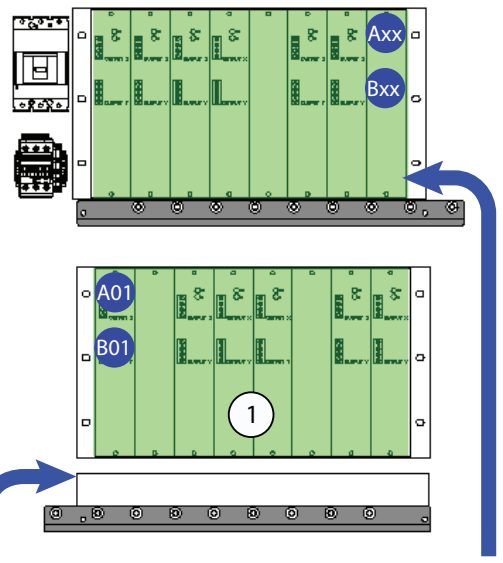

Figure 2 Example - One (1) UV Bank, 18-24 UV Lamps per UV Bank

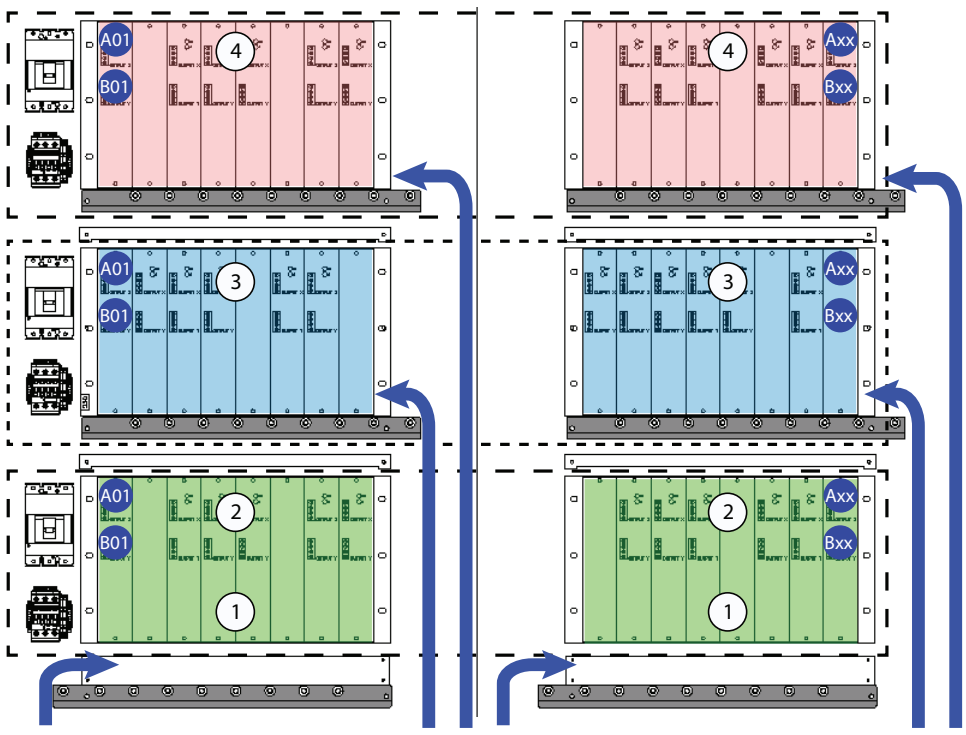

Figure 3 Example - Three (3) UV Banks, 18-24 UV Lamps per UV Bank

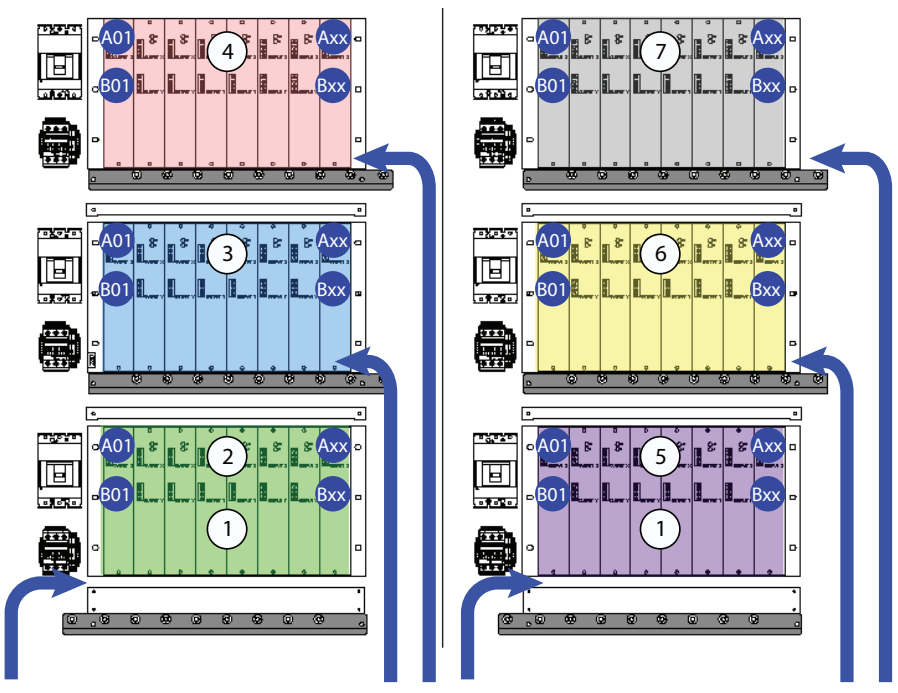

Figure 4 Example - Six (6) UV Banks, 8-16 UV Lamps per UV Bank

1	Lowest Lamp Driver Rack	**2**	Bank A
3	Bank B	**4**	Bank C
5	Bank D	**6**	Bank E
7	Bank F		

7. PROCEDURE

1. Route three lamp cables through each strain relief in bottom of panel starting with POSITION A01 until all cables have been run. Pull the Lamp Cables all of the way through the strain relief.

Notes: 1) *"Position A01" will be the first lamp on the Lowest Lamp Driver Rack depending on the PDC side that is being wired.*

2) *Do not apply wire labels at this time, they are to be applied in step 2C.*

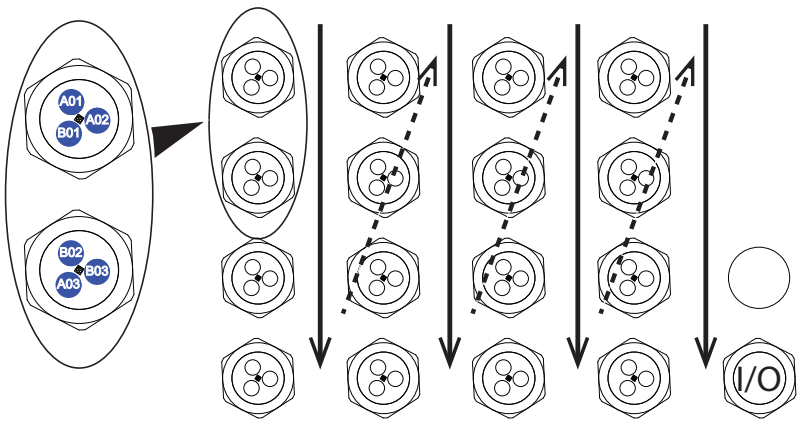

Note*: Make sure all unused strain relief holes are plugged.*

2A. **Refer to the provided electrical drawings for Lamp Cable to Lamp Driver wiring.** Route cables on the left side to each Lamp Driver in the Lower Left and Lower Right Racks starting with POSITION A01. Route cables through cable supports as shown, starting with CABLE A.

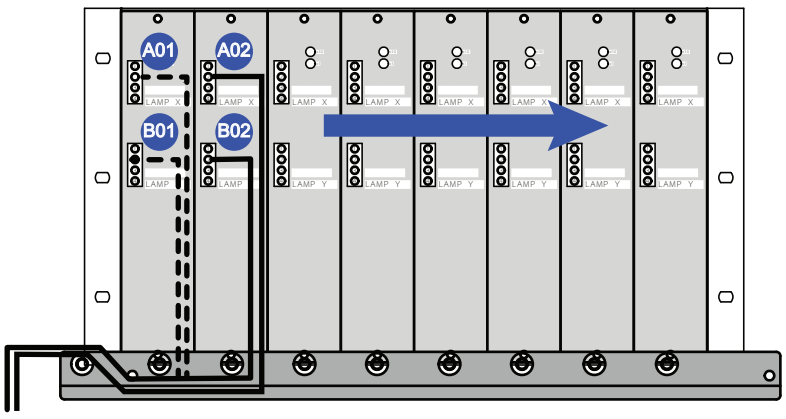

Figure 5 Lower Left or Lower Right Driver Rack

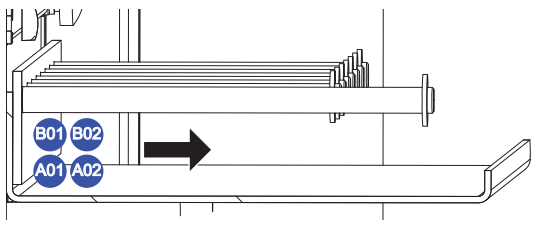

2B. Determine length of cable needed to reach the lamp connection point on the Lamp Driver, remove excess slack and cut the cable to length.

2C. Remove approximately 15cm (6") of cable insulation, ferrule each conductor, connect to Lamp Driver connector. Repeat Steps 2A to 2C for each cable.

Notes: 1) ** = Top when connected to the Lamp Driver.*

2) *Apply heat shrink or electrical tape after stripping the jacketing.*

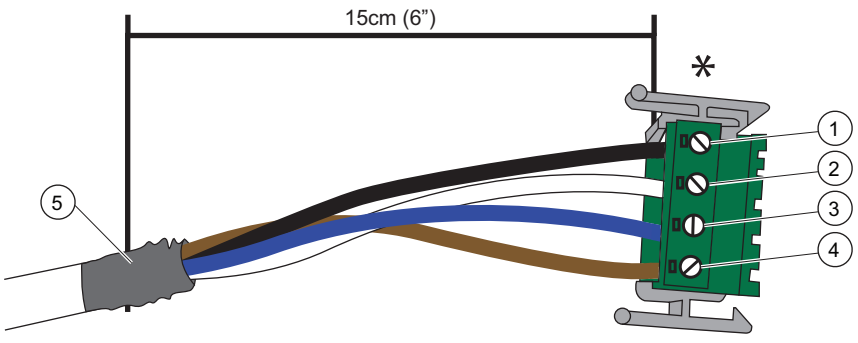

1	Pin 1 - Black	**2**	Pin 2 - White
3	Pin 3 - Blue	**4**	Pin 4 - Brown
5	Electrical Tape or Heat Shrink		

3. **For cable routing purposes only** (Figure 6)**. Refer to the provided electrical drawings for Lamp Cable to Lamp Driver wiring:**

- For Lamp Driver Racks in the middle or top position, route and land cables beginning on the right side of the Lamp Driver Rack. Install the first lamp cable in the upper most position (i.e. I). Install the next Lamp Cable into the (II) position, and so on. Move right to left until complete.

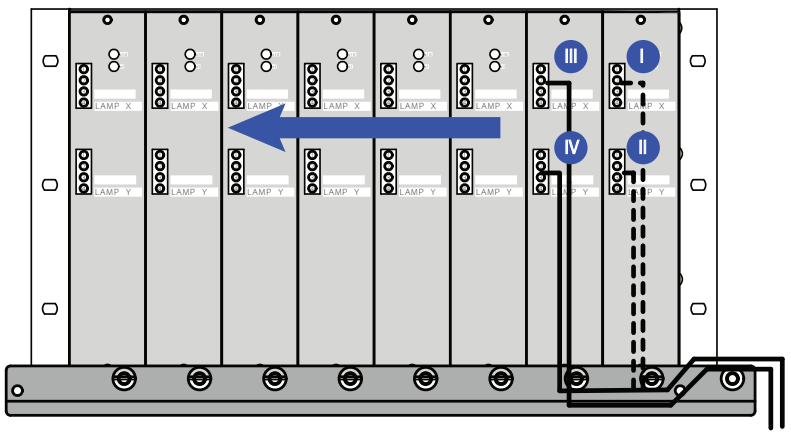

Figure 6 All Other Lamp Driver Racks

8. ASSISTANCE

If you require technical assistance, please contact your local representative. If you require additional assistance, please contact the Technical Assistance Center (TAC) using the contact information below:

North America:	1-866-388-0488
All other areas:	1-519-457-2318
E-mail:	tac@trojanuv.com

At the time of publishing, the information within this document is current. Due to continuous improvements, we may have future changes and recommendations which will be sent via product bulletins.

INSTRUCTION

PRODUCT LINE:	TROJANUVSIGNA™ (ALL TYPES) TROJANUVFLEX™	**DOCUMENT NUMBER:**	DC000601-019
TOPIC:	INSTRUCTION, HOSE ASSEMBLY FIELD CONNECTION	**EDITION/REVISION:**	01-02

1. OVERVIEW

The procedure below provides the appropriate steps and safety precautions to follow in order to install fittings onto hydraulic hoses.

2. SAFETY PRECAUTIONS

Read the safety precautions in this instruction before starting the procedure. Obey the instructions in the safety precautions. Failure to follow the instructions in the safety precautions can result in serious injury or death.

NOTICE

Personal Protective Equipment Required.

- ALWAYS use appropriate eye, hand, and foot protection.
- ALWAYS wear UV-C safety glasses when around equipment or UV-C face shield with safety glasses or safety goggles when inspecting open running equipment.
- ALWAYS follow plant safety procedures and protocols.
- ALWAYS take all necessary precautions when working around, operating, or working on this equipment, contamination of components is expected within this application due to effluent biological or chemical contaminants.

NOTICE

Only competent personnel should undertake operation, repairs, maintenance, or servicing of equipment described in this manual. Maintain the continuity of the lockout tag out between shifts. If you do not understand the information or procedure explanations in this manual, STOP and contact your Service Provider for assistance.

***Note**: Dispose of contaminated parts/components as per country requirements.*

3. TOOLS

	Hacksaw	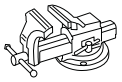	Bench Vise
	Wrench 7/16”		Wrench 11/16”

4. MATERIALS

- Hydraulic Hose (provided)
- Hose Fittings (provided)
- Hydraulic Oil (**Mineral Oil or Pure Drive as provided**)

5. PROCEDURE

Note: *The field connect fitting is to be used on the HSC connection only. The pre-crimped end of hose is to be connected to the UV Bank.*

Remove protective plastic film from hose ends.

Note: *The hose end with the hose fitting is to be connected to the UV Bank cylinder.*

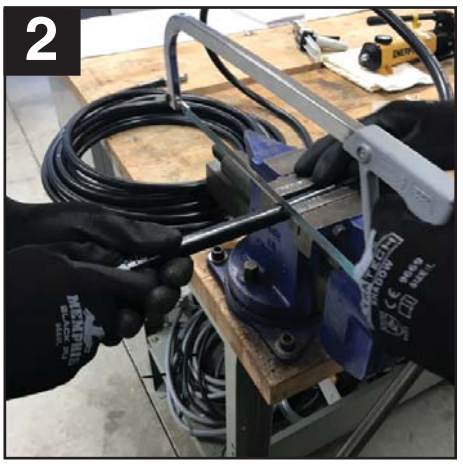

Identify and mark the overall length of hose required.

Place hose in a bench vise. Apply only enough pressure to hold the hose, do not compress the hose. Cut off excess hose length.

Install colored hose bands. Refer to the Operation and Maintenance Manual.

Ensure that the cut end of the hose is clean and free of any debris.

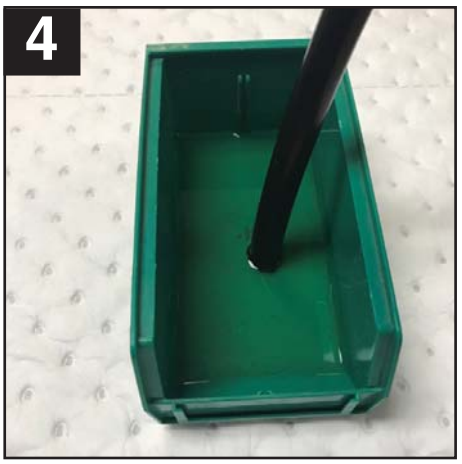

Keep the cut end facing downward.
Dip the end of the cut hose in provided hydraulic fluid.

Insert hose into bench vise, leave 50mm (2 inch) hose extending from the vise.

Thread the hose fitting onto the hose by turning it ***counter clockwise*** until it bottoms. Back the fitting out 1/2 turn.

There will be significant resistance, the fitting may require the use of a wrench to complete the install.

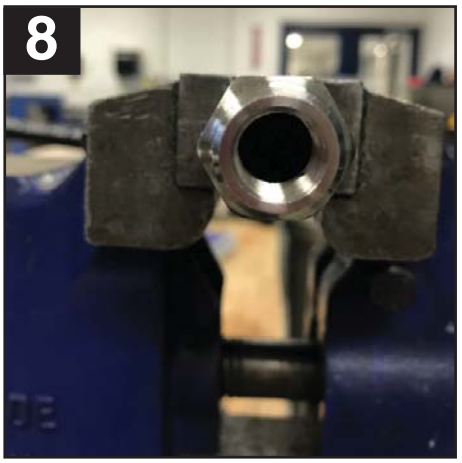

View from the fitting end to verify that the hose is fully seated in the fitting.

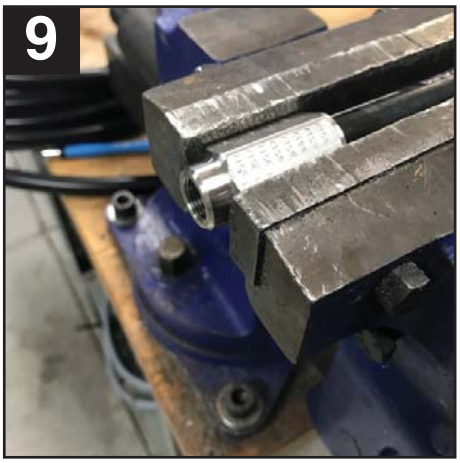

Remove the hose from the vise, re-clamp on the fitting.

Dip the fitting insert in hydraulic fluid.

Thread the insert into the fitting by turning clockwise.

Note: *There will be significant resistance, the fitting may require the use of a wrench to complete the install.*

Verify that the insert is fully seated in the fitting. The gap between the hose and the hose fitting is to be no greater than 2mm.

Remove the hose from the bench vise.

6. POST-REQUISTIES

1. Connect the field fitting end of the hose to the HSC. Refer to the Operation and Maintenance Manual.
2. Repeat all steps for remaining hoses.

7. ASSISTANCE

If you require technical assistance, please contact your local representative. If you require additional assistance, please contact the Technical Assistance Center (TAC) using the contact information below:

North America:	1-866-388-0488
All other areas:	1-519-457-2318
E-mail:	tac@trojanuv.com

At the time of publishing, the information within this document is current. Due to continuous improvements, we may have future changes and recommendations which will be sent via product bulletins.

INSTRUCTION

PRODUCT LINE:	TROJANUVSIGNA™ (All Models)	**DOCUMENT NUMBER:**	DC000601-013
TOPIC:	INSTRUCTION, REFERENCE SENSOR PROCEDURE	**EDITION/REVISION:**	02-02

1. OVERVIEW

The Reference UVI Sensor is used to provide comparative values over time to demonstrate continued good (satisfactory) operation of the Duty UVI Sensor. The Reference UVI Sensor is designed to be mounted into the same sensor port and sensor sleeve as the Duty UVI Sensor.

The Reference UVI Sensor uses the same type of material and is identical in calibration to the Duty UVI Sensor. The Reference UVI Sensor is provided with its own protective case and is to be stored in a dry, warm, and clean environment.

The Reference Sensor Procedure can begin once all the Prerequisites have been met.

2. SAFETY PRECAUTIONS

⚠ DANGER

Arc Flash and Shock Hazard - Live Electrical Circuit Present.

- Failure to follow these instructions will result in electrical shock, injury or death from electrocution.
- Equipment should be accessed by competent personnel only.
- Devices inside this equipment contain stored energy.
- NEVER work inside this equipment until at least 5 (five) minutes after disconnecting main power to allow stored energy to dissipate.
- Lockout tag out all sources of power before performing any inspection, repair, or maintenance. ***There may be more than one source of power!***

⚠ DANGER

Fall Hazard.

- Failure to follow these instructions will result in injuries due to fall.
- Always use appropriate fall resistant procedures and equipment while working near an uncovered channel, when a fall hazard is present, in compliance with local regulations.

⚠ CAUTION

UV Light Hazard.

- Failure to follow these instructions may result in serious burns to unprotected eyes and skin.
- ALWAYS use UV protective gear, including gloves, clothing, and face shield when UV light is present.
- NEVER look directly at illuminated UV lamp, even with protective gear.
- NEVER illuminate UV lamp if personnel may be directly exposed to UV light.

NOTICE

Personal Protective Equipment Required.

- ALWAYS use appropriate eye, hand, and foot protection.
- ALWAYS wear UV-C safety glasses when around equipment or a UV-C faceshield with safety glasses or safety goggles when inspecting open running equipment.
- ALWAYS follow plant safety procedures and protocols.
- ALWAYS take necessary precautions when working around, operating, or working on this equipment, if contamination of components is expected within this application due to effluent biological or chemical contaminants.

NOTICE

Only competent personnel should undertake operation, repairs, maintenance, or servicing of equipment described in this manual. Maintain the continuity of the lockout tag out between shifts. If you do not understand the information or procedure explanations in this manual, STOP and contact your Service Provider for assistance.

***Note**: Dispose of contaminated parts/components as per country requirements.*

3. PREREQUISITES

- Ensure the UV Bank has been operating for a minimum of 20 minutes.

  ***Note:** The Reference Sensor procedure button will only display if:*
  - Lamp 4 is on with no major faults ***(Type 2 Row only)***
  - Lamp A1 is on with no major faults ***(Type 4 and 6 Row only)***
  - UV Bank is in operation (UV Bank is ON and not in warm-up or timing-off)
  - UV Bank Wipe is not in progress
  - UV Bank is communicating with SCC

4. TOOLS

- Reference UVI Sensor

5. MATERIALS

- Reference Sensor Data Sheets
- Reference Sensor
- Kimwipes
- Alcohol wipes
- TrojanUVSigna™ Operation and Maintenance Manual

6. PROCEDURE

1. Bank Overview screen ⟶ Reference Sensor button.
2. If the Realtime Sensor Reading (Figure 1) is greater than 19mA, and the UV bank mode is in Local ON, change the UV bank mode to Remote ON or Remote Auto.

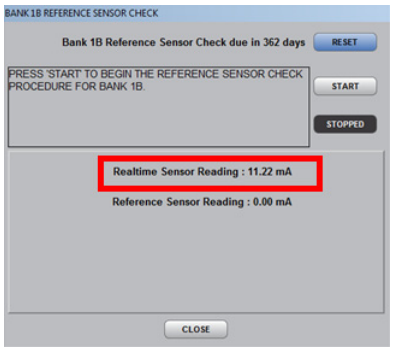

Figure 1 Realtime Sensor Reading

3. Press START (Figure 2) → The BCB will increase bank power to 100% and wait for the Realtime Sensor Reading to stabilize.

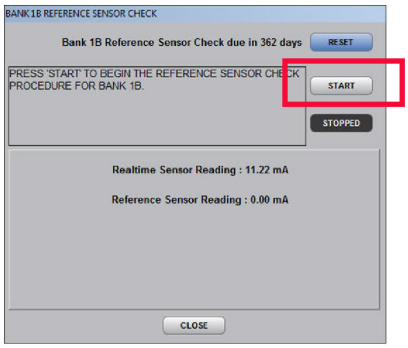

Figure 2 Reference Sensor Check

4. If the Realtime Sensor Reading (Figure 1) is greater than 19mA, reduce power in 10% increments (Figure 3) until the reading is equal to or lower than 19mA.

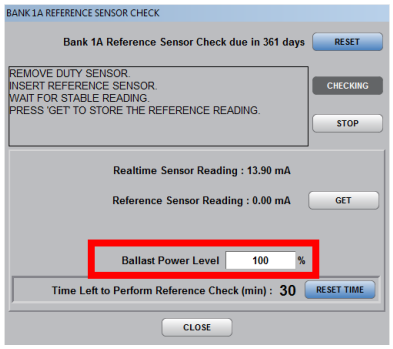

Figure 3 Reference Sensor - Ballast Power Level

5. Once the Realtime Sensor Reading is stable, remove the Duty UVI Sensor and insert the Reference UVI Sensor. Refer to Operation and Maintenance Manual.

6. Once the Reference Sensor Reading has stabilized, press the GET button for the Reference Sensor Reading (Figure 4).

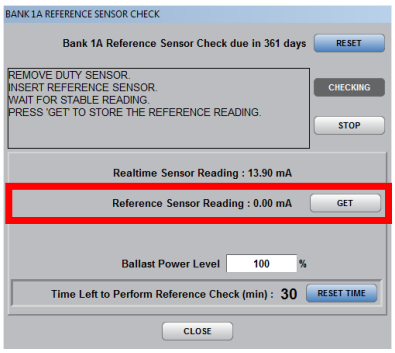

Figure 4 Reference Sensor - GET Screen

7. Record the value (mA) on the Reference Sensor Data Sheet in the **Reference Sensor Reading (B)** column.
8. Remove the Reference UVI Sensor and insert the Duty UVI Sensor. Refer to Operation and Maintenance Manual.
9. Once the Duty Sensor Reading has stabilized, press the GET button for the Duty Sensor Reading (Figure 5).

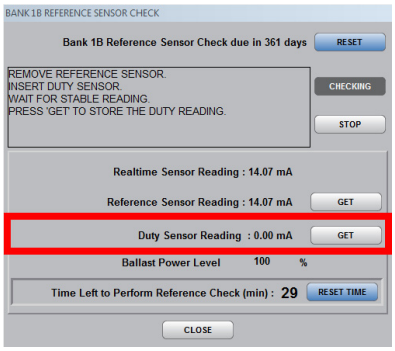

Figure 5 Duty Sensor - GET Screen

10. Record the value (mA) on the Reference Sensor Data Sheet in the **Duty Sensor Reading (A)** column.
11. Press the STOP button to end the Reference Sensor Procedure.
12. Push RESET when procedure is complete to reset the time until next calibration.

    Note: *The top of the window displays the days left for performing the reference sensor check.*

13. Calculate the **Calibration Ratio (A-4 / B-4)** as shown on the REFERENCE SENSOR DATA SHEET. Record the value.REFERENCE SENSOR DATA SHEET

TrojanUV Reference Sensor Procedure Data Sheet

Based on the 2006 'EPA Disinfection Guidance Manual for the Final LT2ESWTR.

Date: _____ **System Type:** UVSIGNA:

Site: _____ **Operator:** _____

%UVT: _____ **Sensor Saturation Cut-Off Level:** _____ **mA**

Bank ID	Sensor ID	Duty Sensor Serial No.	Reference Sensor Serial No.	Duty Sensor Reading (A) (mA)	Reference Sensor Reading (B) (mA)	Calibration Ratio (A – 4) / (B – 4)	Calibration Ratio ≤ 1.2 (Yes/No[1])

Note 1: [Extracted from 2006 EPA Guideline] If calibration ratio is greater than 1.2, verify that the reference UV sensor is accurate with a different reference UV sensor (i.e. verify that the duty UV sensor truly failed the calibration check) by inserting a second reference UV sensor and repeating the reference procedure. If a second reference UV sensor is unavailable, the sensor calibration can be checked against two duty sensors (as opposed to another reference sensor).

8. ASSISTANCE

If you require technical assistance, please contact your local representative. If you require additional assistance, please contact the Technical Assistance Center (TAC) using the contact information below:

North America:	1-866-388-0488
All other areas:	1-519-457-2318
E-mail:	tac@trojanuv.com

At the time of publishing, the information within this document is current. Due to continuous improvements, we may have future changes and recommendations which will be sent via product bulletins.

INSTRUCTION

PRODUCT LINE:	TROJANUVSIGNA® (All Types) TROJANUVFLEX® (All Types) TROJANUVTORRENT™ (All Types) TROJANUVSONUS™	**DOCUMENT NUMBER:**	DC000601-017
TOPIC:	INSTRUCTION, TROJANUV SOLO LAMP® CABLE INSTALLATION GUIDELINE	**EDITION/REVISION:**	02-02

1. OVERVIEW

The TrojanUV Solo Lamp® Plug is a unique design integrating the plug and cable and has been specifically designed as an integral part of the TrojanUV Solo Lamp® technology. The lamp plug is UL recognized for use in TrojanUV systems.

1.1 TrojanUV Solo Lamp Cable Details

General Description	Multi-conductor Cable, Sunlight Resistant, Direct Burial, Oil Resistant, No Shield
Number of Conductors	4 current carrying conductors
Gauge	14AWG copper
Voltage Rating	600V
Temperature Rating	75°C (167°F) Wet, 90°C (194°F) Dry
Nominal Cable O.D	0.378" (9.6mm)
Min. Bend Radius	4.86" (123.4mm)
Flame Rating	c(UL) FT-4
Approvals	UL TC -WTTC c(UL) FT-4
Minimum required ampacity in this application	7A

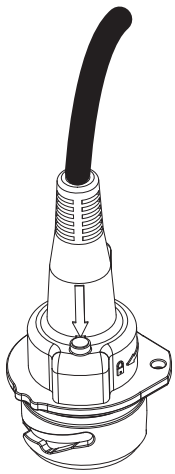

Figure 1 Lamp Plug for TrojanUV Solo® Lamp

2. INSTALLATION GUIDELINES

NOTICE

The following information is a guide for proper installation of the TrojanUV Solo Lamp Cable.

The information stated below is the minimum requirement for conduit and cable tray sizing. Where possible, it is recommended to use a larger conduit or cable tray.

Lamp Cable routing shall NOT be in the same conduit/tray as communication cables or signal wiring from peripheral devices such as flow, level or UVT sensors, gate control, etc. These cables should be routed separately or physically separated (i.e. by a divider in the tray) to reduce potential noise being induced from the lamp cables.

2.1 Installation of Ladder, Ventilated Trough, Wire Mesh, Solid Bottom Cable Trays or Concrete Trough

Minimum Inside Width of Cable Tray or Trough		**Maximum number of lamp cables** *Note: Cables shall be spaced evenly and utilize the full area of the cable tray*	
		Column A	**Column B**
mm	**in.**	**Ladder, Ventilated Trough, Wire Mesh, Solid Bottom Cable Trays or Concrete Trough without Lids/Covers**	**Ladder, Ventilated Trough, Wire Mesh, Solid Bottom Cable Trays or Concrete with Lids/Covers**
50	2	16	10
100	4	31	21
150	6	48	31
200	8	62	42
225	9	70	47
300	12	98	63
400	16	129	84
450	18	146	94
500	20	162	105
600	24	198	126
750	30	244	157
900	36	294	189

Notes: *1) Open grating is not considered a lid/cover.*

2) Solid grating is to be considered a lid/cover.

3) When hydraulic hoses and UV System interconnect wiring is installed together with lamp cables, the space allocated for lamp cables shall not be reduced below the minimum inside width of cable tray listed in the above table

4) Any standard ventilated or solid cable tray cover is to be considered a lid/cover.

5) Standard depth of cable tray is 75mm (3 inches). Deeper cable tray does not affect the maximum number of lamp cables.

6) When a cable tray is placed within a trough, the cable tray width shall be the minimum inside width.

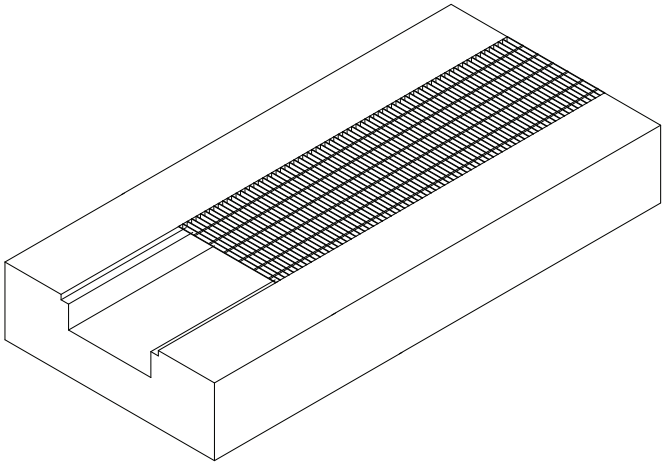

Figure 2 Trough with Open Grating

Refer to Column A

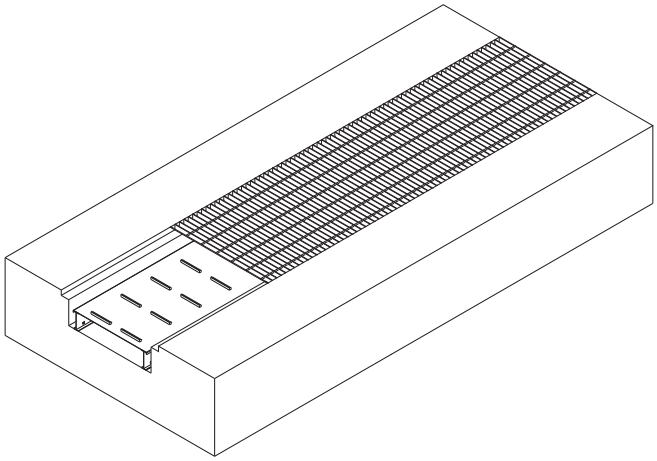

Figure 3 Covered Cable Tray within Trough with Open Grating

Refer to Column B

2.2 Installation of Conduit

When the TrojanUV Solo Lamp Cable is installed in conduit:

a. Conduit fill shall never exceed 20% of the total cross sectional area of the conduit being used.

b. No more than twenty-four (24) lamp cables shall be installed per conduit.

Conduit Size		**Maximum number of lamp cables** ***Note:*** *Fill may vary depending on conduit style and manufacturer's specifications*	
mm	**in.**	**Rigid PVC Conduit**	**Electrical Metallic Tubing (EMT)**
27	1	1	1
35	1.25	2	2
41	1.5	3	3
53	2	5	5
63	2.5	8	10
78	3	12	15
91	3.5	16	20
103	4	21	24
129	5	24	-
155	6	24	-
200	8	24	-

3. ASSISTANCE

If you require technical assistance, please contact the Technical Assistance Center (TAC) using the contact information below:

North America: 1-866-388-0488
All other areas: 1-519-457-2318
E-mail: tac@trojantechnologies.com

At the time of publishing, the information within this document is current. Due to continuous improvements, we may have future changes and recommendations which will be sent via product bulletins.

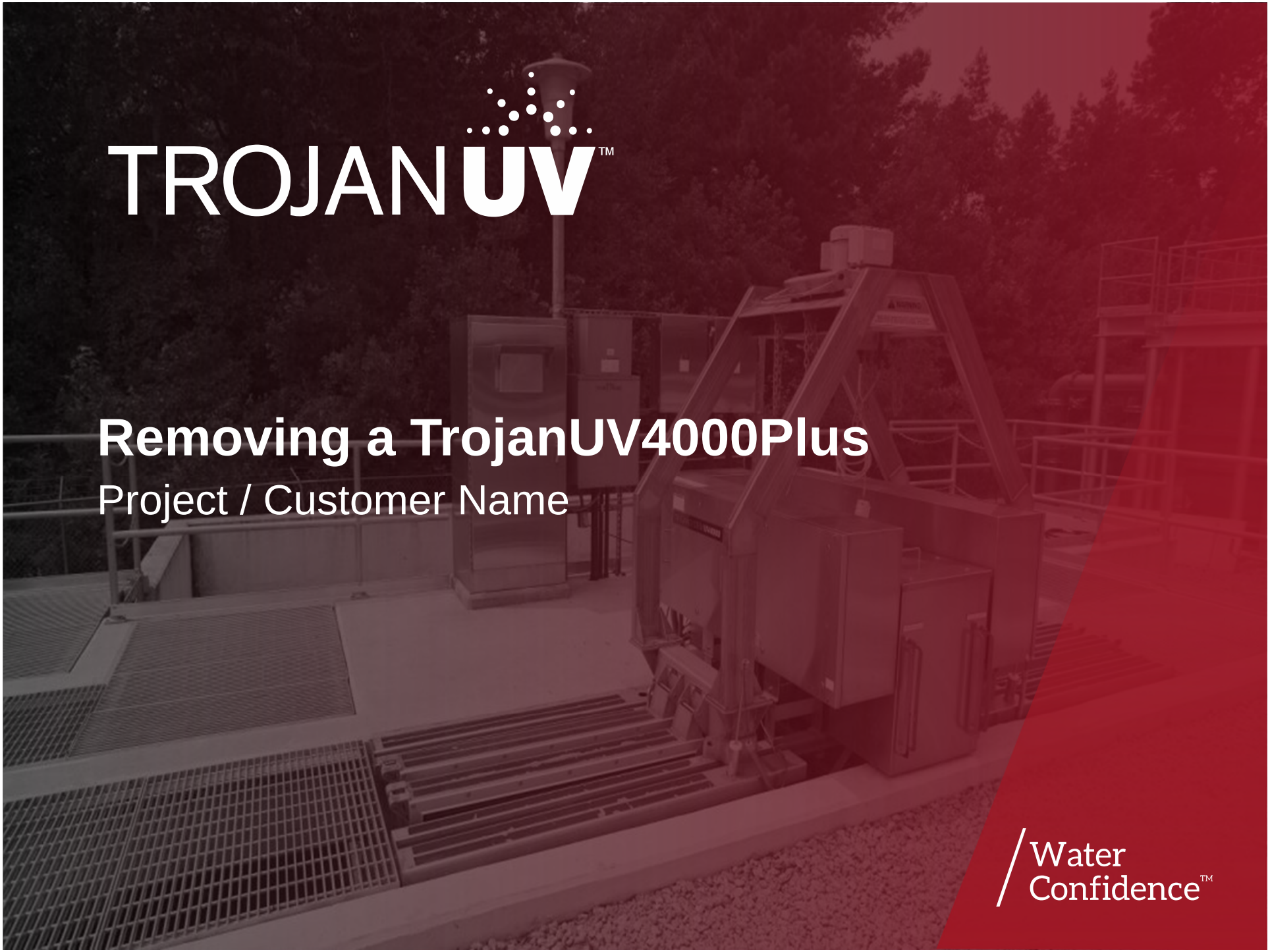
TROJANUV™
Removing a TrojanUV4000Plus
Project / Customer Name
Water Confidence™

MAKING THE UPGRADE

- Municipalities throughout the world are choosing TrojanUV systems for their disinfection upgrade and chlorine conversion projects
- Significant innovation has occurred in the 15 to 20 years since many UV systems have been placed in operation
- We have helped hundreds of municipalities replace and upgrade their UV disinfection system
- The following slides provide a quick step-by-step overview of how a TrojanUV4000Plus is removed from a channel

Then

Now

TROJANUV4000 CONFIGURATION

1. Module Removal Mechanism (MRM)
2. Hydraulic System Center (HSC)
3. Power Distribution Center (PDC)
4. Reactor Insert and Mounted Components
5. Module

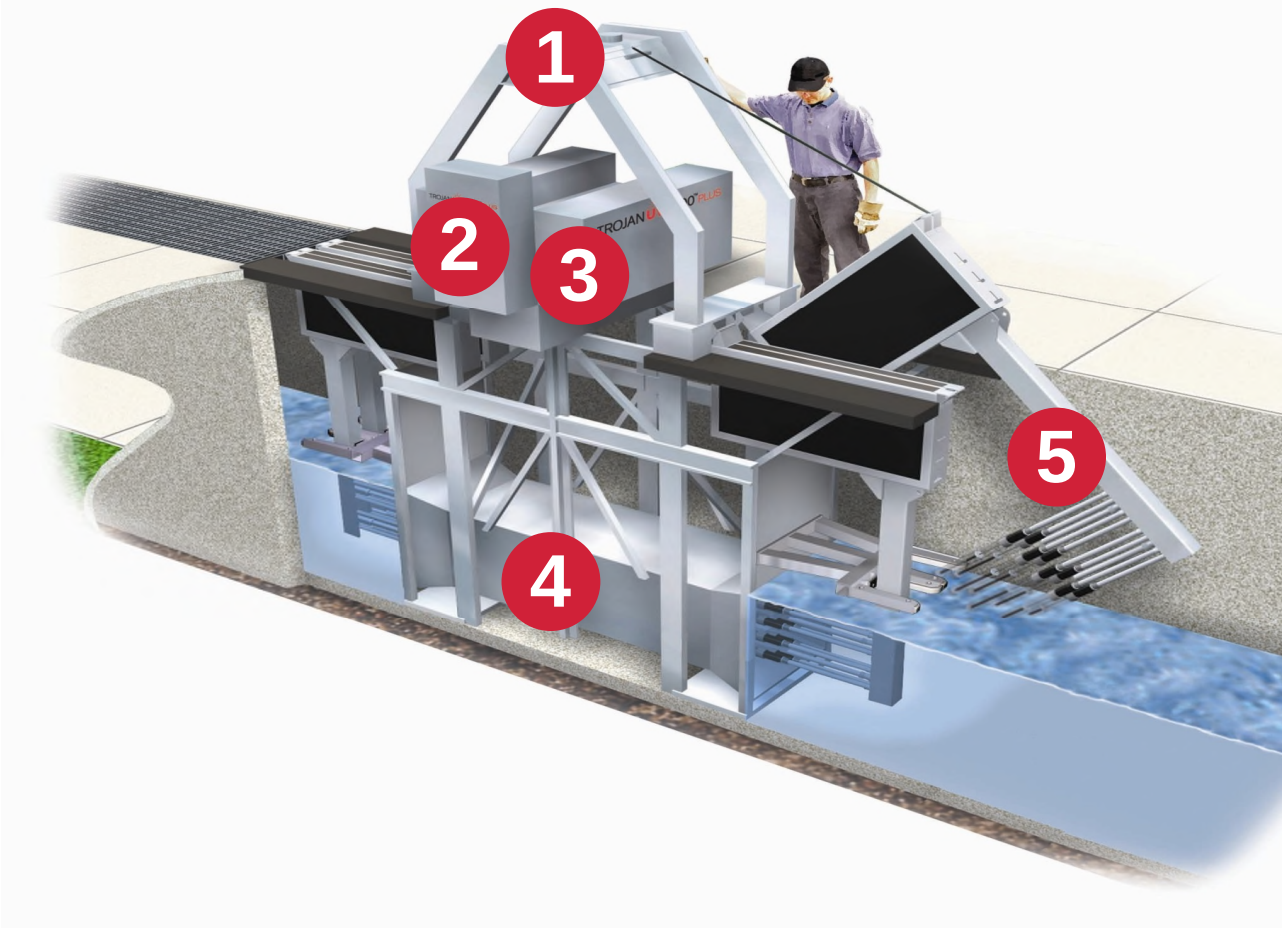

STEP #1:
REMOVE MODULES

- Lift grating
- Lift modules using MRM
- Wash down modules
- Lower grating
- Remove lamps, sleeves and ballasts
- Disconnect all cables and hoses between PDC, HSC and modules
- Support module body using forklift truck and slings
- Remove entire module by removing module hinge nuts
- Estimated 5 hours / module

STEP #2:
REMOVE FLUIDS

- Remove coolant and hydraulic fluids from HSC power pack and coolant reservoir
- Store in suitable containers for disposal
- Estimated 2-3 hours per reactor

STEP #3:
REMOVE MRM

- Remove motor assembly
- Unbolt MRM from reactor
- Lift from reactor using forklift truck or crane
- Estimated 1 hour per MRM

STEP #4:
REMOVE PDC & HSC

- Unbolt PDCs from reactor
- Lift from reactor using forklift truck and slings
- Unbolt HSC from reactor
- Lift from reactor using forklift truck and slings
- Estimated 3 hours per reactor

STEP #5:
REMOVE BEAMS

- Beams that held the modules need to be removed
- One beam spans each bank (two beams per reactor)
- Estimated 1 hour per beam

STEP #6:
REMOVE REACTOR INSERT

- This is the most challenging step in the UV system removal process
- The SS reactor insert and beams are encased in concrete

Grouted Concrete

Reactor insert & coolant reservoir

STEP #6:
REMOVE REACTOR INSERT

- The concrete will need to be chipped out to gain access to the reactor insert(s)
- Approx. volume of concrete to be removed: 15-20 yd^3
- Methods include jack-hammering, concrete and SS saw-cutting
- Ensure that coolant from insert in fully pumped out before removal
- Time to remove inserts varies based on methods used and experience

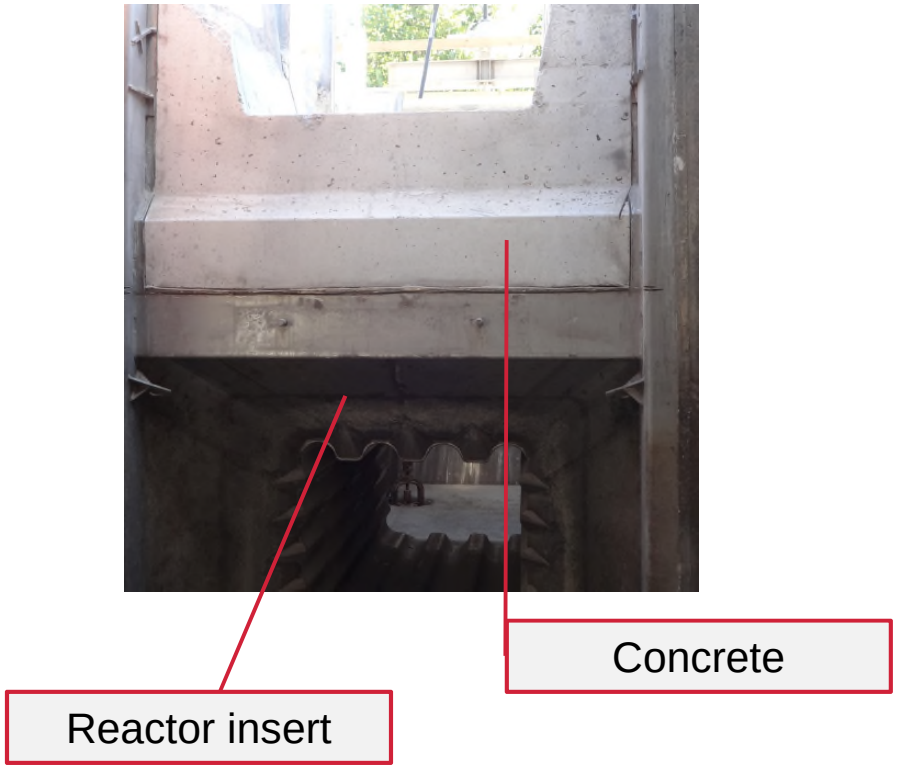

MAKING THE UPGRADE

- TrojanUVSigna reactor (shown) does not require tight tolerances on channel floor or walls
- Designed to easily fit into existing TrojanUV4000 channels

TROJAN UV SIGNA™

INSTRUMENTATION

DRAWINGS & CUT SHEETS

SECTION CONTENTS

Electrode Water Level Sensor

UV Intensity Sensor

Bank in Place Proximity Sensor

TROJAN UV

Water Confidence™

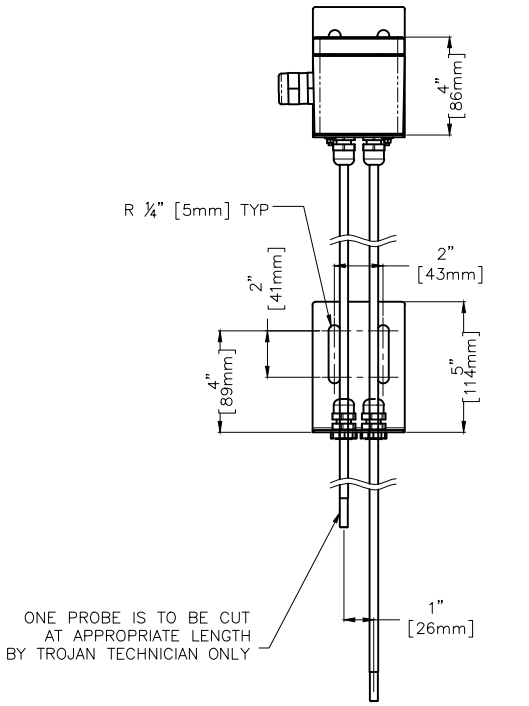

FRONT VIEW
SCALE:NOT TO SCALE

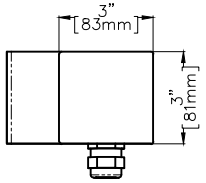

TOP VIEW
SCALE:NOT TO SCALE

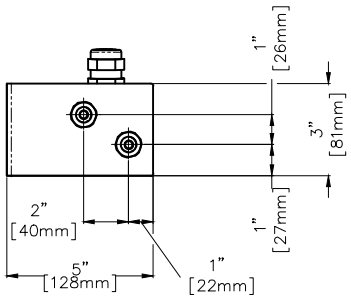

BOTTOM VIEW
SCALE:NOT TO SCALE

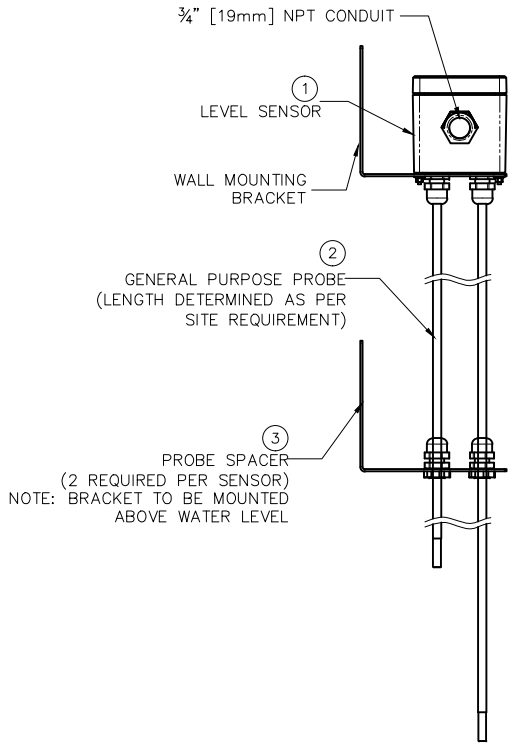

SIDE VIEW
SCALE:NOT TO SCALE

NOTES:

1. LEVEL SENSOR PROBES TO BE INSTALLED BY CERTIFIED TROJAN SERVICE TECHNICIAN. ONE PROBE IS TO BE CUT AT APPROPRIATE LENGTH (TOP OF THE TOP LAMP).

2. USE WEATHER PROOF ¾" [19mm] CONDUIT FOR THE WIRES (BY OTHERS) WITH APPROPRIATE WEATHER PROOF FITTINGS, GROMMETS, TO MAINTAIN TYPE 4X (IP56) RATING OF THE SENSOR BOX.

3. MOUNTING BOLTS ARE RECOMMENDED TO BE LOCATED ON THE CENTER OF THE SLOTS TO MAINTAIN ADJUSTABILITY.

4. SENSOR BOX TO BE EPOXY FILLED AFTER WIRES ARE ROUTED BY CERTIFIED TROJAN SERVICE TECHNICIAN.

ITEM	QTY	DESCRIPTION	PART NUMBER
3	1	SENSOR, PROBE SPACER	319016
2	2	SENSOR, PROBE WATER LEVEL	914369G
1	1	SENSOR, PROBE MOUNTING ENCL	319015

TROJANUV

CONFIDENTIALITY NOTICE
Copyright© 2013 by Trojan Technologies. All rights reserved. No part of this document may be reproduced, stored in a retrieval system, or transmitted in any form, without the written permission of Trojan Technologies.

DESCRIPTION: TROJANUVSIGNA™, RODDED LEVEL SENSOR

STANDARD DRAWING NO. SG0028

DRAWN BY : KDH	DATE : 130C07
CHECKED BY : MMB	DATE : 130C07
APPROVED BY : SAH	DATE : 130C07
SCALE (8.5x11) : NOT TO SCALE	LOG NUMBER : N/A

REFERENCE NO. 319014G

DWG NO. S01 REV. A

Series DC
For Remote Applications

Series DC controls are designed for applications where only direct current power is available. DC units can be used as differential level controls or single point alarm contactors. Because of solid state reliability, plug-in convenience, and choice of 12 or 24 VDC supply voltage, Warrick DC controls can be used with confidence in many applications.

Contact Design	SPDT 1 N.O. & 1 N.C. (1 form C), non-powered contacts
Contact Rating	5 amp @ 30 VDC or 120 VAC Resistive 1/8 hp
Mode of Operation	Direct/Inverse, factory set
Sensitivity	0 - 1M ohm maximum, factory set
Primary Voltage	12 VDC, 24 VDC, negative ground (±20%)
Supply Current	40 mA when relay energized, 10 mA w/relay de-energized
Secondary Voltage	12 VDC
Terminal Style	Screw connector
Temperature	-50°F to +150°F (-46°C to +65°C)
Options	Time Delay

Series DC

Applications

- Single and Differential Service
- Solar and Wind Powered Pumps
- Portable Cleaning Equipment
- Battery-Powered Level Control
- Well Pumps
- Remote Reservoirs
- Remote Irrigation
- Onboard Ship Level Control

How to Order

Use the **Bold** characters from the chart below to construct a product code.

DC X X X X XX XX

- Series: **DC**
- Supply Voltage: **1** – 12 VDC; **2** – 24 VDC
- Sensitivity: **B** – 22K; **C** – 100K; **D** – 470K; **E** – 1M
- Mode of Operation: **D** – Direct; **I** – Inverse
- Enclosure: **0** – None; **1** – NEMA 1; **4** – NEMA 4
- Time Delay (increasing level) **01-30** sec.
- Time Delay (decreasing level) **01-30** sec.

Dimensions

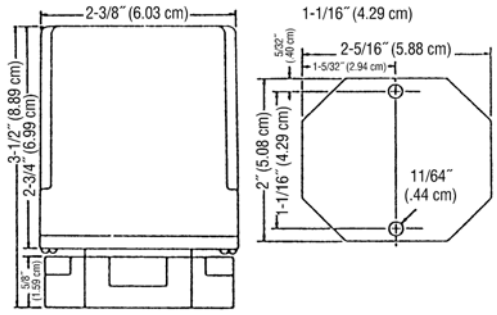

Wiring

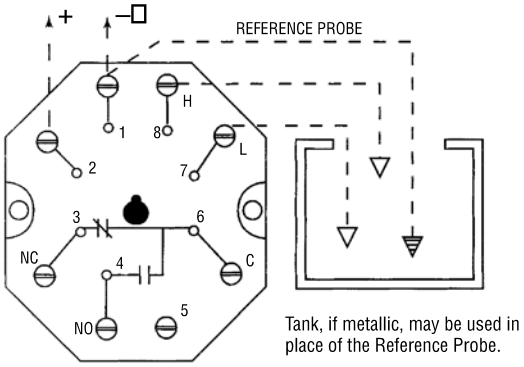

Tank, if metallic, may be used in place of the Reference Probe.

WARRICK CONDUCTIVITY SENSORS

Warrick® Sensor Fittings and Probes

Warrick Liquid Level Sensors are available in single- and multi-probe models and with a variety of fittings. The versatility of the Warrick design makes these sensors ideal for a diverse range of applications.

Examples include:

- Food and Beverage
- Caustics and Acids
- Sumps
- Reservoirs
- Pharmaceuticals
- Boilers and Steam Generators
- Ponds
- Sewage and Wastewater

Probe Styles

- Metal Rods
- Wire Suspended
- Corrosion Resistant
- Sanitary

Fitting Styles

- 3/8˝ to 3˝ Threaded Mount
- Bracket Mount
- Flange Mount
- External Mount
- Sanitary Mount
- Conduit Mount

Sensor Selection Chart

SERIES		3E	3N	3F	3G	3C	3K	3J	3L	3M	3MT	3S	3R	3T	3B	3H	3W	3Y
Page Number		E-20	E-20	E-19	E-19	E-23	E-23	E-18	E-18	E-25	E-25	E-24	E-21	E-21	E-20	E-18	E-22	E-22
Body Options	Flange			•	•													
	Pipe Thread	•			•			•										
	Flat Mount		•		•													
	Side Chamber					•	•											
	Non-Contact Electrodes											•						
	Food Grade Connection									•	•							
	Bracket Mount											•						
Fitting Body Material Options	Brass	•	•	•		•		•										
	PVC		•	•	•													
	1018 Carbon Steel			•														
	Stainless Steel	•		•														
	Forged Steel			•														
	Nylon									•	•							
	Cast Iron	•				•	•	•				•						
Housing Material	Coated Aluminum	•	•	•		•	•	•				•						
	Polycarbonate				•													
Number of Probes	1 to 3		•					•										
	1 to 4					•	•			•	•							
	1 to 7	•		•	•							•						
Electrodes	Electrode Only								•				•	•	•	•	•	•

EURONORD
PC 0808

3.2 x 3.1 **UL Type 1, 4, 4X, 12 and 13**

Including: Base with hardware screws for accessory mounting, cover with PUR gasket and ferritic stainless steel cover screws.

Enclosures

Order symbol	UL Order symbol	Dimensions inch	Dimensions mm	Description
PC 080806	UL PC 080806	3.2 x 3.1 x 2.2	82 x 80 x 55	Enclosure, PC ▪ Opaque cover
PC 080807	UL PC 080807	3.2 x 3.1 x 2.6	82 x 80 x 65	Enclosure, PC ▪ Opaque cover
PC 080809	UL PC 080809	3.2 x 3.1 x 3.3	82 x 80 x 85	Enclosure, PC ▪ Opaque cover
PC 080810	UL PC 080810	3.2 x 3.1 x 3.7	82 x 80 x 95	Enclosure, PC ▪ Opaque cover
PCT 080806	UL PCT 080806	3.2 x 3.1 x 2.2	82 x 80 x 55	Enclosure, PC ▪ Transparent cover
PCT 080807	UL PCT 080807	3.2 x 3.1 x 2.6	82 x 80 x 65	Enclosure, PC ▪ Transparent cover
PCT 080809	UL PCT 080809	3.2 x 3.1 x 3.3	82 x 80 x 85	Enclosure, PC ▪ Transparent cover
PCT 080810	UL PCT 080810	3.2 x 3.1 x 3.7	82 x 80 x 95	Enclosure, PC ▪ Transparent cover

Accessories

Order symbol	Dimensions inch	Dimensions mm	Description
TM 0808	2.2 x 2.8	56 x 71	Back Panel
TF 28037			Mounting foot kit (4 pcs) ▪ incl. screws
TH A			Gray plastic hinges (2 pcs) ▪ incl. mounting screws

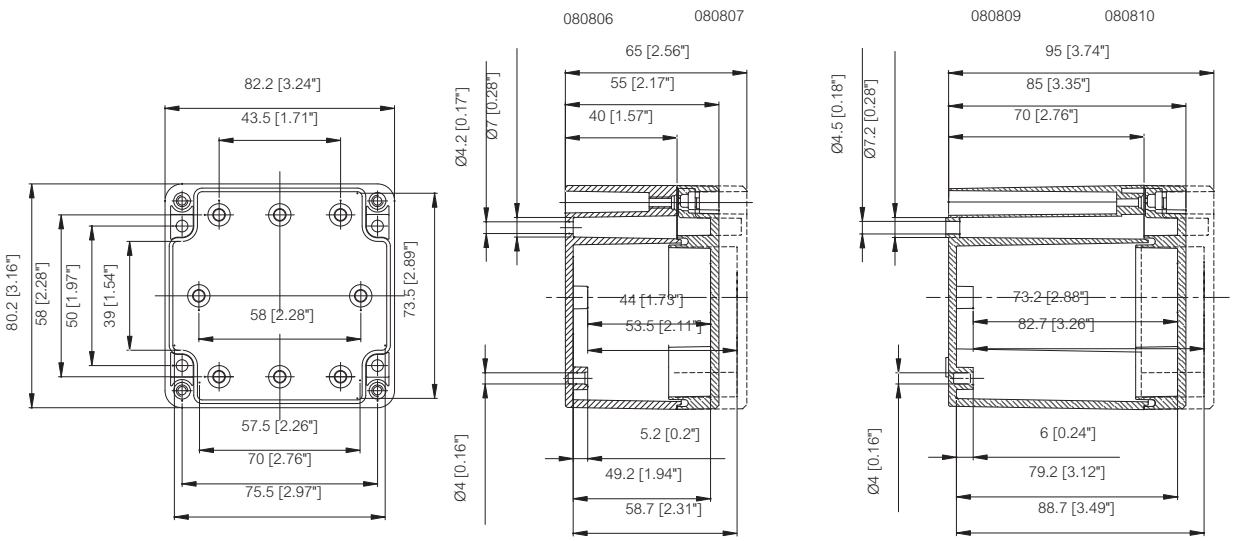

REV	SHT	ZONE	REVISION DESCRIPTION	LOG NO.	REV BY	CHK BY	APPD BY	DATE YYYY-MM-DD
A			DRAWING RELEASED	11-1152	DJ	LQ	JJS	2011-12-01

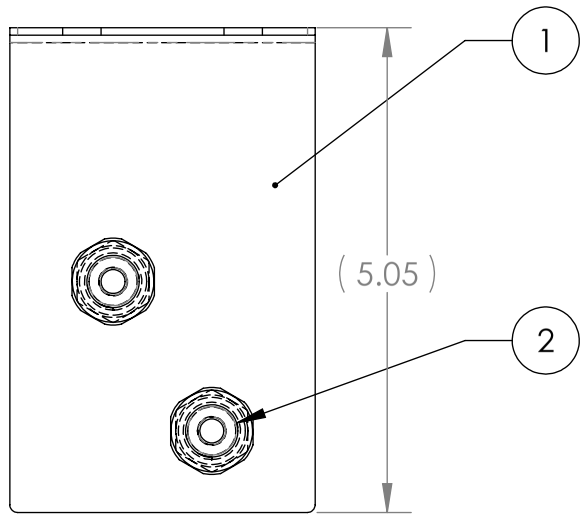

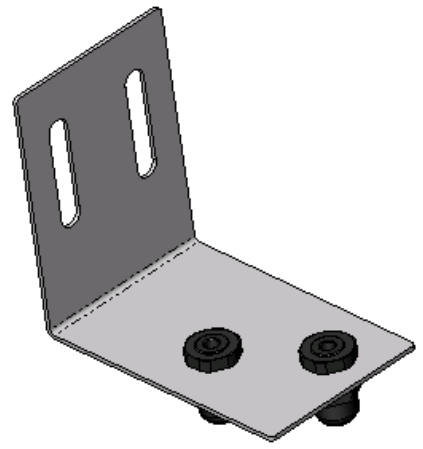

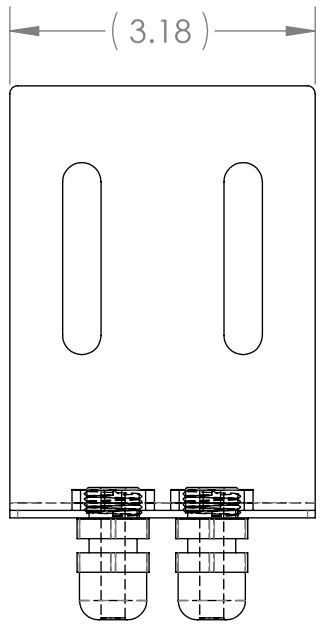

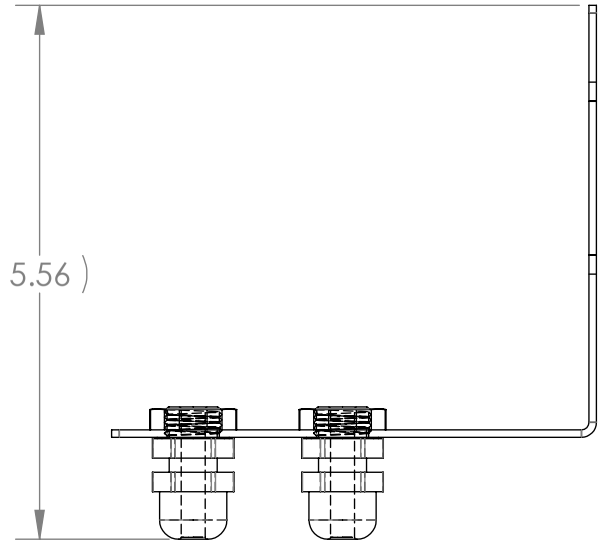

NOTE:

1/ PRIOR TO SHIPPING, SUPPLIER MUST IDENTIFY FINISHED PRODUCT PER ES0275

ITEM NO	QTY.	ITEM DESCRIPTION	PART NO.	DRAWING NO.
2	2	STAIN RELIEF, M-12 0.276 B	915889-S2507	915889G
1	1	BRACKET, UV3+ LVL SNSR	319016-01	SEE SHEET 2

UNLESS OTHERWISE SPECIFIED:
DO NOT SCALE DRAWING

INTERPRET DIMENSIONS AND TOLERANCES PER ASME Y14.5M-1994

DIMENSIONS ARE IN INCHES

TOLERANCES APPLY AS SHOWN BELOW:

2 PL DEC ± 0.01
3 PL DEC ± 0.005
ANGLE ± 1.0

REMOVE ALL BURRS, ALL CORNERS R 0.010" OR BREAK EDGE. (F) CRITICAL CHARACTERISTIC

THIRD ANGLE PROJECTION

CONFIDENTIALITY NOTICE

COPYRIGHT 2011 BY TROJAN TECHNOLOGIES. ALL RIGHTS RESERVED. NO PART OF THIS DOCUMENT MAY BE REPRODUCED, STORED IN A RETRIEVAL SYSTEM, OR TRANSMITTED IN ANY FORM, WITHOUT THE WRITTEN PERMISSION OF TROJAN TECHNOLOGIES.

SolidWorks MAINTAINED DATA CHANGES SHALL BE INCORPORATED ELECTRONICALLY

DRAWN BY	DJ
CREATED ON	2011-09-13
RELEASE LOG #	11-1152

TROJAN UV™

3020 GORE ROAD, LONDON, ONTARIO, CANADA, N5V-4T7

DESCRIPTION: BRACKET ASSY, UV3+ LVL SNSR

DWG NO.	REV	MASS	SCALE	SHEET	SIZE
319016	A	0.71 lbs	1:2	1 OF 2	B

CURRENT STATUS: Released

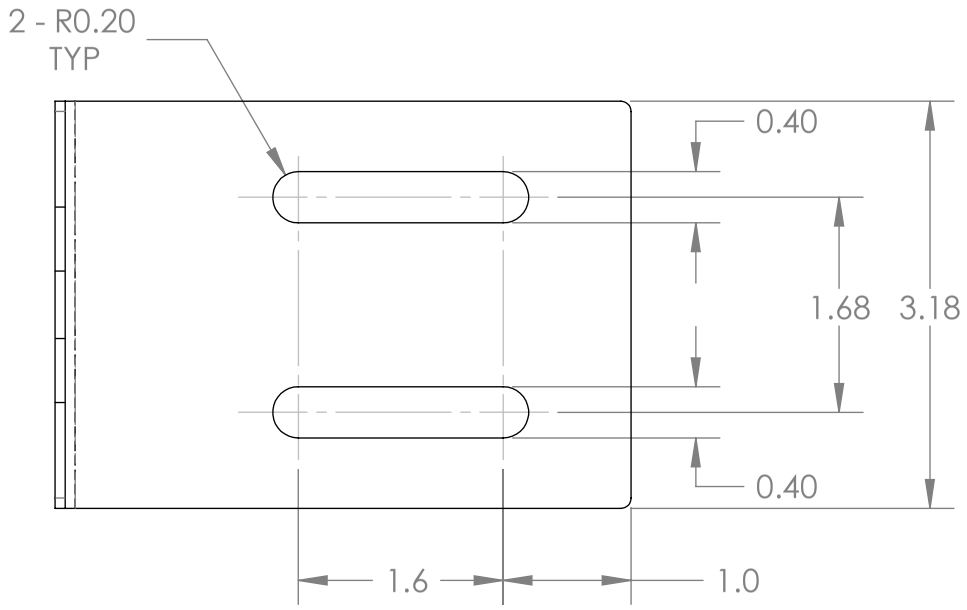

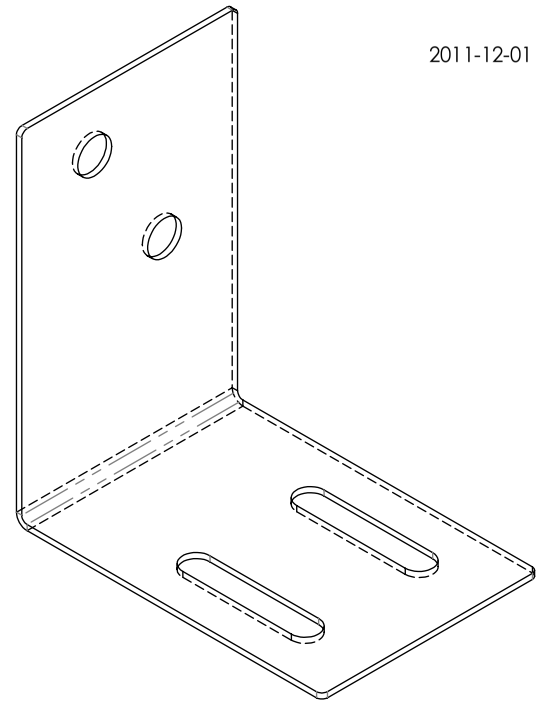

2011-12-01

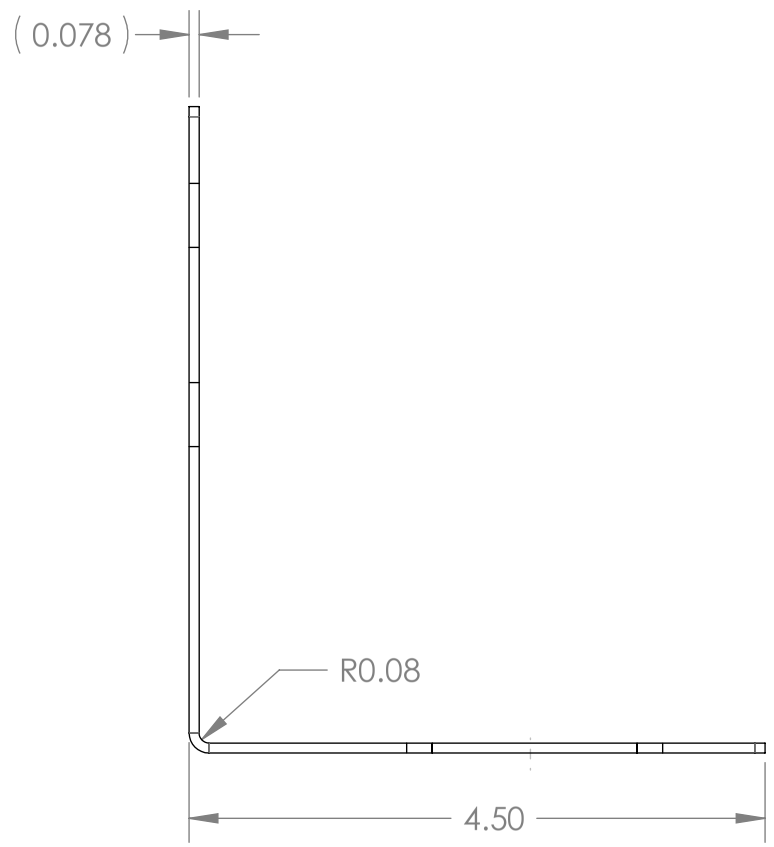

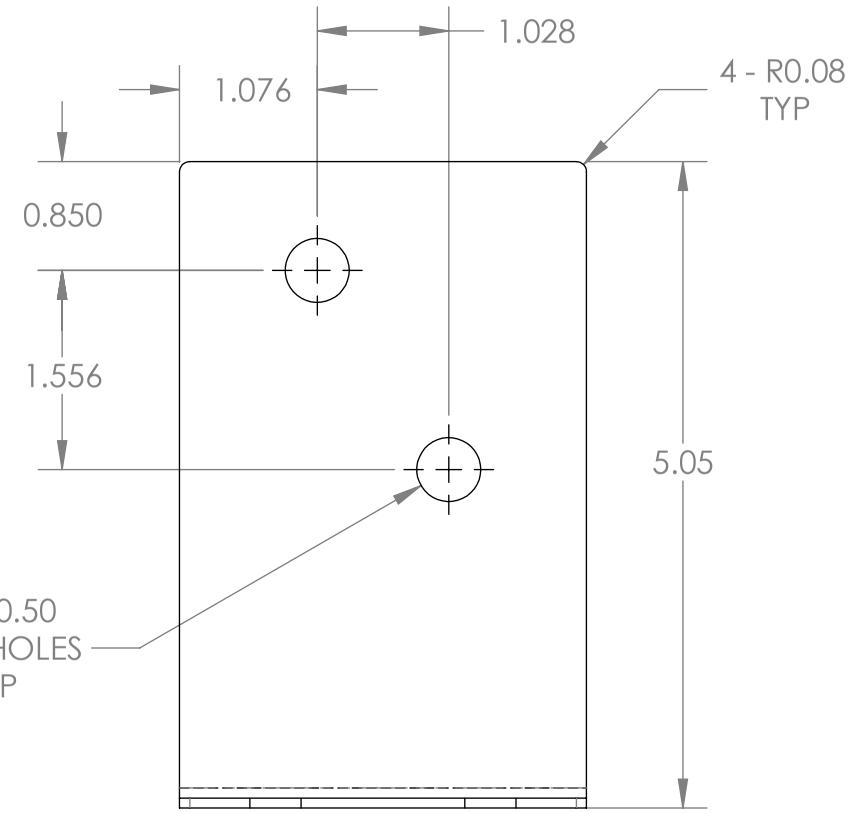

ITEM 1: 319016-01

NOTES:

1/ MATERIAL: 14 Ga. (.0781) SST304
2/ REMOVE BURRS/SHARP EDGES.

UNLESS OTHERWISE SPECIFIED: DO NOT SCALE DRAWING INTERPRET DIMENSIONS AND TOLERANCES PER ASME Y14.5M-1994 DIMENSIONS ARE IN INCHES TOLERANCES APPLY AS SHOWN BELOW: 2 PL DEC ± 0.01 3 PL DEC ± 0.005 ANGLE ± 1.0 REMOVE ALL BURRS, ALL CORNERS R 0.010" OR BREAK EDGE. CRITICAL CHARACTERISTIC THIRD ANGLE PROJECTION	**CONFIDENTIALITY NOTICE** COPYRIGHT 2011 BY TROJAN TECHNOLOGIES. ALL RIGHTS RESERVED. NO PART OF THIS DOCUMENT MAY BE REPRODUCED, STORED IN A RETRIEVAL SYSTEM, OR TRANSMITTED IN ANY FORM, WITHOUT THE WRITTEN PERMISSION OF TROJAN TECHNOLOGIES. **SolidWorks** MAINTAINED DATA CHANGES SHALL BE INCORPORATED ELECTRONICALLY DRAWN BY DJ CREATED ON 2011-09-13 RELEASE LOG # 11-1152	TROJAN UV 3020 GORE ROAD, LONDON, ONTARIO, CANADA, N5V-4T7 DESCRIPTION: BRACKET ASSY, UV3+ LVL SNSR DWG NO. 319016 REV A MASS: 0.71 lbs SCALE: 1:2 SHEET 2 OF 2 SIZE B	

CURRENT STATUS: Released

SKINTOP® SLN/ SLRN

Liquid Tight, Non-Metallic Strain Relief Cable Gland with NPT Threads

SKINTOP® SLN/ SLRN is a durable, liquid tight, easy to assemble strain relief cable gland with NPT threads that is universally suited for all types of machinery & equipment, including automation, motion control, process control and robotics.

Application Advantage:

- The heavy duty SKINTOP® design provides great pullout strength and very reliable strain relief
- Superior integrated locking mechanism includes an internal ratchet for vibration proof protection
- Multi-trapezoidal thread requires just one twist to tighten
- Generous high quality neoprene bushing provides a liquid tight and dust proof, hermetic seal

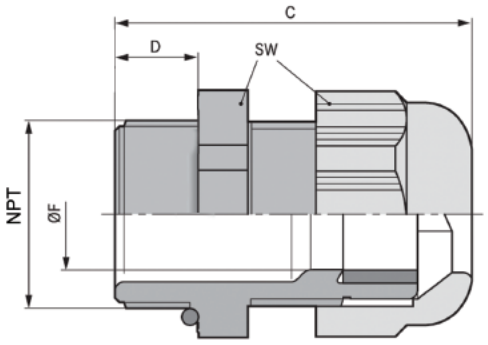

Complete the installation with:

Cable O.D. Page 486

EPIC® Connectors: Page 258

SKINTOP® DIX Page 524

Plugs Page 526

Technical Data:

Materials:
Body: Polyamide
Bushing: CR

Color:
- Black (RAL 9005) UV Resistant
- Gray (RAL 7001)

Protection:
Seal: 70 PSI, IP 68, 5 Bar (Exceeds NEMA 6/ 6P Pressure rating)

Temperature range:
Static: -40° C to +80° C
Dynamic: -20° C to +80° C

SKINTOP® SLN: Liquid Tight, Non-Metallic Strain Relief Cable Gland with NPT Threads

Part Number Black	Part Number Gray	Thread Type & Size	UL Status	Clamping Range øF inches	SW Wrenching Flats inches	C Overall Length inches	D Thread Length inches	Standard Pack Size	Weight 100 pcs. lbs.
S2138	S1138	NPT-3/8"	R	.138 - 0.315	0.748	1.693	.591	100	2.00
S2112	S1112	NPT-1/2"	L	.197 - 0.472	0.945	1.772	.591	100	2.50
S2134	S1134	NPT-3/4"	L	.512 - 0.709	1.299	2.087	.591	50	5.50
S2101	S1101	NPT-1"	L	.748 - 1.000	1.654	2.362	.591	25	9.00

SKINTOP® SLRN: Liquid Tight, Non-Metallic Strain Relief Cable Gland with Reducer Bushing

Part Number Black	Part Number Gray	Thread Type & Size	UL Status	Clamping Range øF inches	SW Wrenching Flats inches	C Overall Length inches	D Thread Length inches	Standard Pack Size	Weight 100 pcs. lbs.
S2238	S1238	NPT-3/8"	R	.079 - .236	0.748	1.693	.591	100	2.00
S2212	S1212	NPT-1/2"	L	.157 - .354	0.945	1.772	.591	100	2.50
S2234	S1234	NPT-3/4"	L	.354 - .630	1.299	2.087	.591	50	5.50
S2201	S1201	NPT-1"	L	.551 - .827	1.654	2.362	.591	25	9.00

NOTES:

1. Locknuts may be ordered separately, refer to Page 498.
2. Orders of 2000 pieces or more per item will be bulk packaged unless otherwise requested.
3. UL Status: R = Recognized; L = Listed

SKINTOP® SLM/ SLRM

Liquid Tight, Non-Metallic Strain Relief Cable Gland with Metric Threads

SKINTOP® SLM/ SLRM is a durable, liquid tight, easy to assemble strain relief cable gland with Metric threads that is universally suited for all types of machinery & equipment, including automation, motion control, process control and robotics.

Application Advantage:

- The heavy duty SKINTOP® design provides great pullout strength and very reliable strain relief
- Superior integrated locking mechanism includes an internal ratchet for vibration proof protection
- Multi-trapezoidal thread requires just one twist to tighten
- Generous high quality neoprene bushing provides a liquid tight and dust proof, hermetic seal
- Economical solution that covers a large clamping range with only 8 sizes

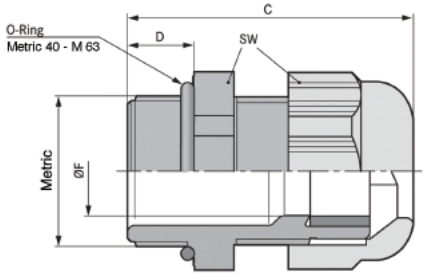

NOTES:
1. Orders of 2000 pieces or more per item will be bulk packaged unless otherwise requested.
2. UL Status: R = Recognized; L = Listed

Cable O.D. Page 486 | EPIC® Connectors: Page 258 | SKINTOP® DIX Page 524 | Plugs Page 526

Technical Data:

Materials:

Body:	Polyamide
Bushing:	CR
Locknuts:	Included

Color: - Black (RAL 9005) UV Resistant; - Gray (RAL 7001)

Protection:

Seal:	70 PSI
	IP 68, 5 Bar
	(Exceeds NEMA 6/ 6P Pressure rating)
	IP 69K

Temperature range:

Static:	-40° C to +100° C
Dynamic:	-20° C to +100° C

SKINTOP® SLM: Liquid Tight, Non-Metallic Strain Relief Cable Gland with Metric Threads

Part Number Black	Part Number Gray	Thread Type & Size	UL Status	Clamping Range øF inches	SW Wrenching Flats inches	C Overall Length inches	D Thread Length inches	Standard Pack Size	Weight 100 pcs. lbs.
S2507	S1507	M-12X1.5	R	0.138 - 0.276	0.591	1.181	.315	100	1.00
S2509	S1509	M-16X1.5	R	0.177 - 0.394	0.748	1.339	.315	100	1.50
S2513	S1513	M-20X1.5	L	0.276 - 0.512	0.984	1.457	.354	100	2.50
S2516	S1516	M-25X1.5	L	0.354 - 0.669	1.181	1.575	.394	50	3.50
S2521	S1521	M-32X1.5	L	0.433 - 0.827	1.417	1.850	.394	25	6.00
S2529	S1529	M-40X1.5	L	0.748 - 1.102	1.811	2.047	.394	10	10.50
S2536	S1536	M-50X1.5	L	1.063 - 1.378	2.165	2.441	.472	5	17.50
S2542	S1542	M-63X1.5	L	1.339 - 1.772	2.598	2.795	.472	5	25.50

SKINTOP® SLRM: Liquid Tight, Non-Metallic Strain Relief Cable Gland with Reducer Bushing

Part Number Black	Part Number Gray	Thread Type & Size	UL Status	Clamping Range øF inches	SW Wrenching Flats inches	C Overall Length inches	D Thread Length inches	Standard Pack Size	Weight 100 pcs. lbs.
S2607	S1607	M-12X1.5	R	0.039 - 0.197	0.591	1.181	.315	100	1.00
S2609	S1609	M-16X1.5	R	0.079 - 0.276	0.748	1.339	.315	100	1.50
S2613	S1613	M-20X1.5	L	0.197 - 0.394	0.984	1.457	.354	100	2.50
S2616	S1616	M-25X1.5	L	0.236 - 0.512	1.181	1.575	.394	50	3.50
S2621	S1621	M-32X1.5	L	0.276 - 0.591	1.417	1.850	.394	25	6.00
S2629	S1629	M-40X1.5	L	0.591 - 0.906	1.811	2.047	.394	10	10.50
S2636	S1636	M-50X1.5	L	0.866 - 1.142	2.165	2.441	.472	5	17.50
S2642	S1642	M-63X1.5	L	1.102 - 1.535	2.598	2.795	.472	5	25.50

Form 159
Sheet P/N 7800447
Rev. C

Warrick® Direct Current Controls Series

Installation and Operation Bulletin

This bulletin should be used by experienced personnel as a guide to the installation of Series Direct Current Controls. Selection or installation of equipment should always be accompanied by competent technical assistance. We encourage you to contact Gems Sensors or its local representative if further information is required.

Installation

1. Remove the plug-in module from the octal base. When plug-module is removed, the pin number identification can be see on the octal base.
2. Mount the octal socket (base) on a rigid vertical or horizontal surface using two #6 or #8 screws. The controls should be mounted within an enclosure of proper NEMA integrity.
3. After the base has been mounted, refer to the applicable wiring diagram. Connect the electrodes to the designated terminals of the socket using #14-#18 AWG wire for interconnecting leads. Be sure that the control is wired in accordance with the appropriate application drawing.
4. Wire the appropriate load contact in series with the "Hot" lead of the load device. **Note**: Load current rating must not exceed the maximum rating of the relay contact.
5. In accordance with the proper wiring diagram, connect the negative side (-) of the power supply to terminal #1 of the octal socket and the positive side (+) of the supply to terminal #2 of the socket. Verify that the power supply output voltage correlates to the data label on the control. **Caution: Reversal of power supply leads from designated polarity may damage the internal solid-state circuitry of the control. Verify the correct polarity of the power supply connections before proceeding to step #6.**
6. Plug the DC level control into the octal socket. Numbers at the base of the pins match the numbers on the installed base. The control is keyed for proper installation; the unit will not plug in if the pins are not properly aligned.

Warrick Controls recommends that you inspect and clean the electrode rods annually.

Dimensional Diagram

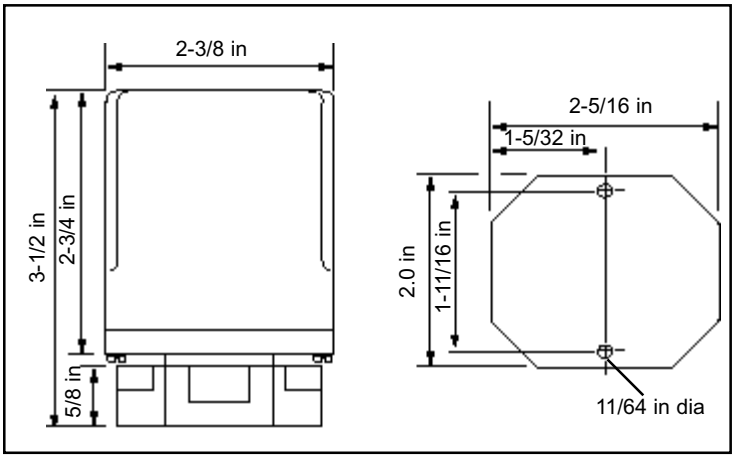

Use copper (60/70° C) wire only. Torque to 20 inch pounds.

DC XXXX XX XX

- Time Delay: (decreasing level 1-30 sec)
- Time Delay: (increasing level 1-30 sec)
- Enclosure: **0**- none, **1**- NEMA 1, **4**- NEMA 4
- Mode: **D**- direct, **I**- inverse
- Sensitivity (ohms): **B**- 22K, **C**- 100K, **D**- 470K, **E**- 1M
- Supply Voltage: **1**- 12 VDC, **2**- 24 VDC

Specifications

Contact Design:	SPDT (1 form C) 1 Normally Open (N.O.) and 1 Normally Closed (N.C.)
Contact Ratings:	5A @ 30 VDC or 120 VAC, 4A @ 240 VAC resistive, 1/8th Hp 120 VAC, 240 VAC pilot duty code C150
Contact Life:	Mechanical - 20 million operations. Electrical - 100,000 operations minimum @ rated load
Electronics Module:	Solid-state components epoxy sealed in a black polystyrene plug-in style housing
Supply Voltage	12 or 24 VDC - Negative ground, ±20%
Supply Current:	12 VDC Model - Relay de-energized 10mA, Relay energized 40mA
Sensitivity Range:	0-1M maximum specific resistance, ohm factory set
Temperature Range:	-50° to +150° F

Wiring Diagram

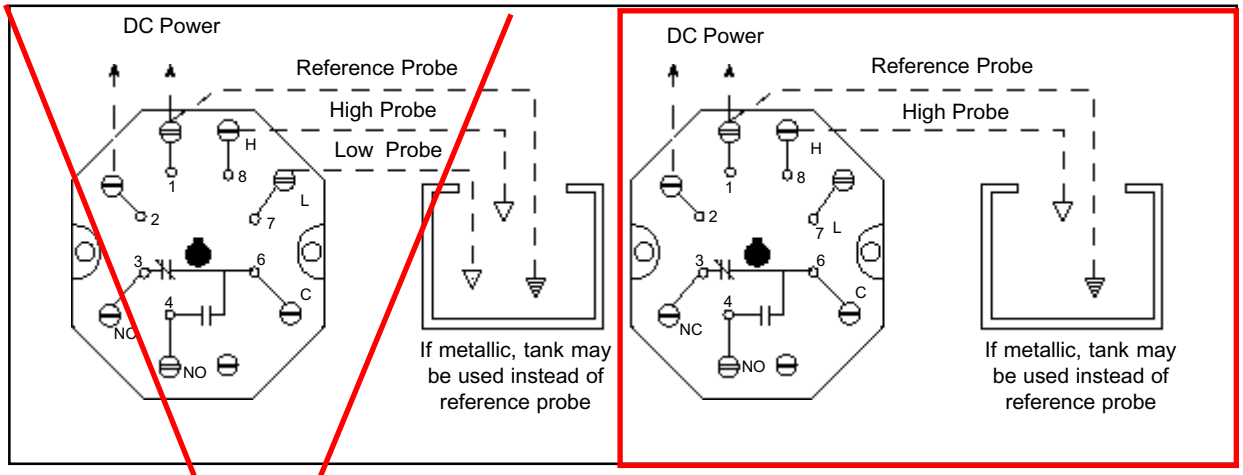

Differential Level Wiring

Connect negative side (-) of VDC supply line to terminal #1 and positive (+) side to terminal #2. **Note**: Check polarity of power connections. Connect terminal #8 (H) to the high electrode and terminal #7 (L) to the low electrode. Terminal #1 can be grounded to tank if the tank is metallic. When the tank is not metallic, terminal #1 must be connected to an additional electrode of length equal to or longer than the longest probe.

Operation

Direct Mode: The control energizes closing load contact 4-6 and opening load contact 3-6 when the level rises to the short electrode connected to terminal #8. The control remains energized until the level recedes below the long electrode connected to terminal #7.

Inverse Mode: The control de-energizes opening load contact 4-6 and closing load contact 3-6 when the level rises to the short electrode connected to terminal #8. The control remains de-energized until the level recedes below the long electrode connected to terminal #7.

Note: For single level service controls utilizing both increasing and decreasing time delays, a jumper wire is required between terminals #7 and 8.

Single Level Wiring

Connect negative side (-) of VDC supply line to terminal #1 and positive side (+) to terminal #2. **Note:** Check polarity of power connections. Connect terminal #8 (H) to the electrode. Terminal #1 can be grounded to tank if the tank is metallic. When the tank is not metallic, terminal #1 must be connected to an additional electrode of length equal to or longer than the longest probe.

Operation

Direct Mode: The control energizes closing load contact 4-6 and opening contact 3-6 when the level rises to the electrode connected to terminal #8. The control de-energizes and the contacts return to their de-energized state when the level recedes below the electrode connected to terminal #8.

Inverse Mode: The control de-energizes opening load contacts 4-6 and closing load contact 3-6 when the level rises to the electrode connected to terminal #8. The control energizes and the contacts return to the energized state when the level recedes below the electrode connected to terminal #8.

Gems Sensors Inc.
One Cowles Road
Plainville, CT 06062-1198
Tel: 860-793-4579
Fax: 860-793-4580

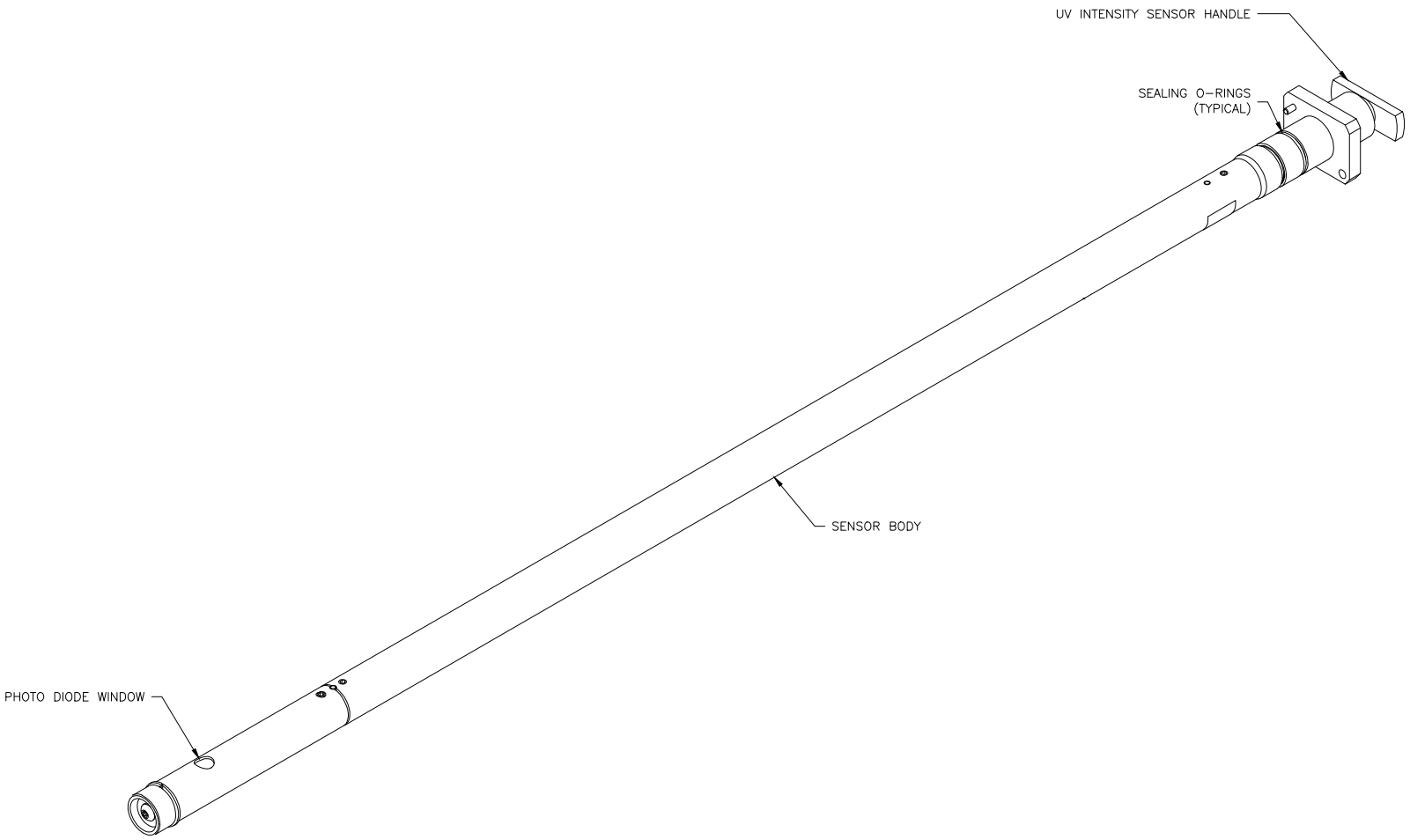

TROJANUV

CONFIDENTIALITY NOTICE
Copyright@ 2013 by Trojan Technologies. All rights reserved. No part of this document may be reproduced, stored in a retrieval system, or transmitted in any form, without the written permission of Trojan Technologies.

DESCRIPTION:
TROJANUVSIGNA, UV INTENSITY SENSOR ASSEMBLY

DRAWN BY : KDH	DATE : 13OC16
CHECKED BY : SAH	DATE : 13OC16
APPROVED BY : RLM	DATE : 13OC16
SCALE (8.5x11) : NOT TO SCALE	LOG NUMBER : N/A

STD. DRAWING NO. SG0032
REFERENCE NO. 015461G
DWG NO. D01 REV. A

Non-contact safety sensor
Eden

Eden is a non-contact safety sensor used as interlocking device for e.g. doors and safe position monitoring.

Eden consists of two parts: Adam and Eva. Adam senses the presence of Eva without mechanical contact and therefore without any wear. The compact size of Eden and its 360° mounting possibility make it easy to use in most applications.

Different models of Eden are available for different types of control modules. All Eden models make it very easy to reach PL e, often using fewer components than other solutions.

All Eden models have an IP67/IP69K sealing.

Continuous operation

Easier troubleshooting
Extensive LED indication and status information reduce downtime.

Suitable in harsh environments
IP67/IP69K and a temperature range of -40 to +70°C offer an excellent resistance in demanding environments.

No wear, no mechanical breakage
Non-contact sensing means no mechanical wear and no actuator that must fit in a specific opening. Moreover, the large sensing tolerance means better tolerance to vibrations and fewer unwanted process stops.

Affordable range

Local reset function
The integrated reset function reduces the number of cables and PLC inputs.

PL e with fewer components
Series connection with PL e, local reset and DYNlink signal allow to considerably reduce the number of components needed to reach PL e.

Easy to install

Large mounting tolerance
A 360° mounting possibility with generous tolerances facilitates mounting.

Fast connection
M12 connectors, local reset and accessories speed up installation.

Applications
Eden

Applications

Doors and hatches

Eden monitors whether the hatch is open or closed. The dangerous movement is stopped as soon as the hatch is opened.

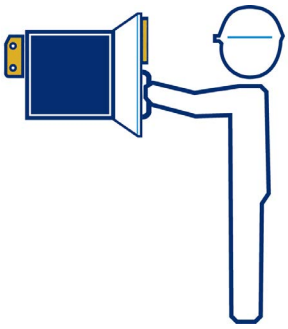

Position control

Eden can be used to monitor the position of a machine when someone is in the work area. This can be useful when removing power to the machine causes problems like a long restart time.

As long as the machine remains in the safe position monitored by Eden, a person can be allowed to enter the hazardous area even though the machine is still powered. If the machine leaves the safe position while the person is still in the hazardous area, power is removed from the machine.

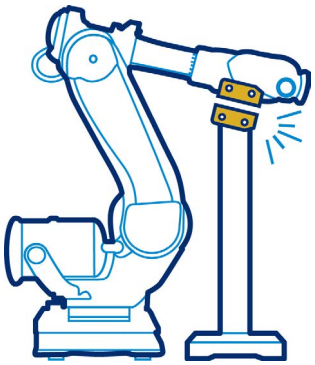

Features
Eden

Features

Easy PL e with Eden safety sensor

- Eden sensors can be connected in series while maintaining Cat. 4.
- Only one Eden per guard is necessary to reach PL e (instead of two key switches).
- Eden reaches PL e without any need for periodic checks (see ISO/TR 24119).

Low or high level coded sensor

Eva is available with General code or Unique code. If a new Adam is paired with an Eva general code at start up, Adam will accept all Eva with general code as a valid actuator. Eden will then classify as a low level coded sensor.
If a new Adam is paired with an Eva Unique code at startup (or Eva AS-i), Adam will only accept this specific Eva as a valid actuator. In this case Eden is classified as a high level coded sensor. A high level coded sensor should be used when the motivation to defeat a sensor cannot be eliminated (see EN ISO 14119:2013).

360° mounting possibility

Eden offers 360° mounting possibility with generous tolerances.

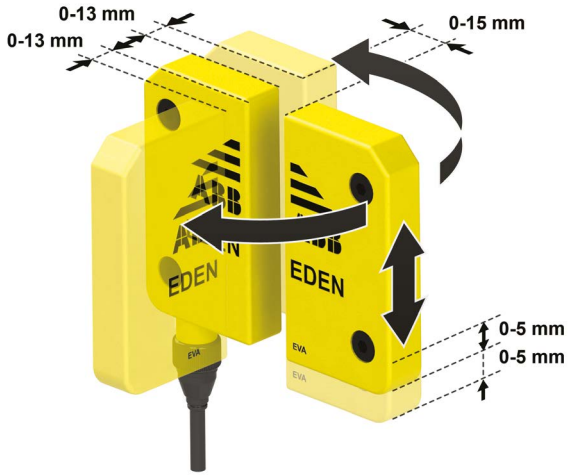

Local reset button

A local reset button with integrated LED can be connected directly to Adam Reset instead of to the safety control module. In this way, each Eden can easily have its own reset button, which saves cable length and safety relays/PLC inputs. Adam Reset monitors the reset function and manages the LED in the reset button in the following way:

on - Adam and Eva are not in contact
flashing - Adam and Eva in contact, waiting for reset
off - Adam and Eva in contact and reset

Info signal and extensive indication facilitate trouble-shooting

All Eden models offer extensive LED indication to help trouble-shooting and localizing which doors/hatches are opened. The LED on Adam lights in green or red depending on status:

green - valid Eva within range
red - valid Eva out of range
flashing red/green - valid Eva within range, but no valid safety signal received (loop broken “upstream”)

The LED on Adam AS-i has slightly different default settings and can be programmed to light in any behaviour.

Simple status information with StatusBus

StatusBus is a simple and cost effective way to collect the status information of safety sensors. The StatusBus functionality is available with some DYNlink devices and allows to collect the status of each individual safety device, even when connected in series. A single input on Pluto safety PLC can collect the status of up to 30 safety devices. The devices are connected using standard cable and M12-5 connectors. No specific bus cable or extra communication module is necessary.

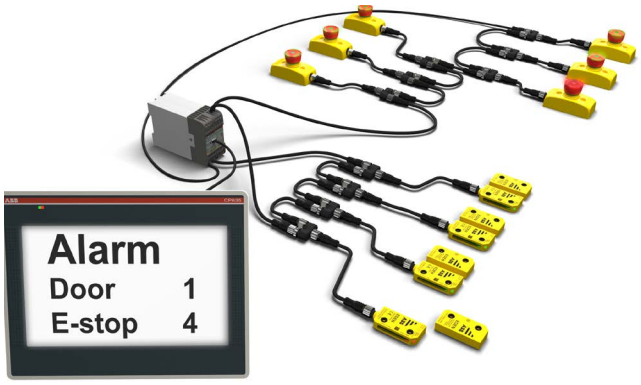

Models
Eden

Models

Eden DYN

Eden DYN consists of an Adam DYN and an Eva (general or unique code).
Adam DYN uses the ABB Jokab Safety DYNlink signal that allows to connect several safety products in series while maintaining PL e using only one channel. DYNlink signals must be used with Vital safety controller or Pluto safety PLC.
Up to 30 Adam DYN can be connected in series to Vital and up to 10 Adam DYN can be connected in series to one input of Pluto.
All products using the DYNlink signal can easily be connected in series and mixed in the same loop with a maintained PL e.
Tina adapters allow to use other products in a DYNlink loop, and a wide range of connection accessories simplifies the cabling.

Eden DYN

Eden OSSD

Eden OSSD consists of an Adam OSSD and an Eva (general or unique code).
Adam OSSD can be used with all safety relays and safety PLCs compatible with OSSD signals (commonly used for light guards). Up to 30 Adam OSSD can be connected in series, and since OSSD devices monitor their own outputs for short circuits, a Cat. 4/PL e can still be reached.

Eden OSSD

Eden AS-i

Eden AS-i consists of an Adam AS-i and an Eva AS-i (Eva AS-i has a unique code).
Eden AS-i can be used with any AS-i monitor. AS-i is a bus system that offers a very simple connection of up to 31 safety devices to one monitor according to PL e and makes it easy to move, remove and add safety devices.
When Eden AS-i is used with Pluto programmable safety controller, no other AS-i master or monitor is necessary, and no specific knowledge of AS-i is required.

Eden AS-i

Ordering information

Eden

2TLC010045V0201

Adam DYN-Info M12-5

Adam

Type of safety controller	StatusBus	Info signal	Local reset	Series connection	Connector male	Type	Order code
Pluto	x	x [1]		x	M12-5	Adam DYN-Status M12-5	2TLA020051R5200
Pluto or Vital		x		x	M12-5	Adam DYN-Info M12-5	2TLA020051R5100
			x	x	M12-5	Adam DYN-Reset M12-5	2TLA020051R5300
OSSD compatible (incl. Pluto and Sentry)		x			M12-5	Adam OSSD-Info M12-5	2TLA020051R5400
		x		x	M12-8	Adam OSSD-Info M12-8	2TLA020051R5700
			x		M12-5	Adam OSSD-Reset M12-5	2TLA020051R5600
		x	x	x	M12-8	Adam OSSD-Reset M12-8	2TLA020051R5900
AS-i safety monitor (incl. Pluto AS-i and B42 AS-i)	N/A [2]	N/A [2]		N/A [2]	M12-4	Adam AS-i	2TLA020051R6000

1) Pin 5 can be used as a standard info signal or StatusBus.
2) AS-i offers the same advantages using another technology.

2TLC010061V0201

Eva General code

Eva

Compatible Adam	Code description	Code level	Type	Order code
Adam DYN and OSSD	General code. (Eva is interchangeable)	Low level	Eva General code	2TLA020046R0800
	Unique code. (Prevents defeat/fraud)	High level	Eva Unique code	2TLA020046R0900
Adam AS-i	Unique code. (Prevents defeat/fraud)	High level	Eva AS-i	2TLA020051R8000

2TLC010040F0201

JSM D20 Eden slide lock

2TLC010040F0201

FIXA

Accessories

Description	Type	Order code
Mounting plate for conventional door/hatch and folding door. Two pieces are needed for a complete set.	JSM D4H	2TLA040033R3600
Mounting plate for folding doors. Used together with one piece of JSM D4H.	JSM D4J	2TLA042020R4000
Sliding lock for Eden on conventional doors. (Eden is not included.)	JSM D20	2TLA020302R1000
Mounting converting plate from Eden E to Eden OSSD or Eden DYN	DA 3A	2TLA020053R0600
Heat shrinking tubes for M12 connectors. Protects M12 connectors in harsh environments and provides extra protection against tampering.	M12 Safety seal	2TLA020053R0800
Safety screwdriver bit	SBIT Safety bit	2TLA020053R5000
Wrench for tightening of M12 connectors according to specified torque: 0.6 Nm.	M12 Torque wrench	2TLA020053R0900
Safety screw to eliminate the risk of manipulation/tampering. 1pc M4 x2 0mm. Length adapted to Eden.	Safety screw SM4 x 20	2TLA020053R4200
Handheld terminal for addressing, configuration and testing of AS-i devices, StatusBus devices, DYNlink devices and conventional PNP devices.	FIXA	2TLA020072R2000

Spare parts (included with main product on delivery)

Description	Type	Order code
Distance plate in yellow PBT (4 pcs).	DA 1B	2TLA020053R0700
Black distance rings to be mounted in Adam and Eva mounting holes (4 pcs).	DA 2B	2TLA020053R0300

2TLC172727F0201

Distance plate

2TLC172257F0201

Smile 12RG Reset button

Reset buttons for local reset

Description	Type	Order code
Reset button for Adam with 5 pins	Smile 12RF	2TLA030053R2600
Reset button for Adam with 8 pins	Smile 12RG	2TLA030053R2700

Technical data
Eden

Technical data

	Eden DYN	Eden OSSD	Eden AS-i
Approvals			
Conformity	CE 2006/42/EC - Machinery 2014/30/EU - EMC 2011/65/EU - RoHS		
	EN ISO 12100:2010, EN ISO 13849-1:2008/AC:2009, EN 62061:2005/A1:2013, EN 60204-:2006+A1:2009, EN 60664-1:2007, EN 61000-6-2:2005, EN 61000-6-4:2007, EN 60947-5- 3:2013, EN ISO 14119:2013, EN 61508:2010	EN ISO 12100:2010, EN ISO 13849-1:2015, EN 62061:2005/A2:2015, EN 60204-1:2006+A1:2009, EN 60664-1:2007, EN 61000-6-2:2005, EN 61000-6-4:2007, EN 60947-5-3:2013, EN ISO 14119:2013, EN 61508:2010	EN ISO 12100:2010, EN ISO 13849-1:2008, EN 62061:2005, EN 60204-1:2006+A1:2009, EN 60664-1:2007, EN 61000-6-4:2007
Functional safety data			
EN/IEC 61508:2010	SIL3, PFH_D = 4.5 x 10^{-9}	SIL3, PFH_D = 4.5 x 10^{-9}	SIL3, PFH_D = 6.0 x 10^{-9}
EN/IEC 62061:2005+A1:2013	SILCL3, PFH_D = 4.5 x 10^{-9}	SILCL3, PFH_D = 4.5 x 10^{-9}	SILCL3, PFH_D = 6.0 x 10^{-9}
EN ISO 13849-1:2008	PL e, Cat. 4, PFH_D = 4.5 x 10^{-9}	PL e, Cat. 4, PFH_D = 4.5 x 10^{-9}	PL e, Cat. 4, PFH_D = 6.0 x 10^{-9}
Electrical data	+24 VDC Tolerance: +14.4...+27.6 VDC	+24 VDC Tolerance: +14.4...+27.6 VDC	+30 VDC (AS-i bus) Tolerance: +26.5...+31.6 VDC
Mechanical data			
Operating temperature	-40°C...+70°C (storage/operation)	-40°C...+70°C (storage/operation)	-40°C...+85°C (storage), -25°C...+55°C (operation)
Protection class	IP67 and IP69K		
Humidity range	35 to 85% (no icing, no condensation)		
Material			
Housing	Polybutylene terephthalate (PBT)		
Moulding	Epoxy		
Weight	Eva: 70 g, Adam: 80 g		
Assured release distance (S_{ar})	25 mm	25 mm	45 mm
Assured operating distance (S_{ao})	10 mm	10 mm	7.5 mm
Rated operating distance (S_n)	15 ± 2mm		
Recommended distance between Adam and Eva	7 mm		
Min distance between two Eden	100 mm		

More information

Fore more information, e.g. the complete technical information, see product manual for:
Eden DYN 2TLC172271M0201
Eden OSSD 2TLC172272M0201
Eden AS-i 2TLC172230M0201

MECHANICAL

DRAWINGS & CUT SHEETS

SECTION CONTENTS

Operator's Kit
Hose Kit
Warning Sign UV Light
Lamp Specification
Lamp Driver Specification
Solo™ Lamp Sleeve, SG0031D01 - Rev B
Cable Management - Spiral Wrap

Operator's Kit

An Operator's Kit is provided with each TrojanUVSigna™. The following items are included in the kit:

1. One (1) clear UV face shield.
2. Four (4) pairs of disposable vinyl gloves.
3. One 6 inch (150 mm) galvanized steel funnel for adding hydraulic oil to the Hydraulic System Center (HSC).
4. One (1) 10 micron absolute fiberglass weave filter element for each Hydraulic System Center.
5. One (1) tube of Food Grade Grease (CC-Lube).
6. One (1) tool to service wiper cannisters. Provided to aid in removal of end cap and scroll cage.
7. One (1) heavy duty grease gun features 14 oz. cartridge, suction loader fitting and a bleeder valve to eliminate air pockets, also includes 18" flexible hose and coupler.
8. Four (4) straight unions for bleeding hydraulic lines.
9. Four (4) hex caps for hoses.
10. One (1) Solo™ Lamp Plug tool.
11. One (1) 2cm Signa Sensor Gauge

3M™ Polycarbonate Faceshields

Technical Data Sheet

Main Features

3M™ Polycarbonate Faceshields are designed to be used with all 3M™ Headgear Systems to provide face protection.

The key features include:

- Polycarbonate construction for impact and splash protection
- Easy-Change faceshields mount quickly to 3M Headgear Systems
- Easy-Change feature allows for quick faceshield replacement
- Only compatible with 3M Headgear Systems

Standards

Meets the requirements of the following standards:

- ANSI Z87.1-2003 “High Impact” requirements
- CSA Z94.3-07
- EN166-2001: Protection against liquids (droplets or splashes), Protection against high speed particles (Medium Energy Impact)

Materials

- Faceshield: Polycarbonate

Applications

3M Polycarbonate Faceshields are designed to be used only with 3M Headgear Systems. Polycarbonate faceshields should be used when the wearer is likely to come in contact with either liquid splash or flying particulates provided use is consistent with all instructions and product warnings.

ALL HEADGEAR/FACESHIELD COMBINATIONS MUST BE WORN WITH SAFETY SPECTACLES AND/OR SAFETY GOGGLES.

Typical applications include:

- Chipping, grinding, machining
- Woodworking
- Mechanical work
- Chemical work
- Metal processing
- Masonry
- High pressure washing
- Gas brazing, welding and cutting

In all cases a risk/hazard assessment should be carried out and use limitations considered to ascertain the protection required.

WARNING!

Not for use in:

- Environments that require faceshields above a Shade 5.0

Product must never be altered or modified. The appropriate 3M Headgear System must be used, based on a hazard assessment.

Maintenance, Storage and Disposal

This product should be stored in the packaging provided in dry, clean conditions.

3M™ Polycarbonate Faceshields

Physical Data for 3M™ Polycarbonate Faceshields

Prod# SI#	Description	Product Specifications			Nominal Transmittance		Nominal Ultraviolet Transmittance	
		Height	Width	Thickness	Visible	Infrared	Near UV	Far UV
82579-00000 70-0715-2202-6	WP96R Clear Polycarbonate	22.8cm	36.8cm	1.0mm	88.9%	86.3%	0.7%	0.0%
82582-00000 70-0715-2205-9	WP96X Clear Polycarbonate	22.8cm	46.4cm	1.0mm	88.9%	86.3%	0.7%	0.0%
82583-00000 70-0715-2206-7	WP96XB Medium Green Polycarbonate	22.8cm	46.4cm	1.0mm	26.5%	63.0%	0.1%	0.0%
82584-00000 70-0715-2207-5	WP96XC Dark Green Polycarbonate	22.8cm	46.4cm	1.0mm	14.4%	53.8%	0.1%	0.0%
82585-00000 70-0715-1345-4	WP96XAL Clear Aluminized Polycarbonate	22.8cm	46.4cm	1.0mm	5.4%	3.7%	0.0%	0.0%
82586-00000 70-0715-2208-3	WP96XBAL Med. Green Aluminized Polycarbonate	22.8cm	46.4cm	1.0mm	2.3%	3.2%	0.0%	0.0%
82587-00000 70-0715-1346-2	WP96XCAL Dark Green Aluminized Polycarbonate	22.8cm	46.4cm	1.0mm	1.4%	5.4%	0.0%	0.0%
82543-00000 70-0715-2200-0	~~WP96 Clear Polycarbonate for HGP3 Chin Protector~~	~~17.8cm~~	~~36.8cm~~	~~1.0mm~~	~~88.9%~~	~~86.3%~~	~~0.7%~~	~~0.0%~~
82701-00000 70-0715-2218-2	WP96 Clear Polycarbonate	22.8cm	36.8cm	2.0mm	87.6%	85.4%	0.1%	0.0%
82704-00000 70-0715-2220-8	~~WP96AF Clear Polycarbonate Anti-Fog~~	~~22.8cm~~	~~36.8cm~~	~~2.0mm~~	~~88.0%~~	~~85.4%~~	~~0.1%~~	~~0.0%~~
82525-00000 70-0715-2196-0	WP96B Medium Green Polycarbonate	22.8cm	36.8cm	2.0mm	25.8%	54.7%	0.0%	0.0%
82702-00000 70-0715-2219-0	WP96C Dark Green Polycarbonate	22.8cm	36.8cm	2.0mm	14.6%	58.9%	5.2%	0.0%
82504-00000 70-0715-1341-3	WP96AL Clear Aluminized Polycarbonate	22.8cm	36.8cm	2.0mm	10.6%	6.8%	0.0%	0.0%
82518-00000 70-0715-1344-7	WP96BAL Med. Green Aluminized Polycarbonate	22.8cm	36.8cm	2.0mm	1.2%	3.5%	0.0%	0.0%
82509-00000 70-0715-1343-9	WP96CAL Dark Green Aluminized Polycarbonate	22.8cm	36.8cm	2.0mm	0.6%	2.2%	0.3%	0.0%
82705-10000 70-0715-2221-6	W96IR3 Shade 3.0 Polycarbonate	22.8cm	36.8cm	2.0mm	10.8%	5.2%	0.0%	0.0%
82706-10000 70-0715-2222-4	W96IR5 Shade 5.0 Polycarbonate	22.8cm	36.8cm	2.0mm	1.8%	0.5%	0.0%	0.0%
82600-00000 70-0715-2212-5	WCP96 Clear Polycarbonate with Anti-Fog and Hard Coat	22.8cm	36.8cm	2.0mm	91.7%	84.8”	0.0%	0.0%
82601-00000 70-0715-2213-3	WCP96B Med. Green Polycarbonate with Anti-Fog and Hard Coat	22.8cm	36.8cm	2.0mm	26.0%	64.5%	0.0%	0.0%
82602-00000 70-0715-2214-1	WCP96G Clear, Gold Plated Polycarbonate with Anti-Fog and Hard Coat	22.8cm	36.8cm	2.0mm	18.0%	3.1%	0.0%	0.0%
82603-00000 70-0715-2215-8	WCP96BG Med. Green, Gold Plated Polycarbonate with Anti-Fog and Hard Coat	22.8cm	36.8cm	2.0mm	4.0%	2.1%	0.0%	0.0%
82604-00000 70-0715-2216-6	WCP96CG Dark Green, Gold Plated Polycarbonate with Anti-Fog and Hard Coat	22.8cm	36.8cm	2.0mm	1.1%	0.8%	0.0%	0.0%

Approximate Operating Temperature Range for Polycarbonate Faceshields: -40°C to 130°C

Approximate temperature range refers to the actual temperature of the faceshield. Actual operating temperatures will vary widely based upon exposure to heat and other work environment conditions.

3M
Occupational Health &
Environmental Safety Division
3M Center – Building 235-2W-70
St. Paul, MN 55144-1000
Sales Assistance: 1-800-328-1667
Technical Assistance: 1-800-243-4630
www.3M.com/OccSafety

⚠ WARNING

These head and face protection products help provide limited protection against certain flying particles. **Misuse or failure to follow warnings and instructions may result in serious personal injury, including blindness or death.** For proper use, see supervisor, read instructions and warnings on the package or call 3M OH&ESD Technical Service at 1-800-243-4630.

© 3M 2009. All rights reserved.

Hose Kit

Refer to the Operations and Maintenance User's Manual Instruction and TrojanUV Hose Assembly Field Connection for installation information. These can both be found in the Product Information section of this manual.

Part	Trojan Part Number	Qty
ELBOW, 90D 06JICMX08ORBM 316	907566-06-08-316	4
ELBOW, 90D 06JICMX06ORBM 316	907566-06-06-316	4
HOSE, 100R17 06 STR JICF	907680-06BB	4
TUBING, HEAT SHRINK 1" YLW	901932-012YLW	6
TUBING, HEAT SHRINK 1" RED	901932-012RED	6
TUBING, HEAT SHRINK 1" BLU	901932-012BLU	6
TUBING, HEAT SHRINK 1" GRN	901932-012GRN	6

Warning Sign - UV Light

Custom made CAUTION label indicating UV LIGHT hazard which requires wearing proper eye & skin protection as mandatory actions.

Metal sign applicable for all weather outdoor hanging/posting at site.

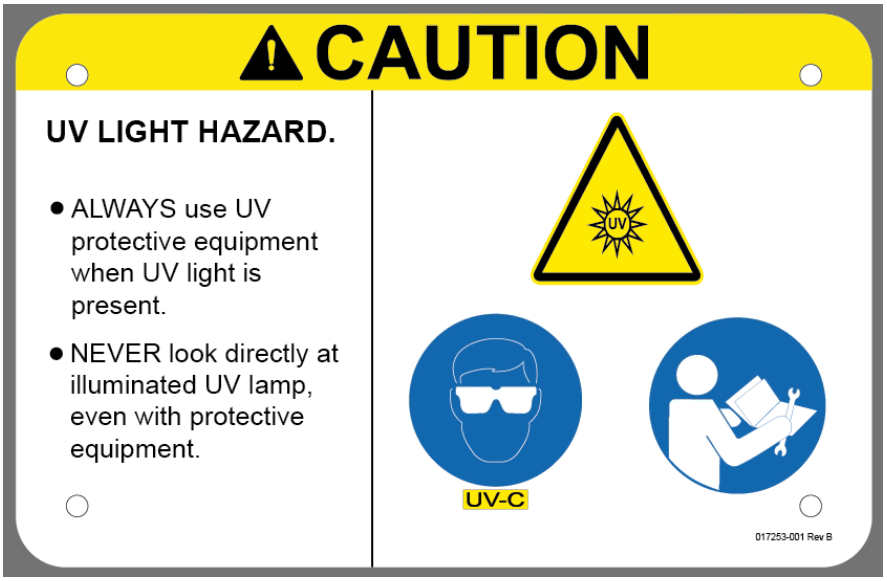

TrojanUV Solo Lamp™ Specification

General Description

1. Ultraviolet (UV) lamps will be high intensity low pressure amalgam TrojanUV Solo Lamps with nominal input wattage of 1000 Watts. Lamps that are not amalgam type will not be allowed.
2. The filament shall be significantly rugged to withstand shock and vibration.
3. Electrical connections for the lamp will consist of four (4) pins at one end of the lamp only.
4. Lamps without maintenance coating or that do not have four (4) pins are considered instant-start and are not acceptable due to reduced reliability and increased maintenance and operating costs.
5. Lamp wiring shall be Teflon-insulated stranded wire.
6. Lamps will be rated to produce zero levels of ozone.
7. Lamp data in sufficient detail to allow comparison with these specifications shall be submitted for evaluation and consideration a minimum of fifteen (15) days prior to bid.

Performance Requirements

8. Lamps will be operated by electronic lamp drivers with variable output capabilities enabling lamp dimming from 100% to 30% of nominal power.
9. Lamp aging characteristics (maintenance of UV output over time) will be independently validated in accordance with industry protocols including NWRI *Ultraviolet Disinfection Guidelines for Drinking Water and Water Reuse* (May 2003).
10. The lamp assembly will be designed to enable operation at optimum lamp efficiency across varying water temperatures and lamp power levels.
11. The lamp shall withstand a minimum of four (4) on/off cycles per day without reducing lamp life, warranty or causing any damage to the lamp.

Warranty

12. UV lamps to be warranted for 15,000 hours when operated in automatic mode, pro-rated after 9,000 hours. On/off cycles are limited to four (4) per day.
13. If a lamp fails prior to 9,000 hours a new lamp will be provided free of charge. Lamps that fail between 9,000 and 15,000 hours will be subject to a credit based on the unused portion of the lamp life.

TrojanUV Solo Lamp™ Driver Specification

General Description

1. The lamp driver shall power two (2) amalgam lamps.
2. Failure of one lamp shall not affect operation of the other lamp.
3. The lamp driver shall be programmed-start type utilizing filament preheat followed by a high voltage pulse to ignite the lamp.
4. The communication protocol shall be Modbus implemented on RS485 electrical interface.
5. The lamp driver shall be UL, CE, RoHS compliant.
6. Driver data in sufficient detail to allow comparison with these specifications shall be submitted for evaluation and consideration a minimum of fifteen (15) days prior to bid.

Performance Requirements

7. The lamp driver shall have a power factor correction circuit to ensure minimum 99% power factor and less than 5% total harmonic distortion (THD) current at the maximum power level and nominal input voltage.
8. The lamp driver electrical conversion efficiency shall be minimum 95% at the maximum power level.
9. During lamp operation, variable filament heating current shall be provided according to a predetermined curve to maintain optimum filament temperature and amalgam temperature to ensure maximum lamp life and optimum lamp efficiency across varying water temperatures and lamp power levels.
10. A ground fault in the output circuit shall be detected and communicated as a warning to the external controls system but the corresponding lamp must operate undisturbed.
11. Local visual diagnostic shall be implemented with LEDs to indicate: lamp driver status, lamp status (on, idle, preheat, fault), power, communication status.
12. To facilitate trouble shooting and improve equipment reliability, a minimum of the following external protections / status / warnings and alarms must be implemented:

    Lamp status, lamp driver status, lamp driver high temperature, input voltage out of range, lamp arc circuit open / short / out of range, lamp filament open circuit / out of range, end of lamp life (EOLL), ground fault, lamp circuit leakage (water in the sleeve), communication time-out.

Warranty

13. The lamp driver will be warranted for ten (10) years, pro-rated after 1 year.

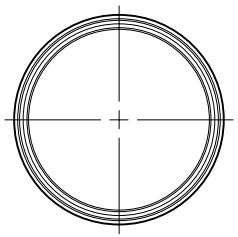

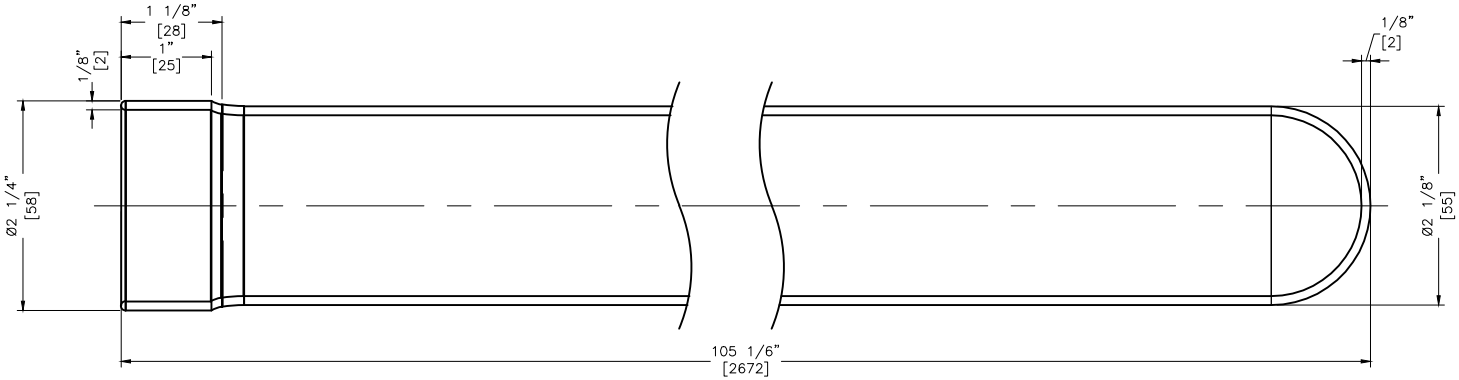

END VIEW
SCALE: AS SHOWN

SIDE VIEW
SCALE: AS SHOWN

NOTES:

1. MATERIAL: QUARTZ GE TYPE 214, OR EQUIVALENT.
2. [ ] INDICATES mm UNLESS OTHERWISE NOTED.

TROJANUV

CONFIDENTIALITY NOTICE
Copyright© 2013 by Trojan Technologies. All rights reserved. No part of this document may be reproduced, stored in a retrieval system, or transmitted in any form, without the written permission of Trojan Technologies.

DESCRIPTION: TROJANUVSIGNA, QUARTZ SLEEVE			STD. DRAWING NO. SG0031
DRAWN BY : KDH	DATE : 13OC10		REFERENCE NO. 908041G
CHECKED BY : SAH	DATE : 13OC11		
APPROVED BY : RLM	DATE : 13OC11		DWG NO. D01 / REV. A
SCALE (8.5x11) : NOT TO SCALE	LOG NUMBER : N/A		

TROJAN UV
WATER CONFIDENCE™

COMPONENT SPECIFICATION

DESCRIPTION: CABLE WRAP, SPIRAL **DOC # 337907G**

1. SPECIFICATION:

Description: ultraviolet resistant blank polyethylene spiral wrap designed for outdoor use.

Material:	Polyethylene
Colour:	Black
Outside Diameter:	See Chart
Wall Thickness:	See Chart
Max Operating Temp:	190°F (88°C)
Min Operating Temp:	-76°F (-60°C)
Weight (lbs/M ft):	varies (See attachment)
Max Bundle Range:	varies (See attachment)
Approvals:	Fed.Spec. L-P-390, MIL-P 21922, A-A-59602
Unit of Measurement:	feet

2. PART NUMBER AND DESCRIPTION CHART:

Trojan Part Number	Description	OD	Wall Thickness	Manufacturer Part Number
337907-001	CABLE WRAP, SPIRAL 1.5”OD	1.5” (38 mm)	0.1” (2.5mm)	HT1-1/2UR

REV	SHT	ZONE	REVISION DESCRIPTION	LOG NO.	REV BY	CHK BY	APPD BY	DATE YYYY-MM-DD
A			DRAWING RELEASED	17-0216	JVV	KRB	RDG	2017-06-14

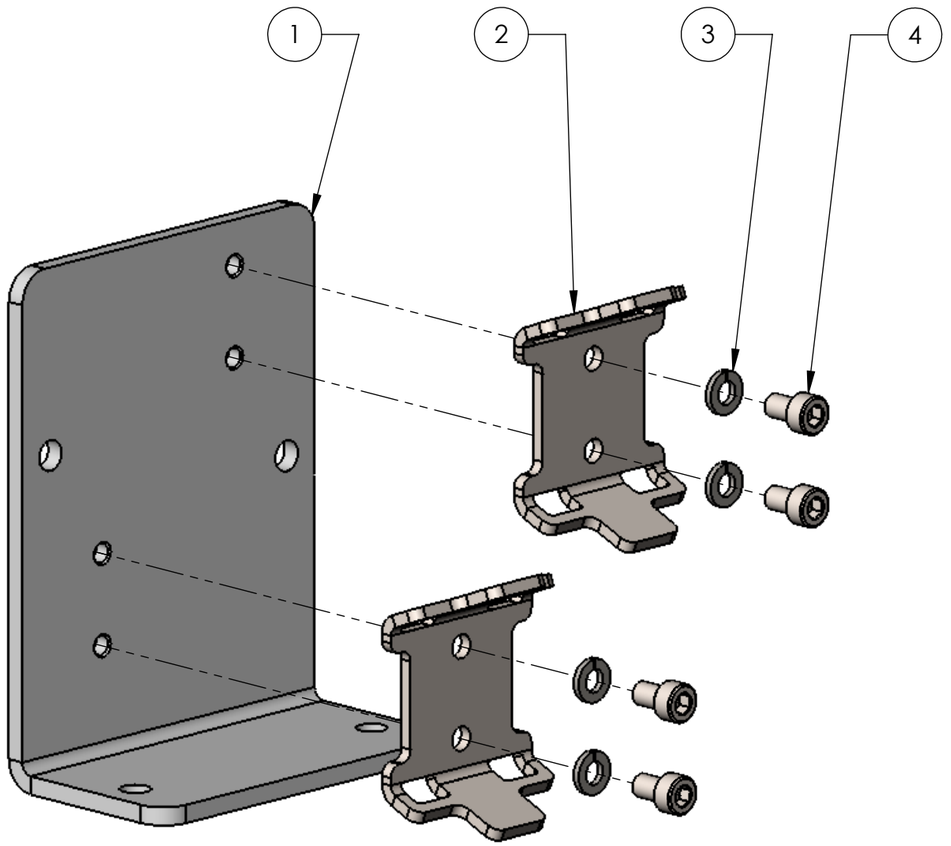

EXPLODED VIEW:
337909-002 SHOWN

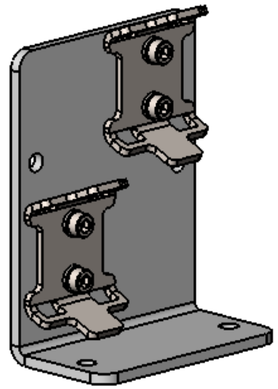

337909-002 SHOWN

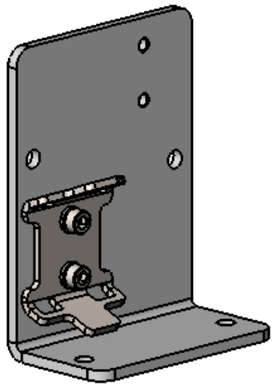

337909-001 SHOWN

CHART 1: PART NUMBER & DESCRIPTION

PART NUMBER	DESCRIPTION
337909-001	MOUNT ASSY, TROUGH 8-12L
337909-002	MOUNT ASSY, TROUGH 14-24L

NOTES:
1/ ASSEMBLY INSTRUCTIONS:
-HAND TIGHTEN ALL HARDWARE
-APPLY ANTI-SIEZE TO SCREWS BEFORE ASSEMBLY
-TORQUE M6X10 SCREWS TO 50 in-lbs (5.6 N-m)

ITEM NO	337909-001/QTY.	337909-002/QTY.	ITEM DESCRIPTION	PART NO.	DRAWING NO.
4	2	4	SCREW, SHCAP M6X10 316 DIN 912	010368-MNCB13160	010368G
3	2	4	WASHER, LOCK REG 6MM 316	012075-AA0060316	012075G
2	1	2	BRACKET, CABLE BUNDLE	337890	337890
1	1	1	PLATE, SPIRAL MOUNT DOUBLE	337892	337892

UNLESS OTHERWISE SPECIFIED:
DO NOT SCALE DRAWING
INTERPRET DIMENSIONS AND TOLERANCES PER ASME Y14.5M-2009

DIMENSIONS ARE IN MILLIMETERS

TOLERANCES APPLY AS SHOWN BELOW:
0 PL DEC ± 1
1 PL DEC ± 0.5
2 PL DEC ± 0.25
ANGLE ± 1.0

REMOVE ALL BURRS. ALL CORNERS R.25mm OR BREAK EDGE. CRITICAL CHARACTERISTIC

THIRD ANGLE PROJECTION

COPYRIGHT BY TROJAN TECHNOLOGIES, , ALL RIGHTS RESERVED.

SolidWorks MAINTAINED DATA CHANGES SHALL BE INCORPORATED ELECTRONICALLY

DRAWN BY	JVV
CREATED ON	2017-05-24
RELEASE LOG #	17-0216

TROJAN UV
A TROJAN TECHNOLOGIES BUSINESS
3020 GORE ROAD, LONDON, ONTARIO, CANADA, N5V-4T7

DESCRIPTION
MOUNT ASSY, TROUGH SIGNA 2R

DWG NO.	REV	MASS	SCALE	SHEET	SIZE
337909G	A	0.88 Kgs	1:2	1 OF 1	B

ELECTRICAL

DRAWINGS & CUT SHEETS

SECTION CONTENTS

System Control Center (SCC)

3410090 - Rev. A

Bill of Materials / Catalogue Data (Major Components Only)

Power Distribution Center (PDC)

341010 - Rev. A

Bill of Materials / Catalogue Data (Major Components Only)

Hydraulic System Center (HSC)

E810206H1 - Rev. A

E810206H2 - Rev. A

SG0024 - HSC G4 Assy - Rev. C

907717C, Sheet 15 - Wiper/Lift Hydraulic Diagram - Rev. AA

Bill of Materials / Catalogue Data (Major Components Only)

Level Sensor Control Box (LCP)

340393G - Rev. G

Bill of Materials / Catalogue Data (Major Components Only)

SCC INCOMING SUPPLY – DISCONNECTING MEANS (BY OTHERS)
120VAC 1.5KVA 12A 1PH 2WIRE +GND 60HZ

REV	REVISION DESCRIPTION	LOG NO.	REV'D BY	CHK'D BY	APPRV'D BY	DATE YYYY-MM-DD
A	RELEASE FOR PRODUCTION	22-1066	CB	SK	PSL	2023-04-05

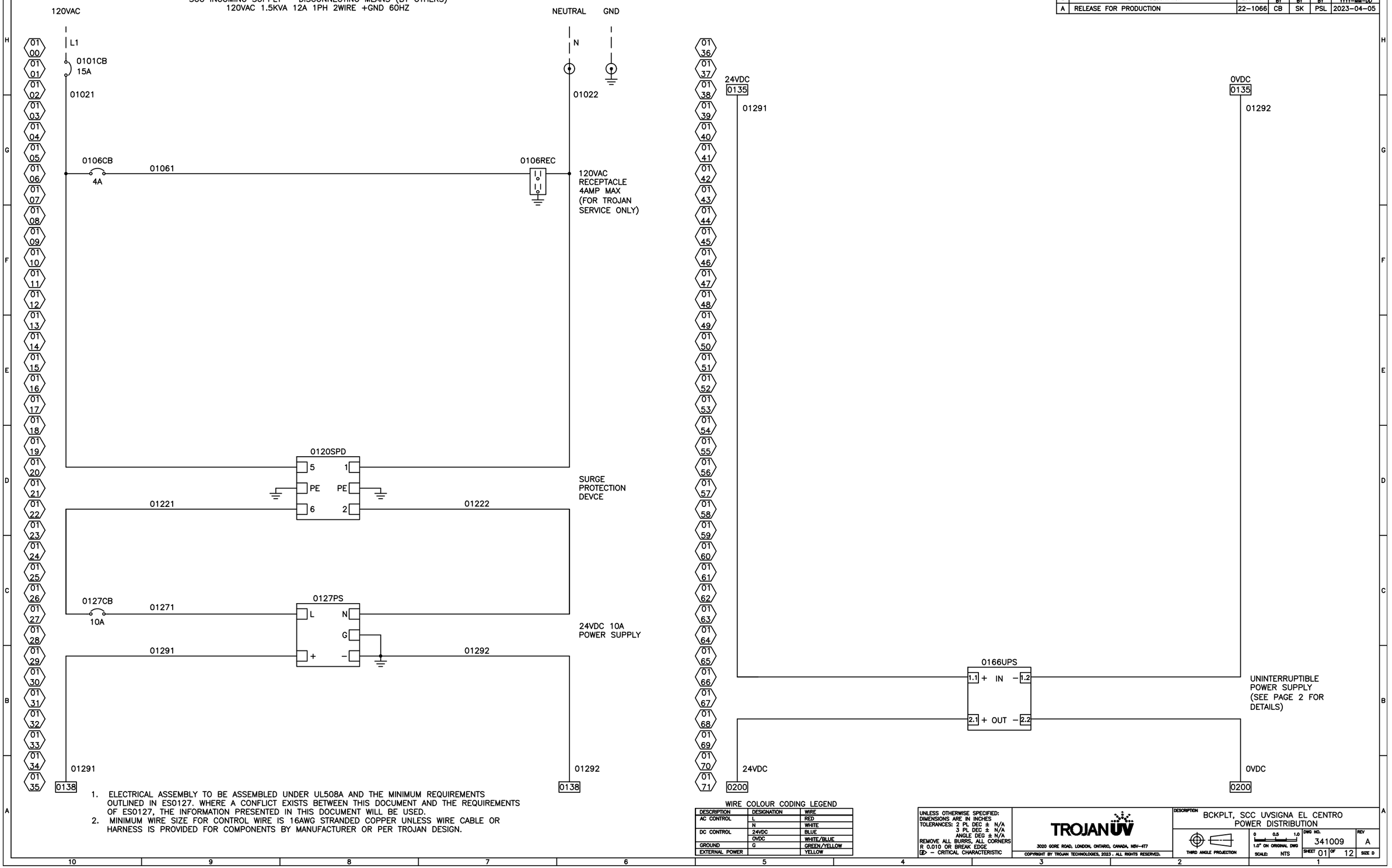

1. ELECTRICAL ASSEMBLY TO BE ASSEMBLED UNDER UL508A AND THE MINIMUM REQUIREMENTS OUTLINED IN ES0127. WHERE A CONFLICT EXISTS BETWEEN THIS DOCUMENT AND THE REQUIREMENTS OF ES0127, THE INFORMATION PRESENTED IN THIS DOCUMENT WILL BE USED.
2. MINIMUM WIRE SIZE FOR CONTROL WIRE IS 16AWG STRANDED COPPER UNLESS WIRE CABLE OR HARNESS IS PROVIDED FOR COMPONENTS BY MANUFACTURER OR PER TROJAN DESIGN.

WIRE COLOUR CODING LEGEND

DESCRIPTION	DESIGNATION	WIRE
AC CONTROL	L	RED
	N	WHITE
DC CONTROL	24VDC	BLUE
	0VDC	WHITE/BLUE
GROUND	G	GREEN/YELLOW
EXTERNAL POWER		YELLOW

UNLESS OTHERWISE SPECIFIED:
DIMENSIONS ARE IN INCHES
TOLERANCES: 2 PL DEC ± N/A
3 PL DEC ± N/A
ANGLE DEG ± N/A
REMOVE ALL BURRS, ALL CORNERS
R 0.010 OR BREAK EDGE
– CRITICAL CHARACTERISTIC

TROJANUV
3020 GORE ROAD, LONDON, ONTARIO, CANADA, N5V-4T7
COPYRIGHT BY TROJAN TECHNOLOGIES, 2023. ALL RIGHTS RESERVED.

DESCRIPTION: BCKPLT, SCC UVSIGNA EL CENTRO POWER DISTRIBUTION
THIRD ANGLE PROJECTION
0 0.5 1.0
1.0" ON ORIGINAL DWG
SCALE: NTS
DWG NO. 341009
REV A
SHEET 01 OF 12
SIZE D

+24VDC
0171

24VDC

0205CB
3A

02051

0205HMI
24V 0V
G

24VDC HMI

0209CB
2A

02091

0209ENET
24V 0V
G

ETHERNET SWITCH

0218CB
3A

02181

0218PS
24V 0V
G

PLC POWER
SUPPLY 2A

24VDC
0236

0VDC
0171

0VDC

0VDC
0236

+24VDC
0235

24VDC

0600

0VDC
0235

0VDC

0600

UPS DETAILS

0166UPS

0258BAT
4AH BATTERY MODULE
+
−

02591
02601
02611

4.1 +
4.2 −
4.3 uC
BAT

ALARM
3.2 24VDC 0734
3.3 07341 0734

BATTERY MODE 3.4 07321 0732
READY 3.5
SGND 3.9

NOTE: IN ORDER TO ENSURE OPTIMUM BATTERY LIFE AND UPS PERFORMANCE, THE CONTROL PANEL SHOULD BE LOCATED IN AN ENVIRONMENT THAT ALLOWS THE INTERNAL TEMPERATURE OF THE PANEL TO BE MAINTAINED AT LESS THAN 40°C.
EXPECTED BATTERY BACKUP RUNTIME (APPROX.): 20 MINUTES
CONNECT UPS TO A SOURCE AND LET THE ENERGY STORAGE DEVICE CHARGE FOR 24 HOURS BEFORE APPLYING THE LOAD.

TROJANUV
3020 GORE ROAD, LONDON, ONTARIO, CANADA, N5V-4T7
COPYRIGHT BY TROJAN TECHNOLOGIES, 2023 . ALL RIGHTS RESERVED.

DESCRIPTION: BCKPLT, SCC UVSIGNA EL CENTRO
24VDC POWER DISTRIBUTION

REVISED BY	CB
CHECKED BY	SK
APPROVED BY	PSL
APPROVAL DATE YYYY-MM-DD	2023-04-05
DWG NO.	341009
REV	A
SHEET	02 OF 12
SIZE	D
SCALE:	NTS

1.0" ON ORIGINAL DWG (0 0.5 1.0)

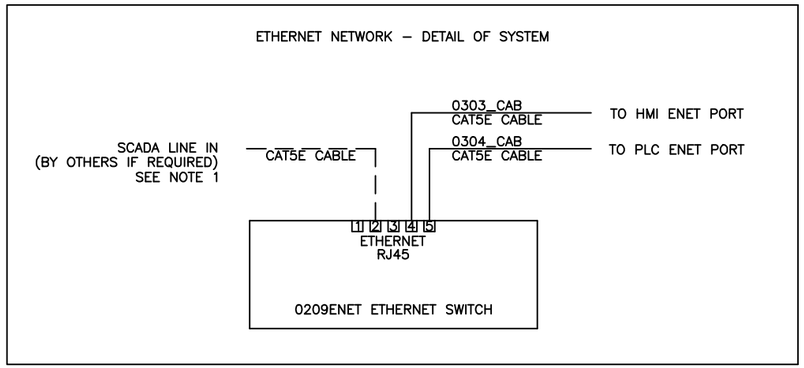

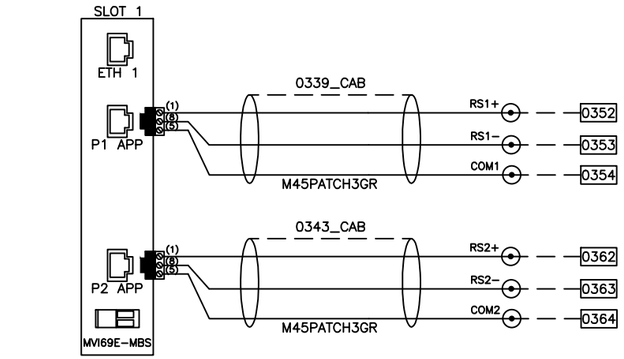

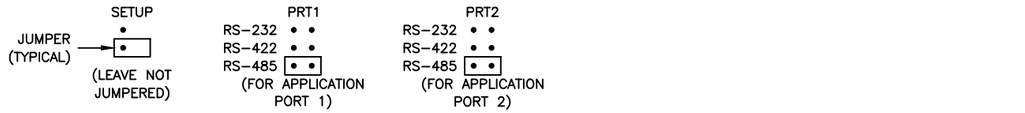

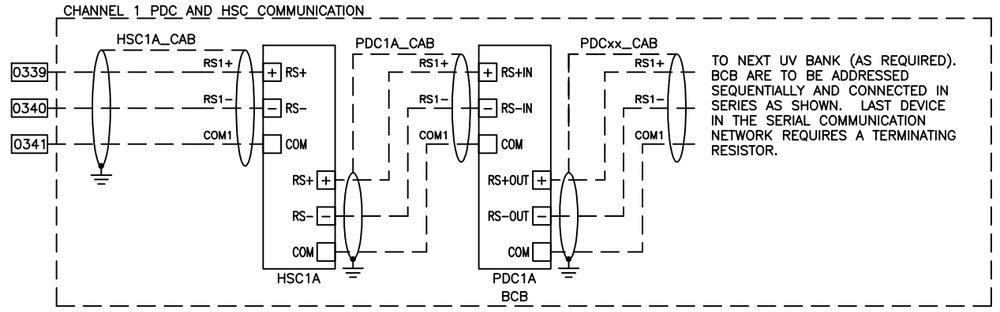

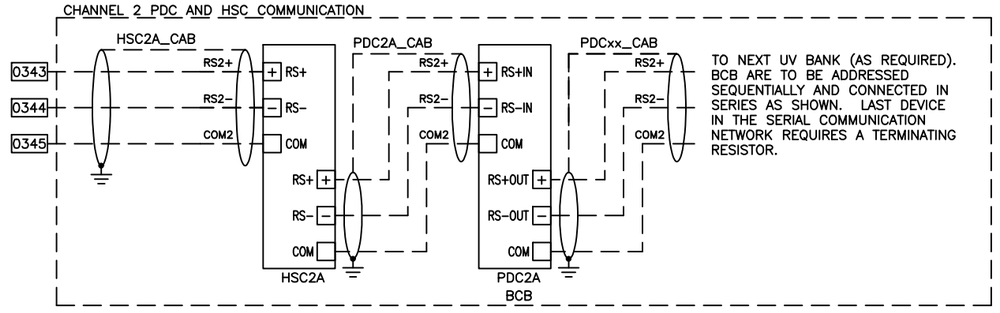

NOTE:
1. ETHERNET CABLE TO BE SHIELDED AND PROPERLY GROUNDED

COPYRIGHT BY TROJAN TECHNOLOGIES, 2023 . ALL RIGHTS RESERVED.

TROJAN UV
3020 GORE ROAD, LONDON, ONTARIO, CANADA, N5V–4T7

DESCRIPTION: BCKPLT, SCC UVSIGNA EL CENTRO COMMUNICATIONS DIAGRAM
REVISED BY: CB
CHECKED BY: SK
APPROVED BY: PSL
APPROVAL DATE YYYY–MM–DD: 2023–04–05
DWG NO.: 341009
REV: A
SCALE: NTS
1.0" ON ORIGINAL DWG
SHEET 03 OF 12
SIZE D

CUSTOMER INTERCONNECTS

20PT TERMINAL BLOCK MODULE PHOENIX 2281047

SLOT 02
4CH ANALOG INPUT CARD
AB 1769–IF4

AIW0_CAB

4–20mA SIGNAL

1	V IN 0+		
2	V/I IN 0–	FLOW SIGNAL INPUT	
3	I IN 0+		
4	ANLG COM		
04091	5	V IN 1+	
	6	V/I IN 1–	SPARE
	7	I IN 1+	
8	ANLG COM		
04171	9	V IN 2+	
	10	V/I IN 2–	SPARE
	11	I IN 2+	
12	ANLG COM		
04251	13	V IN 3+	
	14	V/I IN 3–	SPARE
	15	I IN 3+	
16	ANLG COM		

AI_CAB1
(PHOENIX CONTACT 2296391)

JUMPER DETAIL (TYPICAL)
SEE NOTE 2

V IN +
V/I IN –
I IN +

SLOT 02

PLC ANALOG INPUT MODULE
ALLEN BRADLEY 1769–IF4
(BOM ITEM 11)

CARD ADAPTER
PHOENIX CONTACT 2304461
(BOM ITEM 10)

AI_CAB1

PRE WIRED CABLE
PHOENIX CONTACT 2296391
(BOM ITEM 09)

EXT POWER SWITCH
BUS POWER
EXT POWER

20PT TERMINAL BLOCK
MODULE PHOENIX
CONTACT 2281047
(BOM ITEM 08)

SLOT 02
AI 0–3

NOTE:–
1. ALL SIGNAL ISOLATION AND LOOP POWER FOR ANALOG INPUTS IS TO BE PROVIDED BY THE CUSTOMER.
2. UNUSED ANALOG INPUTS MUST BE JUMPERED OUT AS SHOWN FOR "SPARE".

TROJANUV
3020 GORE ROAD, LONDON, ONTARIO, CANADA, N5V–4T7
COPYRIGHT BY TROJAN TECHNOLOGIES, 2023 . ALL RIGHTS RESERVED.

DESCRIPTION: BCKPLT, SCC UVSIGNA EL CENTRO
PLC ANALOG INPUT MODULE

REVISED BY	CB	DWG NO.	REV
CHECKED BY	SK	341009	A
APPROVED BY	PSL		
APPROVAL DATE (YYYY–MM–DD)	2023–04–05	SHEET 04 OF 12	SIZE D

0 0.5 1.0
1.0" ON ORIGINAL DWG
SCALE: NTS

05 00
05 01
05 02
05 03
05 04
05 05
05 06
05 07
05 08
05 09
05 10
05 11
05 12
05 13
05 14
05 15
05 16
05 17
05 18
05 19
05 20
05 21
05 22
05 23
05 24
05 25
05 26
05 27
05 28
05 29
05 30
05 31
05 32
05 33
05 34
05 35

RESERVED FOR FUTURE DEVELOPMENT OR EXPANSION

05 36
05 37
05 38
05 39
05 40
05 41
05 42
05 43
05 44
05 45
05 46
05 47
05 48
05 49
05 50
05 51
05 52
05 53
05 54
05 55
05 56
05 57
05 58
05 59
05 60
05 61
05 62
05 63
05 64
05 65
05 66
05 67
05 68
05 69
05 70
05 71

TROJANUV
3020 GORE ROAD, LONDON, ONTARIO, CANADA, N5V-4T7
COPYRIGHT BY TROJAN TECHNOLOGIES, 2023 . ALL RIGHTS RESERVED.

DESCRIPTION: BCKPLT, SCC UVSIGNA EL CENTRO FUTURE EXPANSION
0 0.5 1.0
1.0" ON ORIGINAL DWG
SCALE: NTS
REVISED BY: CB
CHECKED BY: SK
APPROVED BY: PSL
APPROVAL DATE YYYY-MM-DD: 2023-04-05
DWG NO.: 341009
REV: A
SHEET 05 OF 12
SIZE D

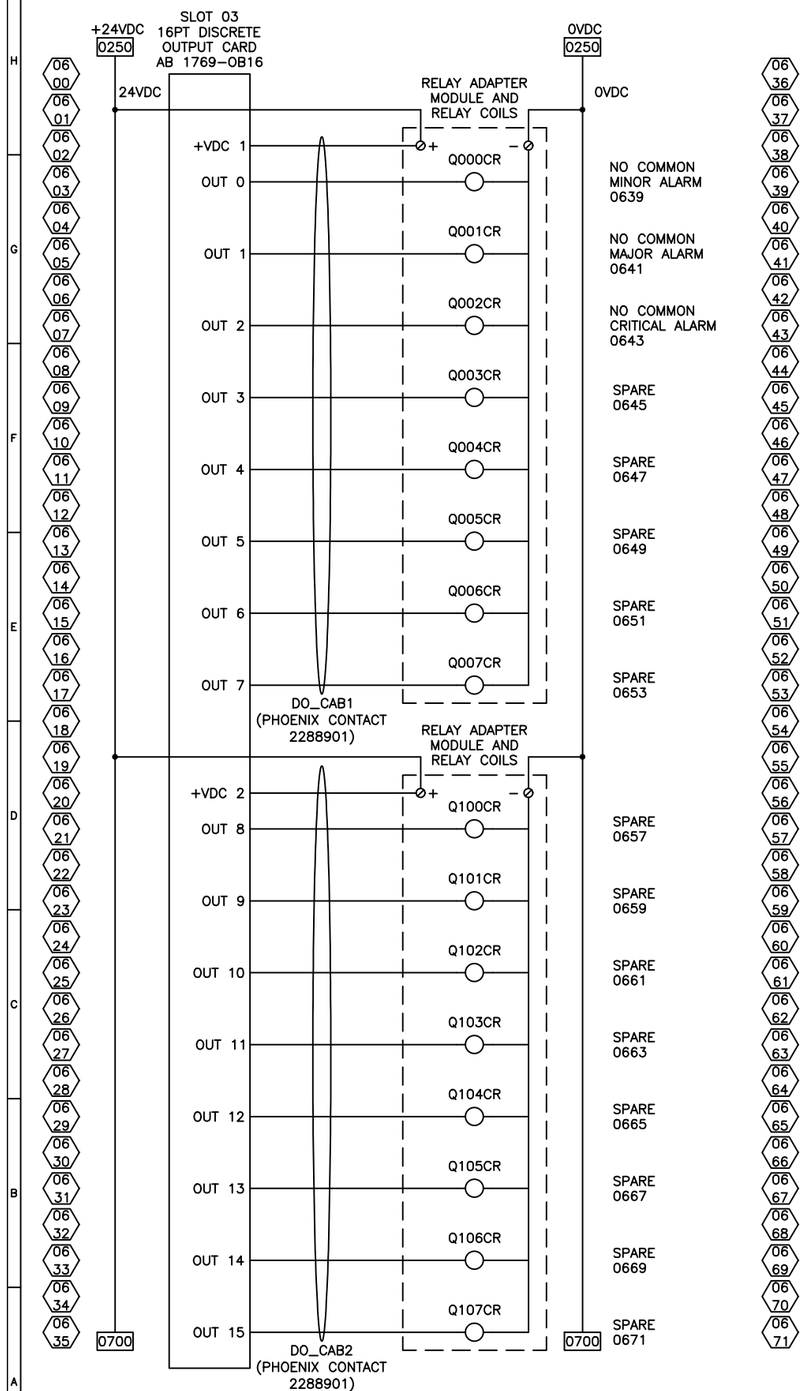

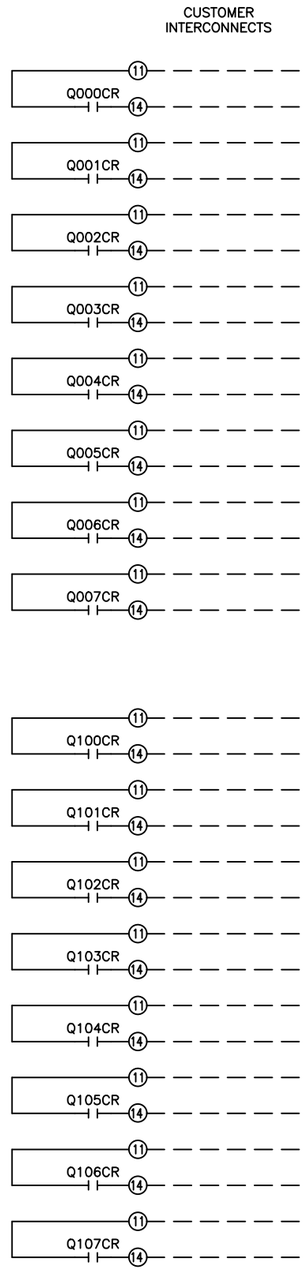

RELAY CONTACT RATING (OHMIC LOAD)	
VOLTAGE	WATTS
24VDC	140W
250VAC	1500VA

* SEE MANUFACTURER'S DATA SHEET FOR MORE RATINGS

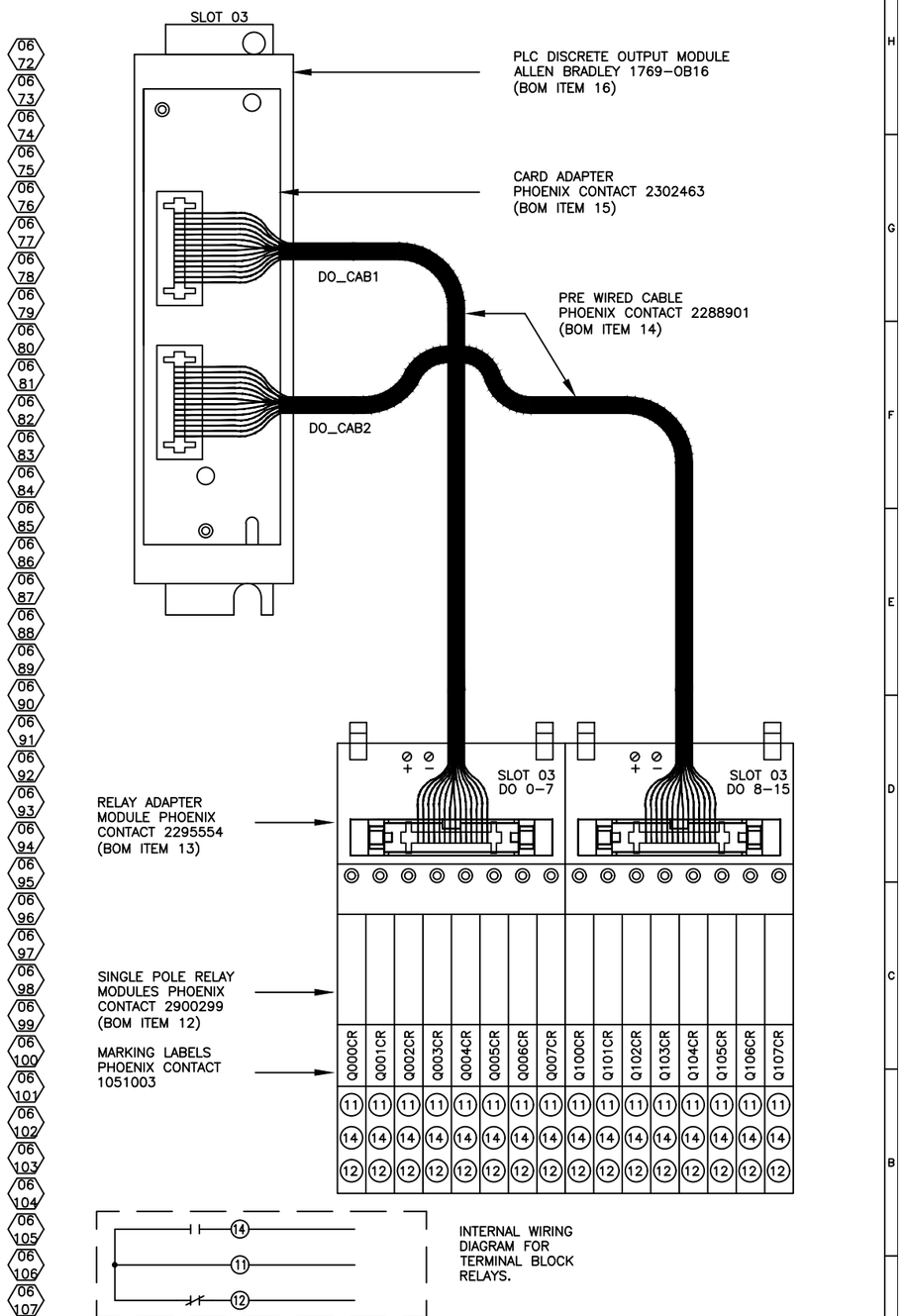

TROJANUV
3020 GORE ROAD, LONDON, ONTARIO, CANADA, N5V–4T7
COPYRIGHT BY TROJAN TECHNOLOGIES, 2023 . ALL RIGHTS RESERVED.

DESCRIPTION: BCKPLT, SCC UVSIGNA EL CENTRO
PLC DISCRETE OUTPUT MODULE

REVISED BY	CR	DWG NO.	REV
CHECKED BY	SK	341009	A
APPROVED BY	PSL		
APPROVAL DATE (YYYY–MM–DD)	2023–04–05	SHEET 06 OF 12	SIZE D

0 0.5 1.0
1.0" ON ORIGINAL DWG
SCALE: NTS

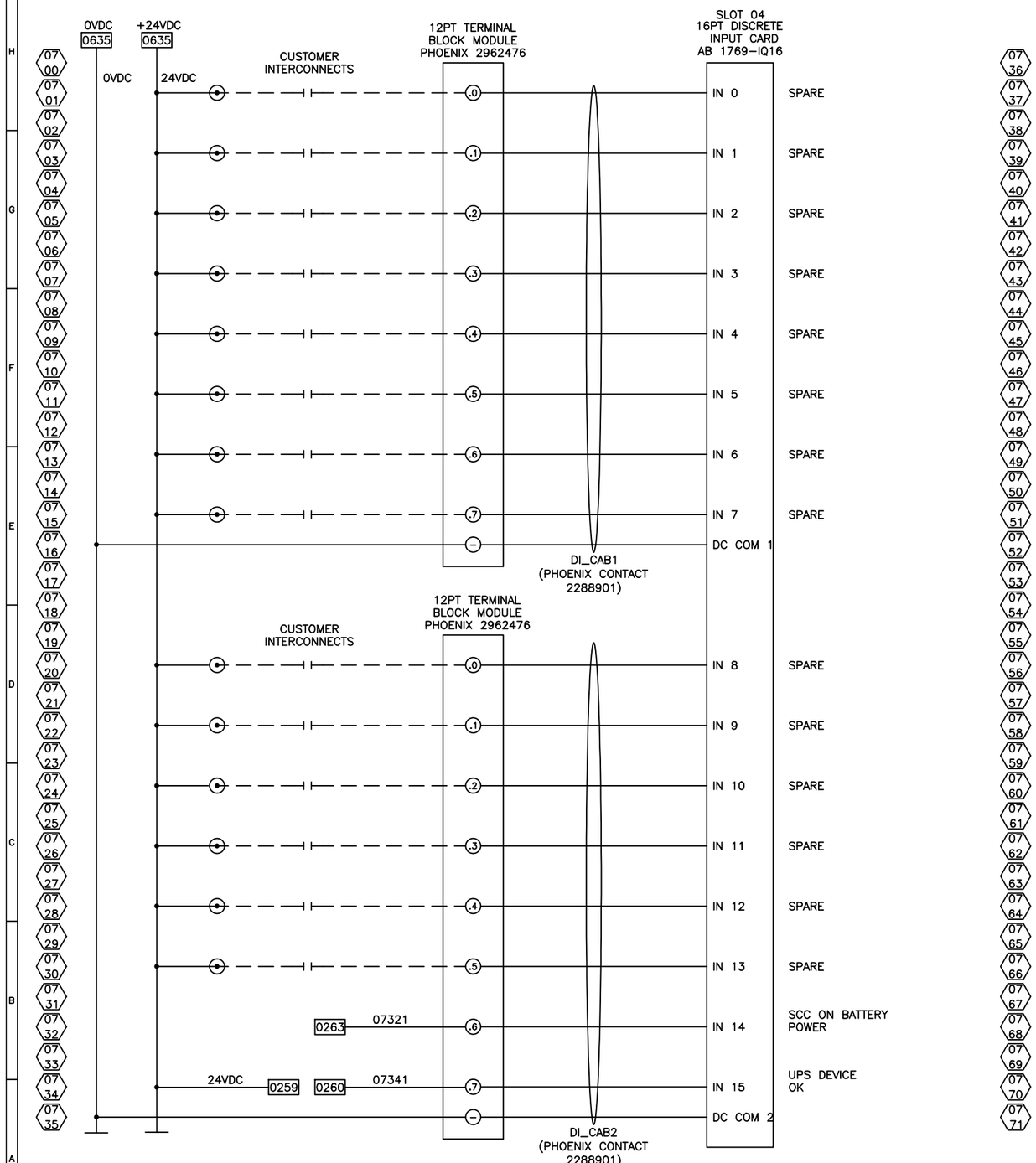

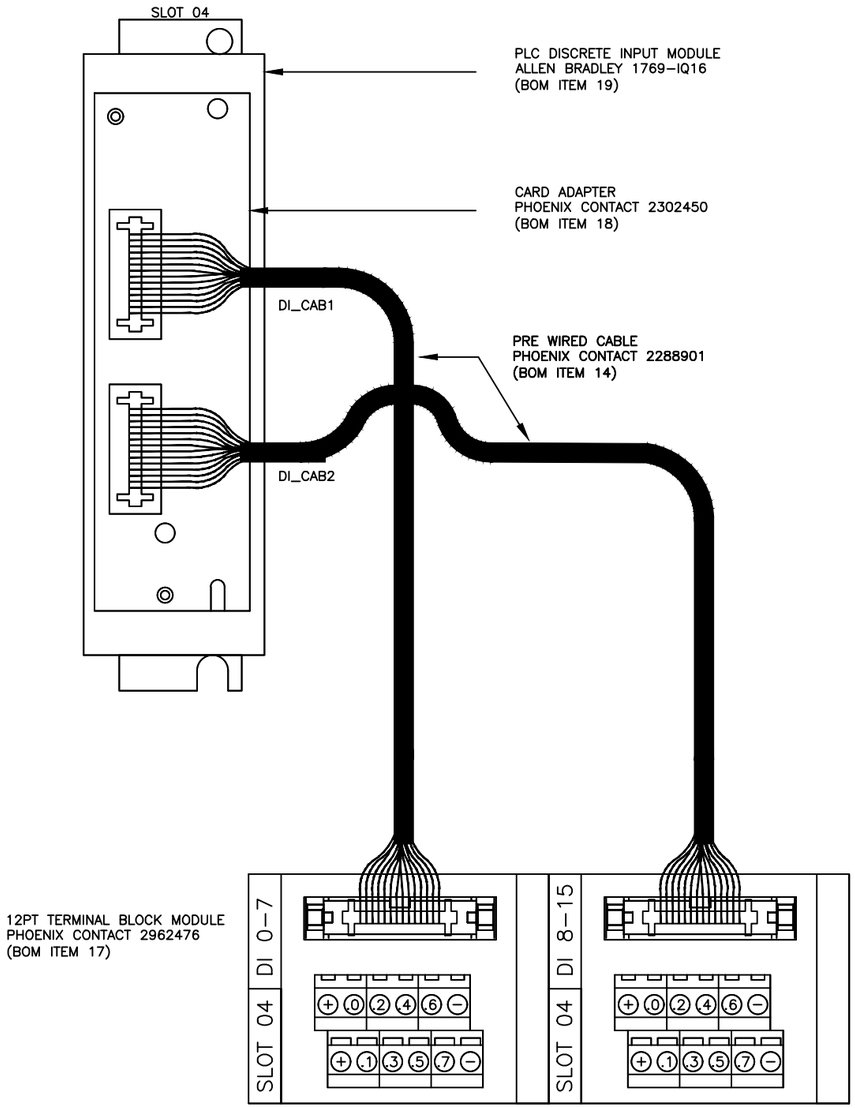

TROJAN UV
3020 GORE ROAD, LONDON, ONTARIO, CANADA, N5V-4T7
COPYRIGHT BY TROJAN TECHNOLOGIES, 2023 . ALL RIGHTS RESERVED.

DESCRIPTION: BCKPLT, SCC UVSIGNA EL CENTRO
PLC DISCRETE INPUT MODULE

REVISED BY	CB
CHECKED BY	SK
APPROVED BY	PSL
APPROVAL DATE YYYY-MM-DD	2023-04-05
DWG NO.	341009
REV	A
SHEET	07 OF 12
SIZE	D
SCALE:	NTS

0 0.5 1.0
1.0" ON ORIGINAL DWG

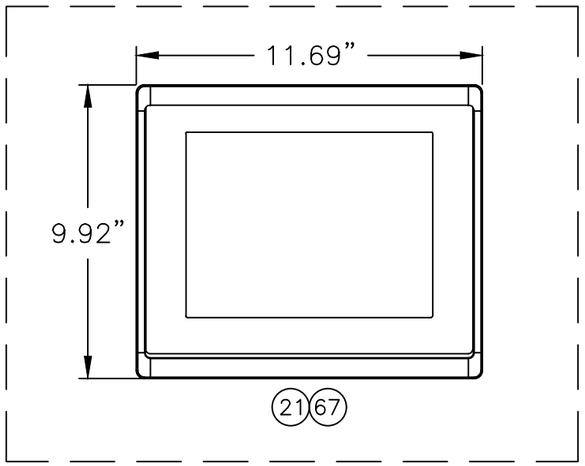

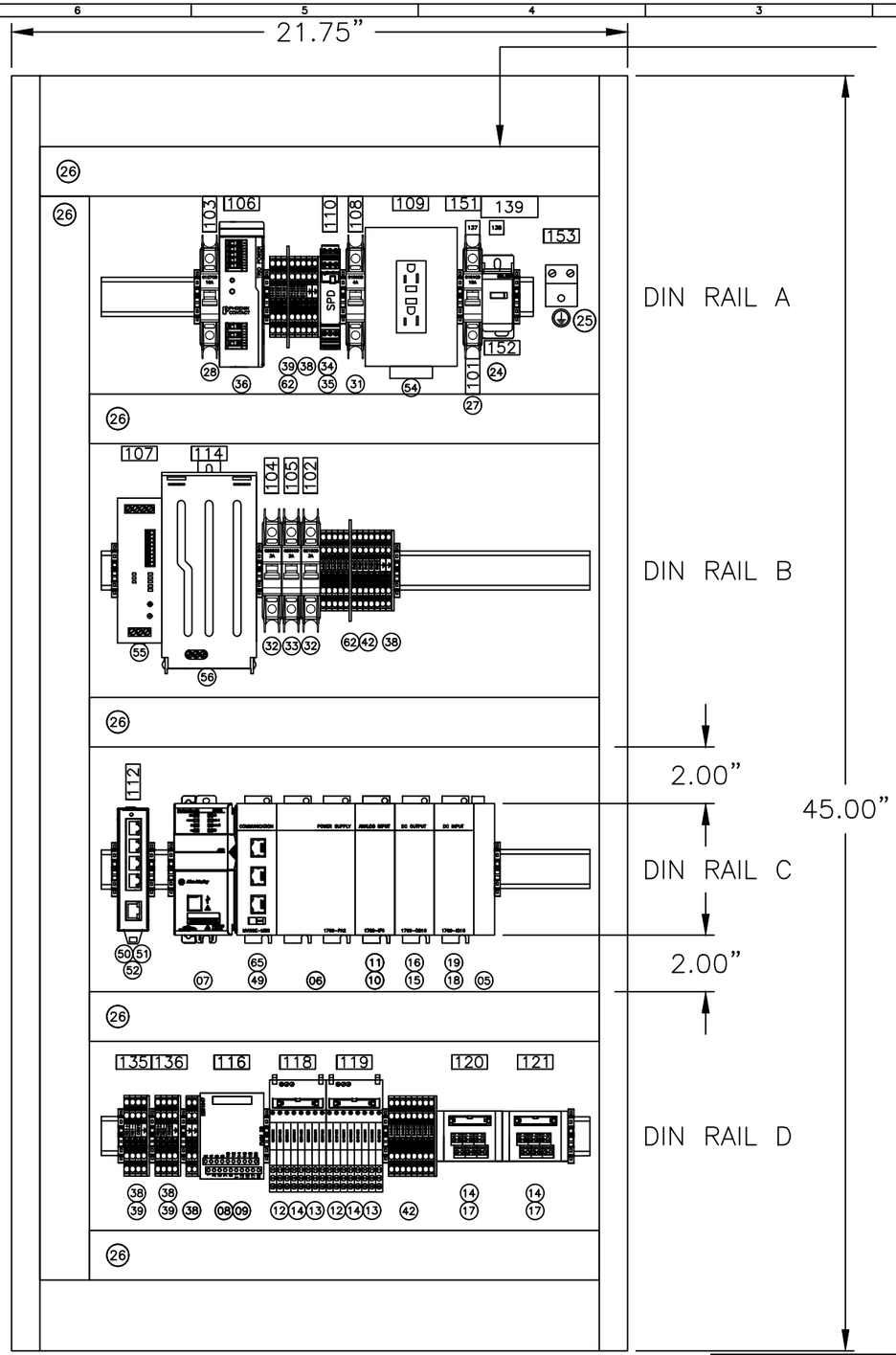

NOTES:
1. HMI MOUNTING TO BE DONE BY CUSTOMER (CUTOUT DIMENSIONS 8.82” X 10.59”)

TROJAN UV
3020 GORE ROAD, LONDON, ONTARIO, CANADA, N5V-4T7
COPYRIGHT BY TROJAN TECHNOLOGIES, 2023 . ALL RIGHTS RESERVED.

DESCRIPTION: BCKPLT, SCC UVSIGNA EL CENTRO PANEL LAYOUT
REVISED BY: CB
CHECKED BY: SK
APPROVED BY: PSL
APPROVAL DATE YYYY-MM-DD: 2023-04-05
DWG NO.: 341009
REV: A
SCALE: NTS
SHEET 08 OF 12
SIZE D

DIN RAIL A

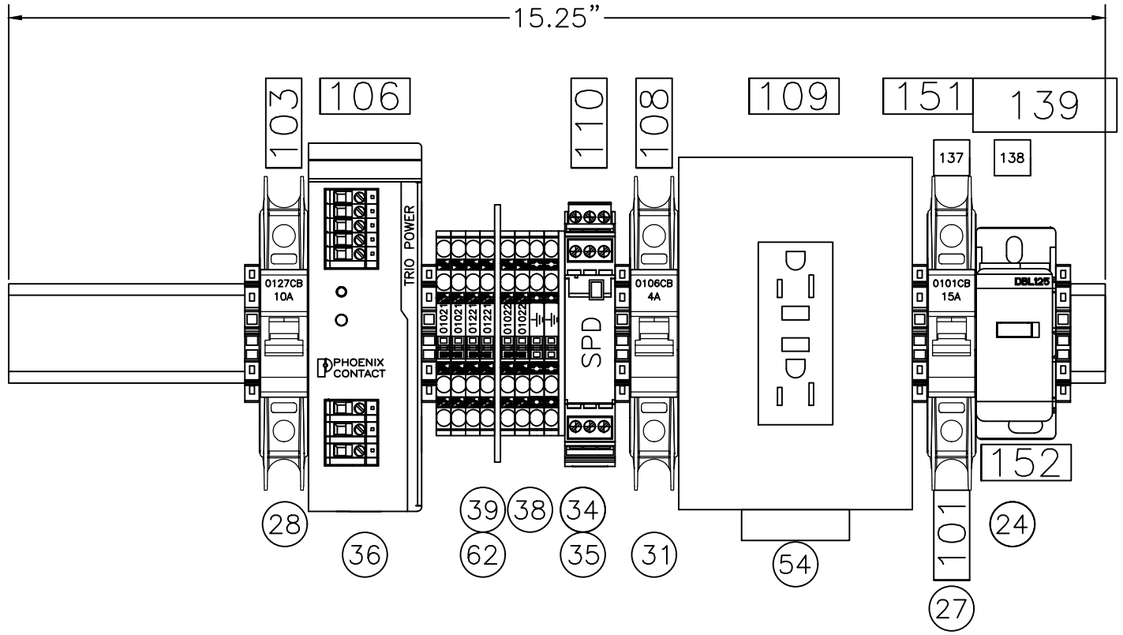

DIN RAIL B

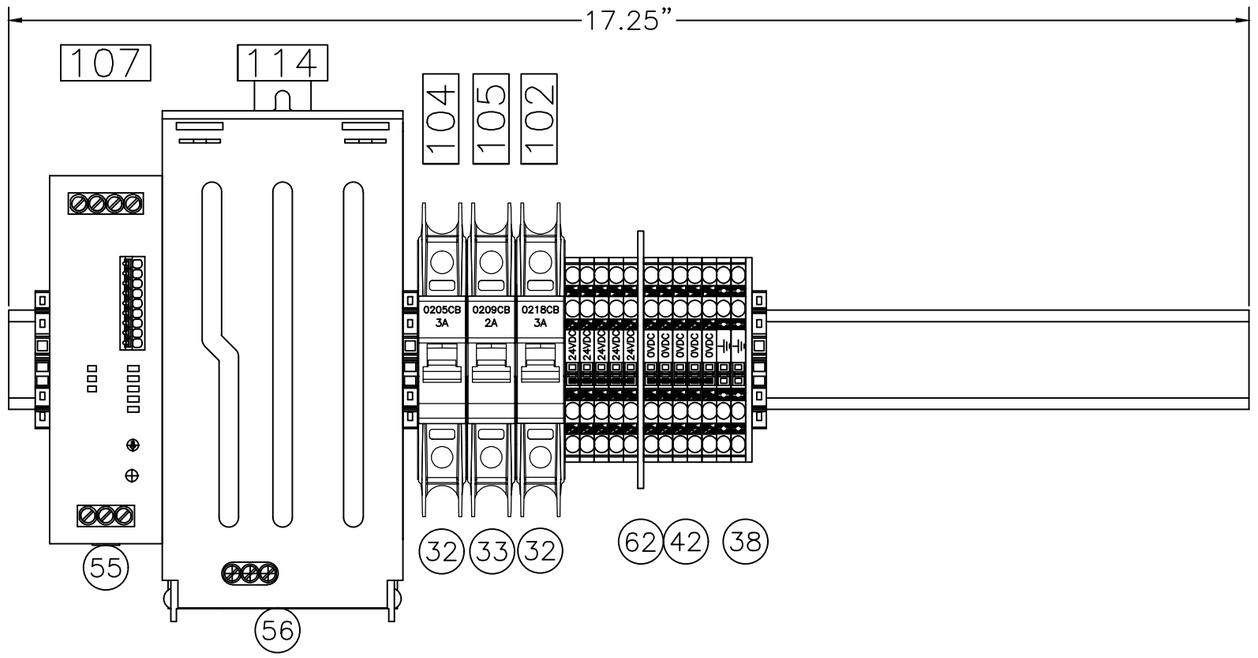

TERMINAL COLOUR CODING LEGEND

VOLTAGE	COLOUR
LINE	GREY
NEUTRAL	GREY
24VDC	BLUE
GND	GREEN/YELLOW
RS-485	GREY

TROJANUV

3020 GORE ROAD, LONDON, ONTARIO, CANADA, N5V 4T7

COPYRIGHT © TROJAN TECHNOLOGIES, 2023. ALL RIGHTS RESERVED.

DESCRIPTION: BCKPLT, SCC UVSIGNA EL CENTRO DIN RAIL A AND B

REVISED BY	CB	DWG NO.	REV
CHECKED BY	SK	341009	A
APPROVED BY	PSL		
APPROVAL DATE YYYY-MM-DD	2023-04-05	SHEET 09 OF 12	SIZE D

0 0.5 1.0
1.0" ON ORIGINAL DWG
SCALE: NTS

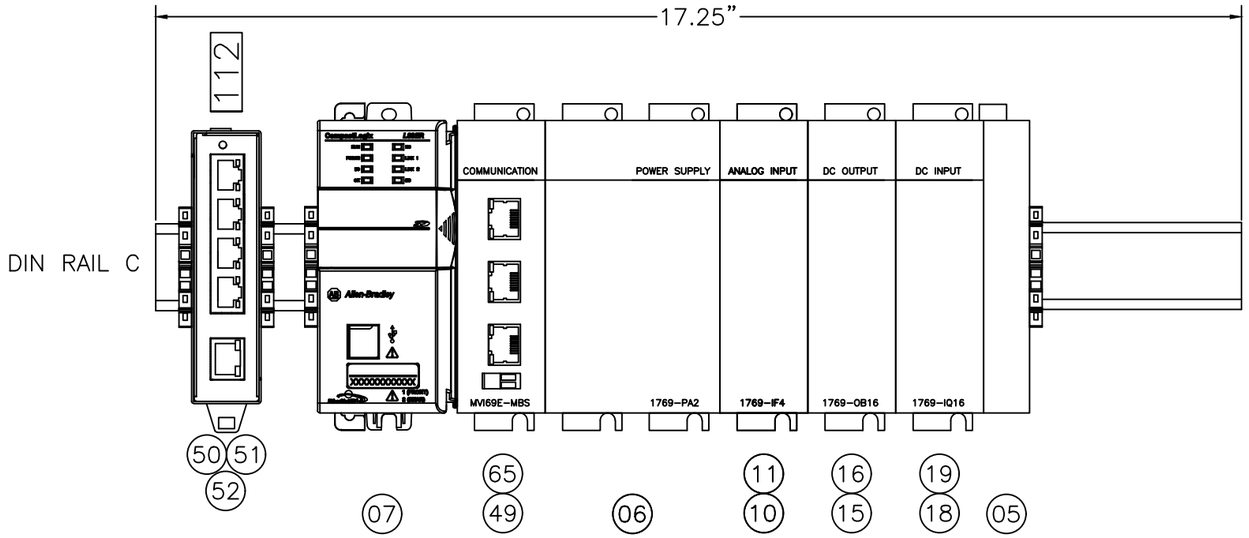

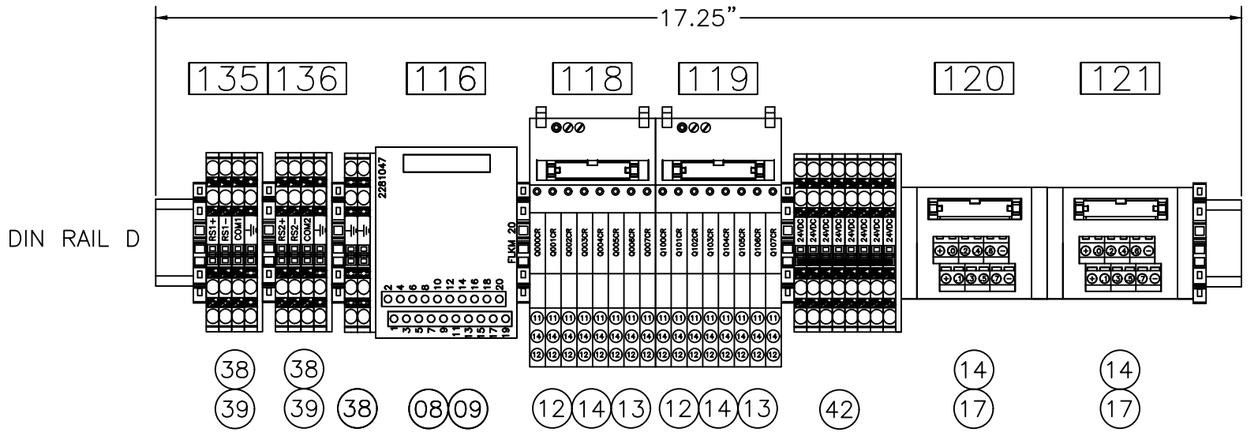

TERMINAL COLOUR CODING LEGEND

VOLTAGE	COLOUR
LINE	GREY
NEUTRAL	GREY
24VDC	BLUE
GND	GREEN/YELLOW
RS-485	GREY

TROJAN UV
3020 GORE ROAD, LONDON, ONTARIO, CANADA, N5V 4T7
COPYRIGHT © TROJAN TECHNOLOGIES, 2023. ALL RIGHTS RESERVED.

DESCRIPTION: BCKPLT, SCC UVSIGNA EL CENTRO DIN RAIL C AND D

REVISED BY	CB	DWG NO.	REV
CHECKED BY	SK	341009	A
APPROVED BY	PSL		
APPROVAL DATE YYYY-MM-DD	2023-04-05	SHEET 10 OF 12	SIZE D

0 0.5 1.0
1.0" ON ORIGINAL DWG
SCALE: NTS

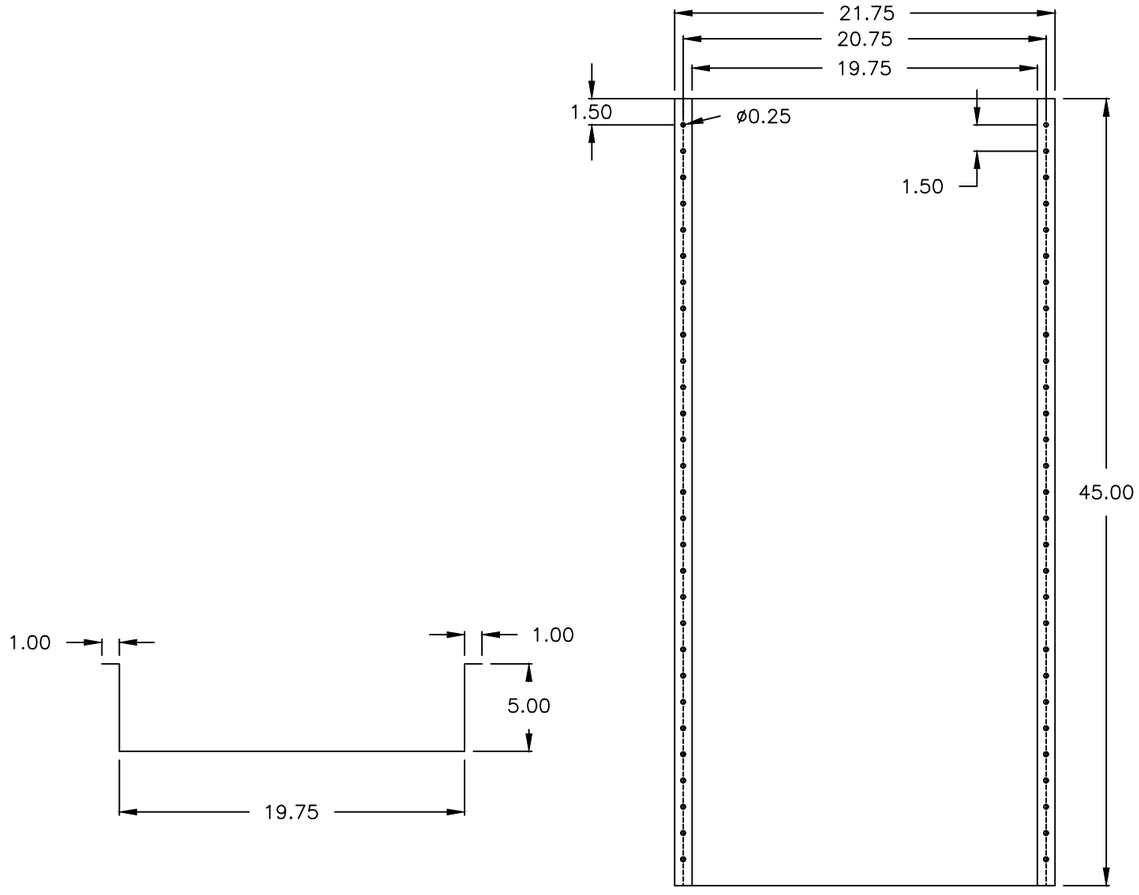

BOTTOM

FRONT

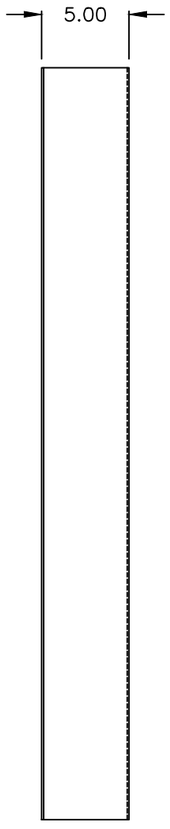

SIDE

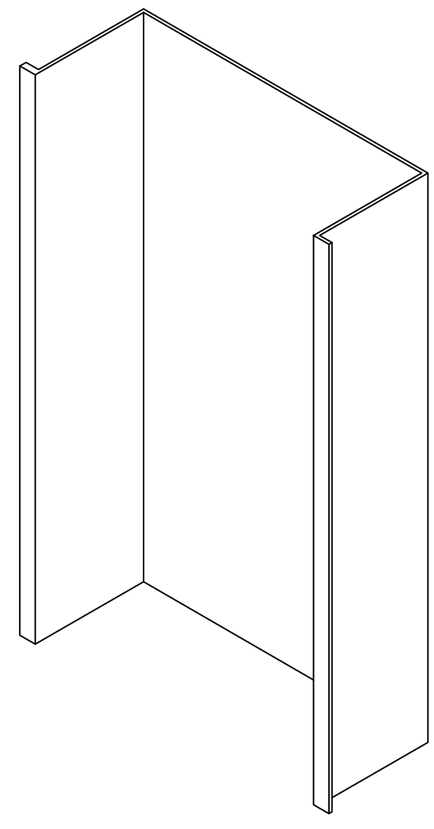

ISOMETRIC VIEW

TROJAN UV 3020 GORE ROAD, LONDON, ONTARIO, CANADA, N5V 4T7	DESCRIPTION: BCKPLT, SCC UVSIGNA EL CENTRO BACKPLATE		
COPYRIGHT © TROJAN TECHNOLOGIES, 2023 . ALL RIGHTS RESERVED.	0 0.5 1.0 1.0" ON ORIGINAL DWG	REVISED BY: CB CHECKED BY: SK APPROVED BY: PSL	DWG NO.: 341009
	SCALE: NTS	APPROVAL DATE YYYY-MM-DD: 2023-04-05	SHEET 11 OF 12
			REV: A
			SIZE: D

NOTES:

1. USE APPROPRIATE NUMBER POSITION TERMINAL BLOCK JUMPERS.
2. SD CARD THAT IS INCLUDED WITH THE PLC CPU IS TO BE LEFT IN THE PLC SD CARD SLOT.
3. TROJAN ONLY: REFERENCE LABEL BATTERIES COMPONENT LIST ES0684 FOR BATTERY LABEL APPLICATION.
4. ITEM #67 TO BE INSERTED INTO HMI SD CARD SLOT, AND HMI TO BE SHIPPED LOOSE
5. REFER TO SHEET 11 FOR DETAILED DIMENSIONS
6. ACCORDING TO UL 508A, SECTION 54, ALL FIELD WIRING CONDUCTORS, EXTERNAL TO THE PANEL SHALL BE "COPPER CONDUCTORS ONLY" AND TEMPERATURE RATINGS FOR THE FIELD WIRING CONDUCTORS RATED LESS THAN 100 AMPS SHALL BE 75°C(167°F). REFER THE FOLLOWING BELOW MENTIONED DETAILS FOR FIELD WIRING TERMINATION TIGHTENING TORQUE.

A. MAIN CIRCUIT BREAKER 2.8 N–m (24.78 lb–in)
B. DISTRIBUTION BLOCK 3.5–5 N–m (30–44 lb–in)
C. GROUND LUG 5.65 N–m (50 lb–in)

ITEM	QTY	NAMEPLATE TYPE	DESCRIPTION 1	DESCRIPTION 2	DESCRIPTION 3
155					
154					
153	1	915433–1250502A	TORQUE	50 lb.in	
152	1	915433–1250502A	TORQUE	31–44 lb.in	
151	1	915433–1250502A	TORQUE	24.78 lb.in	
150					
149	A/R	915433–GND			
148					
147					
146					
145					
144					
143					
142					
141					
140					
139	1	915433–2000752A	INCOMING SUPPLY	120V 1PH 60Hz	
138	1	915433–0500501A	N		
137	1	915433–0500501A	L1		
136	1	915433–1250502A	CH2 RS485	COMMUNICATION	
135	1	915433–1250502A	CH1 RS485	COMMUNICATION	
134					
133					
132					
131					
130					
129					
128					
127					
126					
125					
124					
123					
122					
121	1	915433–1250502A	SLOT 04	DI 8–15	
120	1	915433–1250502A	SLOT 04	DI 0–7	
119	1	915433–1250502A	SLOT 03	DO 8–15	
118	1	915433–1250502A	SLOT 03	DO 0–7	
117					
116	1	915433–1250502A	SLOT 02	AI 0–3	
115					
114	1	915433–1250501A	0258BAT		
113					
112	1	915433–1250501A	0209ENET		
111					
110	1	915433–1250501A	0120SPD		
109	1	915433–1250502A	0106REC	4A MAX	
108	1	915433–1250502A	0106CB	RECEPTACLE	
107	1	915433–1250501A	0166UPS		
106	1	915433–1250501A	0127PS		
105	1	915433–1250502A	0209CB	DATA COMM	
104	1	915433–1250502A	0205CB	HMI PS	
103	1	915433–1250502A	0127CB	24VDC PS	
102	1	915433–1250502A	0218CB	PLC PS	
101	1	915433–1250502A	0101CB	MAIN	

	ITEM	QTY	DESCRIPTION	MANUFACTURER	PART NUMBER	TROJAN NUMBER
	76					
	75					
	74					
	73					
	72					
	71					
	70					
	69					
	68					
SEE NOTE 4	67	1	MEMORY CARD, SD 1GB AB	ALLEN BRADLEY	1784–SD1	915871–100
	66					
SEE NOTE 3	65	1	PLC, AB CMPT PROSOFT MODBUS	PROSOFT	MVI69E–MBS	917411
	64					
	63					
	62	2	TERM BLK, PART PLT ATP ST QU	PHOENIX CONTACT	3030815	916050–3030815
	61					
	60					
	59					
	58					
	57					
SEE NOTE 3	56	1	UPS, IQ BATTERY 24V 4Ah	PHOENIX CONTACT	1274117	
	55	1	UPS, QUINT4 IQ 24V 20A	PHOENIX CONTACT	2907071	913905–400
	54	1	DUPLEX RECEPTACLE 120VAC WITH GFI	PHOENIX CONTACT	5600462	914817
	53					
	52	1	SWITCH, ENET FL SW 1005N–5PORT	PHOENIX CONTACT	1085039	919022–1085039
	51	1	CABLE, ENET RJ45 SHIELDED 3FT	STARTECH	S45PATCH3BL	913756–003S
	50	1	CABLE, ENET RJ45 SHIELDED 6FT	STARTECH	S45PATCH6BL	913756–006S
	49	2	CABLE, ENET RJ45 STRAIGHT 3FT	STARTECH	M45PATCH3GR	913756–003
	48					
	47	A/R	DIN RAIL, PERF 35X7.5 PHOENIX	PHOENIX CONTACT	0801733	914147
	46	A/R	TERM BLK, END STOP PHOENIX	PHOENIX CONTACT	3022276	916050–3022276
	45	A/R	TERM BLK, MARKER ZB5 PHOENIX	PHOENIX CONTACT	1050004	916050–1050004
	44	A/R	TERM BLK, END PLATE D–ST 4CON	PHOENIX CONTACT	3030514	916050–3030514
SEE NOTE 1	43	A/R	TERM BLK, JUMPER 2.5mm PNX	PHOENIX CONTACT	–	916050G
	42	18	TERM BLK, PIT 2.5 QUATTRO BLU	PHOENIX CONTACT	3209581	916049–3209581
	41					
	40					
	39	12	TERM BLK, PIT 2.5 QUATTRO GRY	PHOENIX CONTACT	3209578	916049–3209578
	38	8	TERM BLK, PIT 2.5 PE QUAT GND	PHOENIX CONTACT	3209594	916049–3209594
	37					
	36	1	PS, 24VDC 1P TRIO 10A	PHOENIX CONTACT	2866323	916051–323
	35	1	SPD, 120V 20A 1PH PHOENIX	PHOENIX CONTACT	2907922	917624–120
	34	1	SPD, BASE 1PH SCREW PHOENIX	PHOENIX CONTACT	2907924	917624–001
	33	1	BREAKER, 2A 1P AC/DC C ABB	ABB	SU201M–C2	917139–MC1020
	32	2	BREAKER, 3A 1P AC/DC C ABB	ABB	SU201M–C3	917139–MC1030
	31	1	BREAKER, 4A 1P AC/DC C ABB	ABB	SU201M–C4	917139–MC1040
	30					
	29					
	28	1	BREAKER, 10A 1P AC/DC C ABB	ABB	SU201M–C10	917139–MC1100
SEE NOTE 6	27	1	BREAKER, 15A 1P AC/DC C ABB	ABB	SU201M–C15	917139–MC1150
	26	A/R	WIRE DUCT, TYPE F LT GRY1.5x3	PANDUIT	F1.5X3LG6 / C1.5LG6	913437–006
SEE NOTE 6	25	1	LUG, GND 600V 2CON	ILSCO	AU–0	914278
SEE NOTE 6	24	1	DIST BLOCK, 115A TE	TE CONNECTIVITY	DBL125	917305–125
	23					
	22					
SEE NOTE 3	21	1	PLC, AB HMI PV+7 10 512MB	ALLEN–BRADLEY	2711P–T10C22D9P	917408–010
	20					
	19	1	PLC, AB CMPT LOGIX MODULE 16DI	ALLEN–BRADLEY	1769–IQ16	913130
	18	1	PLC, AB CMPT ADAPTER 16DI	PHOENIX CONTACT	2302450	914047–002
	17	2	PLC, AB CMPT SYS TERM 12P	PHOENIX CONTACT	2962476	914045–012
	16	1	PLC, AB CMPT LOGIX MODULE 16DO	ALLEN–BRADLEY	1769–OB16	913129
	15	1	PLC, AB CMPT ADAPTER 16DO	PHOENIX CONTACT	2302463	914047–003
	14	4	PLC, WIRING SYS CABLE 14P 0.5M	PHOENIX CONTACT	2288901	914046–005
	13	2	PLC, WIRING SYS RELAY ADAPT	PHOENIX CONTACT	2295554	914044
	12	16	RELAY, 6A 24VDC SPDT PIT PC / BLANK MARKER	PHOENIX CONTACT	2900299 / 1051003	915403–112
	11	1	PLC, AB CMPT LOGIX MODULE 4AI	ALLEN–BRADLEY	1769–IF4	913128
	10	1	PLC, AB CMPT ADAPTER 4AI/2AO	PHOENIX CONTACT	2304461	914047–001
	09	1	PLC, WIRING SYS CABLE 20P 0.5M	PHOENIX CONTACT	2296391	914046–007
	08	1	PLC, WIRING SYS TERMINAL 20P	PHOENIX CONTACT	2281047	914045–020
SEE NOTE 2	07	1	PLC, AB CMPT CPU L33ER	ALLEN–BRADLEY	1769–L33ER	916772
	06	1	PLC, AB CMPT PS 2A 24VDC	ALLEN–BRADLEY	1769–PB2	914332
	05	1	PLC, AB CMPT LOGIX END CAP	ALLEN–BRADLEY	1769–ECR	913126
	04					
	03					
	02					
SEE NOTE 5	01	1	BACKPLATE, GALVANIZED 12GA STEEL 45"X21.75	CUSTOM	CUSTOM (REFER SHEET # 11)	

TROJANUV
3020 GORE ROAD, LONDON, ONTARIO, CANADA, N5V–4T7
COPYRIGHT BY TROJAN TECHNOLOGIES, 2023 . ALL RIGHTS RESERVED.

DESCRIPTION: BCKPLT, SCC UVSIGNA EL CENTRO BILL OF MATERIALS
REVISED BY: CB
CHECKED BY: SK
APPROVED BY: PSL
APPROVAL DATE YYYY–MM–DD: 2023–04–05
DWG NO.: 341009
REV: A
SCALE: NTS
SHEET 12 OF 12
SIZE D

Dependability and Performance from a Global Leader in SD & SDHC Memory Cards

SanDisk® SDHC™ Memory Cards

Selected: 8GB | Item No. SDSDB-8192

Spec:

- Form factor: SDHC™ (4GB, 8GB, 16GB, and 32GB), SDXC™ (64GB)
- Card dimension: 0.94" x 1.25" x 0.08" (24 mm x 32 mm x 2.1 mm)
- Operating temperature: -13ºF to 185ºF (-25ºC to 85 ºC)
- Storage temperature: -40ºF to 185ºF (-40ºC to 85ºC)
- Compatibility: Compatible with SD or SDHC supporting host devices
- Security: Built-in write-protect switch prevents accidental data loss

ProSoft® TECHNOLOGY

DATASHEET

Modbus Serial Enhanced Communication Module

MVI69E-MBS

The MVI69E-MBS Modbus Serial module for CompactLogix™ is designed for all applications requiring Modbus Serial connectivity. This module comes with an Add-on Profile and an Add-on Instruction to reduce commissioning time. The MVI69E-MBS has two serial ports and can support both Master and/or Slave connectivity to interface with a variety of devices using the Modbus Protocol.

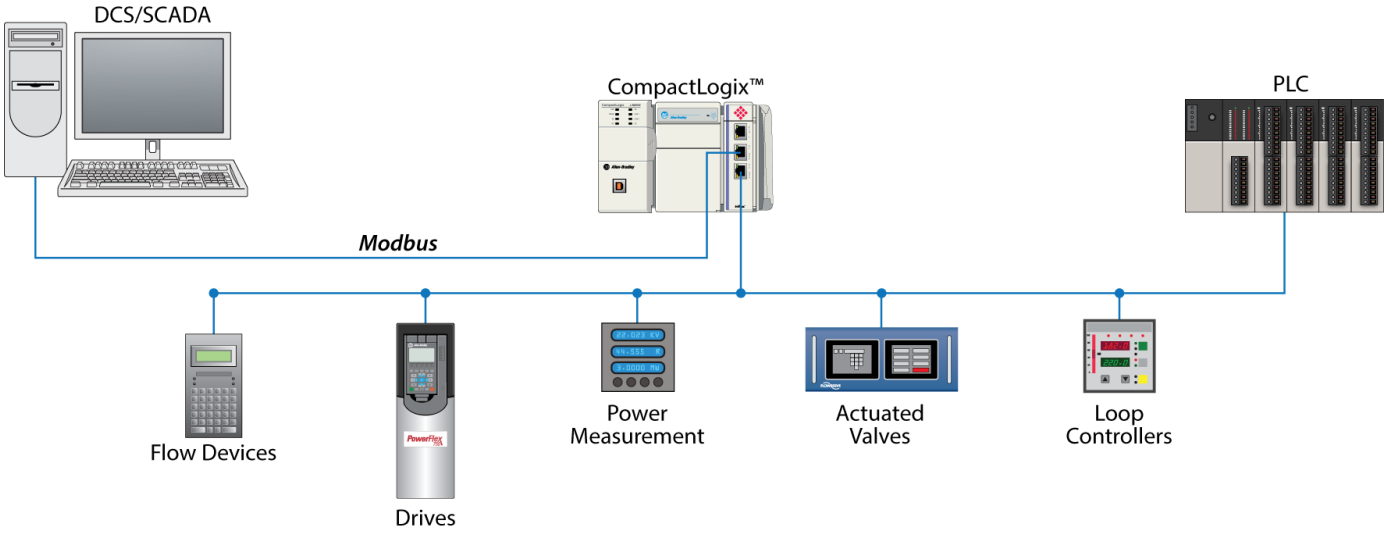

Features

- Supports CompactLogix processors with 1769 I/O bus capability version 16 and greater (MicroLogix 1500 not supported)
- Add-on Instruction creates UDTs, providing logical definitions for I/O, status, and control data
- Add-on Profile support, improving integration in the CompactLogix System
- Diagnostic data available in processor controller tags, enabling decisions to be made based upon node health
- Module configuration backed up in CompactLogix project (ACD file)
- Module acts as a co-processor reducing impact to PLC scan time
- Supports up to 10,000 words of data
- Supports up to 250 Modbus Commands per port
- Each port can be configured individually as a Modbus Master or Modbus Slave device
- Supports Enron and Daniel-style Floating point data implementations
- Suitable for SCADA and field device interface applications

General Specifications

Configuration	ProSoft Configuration Builder	
I/O Size	60/120/240 - 16 bit integers	
Communication parameters	Baud Rate: 110 to 115K baud Stop Bits: 1 or 2 Data Size: 7 or 8 bits Parity: None, Even, Odd RTS Timing delays: 0 to 65535 milliseconds	
Modbus Modes	RTU mode (binary) with CRC-16 ASCII mode with LRC error checking	
Floating Point Data	Floating point data movement supported, including configurable support for Enron, Daniel®, and other implementations	
Modbus Function Codes Supported	1: Read Coil Status 2: Read Input Status 3: Read Holding Registers 4: Read Input Registers 5: Force (Write) Single Coil 6: Preset (Write) Single Holding Register 8: Diagnostics (Slave Only, Responds to Sub function 00)	15: Force(Write) Multiple Coils 16: Preset (Write) Multiple Holding Registers 17: Report Slave ID (Slave Only) 22: Mask Write Holding Register (Slave Only) 23: Read/Write Holding Registers (Slave Only)

Functional Specifications

Modbus Master

A port configured as a Modbus Master actively issues Modbus commands to other nodes on the Modbus network.

Command List	Up to 250 command per Master port, each fully configurable for function, slave address, register to/from addressing and word/bit count.
Polling of command list	Configurable polling of command list, including continuous and on change of state.
Status Data	Error codes available on an individual command basis. A slave status list is maintained per active Modbus Master port.

Modbus Slave

A port configured as a Modbus Slave acts as a node and permits a remote Master to interact with all data contained in the module.

Node address	1 to 247 (software selectable)
Status Data	Error codes, counters and port status available per configured slave port

ProSoft® TECHNOLOGY

Where Automation Connects™

Global Distribution

ProSoft Technology® products are distributed and supported worldwide through a network of over 500 distributors in over 50 countries. Our knowledgeable distributors are familiar with your application needs. For a complete list of distributors, go to our web site at:

www.prosoft-technology.com

Global Support

We are there for you

All ProSoft Technology products are backed with free, unlimited technical support and a three year warranty. Contact our worldwide Technical Support team directly by phone or email.

Global Offices

We are where you are

ProSoft Technology has regional offices worldwide available to help you with all your industrial application needs. If you need help choosing a ProSoft Technology solution for your particular application check out our contact information under distributor sales on the web site at:

www.prosoft-technology.com

Whether your application is large or small, our technical professionals are there to help you choose the right communication solution.

Hardware Specifications

Specification	Description
Dimensions	Standard 1769 Single-slot module
Current Load	500 mA max @ 5 VDC Power supply distance rating of 4
Operating Temp.	32° F to 140° F (0° C to 60°C)
Storage Temp.	-40° F to 185° F (-40° C to 85° C)
Relative Humidity	5% to 95% (with no condensation)
LED Indicators	OK - Module Status ETH - Ethernet Communication P1 - Port 1 Serial Communication P2 - Port 2 Serial Communication BP - Backplane Connectivity CFG - Valid Configuration
Debug Port	10/100 Ethernet Port (auto-negotiating)
App Ports (P1,P2)	RS-232, RS-485 or RS-422 RJ45 (DB-9F with supplied cable) RS-232 handshaking configurable 500V Optical isolation from backplane
Shipped with Unit	2 - RJ45 to DB-9M cables for application ports 2 - DB-9F breakout boards 1 - 6 foot Ethernet Cable (straight-through)

Agency Approvals & Certifications

Agency
ATEX; Category 3, Zone 2
CE Mark
CSA; CB Safety
Environmental
KCC
RoHS Compliant
UL/cUL; Class 1, Div. 2 Groups A, B, C, D

Additional Products

ProSoft Technology® offers a full complement of hardware and software solutions for a wide variety of industrial communication platforms. For a complete list of products, visit our web site at: www.prosoft-technology.com

Ordering Information

To order this product, please use the following:

Modbus Serial Enhanced Communication Module

MVI69E-MBS

To place an order, please contact your local ProSoft Technology distributor. For a list of ProSoft Technology distributors near you, go to: www.prosoft-technology.com and select *How to Buy* from the menu.

Copyright © 2014 ProSoft Technology, Inc., all rights reserved. 5/8/2014

Specifications subject to change without notice.

Partition plate - ATP-ST 4-QUATTRO - 3030815

Please be informed that the data shown in this PDF Document is generated from our Online Catalog. Please find the complete data in the user's documentation. Our General Terms of Use for Downloads are valid (http://download.phoenixcontact.com)

Partition plate, Length: 90.9 mm, Width: 2 mm, Height: 45 mm, Color: gray

Key commercial data

Packing unit	1 pc
GTIN	4 017918 187934
Weight per Piece (excluding packing)	6.92 GRM
Custom tariff number	85369010
Country of origin	Germany

Technical data

Product type	Partition plate

Classifications

eCl@ss

eCl@ss 4.0	27141199
eCl@ss 4.1	27141199
eCl@ss 5.0	27141145
eCl@ss 5.1	27141145
eCl@ss 6.0	27141133
eCl@ss 7.0	27141133
eCl@ss 8.0	27141133

ETIM

ETIM 2.0	EC000886
ETIM 3.0	EC000886
ETIM 4.0	EC000886
ETIM 5.0	EC000886

Partition plate - ATP-ST 4-QUATTRO - 3030815

Classifications

UNSPSC

UNSPSC 6.01	30211828
UNSPSC 7.0901	39121425
UNSPSC 11	39121425
UNSPSC 12.01	39121425
UNSPSC 13.2	39121425

© Phoenix Contact 2013 - all rights reserved
http://www.phoenixcontact.com

Uninterruptible power supply - QUINT4-UPS/24DC/24DC/20 - 2907071

Please be informed that the data shown in this PDF Document is generated from our Online Catalog. Please find the complete data in the user's documentation. Our General Terms of Use for Downloads are valid (http://phoenixcontact.com/download)

QUINT UPS with IQ Technology, for DIN rail mounting, input: 24 V DC, output: 24 V DC / 20 A, charging current: 5 A

Product Description

The intelligent QUINT UPS for integration into established industrial networks: your systems continue to be supplied with uninterrupted power, even in the event of a mains failure. The battery management system with IQ Technology and a powerful battery charger ensures superior system availability.

Your advantages

- Easy integration into networks using PROFINET, EtherNet/IP, EtherCAT® and USB interfaces
- Evaluation of state of health (SOH) and state of charge (SOC), thanks to the intelligent battery management system (BMS)
- Automatic recognition of the battery capacities and technologies (VRLA-WTR, LI-ION)
- Monitoring of output current and voltage, as well as manual connection and disconnection of the system
- SFB Technology selectively trips standard miniature circuit breakers. Loads connected in parallel continue working.

Key Commercial Data

Packing unit	1 pc
Weight per Piece (excluding packing)	681.700 g
Custom tariff number	85371091
Country of origin	China

Technical data

Dimensions

Width	40 mm
Height	130 mm
Depth	125 mm
Width with alternative assembly	123 mm
Height with alternative assembly	130 mm
Depth with alternative assembly	42 mm
Installation distance right/left (active, passive)	0 mm / 0 mm (P_{Out} ≤50 %)
Installation distance right/left (passive)	0 mm / 0 mm (P_{Out} ≥50%)

Uninterruptible power supply - QUINT4-UPS/24DC/24DC/20 - 2907071

Technical data

Dimensions

Installation distance right/left (active)	5 mm / 5 mm (P_{Out} ≥50%)
Installation distance top/bottom (active, passive)	40 mm / 20 mm (P_{Out} ≤50 %)
Installation distance top/bottom (passive)	40 mm / 20 mm (P_{Out} ≥50%)
Installation distance top/bottom (active)	50 mm / 50 mm (P_{Out} ≥50%)

Ambient conditions

Degree of protection	IP20
Inflammability class in acc. with UL 94 (housing / terminal blocks)	V0
Ambient temperature (operation)	-25 °C ... 70 °C (> 60 °C Derating: 2.5 %/K)
Ambient temperature (start-up type tested)	-40 °C
Ambient temperature (storage/transport)	-40 °C ... 85 °C
Max. permissible relative humidity (operation)	≤ 95 % (at 25 °C, non-condensing)
Climatic class	3K3 (EN 60721)
Degree of pollution	2
Installation height	≤ 4000 m

Input data

Input voltage	24 V DC
Input voltage range	18 V DC ... 30 V DC
Electric strength, max.	35 V DC (Protected against polarity reversal)
Internal input fuse	no
Inrush current	≤ 8 A (≤ 4 ms)
Reverse polarity protection	yes
Fixed backup threshold	22 V DC
Switch-on time	max. 3 s
Voltage drop, input/output	0.4 V DC

Output data (general)

Short-circuit-proof	yes
No-load proof	yes
Switch-over time	0 ms
UPS connection in parallel	no
UPS connection in series	no
Energy storage device connection in parallel	Yes, 5 (observe line protection)
Energy storage device connection in series	no
Efficiency	typ. 98 %

Output data (mains operation)

Output voltage range	18 V DC ... 30 V DC (U_{OUT} = U_{IN} - 0.4 V DC)
	18 V DC ... 32 V DC
Static Boost ($I_{Stat.Boost}$)	25 A
Dynamic Boost ($I_{Dyn.Boost}$)	30 A (5 s)

Uninterruptible power supply - QUINT4-UPS/24DC/24DC/20 - 2907071

Technical data

Output data (mains operation)

Selective Fuse Breaking (I_{SFB})	120 A (15 ms)

Output data (battery operation)

Output voltage range	19 V DC ... 28 V DC (U_{OUT} = U_{BAT} - 0.4 V DC)
Static Boost ($I_{Stat.Boost}$)	25 A
Dynamic Boost ($I_{Dyn.Boost}$)	30 A (5 s)
Selective Fuse Breaking (I_{SFB})	120 A (15 ms)

Energy storage (battery)

Battery technology	VRLA, VRLA-WTR, LI-ION
End-of-charge voltage (temperature-compensated)	25 V DC ... 32 V DC
Max. capacity	135 Ah
Nominal capacity (without additional charger)	3 Ah ... 135 Ah
Charging current (configurable)	max. 5 A
Charging time	165 min. (12 Ah)
Buffer time	22 min. (12 Ah)
Temperature compensation (configurable)	42 mV/K
Charge characteristic curve	IU_0U
Temperature sensor	yes
IQ-Technology	yes

General data

Inflammability class in acc. with UL 94 (housing / terminal blocks)	V0
MTBF (IEC 61709, SN 29500)	> 1940000 h (25 °C)
	> 1157000 h (40 °C)
	> 568100 h (60 °C)
Life expectancy (electrolytic capacitors)	192072 h
Weight	0.6 kg
Environmental protection directive	RoHS Directive 2011/65/EU
	WEEE
	Reach

Connection data, input

Connection method	Screw connection
Conductor cross section solid min.	0.2 mm²
Conductor cross section solid max.	6 mm²
Conductor cross section flexible min.	0.2 mm²
Conductor cross section flexible max.	4 mm²
Single conductor/terminal point, stranded, with ferrule, min.	0.2 mm²
Single conductor/terminal point, stranded, with ferrule, max.	4 mm²
Conductor cross section AWG min.	30
Conductor cross section AWG max.	10
Stripping length	8 mm

Uninterruptible power supply - QUINT4-UPS/24DC/24DC/20 - 2907071

Technical data

Connection data, input

Tightening torque, min	0.5 Nm
Tightening torque max	0.6 Nm

Connection data output

Connection method	Screw connection
Conductor cross section solid min.	0.2 mm²
Conductor cross section solid max.	6 mm²
Conductor cross section flexible min.	0.2 mm²
Conductor cross section flexible max.	4 mm²
Single conductor/terminal point, stranded, with ferrule, min.	0.2 mm²
Single conductor/terminal point, stranded, with ferrule, max.	4 mm²
Conductor cross section AWG min.	30
Conductor cross section AWG max.	10
Stripping length	8 mm
Tightening torque, min	0.5 Nm
Tightening torque max	0.6 Nm

Connection data for battery

Connection method	Screw connection
Conductor cross section solid min.	0.2 mm²
Conductor cross section solid max.	6 mm²
Conductor cross section flexible min.	0.2 mm²
Conductor cross section flexible max.	4 mm²
Conductor cross section AWG min.	30
Conductor cross section AWG max.	12
Stripping length	8 mm
Tightening torque, min	0.5 Nm
Tightening torque max	0.6 Nm

Standards

EMC requirements for noise immunity	EN 61000-6-1
	EN 61000-6-2
EMC requirements for noise emission	EN 61000-6-3
	EN 61000-6-4
Standard designation	Protective extra-low voltage
Standards/regulations	IEC 61010-1 (SELV)
	IEC 61010-2-201 (PELV)
Overvoltage category EN 61010-1	II (≤ 4000 m)
Overvoltage category EN 61010-2-201	II (≤ 4000 m)

Conformance/approvals

Designation	UL approval
Identification	UL/C-UL Listed UL 61010-1

Uninterruptible power supply - QUINT4-UPS/24DC/24DC/20 - 2907071

Technical data

Conformance/approvals

Designation	UL approval
Identification	UL/C-UL Listed UL 61010-2-201
Designation	UL approval
Identification	UL/C-UL Listed ANSI/ISA-12.12.01 Class I, Division 2, Groups A, B, C, D T4 (Hazardous Location)
Designation	CSA
Identification	CAN/CSA-C22.2 No. 61010-1-12
Designation	CSA
Identification	CAN/CSA-IEC 61010-2-201
Designation	CSA
Identification	CAN/CSA-C22.2 No. 213 Class I, Division 2, Groups A, B, C, D T4 (Hazardous Location)
Designation	CB scheme
Identification	IEC 61010-1
	IEC 61010-2-201
Designation	DNV
Identification	Class Guideline DNVGL-CG-0339
Additional text	Location classes: Temperature D (see Application/Limitation), Humidity B, Vibration A/C, EMC B

EMC data

Electromagnetic compatibility	Conformance with EMC Directive 2014/30/EU
Low Voltage Directive	Conformance with Low Voltage Directive 2014/35/EC
Electrostatic discharge	EN 61000-4-2
Contact discharge	8 kV (Test Level 4)
Discharge in air	15 kV (Test Level 4)
Electromagnetic HF field	EN 61000-4-3
Frequency range	80 MHz ... 1 GHz
Test field strength	20 V/m (Test Level 3)
Frequency range	1 GHz ... 6 GHz
Test field strength	10 V/m (Test Level 3)
Frequency range	1 GHz ... 6 GHz
Test field strength	10 V/m (Test Level 3)
Comments	Criterion A
Fast transients (burst)	EN 61000-4-4
Input	4 kV (Test Level 4 - asymmetrical)
Output	4 kV (Test Level 4 - asymmetrical)
Signal	4 kV (Test Level 4 - asymmetrical)
Comments	Criterion B
Surge voltage load (surge)	EN 61000-4-5
Input	1 kV (Test Level 3 - symmetrical)
	2 kV (Test Level 3 - asymmetrical)

Uninterruptible power supply - QUINT4-UPS/24DC/24DC/20 - 2907071

Technical data

EMC data

Output	1 kV (Test Level 3 - symmetrical)
	2 kV (Test Level 3 - asymmetrical)
Signal	1 kV (Test Level 2 - asymmetrical)
Comments	Criterion B
Conducted interference	EN 61000-4-6
I/O/S	asymmetrical
Frequency range	0.15 MHz ... 80 MHz
Voltage	10 V (Test Level 3)
Comments	Criterion A
Power frequency magnetic field	EN 61000-4-8
Frequency	16.67 Hz
	50 Hz
	60 Hz
Test field strength	100 A/m
Additional text	60 s
Comments	Criterion A
Frequency	50 Hz
	60 Hz
Frequency range	50 Hz ... 60 Hz
Test field strength	1 kA/m
Additional text	3 s
Frequency	0 Hz
Test field strength	300 A/m
Additional text	DC, 60 s
Criterion A	Normal operating behavior within the specified limits.
Criterion B	Temporary impairment to operational behavior that is corrected by the device itself.

Environmental Product Compliance

REACh SVHC	Lead 7439-92-1

Phoenix Contact 2021 © - all rights reserved
http://www.phoenixcontact.com

DIN-Rail Mounted Service Outlets

Data Sheet 1476B

June 2003

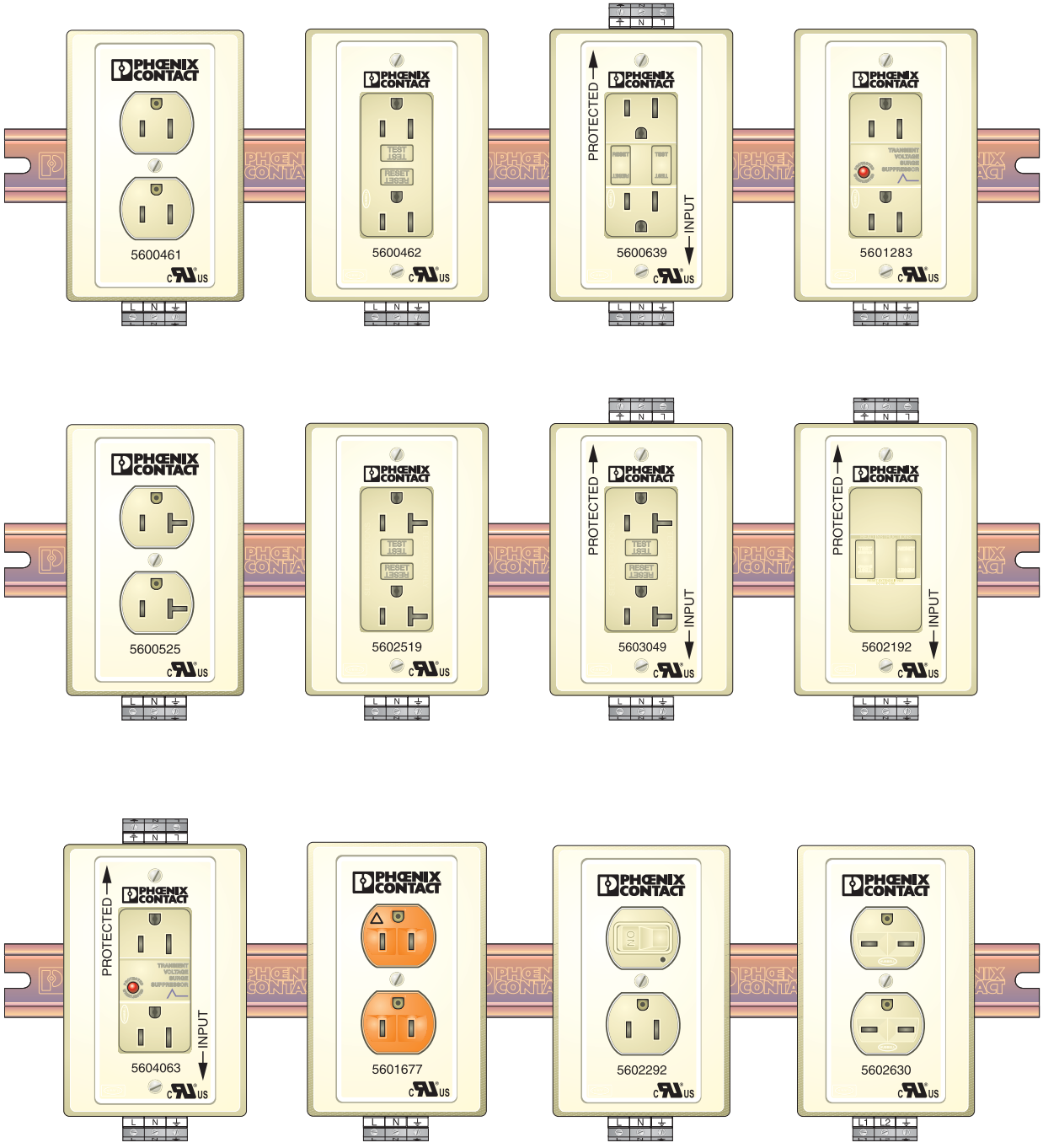

1476B001

DIN-Rail Mounted Service Outlets Single Outlets for 250 V ac Use

Data Sheet 1476B

June 2003

Description

The SD and EM-DUO family of service outlets provides a fully enclosed touchproof service outlet for mounting on DIN-rail for today's control cabinets.

The SD series of outlets provides the maximum space savings while providing one outlet for the control panel. The SD outlets are capable of a 15 A capacity and are available in European versions. With a footprint of only 3" x 1.75" the SD outlet will fit quietly in a corner of the control cabinet.

The EM-DUO family of outlets provides maximum usage of today's service outlets. Available in a wide array of variations, the EM-DUO will be able to meet the needs of most UL and non-UL panel shops.

The EM-DUO family is available for usage at the 15 A and 20 A levels as well as versions for 120 V ac and 250 V ac.

All SD and EM-DUO products are UL recognized to be used in any UL panel or system. This allows the user to quickly obtain UL recognized products versus purchasing non-recognized components and awaiting UL approval.

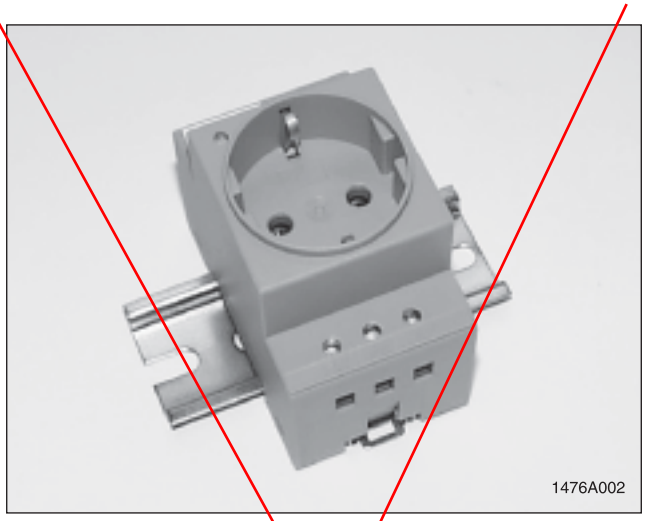

Figure 1. European Outlet

Single Outlet for use with European style plugs

European Version
Part Number: **29 64 89 8**
Description: **SD-D/SC/LA**

French Version
Part Number: **29 63 33 6**
Description: **SD-F/SC/LA**

Table 1. EM-DUO SD-US/SC/LA/GY Specifications

Technical Data	
Rated voltage	250 V ac
Rated current	16 A ac, 10 A dc
Wire size	#24-12 AWG
Housing Data	
Color	Green
Material	PVC 94 V-0
Minimum temperature	–20°C
Maximum temperature	+50°C

1476A003

DIN-Rail Mounted Service Outlets

SCC Item 54
Duplex Receptacle 120VAC With GFI
Phoenix Contact 5600462
Trojan P/N 914817 - Page 3/4

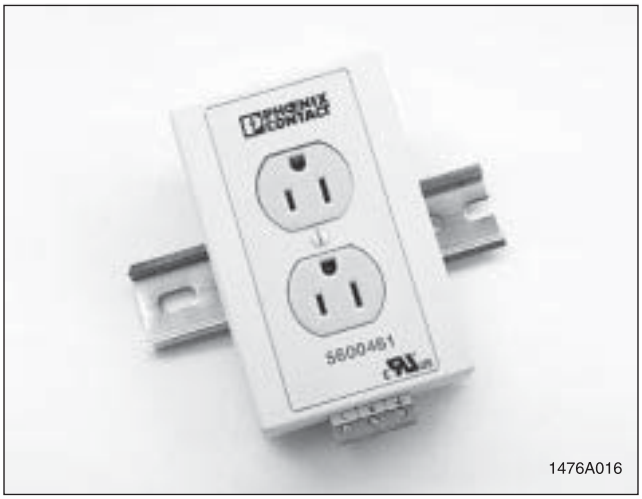

Figure 2. EM-DUO 120/15

Figure 3. EM-DUO 120/20

Dual Outlet for 120 V ac, 15 amp Service

Standard Dual Outlet
Part Number: **56 00 46 1**
Description: **EM-DUO-120/15**

Ground Fault Circuit Interruption (GFI)
Part Number: **56 00 46 2**
Description: **EM-DUO-120/15/GFI**

GFI Detection with Auxiliary Outputs
Part Number: **56 00 63 9**
Description: **EM-DUO-120/15/GFI/AUX**

Surge Protected Outlets
Part Number: **56 01 28 3**
Description: **EM-DUO-120/15/SPD**

Surge Protected with Auxiliary Outlets
Part Number: **56 04 06 3**
Description: **EM-DUO-120/15/SPD/AUX**

Table 2. EM-DUO 120/15 Specifications

Technical Data	
Rated voltage	125 V ac/dc
Rated current	15 A ac
Maximum wire size	#10 AWG
GFI response time	25 mS @ 4-6 mA
GFI units comply with UL943	
Surge Protection Data	
Rated voltage	120 V ac +10%-15%
Response time	>5 ηS
Protection mode	normal and common mode
Maximum surge current	13 kA (8 x 20 µs)
Protection level	@500 A, 340 V @3 kA, 490 V
Housing Data	
Color	Ivory
Material	PVC 94 V-0
Minimum temperature	–40°C (w/o impact)
Maximum temperature	+70°C

1476A005

Dual Outlet for 120 V ac, 20 amp Service

Standard Dual Outlet
Part Number: **56 00 52 5**
Description: **EM-DUO-120/20**

Ground Fault Circuit Interruption (GFI)
Part Number: **56 02 51 9**
Description: **EM-DUO-120/20/GFI**

GFI Detection with Auxiliary Outputs
Part Number: **56 03 04 9**
Description: **EM-DUO-120/20/GFI/AUX**

Faceless GFI (No Sockets)
Part Number: **56 02 19 2**
Description: **EM-DUO-120/20/GFI/AUX/NO**

Table 3. EM-DUO 120/20 Specifications

Technical Data	
Rated voltage	125 V ac/dc
Rated current	20 A ac
Maximum wire size	#10 AWG
GFI response time	25 mS @ 4-6 mA
GFI units comply with UL943	
Housing Data	
Color	Ivory
Material	PVC 94 V-0
Minimum temperature	–40°C (w/o impact)
Maximum temperature	+70°C

1476A007

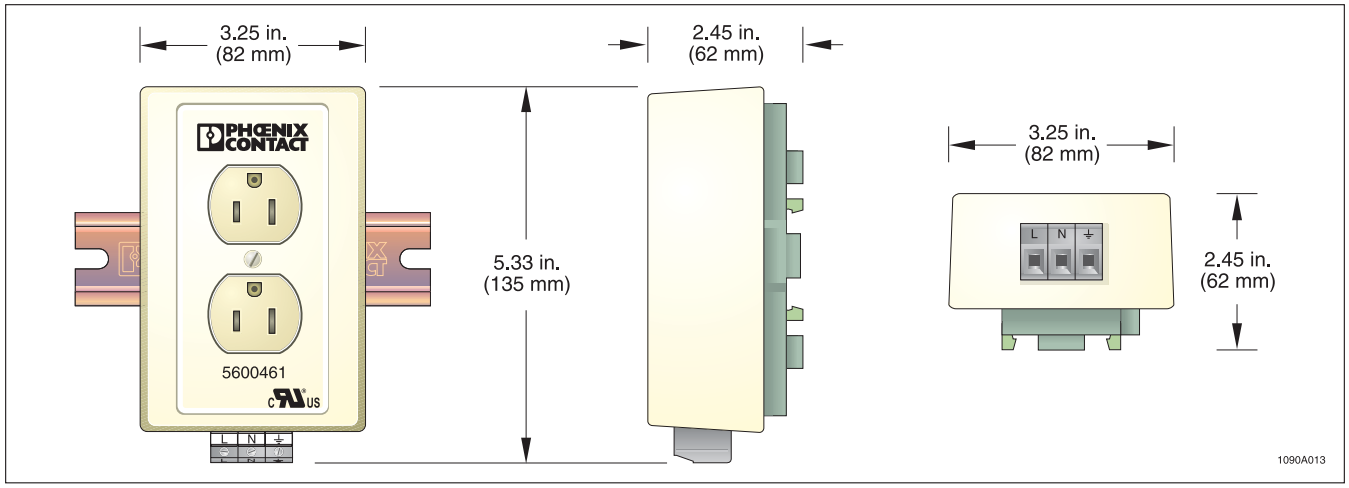

Figure 6. EM-DUO/120/15 Dimensional Diagram

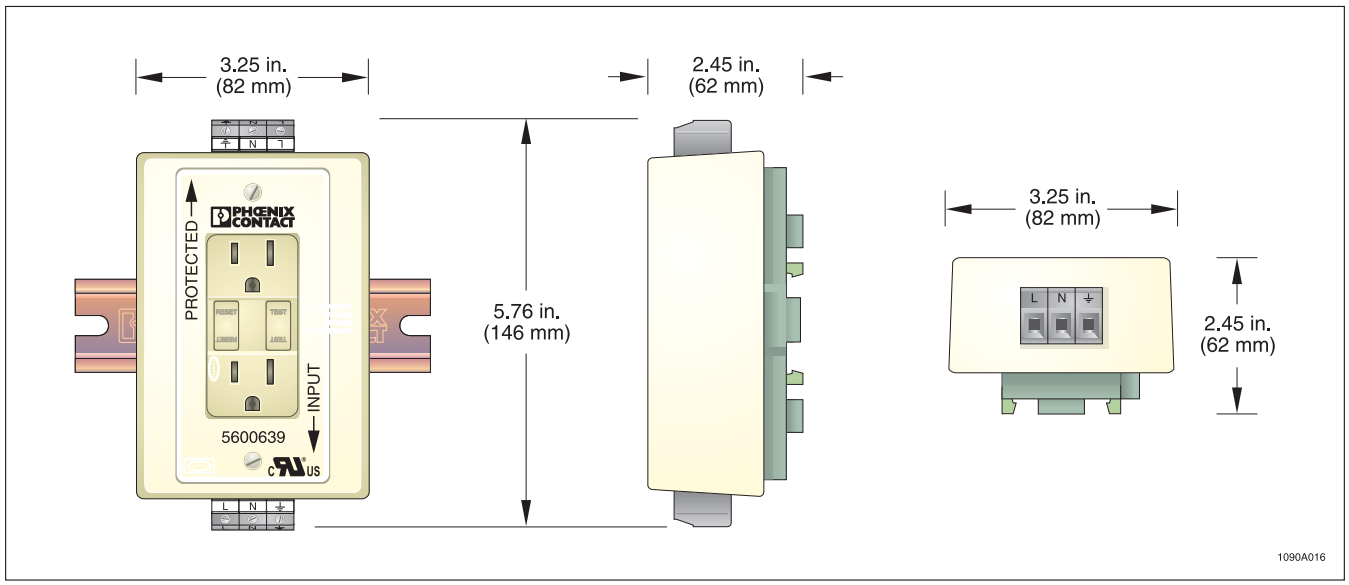

Figure 7. EM-DUO/120/15/GFI/AUX Dimensional Diagram

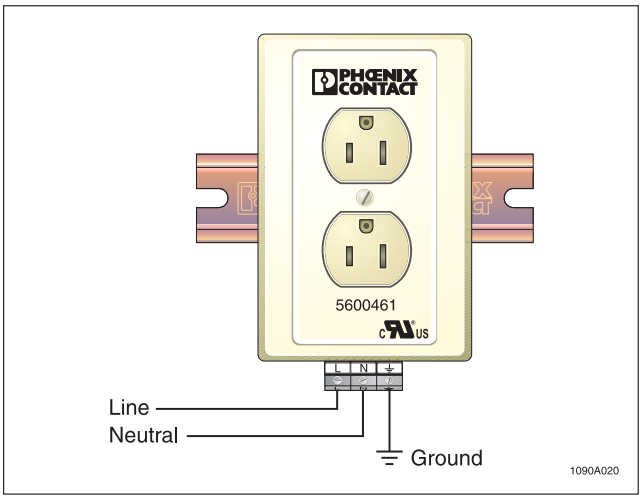

Figure 8. EM-DUO/120/15 Connection Diagram

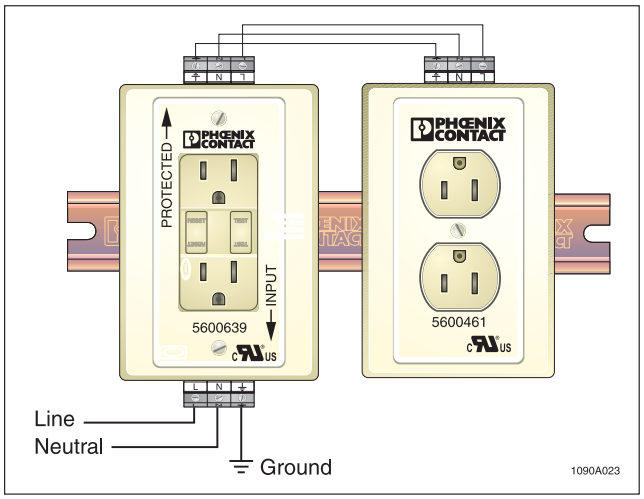

Figure 9. EM-DUO 120/15/GFI/AUX Connection Diagram

Industrial Ethernet Switch - FL SWITCH SFNB 5TX - 2891001

Please be informed that the data shown in this PDF Document is generated from our Online Catalog. Please find the complete data in the user's documentation. Our General Terms of Use for Downloads are valid (http://phoenixcontact.com/download)

Ethernet switch, 5 TP RJ45 ports, automatic detection of data transmission speed of 10 or 100 Mbps (RJ45), autocrossing function

Why buy this product

- Auto negotiation and autocrossing detection simplifies installation and setup
- Local diagnostic indicators with LEDs
- RJ45 ports support a transmission speed of 10/100 Mbps

Ethernet

Key Commercial Data

Packing unit	1 pc
GTIN	4 046356 457163
Weight per Piece (excluding packing)	303.5 GRM
Custom tariff number	85176200
Country of origin	Taiwan

Technical data

Note

Utilization restriction	EMC: class A product, see manufacturer's declaration in the download area

Dimensions

Width	28 mm
Height	110 mm
Depth	70 mm

Ambient conditions

Degree of protection	IP20
Ambient temperature (operation)	-10 °C ... 60 °C
Ambient temperature (storage/transport)	-20 °C ... 85 °C
Permissible humidity (operation)	5 % ... 95 % (non-condensing)
Permissible humidity (storage/transport)	5 % ... 95 % (non-condensing)

Industrial Ethernet Switch - FL SWITCH SFNB 5TX - 2891001

Technical data

Ambient conditions

Air pressure (operation)	86 kPa ... 108 kPa (up to 1500 m above mean sea level)
Air pressure (storage/transport)	66 kPa ... 108 kPa (up to 3500 m above mean sea level)
Noise immunity	EN 61000-6-2

Interfaces

Interface 1	Ethernet (RJ45)
No. of ports	5 (RJ45 ports)
Connection method	RJ45
Note on connection method	Auto negotiation and autocrossing
Transmission physics	Ethernet in RJ45 twisted pair
Transmission speed	10/100 MBit/s

Function

Basic functions	Unmanaged switch / auto negotiation, complies with IEEE 802.3, store and forward switching mode
Status and diagnostic indicators	LEDs: U_S, link and activity per port

Network expansion parameters

Cascading depth	Network, linear, and star structure: any
Maximum conductor length (twisted pair)	100 m

Supply voltage

Supply voltage	24 V DC
Residual ripple	3.6 V_{PP} (within the permitted voltage range)
Supply voltage range	12 V DC ... 48 V DC
Typical current consumption	185 mA (at U_S = 24 V DC)
Max. current consumption	345 mA (@12 V C)

General

Mounting type	DIN rail
Type AX	Block design
Net weight	291.6 g
Housing material	Aluminum
Noise emission	EN 61000-6-4

Conformity with EMC directives

Developed in acc. with standard	IEC 61000-6.2
Test standard	IEC 61000-4-2 (ESD)
Test result	Criterion B
Test standard	IEC 61000-4-3 (immunity to radiated interference)
Test result	Criterion A
Test standard	IEC 61000-4-4 (burst)
Test result	Criterion B
Test standard	IEC 61000-4-5 (surge)

Industrial Ethernet Switch - FL SWITCH SFNB 5TX - 2891001

Technical data

Conformity with EMC directives

Test result	Criterion B
Test standard	IEC 61000-4-6 (immunity to conducted interference)
Test result	Criterion A
Test standard	IEC 61000-4-8 (immunity to magnetic fields)
Test result	Criterion A
Test standard	EN 55022 (emitted interference)
Test result	Criterion A

Classifications

eCl@ss

eCl@ss 4.0	27250501
eCl@ss 4.1	27250501
eCl@ss 5.0	19030117
eCl@ss 5.1	19030117
eCl@ss 6.0	19170106
eCl@ss 7.0	19170106
eCl@ss 8.0	19170106

ETIM

ETIM 2.0	EC000734
ETIM 3.0	EC000734
ETIM 4.0	EC000734
ETIM 5.0	EC000734

UNSPSC

UNSPSC 6.01	43172901
UNSPSC 7.0901	43201404
UNSPSC 11	43172015
UNSPSC 12.01	43201410
UNSPSC 13.2	43201410

Approvals

Approvals

Approvals

UL Listed / cUL Listed / EAC / EAC / KC / cULus Listed

Ex Approvals

UL Listed / cUL Listed / cULus Listed

Industrial Ethernet Switch - FL SWITCH SFNB 5TX - 2891001

Approvals

Approvals submitted

Approval details

UL Listed

cUL Listed

EAC

EAC

KC

cULus Listed

Phoenix Contact 2015 © - all rights reserved
http://www.phoenixcontact.com

Hard-to-find made easy®

Data Sheet

3 ft Cat5e Blue Snagless Shielded RJ45 F/UTP Cat 5e Patch Cable - 3ft Patch Cord

Product ID: S45PATCH3BL

StarTech.com's Cat5e Shielded F/UTP Snagless Patch Cables offer reliable Ethernet connections. This 3ft cable meets or exceeds all Category 5e specifications and features a durable blue jacket that simplifies departmental color coding while providing rugged flexibility for network connections.

To reduce susceptibility to EMI/RFI and near end cross-talk, the patch cable is shielded throughout the length of the cable, as well as around the RJ45 connectors. Our Cat5e Shielded F/UTP Snagless Patch Cables also feature a snagless design that protects the RJ45 clip from snagging during installation, as well as PVC molded strain relief that prevents the RJ45 connector termination point from bending at sharp angles - reducing the risk of cable damage.

StarTech.com's Cat5e Shielded F/UTP Snagless Patch Cable is constructed of top quality materials (100% copper conductors, 24 Gauge Wire, 50 micron Gold Connectors) to ensure optimum durability and performance, and backed by our Lifetime Warranty.

Certifications, Reports and Compatibility

RoHS & REACH DOWNLOAD DECLARATION

Applications

- Designed for Network Adapters, Hubs, Switches, Routers, DSL/Cable Modems and other applications requiring high-speed cables
- Works with 1000 BASE-T, 100 BASE-T, 10 BASE-T, Token Ring, ATM & ISDN networks
- Suited for industrial applications

Features

- StarTech.com Category 5e shielded cables are manufactured to meet or exceed CAT5e specifications
- Molded strain relief and stranded wires for added flexibility and durability
- Colored Hoods for departmental color coding and easy identification

	Warranty	Lifetime
Hardware	Cable Jacket Type	PVC - Polyvinyl Chloride
	Cable Type	Shielded Snag-less
	Fire Rating	CMG Rated (General Purpose)
	Number of Conductors	4 pair F/UTP
Performance	Cable Rating	CAT5e - 350 MHz
Connector(s)	Connector A	1 - RJ-45 Male
	Connector B	1 - RJ-45 Male
Physical Characteristics	Cable Length	3 ft [0.9 m]
	Color	Blue
	Product Length	3 ft [0.9 m]
	Weight of Product	1.8 oz [51 g]
	Wire Gauge	24 AWG
Packaging Information	Package Height	9.5 in [24.2 cm]
	Package Length	8 in [20.2 cm]
	Package Width	0.2 in [6.2 mm]
	Shipping (Package) Weight	1.8 oz [51 g]

Product appearance and specifications are subject to change without notice.

Hard-to-find made easy®

Data Sheet

6 ft Cat5e Blue Snagless Shielded RJ45 F/UTP Cat 5e Patch Cable - 6ft Patch Cord

Product ID: S45PATCH6BL

StarTech.com's Cat5e Shielded F/UTP Snagless Patch Cables offer reliable Ethernet connections. This 6ft cable meets or exceeds all Category 5e specifications and features a durable blue jacket that simplifies departmental color coding while providing rugged flexibility for network connections.

To reduce susceptibility to EMI/RFI and near end cross-talk, the patch cable is shielded throughout the length of the cable, as well as around the RJ45 connectors. Our Cat5e Shielded F/UTP Snagless Patch Cables also feature a snagless design that protects the RJ45 clip from snagging during installation, as well as PVC molded strain relief that prevents the RJ45 connector termination point from bending at sharp angles - reducing the risk of cable damage.

StarTech.com's Cat5e Shielded F/UTP Snagless Patch Cable is constructed of top quality materials (100% copper conductors, 24 Gauge Wire, 50 micron Gold Connectors) to ensure optimum durability and performance, and backed by our Lifetime Warranty.

Certifications, Reports and Compatibility

RoHS & REACH DOWNLOAD DECLARATION

Applications

- Designed for Network Adapters, Hubs, Switches, Routers, DSL/Cable Modems and other applications requiring high-speed cables
- Works with 1000 BASE-T, 100 BASE-T, 10 BASE-T, Token Ring, ATM & ISDN networks
- Suited for industrial applications

Features

- StarTech.com Category 5e shielded cables are manufactured to meet or exceed CAT5e specifications
- Molded strain relief and stranded wires for added flexibility and durability
- Colored Hoods for departmental color coding and easy identification

	Warranty	Lifetime
Hardware	Cable Jacket Type	PVC - Polyvinyl Chloride
	Cable Type	Shielded Snag-less
	Fire Rating	CMG Rated (General Purpose)
	Number of Conductors	4 pair F/UTP
Performance	Cable Rating	CAT5e - 350 MHz
Connector(s)	Connector A	1 - RJ-45 Male
	Connector B	1 - RJ-45 Male
Physical Characteristics	Cable Length	6 ft [1.8 m]
	Color	Blue
	Product Length	6 ft [1.8 m]
	Weight of Product	2.8 oz [78 g]
	Wire Gauge	24 AWG
Packaging Information	Package Height	0.7 in [18 mm]
	Package Length	8.7 in [22 cm]
	Package Width	7.9 in [20 cm]
	Shipping (Package) Weight	3 oz [86 g]

Product appearance and specifications are subject to change without notice.

Spec Sheet

3 ft Cat5e Blue Snagless Shielded RJ45 F/UTP Cat 5e Patch Cable - 3ft Patch Cord

StarTech ID: S45PATCH3

StarTech.com's Cat5e Shielded F/UTP Snagless Patch Cables offer reliable Ethernet connections. This 3ft cable meets or exceeds all Category 5e specifications and features a durable blue jacket that simplifies departmental color coding while providing rugged flexibility for network connections.

To reduce susceptibility to EMI/RFI and near end cross-talk, the patch cable is shielded throughout the length of the cable, as well as around the RJ45 connectors. Our Cat5e Shielded F/UTP Snagless Patch Cables also feature a snagless design that protects the RJ45 clip from snagging during installation, as well as PVC molded strain relief that prevents the RJ45 connector termination point from bending at sharp angles - reducing the risk of cable damage.

StarTech.com's Cat5e Shielded F/UTP Snagless Patch Cable is constructed of top quality materials (100% copper conductors, 24 Gauge Wire, 50 micron Gold Connectors) to ensure optimum durability and performance, and backed by our Lifetime Warranty.

Applications

- Designed for Network Adapters, Hubs, Switches, Routers, DSL/Cable Modems and other applications requiring high-speed cables
- Works with 1000 BASE-T, 100 BASE-T, 10 BASE-T, Token Ring, ATM & ISDN networks
- Suited for industrial applications

Features

- StarTech.com Category 5e shielded cables are manufactured to meet or exceed CAT5e specifications
- Molded strain relief and stranded wires for added flexibility and durability
- Colored Hoods for departmental color coding and easy identification

Hard-to-find made easy®

Spec Sheet

Technical Specifications

Warranty	Lifetime
Number of Conductors	4 pair STP
Cable Jacket Type	PVC - Polyvinyl Chloride
Fire Rating	CMG Rated (General Purpose)
Cable Type	Shielded Snag-less
Connector A	1 - RJ-45 Male
Connector B	1 - RJ-45 Male
Cable Rating	CAT5e - 350 MHz
Color	Blue
Wire Gauge	24 AWG
Cable Length	3 ft [0.9 m]
Product Length	3 ft [0.9 m]
Shipping (Package) Weight	0.1 lb [0.1 kg]

Certifications, Reports and Compatibility

RoHS Compliant Available

Extract from the online catalog

NS 35/ 7,5 PERF 2000MM

Order No.: 0801733

http://eshop.phoenixcontact.ca/phoenix/treeViewClick.do?UID=0801733

DIN rail, material: steel galvanized and passivated with a thick layer, perforated, height 7.5 mm, width 35 mm, length: 2000 mm

Commercial data	
EAN	4 017918 006686
Pack	2 m
Customs tariff	72287010
Catalog page information	Page 341 (CL2-2011)

Product notes

WEEE/RoHS-compliant since: Jan/13/2006

Please note that the data given here has been taken from the online catalog. For comprehensive information and data, please refer to the user documentation at http://www.download.phoenixcontact.com. The General Terms and Conditions of Use apply to Internet downloads.

Technical data

General data

Height	7.5 mm
Length	2000 mm
Width	35 mm
Material	Steel
Coating	Galvanized, passivated with a thick layer
Color	silver
Test standard	In acc. with EN 60715: 2001

NS 35/ 7,5 PERF 2000MM Order No.: 0801733
http://eshop.phoenixcontact.ca/phoenix/treeViewClick.do?UID=0801733

Drawings

Dimensioned drawing

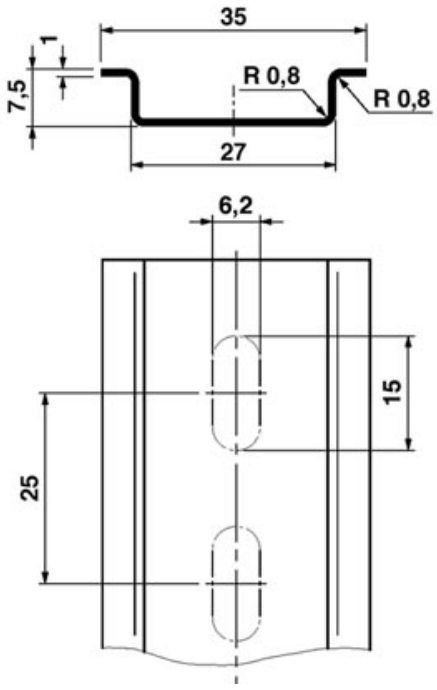

End clamp - CLIPFIX 35-5 - 3022276

Please be informed that the data shown in this PDF Document is generated from our Online Catalog. Please find the complete data in the user's documentation. Our General Terms of Use for Downloads are valid (http://phoenixcontact.com/download)

Quick mounting end clamp for NS 35/7,5 DIN rail or NS 35/15 DIN rail, with marking option, with parking option for FBS...5, FBS...6, KSS 5, KSS 6, width: 5.15 mm, color: gray

Why buy this product

- Phoenix Contact has engineered its CLIPFIX end brackets to maintain a secure grip on the various DIN rail systems
- Design width of just 5.2 mm
- Parking option for bridges and plugs
- Large-surface labeling

Key Commercial Data

Packing unit	50 STK
Minimum order quantity	50 STK
GTIN	4 017918 194154
Weight per Piece (excluding packing)	5.13 g
Custom tariff number	39269099
Country of origin	Germany

Technical data

Dimensions

Height	35 mm
Length	48.5 mm
Width	5.15 mm

General

Material	PA
Color	gray

Standards and Regulations

Flammability rating according to UL 94	V2

End clamp - CLIPFIX 35-5 - 3022276

Classifications

eCl@ss

eCl@ss 4.0	27141199
eCl@ss 4.1	27141199
eCl@ss 5.0	27141135
eCl@ss 5.1	27141135
eCl@ss 6.0	27141135
eCl@ss 7.0	27141135
eCl@ss 8.0	27141135
eCl@ss 9.0	27141135

ETIM

ETIM 2.0	EC000761
ETIM 3.0	EC001041
ETIM 4.0	EC001041
ETIM 5.0	EC001041

UNSPSC

UNSPSC 6.01	30212109
UNSPSC 7.0901	39121708
UNSPSC 11	39121708
UNSPSC 12.01	39121708
UNSPSC 13.2	39121708

Phoenix Contact 2016 © - all rights reserved
http://www.phoenixcontact.com

Zack marker strip - ZB 5 :BLANK - 1050004

Please be informed that the data shown in this PDF Document is generated from our Online Catalog. Please find the complete data in the user's documentation. Our General Terms of Use for Downloads are valid (http://phoenixcontact.com/download)

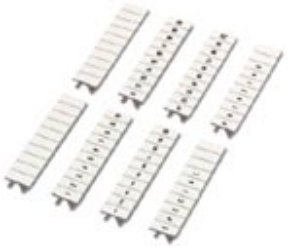

The illustration shows the variants of the ZB 5

Zack marker strip, Strip, white, unlabeled, can be labeled with: Plotter, Mounting type: Snap into tall marker groove, for terminal block width: 5.2 mm, Lettering field: 5.1 x 10.5 mm

Why buy this product

- Other pitches available on request
- Labeling service: Phoenix Contact can custom-label all zack marker strip markers according to your requirements
- The multi-section marking strips are easy to fit and can be easily separated if required
- The ZB zack marker strip system is a marking solution for modular terminal blocks and electronics modules with tall marker grooves
- Unlabeled marking strips can be custom-labeled with a plotter or by hand

Key Commercial Data

Packing unit	10 STK
Minimum order quantity	10 STK
GTIN	4 017918 015473
Weight per Piece (excluding packing)	1.3 g
Custom tariff number	39209200
Country of origin	Germany

Technical data

Dimensions

Width (a)	5 mm

Ambient conditions

Ambient temperature (operation)	-40 °C ... 100 °C

General

Note	Can be labeled with CMS
Color	white
Components	free from silicone and halogen
Flammability rating according to UL 94	V2
Material	PA
Wipe resistance	DIN EN 61010-1 (VDE 0411-1)

Zack marker strip - ZB 5 :BLANK - 1050004

Technical data

General

	DIN VDE 0611
Number of individual labels	10
Number of individual labels per row	10
Number of marker strips	10
Marking mounting type	Snap into tall marker groove

Standards and Regulations

Wipe resistance	DIN EN 61010-1 (VDE 0411-1)
	DIN VDE 0611
Flammability rating according to UL 94	V2

Classifications

eCl@ss

eCl@ss 4.0	24190208
eCl@ss 4.1	24190208
eCl@ss 5.0	27149103
eCl@ss 5.1	27141137
eCl@ss 6.0	27141137
eCl@ss 7.0	27141137
eCl@ss 8.0	27141137
eCl@ss 9.0	27141137

ETIM

ETIM 2.0	EC000761
ETIM 3.0	EC000761
ETIM 4.0	EC000761
ETIM 5.0	EC000761

UNSPSC

UNSPSC 6.01	30211811
UNSPSC 7.0901	39121410
UNSPSC 11	39121410
UNSPSC 12.01	39121410
UNSPSC 13.2	39121410

Phoenix Contact 2016 © - all rights reserved
http://www.phoenixcontact.com

End cover - D-ST 2,5-QUATTRO - 3030514

Please be informed that the data shown in this PDF Document is generated from our Online Catalog. Please find the complete data in the user's documentation. Our General Terms of Use for Downloads are valid (http://phoenixcontact.com/download)

End cover, Length: 72 mm, Width: 2.2 mm, Height: 36.5 mm, Color: gray

RoHS

Key Commercial Data

Packing unit	1 STK
GTIN	4 017918 187972
GTIN	4017918187972
Weight per Piece (excluding packing)	2.800 g
Custom tariff number	85389060
Country of origin	Germany

Technical data

Environmental Product Compliance

China RoHS	No hazardous substances above threshold values

General

Color	gray
Material	PA
Flammability rating according to UL 94	V0

Dimensions

Width	2.2 mm
Length	72 mm
Height	36.5 mm

General

Relative insulation material temperature index (Elec., UL 746 B)	130 °C
Temperature index of insulation material (DIN EN 60216-1 (VDE 0304-21))	125 °C
Static insulating material application in cold	-60 °C

End cover - D-ST 2,5-QUATTRO - 3030514

Technical data

General

Behavior in fire for rail vehicles (DIN 5510-2)	Test passed
Flame test method (DIN EN 60695-11-10)	V0
Oxygen index (DIN EN ISO 4589-2)	>32 %
NF F16-101, NF F10-102 Class I	2
NF F16-101, NF F10-102 Class F	2
Surface flammability NFPA 130 (ASTM E 162)	passed
Specific optical density of smoke NFPA 130 (ASTM E 662)	passed
Smoke gas toxicity NFPA 130 (SMP 800C)	passed
Calorimetric heat release NFPA 130 (ASTM E 1354)	27,5 MJ/kg
Fire protection for rail vehicles (DIN EN 45545-2) R22	HL 1 - HL 3
Fire protection for rail vehicles (DIN EN 45545-2) R23	HL 1 - HL 3
Fire protection for rail vehicles (DIN EN 45545-2) R24	HL 1 - HL 3
Fire protection for rail vehicles (DIN EN 45545-2) R26	HL 1 - HL 3

Standards and Regulations

Flammability rating according to UL 94	V0

Classifications

eCl@ss

eCl@ss 4.0	27141111
eCl@ss 4.1	27141111
eCl@ss 5.0	27141133
eCl@ss 5.1	27141133
eCl@ss 6.0	27141133
eCl@ss 7.0	27141133
eCl@ss 8.0	27141133
eCl@ss 9.0	27141133

ETIM

ETIM 2.0	EC000886
ETIM 3.0	EC000886
ETIM 4.0	EC000886
ETIM 5.0	EC000886

UNSPSC

UNSPSC 6.01	30211827
UNSPSC 7.0901	39121424
UNSPSC 11	39121424
UNSPSC 12.01	39121424
UNSPSC 13.2	39121424

FBS ... plug-in bridges

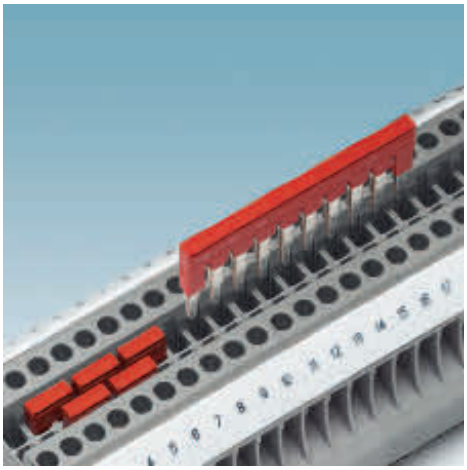

Plug-in bridge, red

– To allow individual potential distribution, the terminal blocks of the CLIPLINE complete system have two bridge shafts
– The 2- to 50-pos. bridges can bridge up to 50 terminal blocks in one step in these bridge shafts

Designation of bridges

– The last digit in the bridge designation indicates the dimension of the terminal width. An FBS ...-4 bridge can be used with CLIPLINE complete terminal blocks with the terminal width of 4.2 mm, and an FBS ...-6 bridge can be used with terminal blocks with a terminal width of 6.2 mm.

Vertical potential bridge

– Potential bridge to connect the upper and the lower levels of a double-level terminal block
– The bridge can be connected later through the bridge shaft of the upper level to the lower level
– The FBS-PV UT vertical bridge can be used with the UTTB 2,5 and UTTB 4.
– The FBS-PV vertical bridge can be used with the STTBS 2,5, STTBS 4, PITTB 2,5, PITTB 4, PITTBS 2,5, QTTCB 1,5 and STTB 2,5/4P
– The FBS 1,5/S-PV vertical bridge can be used with the PITTB 1,5/S, PIT 1,5/S-3L and PIT 1,5/S-PE/L/L

Ordering data

Description	No. of pos.	Type	Order No.	Pcs./ Pkt.
Plug-in bridge				
	2	FBS 2-3,5	3213014	50
	3	FBS 3-3,5	3213027	50
	4	FBS 4-3,5	3213030	50
	5	FBS 5-3,5	3213043	50
	10	FBS 10-3,5	3213056	50
	20	FBS 20-3,5	3213069	50
Plug-in bridge				
	2	FBS 2-4	3030116	50
	3	FBS 3-4	3030129	50
	4	FBS 4-4	3030132	50
	5	FBS 5-4	3030145	50
	10	FBS 10-4	3030158	10
	20	FBS 20-4	3030352	10
Plug-in bridge				
	2	FBS 2-5	3030161	50
	3	FBS 3-5	3030174	50
	4	FBS 4-5	3030187	50
	5	FBS 5-5	3030190	50
	10	FBS 10-5	3030213	10
	20	FBS 20-5	3030226	10
	50	FBS 50-5	3038930	10
Plug-in bridge				
	2	FBS 2-6	3030336	50
	3	FBS 3-6	3030242	50
	4	FBS 4-6	3030255	50
	5	FBS 5-6	3030349	50
	10	FBS 10-6	3030271	10
	20	FBS 20-6	3030365	10
	50	FBS 50-6	3032224	10
Plug-in bridge				
	2	FBS 2-8	3030284	10
	3	FBS 3-8	3030297	10
	4	FBS 4-8	3030307	10
	5	FBS 5-8	3030310	10
	6	FBS 6-8	3032470	10
	10	FBS 10-8	3030323	10
Plug-in bridge				
	2	FBS 2-10	3005947	10
Plug-in bridge				
	2	FBS 2-12	3005950	10
Plug-in bridge				
	2	FBS 2-16	3005963	10
Pre-assembled bridge, labeled				
3-pos., positions 1, 3	2	FBS 1/3-8	3032363	10
4-pos., positions 1, 4	2	FBS 1/4-8	3032376	10
5-pos., positions 1, 3, 5	3	FBS 1/3/5-8	3032389	10
10-pos. positions 1, 4, 7, 10	4	FBS 1/4/7/10-8	3032402	10
Vertical potential bridge, to connect the upper and lower level				

Plug-in bridge, blue

Plug-in bridge, gray

Vertical potential bridge to connect two levels of multi-level terminal blocks

Ordering data

Type	Order No.	Pcs./ Pkt.
FBS 2-3,5 BU	3213086	50
FBS 3-3,5 BU	3213099	50
FBS 4-3,5 BU	3213109	50
FBS 5-3,5 BU	3213112	50
FBS 10-3,5 BU	3213125	50
FBS 20-3,5 BU	3213138	50
FBS 2-5 BU	3036877	50
FBS 3-5 BU	3036880	50
FBS 4-5 BU	3036893	50
FBS 5-5 BU	3036903	50
FBS 10-5 BU	3036916	10
FBS 20-5 BU	3036929	10
FBS 50-5 BU	3032114	10
FBS 2-6 BU	3036932	50
FBS 3-6 BU	3036945	50
FBS 4-6 BU	3036958	50
FBS 5-6 BU	3036961	50
FBS 10-6 BU	3032198	10
FBS 20-6 BU	3032208	10
FBS 50-6 BU	3032211	10
FBS 2-8 BU	3032567	10
FBS 3-8 BU	3032570	10
FBS 4-8 BU	3032583	10
FBS 5-8 BU	3032596	10
FBS 6-8 BU	3032677	10
FBS 10-8 BU	3032606	10

Ordering data

Type	Order No.	Pcs./ Pkt.
FBS 2-3,5 GY	3213153	50
FBS 3-3,5 GY	3213167	50
FBS 4-3,5 GY	3213180	50
FBS 5-3,5 GY	3213183	50
FBS 10-3,5 GY	3213196	50
FBS 20-3,5 GY	3213206	50
FBS 2-5 GY	3038969	50
FBS 3-5 GY	3038972	50
FBS 4-5 GY	3038985	50
FBS 5-5 GY	3038998	50
FBS 10-5 GY	3039007	10
FBS 20-5 GY	3038671	10
FBS 50-5 GY	3032127	10
FBS 2-6 GY	3032237	50
FBS 3-6 GY	3032240	50
FBS 4-6 GY	3032279	50
FBS 5-6 GY	3032266	50
FBS 10-6 GY	3032253	10
FBS 2-8 GY	3032621	10
FBS 3-8 GY	3032622	10
FBS 4-8 GY	3032635	10
FBS 5-8 GY	3032648	10
FBS 6-8 GY	3032664	10
FBS 10-8 GY	3032651	10

Ordering data

Type	Order No.	Pcs./ Pkt.
FBS-PV UT	3047358	50
FBS-PV	3032185	50
FBS 1,5/S-PV	3216263	10

Feed-through terminal block - PT 2,5-QUATTRO BU - 3209581

Please be informed that the data shown in this PDF Document is generated from our Online Catalog. Please find the complete data in the user's documentation. Our General Terms of Use for Downloads are valid (http://phoenixcontact.com/download)

Feed-through terminal block, Connection method: Push-in connection, Cross section: 0.14 mm² - 4 mm², AWG: 26 - 12, Width: 5.2 mm, Height: 35.3 mm, Color: blue, Mounting type: NS 35/7,5, NS 35/15

Why buy this product

- The Push-in connection terminal blocks are characterized by the system features of the CLIPLINE complete system and by easy and tool-free wiring of conductors with ferrules or solid conductors
- The compact design and front connection enable wiring in a confined space
- In addition to the testing facility in the double function shaft, all terminal blocks provide an additional test connection
- Tested for railway applications

Key Commercial Data

Packing unit	50 STK
Weight per Piece (excluding packing)	10.65 g
Custom tariff number	85369040
Country of origin	Germany

Technical data

General

Number of levels	1
Number of connections	4
Potentials	1
Nominal cross section	2.5 mm²
Color	blue
Insulating material	PA
Flammability rating according to UL 94	V0
Area of application	Railway industry
	Machine building
	Plant engineering
	Process industry

Feed-through terminal block - PT 2,5-QUATTRO BU - 3209581

Technical data

General

Rated surge voltage	8 kV
Degree of pollution	3
Overvoltage category	III
Insulating material group	I
Maximum load current	28 A (In case of a 4 mm² conductor cross section, the maximum load current must not be exceeded by the total current of all connected conductors.)
Nominal current I_N	24 A (with 2.5 mm² conductor connection cross section)
Nominal voltage U_N	800 V
Open side panel	Yes

Dimensions

Width	5.2 mm
End cover width	2.2 mm
Length	72.2 mm
Height	35.3 mm
Height NS 35/7,5	36.8 mm
Height NS 35/15	44.3 mm

Connection data

Connection method	Push-in connection
Connection in acc. with standard	IEC 60947-7-1
Conductor cross section solid min.	0.14 mm²
Conductor cross section solid max.	4 mm²
Conductor cross section AWG min.	26
Conductor cross section AWG max.	12
Conductor cross section flexible min.	0.14 mm²
Conductor cross section flexible max.	2.5 mm²
Min. AWG conductor cross section, flexible	26
Max. AWG conductor cross section, flexible	14
Conductor cross section flexible, with ferrule without plastic sleeve min.	0.14 mm²
Conductor cross section flexible, with ferrule without plastic sleeve max.	2.5 mm²
Conductor cross section flexible, with ferrule with plastic sleeve min.	0.14 mm²
Conductor cross section flexible, with ferrule with plastic sleeve max.	2.5 mm²
2 conductors with same cross section, stranded, TWIN ferrules with plastic sleeve, max.	0.5 mm²
Conductor cross section AWG min.	26
Conductor cross section AWG max.	12
Stripping length	8 mm ... 10 mm
Internal cylindrical gage	A3

Standards and Regulations

Connection in acc. with standard	CSA

Feed-through terminal block - PT 2,5-QUATTRO BU - 3209581

Technical data

Standards and Regulations

	IEC 60947-7-1
Flammability rating according to UL 94	V0

Classifications

eCl@ss

eCl@ss 4.0	27141121
eCl@ss 4.1	27141121
eCl@ss 5.0	27141120
eCl@ss 5.1	27141120
eCl@ss 6.0	27141120
eCl@ss 7.0	27141120
eCl@ss 8.0	27141120
eCl@ss 9.0	27141120

ETIM

ETIM 2.0	EC000897
ETIM 3.0	EC000897
ETIM 4.0	EC000897
ETIM 5.0	EC000897

UNSPSC

UNSPSC 6.01	30211811
UNSPSC 7.0901	39121410
UNSPSC 11	39121410
UNSPSC 12.01	39121410
UNSPSC 13.2	39121410

Approvals

Approvals

Approvals

CSA / UL Recognized / VDE Zeichengenehmigung / cUL Recognized / RS / ABS / NK / IECEE CB Scheme / BV / EAC / NK / EAC / DNV GL / cULus Recognized

Ex Approvals

ATEX / IECEx / EAC Ex

Approvals submitted

Feed-through terminal block - PT 2,5-QUATTRO BU - 3209581

Approvals

Approval details

CSA

	B	C
mm²/AWG/kcmil	26-12	26-12
Nominal current IN	20 A	20 A
Nominal voltage UN	600 V	600 V

UL Recognized

	B	C
mm²/AWG/kcmil	26-12	26-12
Nominal current IN	20 A	20 A
Nominal voltage UN	600 V	600 V

VDE Zeichengenehmigung

mm²/AWG/kcmil	0.2-2.5
Nominal current IN	24 A
Nominal voltage UN	800 V

cUL Recognized

	B	C
mm²/AWG/kcmil	26-12	26-12
Nominal current IN	20 A	20 A
Nominal voltage UN	600 V	600 V

RS

ABS

NK

Feed-through terminal block - PT 2,5-QUATTRO BU - 3209581

Approvals

IECEE CB Scheme

mm²/AWG/kcmil	0.2-2.5
Nominal voltage UN	800 V

BV

EAC

NK

EAC

DNV GL

cULus Recognized

Phoenix Contact 2016 © - all rights reserved
http://www.phoenixcontact.com

Feed-through terminal block - PT 2,5-QUATTRO - 3209578

Please be informed that the data shown in this PDF Document is generated from our Online Catalog. Please find the complete data in the user's documentation. Our General Terms of Use for Downloads are valid (http://phoenixcontact.com/download)

Feed-through terminal block, Connection method: Push-in connection, Cross section: 0.14 mm² - 4 mm², AWG: 26 - 12, Width: 5.2 mm, Height: 35.3 mm, Color: gray, Mounting type: NS 35/7,5, NS 35/15

Why buy this product

- The Push-in connection terminal blocks are characterized by the system features of the CLIPLINE complete system and by easy and tool-free wiring of conductors with ferrules or solid conductors
- The compact design and front connection enable wiring in a confined space
- In addition to the testing facility in the double function shaft, all terminal blocks provide an additional test connection
- Tested for railway applications

Key Commercial Data

Packing unit	50 STK
Weight per Piece (excluding packing)	10.6 g
Custom tariff number	85369040
Country of origin	Germany

Technical data

General

Number of levels	1
Number of connections	4
Potentials	1
Nominal cross section	2.5 mm²
Color	gray
Insulating material	PA
Flammability rating according to UL 94	V0
Area of application	Railway industry
	Machine building
	Plant engineering
	Process industry

Feed-through terminal block - PT 2,5-QUATTRO - 3209578

Technical data

General

Rated surge voltage	8 kV
Degree of pollution	3
Overvoltage category	III
Insulating material group	I
Maximum load current	28 A (In case of a 4 mm² conductor cross section, the maximum load current must not be exceeded by the total current of all connected conductors.)
Nominal current I_N	24 A (with 2.5 mm² conductor connection cross section)
Nominal voltage U_N	800 V
Open side panel	Yes
Shock protection test specification	DIN EN 50274 (VDE 0660-514):2002-11
Back of the hand protection	guaranteed
Finger protection	guaranteed
Result of surge voltage test	Test passed
Surge voltage test setpoint	9.8 kV
Result of power-frequency withstand voltage test	Test passed
Power frequency withstand voltage setpoint	2 kV
Result of the test for mechanical stability of terminal points (5 x conductor connection)	Test passed
Result of bending test	Test passed
Bending test rotation speed	10 rpm
Bending test turns	135
Bending test conductor cross section/weight	0.14 mm² / 0.2 kg
	2.5 mm² / 0.7 kg
	4 mm² / 0.9 kg
Tensile test result	Test passed
Conductor cross section tensile test	0.14 mm²
Tractive force setpoint	10 N
Conductor cross section tensile test	2.5 mm²
Tractive force setpoint	50 N
Conductor cross section tensile test	4 mm²
Tractive force setpoint	60 N
Result of tight fit on support	Test passed
Tight fit on carrier	NS 35
Setpoint	1 N
Result of voltage-drop test	Test passed
Requirements, voltage drop	≤ 3.2 mV
Result of temperature-rise test	Test passed
Short circuit stability result	Test passed
Conductor cross section short circuit testing	2.5 mm²
Short-time current	0.3 kA

Feed-through terminal block - PT 2,5-QUATTRO - 3209578

Technical data

General

Conductor cross section short circuit testing	4 mm²
Short-time current	0.48 kA
Result of aging test	Test passed
Ageing test for screwless modular terminal block temperature cycles	192
Result of thermal test	Test passed
Proof of thermal characteristics (needle flame) effective duration	30 s
Oscillation, broadband noise test result	Test passed
Test specification, oscillation, broadband noise	DIN EN 50155 (VDE 0115-200):2008-03
Test spectrum	Service life test category 2, bogie mounted
Test frequency	f_1 = 5 Hz to f_2 = 250 Hz
ASD level	6.12 $(m/s^2)^2$/Hz
Acceleration	3.12 g
Test duration per axis	5 h
Test directions	X-, Y- and Z-axis
Shock test result	Test passed
Test specification, shock test	DIN EN 50155 (VDE 0115-200):2008-03
Shock form	Half-sine
Acceleration	30g
Shock duration	18 ms
Number of shocks per direction	3
Test directions	X-, Y- and Z-axis (pos. and neg.)
Relative insulation material temperature index (Elec., UL 746 B)	130 °C
Temperature index of insulation material (DIN EN 60216-1 (VDE 0304-21))	125 °C
Static insulating material application in cold	-60 °C
Flame test method (DIN EN 60695-11-10)	V0
Oxygen index (DIN EN ISO 4589-2)	>32 %
	2
	passed
	passed
	passed
	28 MJ/kg
	HL 1 - HL 3
	HL 1 - HL 3
	HL 1 - HL 3
	HL 1 - HL 3

Dimensions

Width	5.2 mm
End cover width	2.2 mm
Length	72.2 mm

Feed-through terminal block - PT 2,5-QUATTRO - 3209578

Technical data

Dimensions

Height	35.3 mm
Height NS 35/7,5	36.8 mm
Height NS 35/15	44.3 mm

Connection data

Connection method	Push-in connection
Connection in acc. with standard	IEC 60947-7-1
Conductor cross section solid min.	0.14 mm²
Conductor cross section solid max.	4 mm²
Conductor cross section AWG min.	26
Conductor cross section AWG max.	12
Conductor cross section flexible min.	0.14 mm²
Conductor cross section flexible max.	2.5 mm²
Min. AWG conductor cross section, flexible	26
Max. AWG conductor cross section, flexible	14
Conductor cross section flexible, with ferrule without plastic sleeve min.	0.14 mm²
Conductor cross section flexible, with ferrule without plastic sleeve max.	2.5 mm²
Conductor cross section flexible, with ferrule with plastic sleeve min.	0.14 mm²
Conductor cross section flexible, with ferrule with plastic sleeve max.	2.5 mm²
2 conductors with same cross section, stranded, TWIN ferrules with plastic sleeve, max.	0.5 mm²
Conductor cross section AWG min.	26
Conductor cross section AWG max.	12
Stripping length	8 mm ... 10 mm
Internal cylindrical gage	A3

Standards and Regulations

Connection in acc. with standard	CSA
	IEC 60947-7-1
Flammability rating according to UL 94	V0

Classifications

eCl@ss

eCl@ss 4.0	27141121
eCl@ss 4.1	27141121
eCl@ss 5.0	27141120
eCl@ss 5.1	27141120
eCl@ss 6.0	27141120
eCl@ss 7.0	27141120
eCl@ss 8.0	27141120
eCl@ss 9.0	27141120

Feed-through terminal block - PT 2,5-QUATTRO - 3209578

Classifications

ETIM

ETIM 2.0	EC000897
ETIM 3.0	EC000897
ETIM 4.0	EC000897
ETIM 5.0	EC000897

UNSPSC

UNSPSC 6.01	30211811
UNSPSC 7.0901	39121410
UNSPSC 11	39121410
UNSPSC 12.01	39121410
UNSPSC 13.2	39121410

Approvals

Approvals

Approvals

CSA / UL Recognized / VDE Zeichengenehmigung / cUL Recognized / RS / ABS / NK / IECEE CB Scheme / BV / EAC / NK / EAC / DNV GL / cULus Recognized

Ex Approvals

ATEX / IECEx / EAC Ex

Approvals submitted

Approval details

CSA

	B	C
mm²/AWG/kcmil	26-12	26-12
Nominal current IN	20 A	20 A
Nominal voltage UN	600 V	600 V

UL Recognized

	B	C
mm²/AWG/kcmil	26-12	26-12

Feed-through terminal block - PT 2,5-QUATTRO - 3209578

Approvals

	B	C
Nominal current IN	20 A	20 A
Nominal voltage UN	600 V	600 V

VDE Zeichengenehmigung

mm²/AWG/kcmil	0.2-2.5
Nominal current IN	24 A
Nominal voltage UN	800 V

cUL Recognized

	B	C
mm²/AWG/kcmil	26-12	26-12
Nominal current IN	20 A	20 A
Nominal voltage UN	600 V	600 V

RS

ABS

NK

IECEE CB Scheme

mm²/AWG/kcmil	0.2-2.5
Nominal voltage UN	800 V

BV

EAC

NK

EAC

Feed-through terminal block - PT 2,5-QUATTRO - 3209578

Approvals

DNV GL

cULus Recognized

Phoenix Contact 2016 © - all rights reserved
http://www.phoenixcontact.com

Power supply unit - TRIO-PS/1AC/24DC/10 - 2866323

Please be informed that the data shown in this PDF Document is generated from our Online Catalog. Please find the complete data in the user's documentation. Our General Terms of Use for Downloads are valid (http://phoenixcontact.com/download)

Primary-switched TRIO POWER power supply for DIN rail mounting, input: 1-phase, output: 24 V DC/10 A

Product Description

TRIO POWER power supplies with standard functionality
TRIO POWER is particularly suited to standard machine production, thanks to 1- and 3-phase versions up to 960 W. The wide-range input and the international approval package enable worldwide use.
The robust metal housing, the high electric strength, and the wide temperature range ensure a high level of power supply reliability.

Why buy this product

- Use the third negative terminal block as a grounding terminal block and minimize installation costs
- Rugged design with metal housing and wide temperature range from -25 to +70°C
- Maximum operational reliability thanks to high MTBF (mean time between failures) of more than 500,000 hours and high dielectric strength of up to 300 V AC
- Compensation of voltage drops by means of output voltage that can be adjusted on the front

Key Commercial Data

Packing unit	1 pc
GTIN	4 046356 046657
Weight per Piece (excluding packing)	1000.0 GRM
Custom tariff number	85044070
Country of origin	China

Technical data

Dimensions

Width	60 mm
Height	130 mm
Depth	152.5 mm

Ambient conditions

Degree of protection	IP20
Ambient temperature (operation)	-25 °C ... 70 °C (> 55° C derating : 2.5%/K)

Power supply unit - TRIO-PS/1AC/24DC/10 - 2866323

Technical data

Ambient conditions

Ambient temperature (storage/transport)	-40 °C ... 85 °C
Max. permissible relative humidity (operation)	≤ 95 % (at 25 °C, non-condensing)
Noise immunity	EN 61000-6-2:2005

Input data

Nominal input voltage range	100 V AC ... 240 V AC
Input voltage range	85 V AC ... 264 V AC (Derating < 90 V AC: 2,5 % / V)
Dielectric strength maximum	300 V AC
AC frequency range	45 Hz ... 65 Hz
Discharge current to PE	< 3.5 mA
Inrush surge current	< 15 A
Power failure bypass	> 24 ms (120 V AC)
	> 24 ms (230 V AC)
Input fuse	6.3 A (slow-blow, internal)
Choice of suitable circuit breakers	10 A ... 16 A (Characteristics B, C, D, K)
Power factor (cos phi)	0.99
Type of protection	Transient surge protection
Protective circuit/component	Varistor

Output data

Nominal output voltage	24 V DC ±1 %
Setting range of the output voltage	22.5 V DC ... 29.5 V DC (> 24 V DC, constant capacity restricted)
Nominal output current	10 A (U_{OUT} = 24 V DC)
Derating	55 °C ... 70 °C (2.5%/K)
Connection in parallel	Yes, for redundancy and increased capacity
Connection in series	Yes
Max. capacitive load	Unlimited
Active current limitation	Approx. 14 A (for short-circuit)
Control deviation	< 1 % (change in load, static 10 % ... 90 %)
	< 2 % (change in load, dynamic 10 % ... 90 %)
	< 0.1 % (change in input voltage ±10 %)
Residual ripple	< 10 mV_{PP}
Output power	240 W
Typical response time	< 1 s
Peak switching voltages nominal load	< 50 mV_{PP}
Maximum power dissipation in no-load condition	6.7 W
Power loss nominal load max.	30 W

General

Net weight	1.4 kg
Operating voltage display	Green LED
Efficiency	89 % (for 230 V AC and nominal values)

Power supply unit - TRIO-PS/1AC/24DC/10 - 2866323

Technical data

General

Insulation voltage input/output	4 kV AC (type test)
	2 kV AC (routine test)
Protection class	I (with PE connection)
MTBF (IEC 61709, SN 29500)	> 981000 h
Mounting position	horizontal DIN rail NS 35, EN 60715
Assembly instructions	Can be aligned: Horizontally 0 mm, vertically 50 mm
Electromagnetic compatibility	Conformance with EMC Directive 2004/108/EC
Low Voltage Directive	Conformance with LV directive 2006/95/EC
Standard – Electrical equipment of machines	EN 60204-1
Standard - Electrical safety	EN 60950-1/VDE 0805 (SELV)
Standard – Electronic equipment for use in electrical power installations and their assembly into electrical power installations	EN 50178/VDE 0160 (PELV)
Standard – Safety extra-low voltage	EN 60950-1 (SELV)
	EN 60204 (PELV)
Standard - Safe isolation	DIN VDE 0100-410
Standard – Protection against shock currents, basic requirements for protective separation in electrical equipment	EN 50178
Standard – Limitation of mains harmonic currents	EN 61000-3-2
UL approvals	UL/C-UL listed UL 508
	UL/C-UL Recognized UL 60950
Overvoltage category	III

Connection data, input

Connection method	Screw connection
Conductor cross section solid min.	0.2 mm²
Conductor cross section solid max.	2.5 mm²
Conductor cross section flexible min.	0.2 mm²
Conductor cross section flexible max.	2.5 mm²
Conductor cross section AWG min.	24
Conductor cross section AWG max.	14
Stripping length	9 mm
Screw thread	M2,5

Connection data, output

Connection method	Screw connection
Conductor cross section solid min.	0.2 mm²
Conductor cross section solid max.	2.5 mm²
Conductor cross section flexible min.	0.2 mm²
Conductor cross section flexible max.	2.5 mm²
Conductor cross section AWG min.	24
Conductor cross section AWG max.	14
Stripping length	9 mm

Power supply unit - TRIO-PS/1AC/24DC/10 - 2866323

Technical data

Connection data, output

Screw thread	M2,5

Signaling

Status display	"DC OK" LED green
Note on status display	U_{OUT} < 0.9 x U_N: LED flashing

Standards and Regulations

Electromagnetic compatibility	Conformance with EMC Directive 2004/108/EC
Shock	30g in each direction, according to IEC 60068-2-27
Noise immunity	EN 61000-6-2:2005
Connection in acc. with standard	CUL
Standards/regulations	EN 61000-4-3
	EN 61000-4-4
	EN 61000-4-6
Standard – Electrical equipment of machines	EN 60204-1
Standard - Electrical safety	EN 60950-1/VDE 0805 (SELV)
Standard – Electronic equipment for use in electrical power installations and their assembly into electrical power installations	EN 50178/VDE 0160 (PELV)
Standard – Safety extra-low voltage	EN 60950-1 (SELV)
	EN 60204 (PELV)
Standard - Safe isolation	DIN VDE 0100-410
Standard – Protection against shock currents, basic requirements for protective separation in electrical equipment	EN 50178
Standard – Limitation of mains harmonic currents	EN 61000-3-2
UL approvals	UL/C-UL listed UL 508
	UL/C-UL Recognized UL 60950
Vibration (operation)	< 15 Hz, amplitude ±2.5 mm (according to IEC 60068-2-6)
Low Voltage Directive	Conformance with LV directive 2006/95/EC

Classifications

eCl@ss

eCl@ss 4.0	27040702
eCl@ss 4.1	27040702
eCl@ss 5.0	27049002
eCl@ss 5.1	27049002
eCl@ss 6.0	27049002
eCl@ss 7.0	27049002
eCl@ss 8.0	27049002
eCl@ss 9.0	27040701

ETIM

ETIM 2.0	EC001039

Power supply unit - TRIO-PS/1AC/24DC/10 - 2866323

Classifications

ETIM

ETIM 3.0	EC001039
ETIM 4.0	EC000599
ETIM 5.0	EC002540

UNSPSC

UNSPSC 6.01	30211502
UNSPSC 7.0901	39121004
UNSPSC 11	39121004
UNSPSC 12.01	39121004
UNSPSC 13.2	39121004

Phoenix Contact 2015 © - all rights reserved
http://www.phoenixcontact.com

Type 3 surge protection plug - PLT-SEC-T3-120-P-UT/PT - 2907922

Please be informed that the data shown in this PDF Document is generated from our Online Catalog. Please find the complete data in the user's documentation. Our General Terms of Use for Downloads are valid (http://phoenixcontact.com/download)

Replacement plug for type 2/3 surge protection from the PLT-SEC-…-UT/PT product series. Nominal voltage 120 V.

Key Commercial Data

Packing unit	1 pc
Weight per Piece (excluding packing)	33.160 g
Custom tariff number	85363080
Country of origin	Germany

Technical data

Dimensions

Height	46.7 mm
Width	17.5 mm
Depth	65.7 mm
Horizontal pitch	1 Div.

Ambient conditions

Degree of protection	IP20
Ambient temperature (operation)	-40 °C ... 80 °C
Ambient temperature (storage/transport)	-40 °C ... 80 °C
Altitude	≤ 6000 m (amsl (above mean sea level))
Permissible humidity (operation)	5 % ... 95 %
Shock (operation)	30g (Half-sine / 11 ms / 3x ±X, ±Y, ±Z)
Vibration (operation)	5g (5 ... 500 Hz / 2.5 h / X, Y, Z)

General

EN type	T2 / T3
IEC power supply system	TN-S
	TT
Number of ports	One

Type 3 surge protection plug - PLT-SEC-T3-120-P-UT/PT - 2907922

Technical data

General

Mode of protection	L-N
	L-PE
	N-PE
Mounting type	on base element
Color	light grey RAL 7035
Housing material	PA 6.6-FR 20 % GF
	PA 6.6-FR
Degree of pollution	2
Flammability rating according to UL 94	V-0
Type	Male
Number of positions	2
Surge protection fault message	optical

Protective circuit

Nominal voltage U_N	120 V AC (TN-S)
	120 V AC (TT)
Nominal frequency f_N	50 Hz (60 Hz)
Maximum continuous voltage U_C	150 V AC
Residual current I_{PE}	≤ 5 µA
Nominal discharge current I_n (8/20) µs	5 kA
Standby power consumption P_C	≤ 10.6 mVA (at U_{REF})
	≤ 13.5 mVA (at U_C)
Reference test voltage U_{REF}	132 V AC
Max. discharge current I_{max} (8/20) µs	10 kA
Combination wave U_{OC}	6 kV
Voltage protection level U_p (L-N)	≤ 0.75 kV (at U_{OC})
	≤ 0.95 kV (at I_n)
Voltage protection level U_p (L-PE)	≤ 0.85 kV
Voltage protection level U_p (N-PE)	≤ 0.85 kV
TOV behavior at U_T (L-N)	240 V AC (5 s / withstand mode)
	240 V AC (120 min / withstand mode)
TOV behavior at U_T (L-PE)	240 V AC (5 s / withstand mode)
	240 V AC (120 min / withstand mode)
	1332 V AC (200 ms / safe failure mode)
TOV behavior at U_T (N-PE)	1200 V AC (200 ms / safe failure mode)
Response time t_A (L-N)	≤ 25 ns
Response time t_A (L-PE)	≤ 100 ns
Response time t_A (N-PE)	≤ 100 ns
Short-circuit current rating I_{SCCR}	10 kA AC
Max. backup fuse with branch wiring	32 A (gG / B / C)

Type 3 surge protection plug - PLT-SEC-T3-120-P-UT/PT - 2907922

Technical data

Additional technical data

Short-circuit current rating I_{SCCR}	0.25 kA DC (Without additional backup fuse in the DC branch wiring)
	5 kA DC (for 20 A gG / B backup fuse)
Maximum continuous voltage U_C	150 V DC
Residual voltage U_{res} (L-N)	≤ 0.68 kV (at 2 kA)
	≤ 0.75 kV (at 3 kA)
	≤ 0.64 kV (at U_{OC} = 4 kV)
Residual voltage U_{res} (L-PE)	≤ 0.58 kV (at 2 kA)
	≤ 0.65 kV (at 3 kA)
	≤ 0.75 kV (at U_{OC} = 4 kV)
Residual voltage U_{res} (N-PE)	≤ 0.58 kV (at 2 kA)
	≤ 0.65 kV (at 3 kA)
	≤ 0.75 kV (at U_{OC} = 4 kV)
Mode of protection	(DC+) - (DC-)
	(DC+/DC-) - PE
IEC test classification (in accordance with IEC 61643-21)	D1
Impulse durability (line-line)	D1 - 500 A
Impulse durability (line-earth)	D1 - 500 A
Pulse discharge current I_{imp} (10/350) µs (line-line)	0.5 kA
Pulse discharge current I_{imp} (10/350) µs (line-earth)	0.5 kA

Connection data

Connection method	pluggable

UL specifications

SPD Type	2CA
Maximum continuous operating voltage MCOV	150 V AC
	150 V DC
Nominal voltage	150 V DC
Rated load current I_L	20 A
Mode of protection	L-N
	L-G
	N-G
	(DC+) - (DC-)
	(DC+) - G
	(DC-) - G
Power distribution system	Single phase
	DC
Nominal frequency	50/60 Hz
Voltage protection rating VPR (L-N)	800 V
Voltage protection rating VPR (L-G)	900 V
Voltage protection rating VPR (N-G)	900 V

Type 3 surge protection plug - PLT-SEC-T3-120-P-UT/PT - 2907922

Technical data

UL specifications

Nominal discharge current I_n	5 kA
Short-circuit current rating (SCCR)	10 kA AC
	5 kA DC

Standards and Regulations

Standards/specifications	IEC 61643-11 2011
	EN 61643-11 2012

Environmental Product Compliance

China RoHS	Environmentally friendly use period: unlimited = EFUP-e
	No hazardous substances above threshold values

Phoenix Contact 2021 © - all rights reserved
http://www.phoenixcontact.com

SCC Item 33-27
Breaker, 2A 1P AC/DC C - ABB SU201M-C2 / Trojan P/N 917139-MC1020
Breaker, 4A 1P AC/DC C - ABB SU201M-C4 / Trojan P/N 917139-MC1040
Breaker, 3A 1P AC/DC C - ABB SU201M-C3 / Trojan P/N 917139-MC1030
Breaker, 10A 1P AC/DC C - ABB SU201M-C6 / Trojan P/N 917139-MC1100
Breaker, 15A 1P AC/DC C - ABB SU201M-C15 / Trojan P/N 917139-MC1150 /

The miniature circuit breaker SU 200 M is ABB's solution for UL 489 branch circuit protection up to 480 Y/277 V AC and 96 V DC. This circuit breaker is an all-round device for AC and DC applications for universal use in North American and global markets due to its approvals acc. to the international standards UL, CSA and IEC. Moreover, SU 200 M is fully compatible with System pro *M* compact® UL 489 accessories.

Features

- High performance MCB with 10 kA interrupting capacity acc. to UL 489 / CSA 22.2 No. 5 and 15 kA breaking capacity acc. to IEC/EN 60947-2
- Certified up to I_n = 40 A at 480 Y/277 V AC acc. to UL 489 / CSA 22.2 No. 5
- Certified for AC and DC use acc. to UL and CSA
- 40 °C reference temperature acc. to UL and CSA
- Current limiting acc. to UL 489
- Clear contact position indication in red/green ("real CPI")

Standards and approvals

Standards	
UL 489	
CSA 22.2 No. 5	
IEC/EN 60947-2	
Approvals	
UL 489	US
CSA 22.2 No. 5	CA
VDE	DE
CCC	CN

General Data		
Standards		UL 489, CSA 22.2 No. 5, IEC/EN 60947-2
Poles		1P, 2P, 3P, 4P
Tripping characteristics		C, K, Z
Rated current I_n		0.2 - 63 A
Rated frequency f		50 / 60 Hz, DC (0 Hz)
Rated insulation voltage U_i acc. to IEC/EN 60664-1		250 V AC (phase to ground), 440 V AC (phase to phase)
Overvoltage category		III
Pollution degree		3
IEC/EN 60947-2		
Rated operational voltage U_e		1P: 230 V AC; 2P, 3P, 4P: 400 V AC
Max. power frequency recovery voltage U_{max}	AC	1P: 253 V AC; 2P, 3P, 4P: 440 V AC
Min. operating voltage		12 V AC, 12 V DC
Rated ultimate short-circuit breaking capacity I_{cu}		15 kA
Rated service short-circuit breaking capacity I_{cs}		≤ 40 A: 11.25 kA > 40 A: 7.5 kA
Rated impulse withstand voltage U_{imp} (1.2/50µs)		4 kV (test voltage 6.2 kV at sea level, 5 kV at 2,000 m)
Dielectric test voltage		2 kV (50 / 60Hz, 1 min.)
Reference temperature for tripping characteristics		30 °C
Electrical endurance		I_n < 30 A: 20,000 ops (AC), I_n ≥ 30 A: 10,000 ops. (AC); 1 cycle (2 s - ON, 13 s - OFF, I_n ≤ 32 A), 1 cycle (2 s - ON, 28 s - OFF, I_n > 32 A)
UL / CSA		
Rated voltage	AC	1P: 277 V AC up to 40 A for C, Z char.,
	AC	277 V AC up to 35 A for K char., 240 V AC
	AC	2P, 3P, 4P: 480 Y / 277 V AC up to 40 A for C, Z char.,
	AC	480 Y / 277 V AC up to 35 A for K char., 240 V AC
	DC	1P: 48 V DC; 2P: 96 V DC (2p in series)
Rated interrupting capacity acc. to UL 1077		–
Short-circuit current rating acc. to UL 489		10 kA
Application		–
Reference temperature for tripping characteristics		40 °C
Electrical endurance		6,000 ops (AC), 6,000 ops. (DC); 1 cycle (1 s - ON, 9 s - OFF)
Mechanical data		
Housing		Insulation group II, RAL 7035
Toggle		Insulation group II, black, sealable
Contact position indication		Real CPI (green OFF / red ON)
Protection degree acc. to DIN EN 60529		IP20*, IP40 in enclosure with cover
Mechanical endurance		20,000 ops.
Shock resistance acc. to IEC/EN 60068-2-27		25 g - 2 shocks - 13 ms
Vibration resistance acc. to IEC/EN 60068-2-6		5g - 20 cycles at 5…150…5 Hz with load 0.8 I_n
Environmental conditions (damp heat cyclic) acc. to IEC/EN 60068-2-30		28 cycles with 55°C/90-96% and 25°C/95-100%
Ambient temperature		-25 ... +55°C
Storage temperature		-40 ... +70 °C
Installation		
Terminal		Failsafe bi-directional cylinder-lift terminal
Cross-section of conductors (top/bottom)		solid, stranded: 35 mm² / 35 mm² flexible: 25 mm² / 25 mm² 18 – 4 AWG
Cross-section of busbars (top/bottom)		10 mm² / 10 mm² 18 – 8 AWG
Torque		2.8 Nm AWG 18-16: 13.3 in-lbs. AWG 14-10: 17.7 in-lbs. AWG 8-4: 39.8 in-lbs.
Screwdriver		No. 2 Pozidrive
Mounting		On DIN rail 35 mm acc. to EN 60715 by fast clip
Mounting position		any
Supply		optional
Dimensions and weight		
Mounting dimensions acc. to DIN 43880		Mounting dimension 3
Pole dimensions (H x D x W)		111 x 69 x 17.5 mm
Pole weight		approx. 125 g
Combination with auxiliary elements		
Auxiliary contact		Yes
Signal contact		Yes
Shunt trip		Yes

Tripping characteristics

Acc. to	Tripping characte-ristics	Rated current	Thermal release [1]			Electromagnetic release [2]		
			Currents: conventional non-tripping current	conventional tripping current	Tripping time	Range of instantaneous tripping		Tripping time
		I_n	I_1	I_2				
IEC/EN 60947-2	C	0.5 to 63 A	$1.05 \cdot I_n$	$1.3 \cdot I_n$	> 1 h < 1 h [3]	$5 \cdot I_n$	$10 \cdot I_n$	> 0.2 s < 0.2 s
	K	0.2 to 63 A	$1.05 \cdot I_n$	$1.3 \cdot I_n$	> 1 h < 1 h [3]	$10 \cdot I_n$	$14 \cdot I_n$	> 0.2 s < 0.2 s
	Z	0.5 to 63 A	$1.05 \cdot I_n$	$1.3 \cdot I_n$	> 1 h < 1 h [3]	$2 \cdot I_n$	$3 \cdot I_n$	> 0.2 s < 0.2 s

[1] The thermal releases are calibrated to a nominal reference ambient temperature of 30 °C.
In the case of higher ambient temperatures, the current values fall by approx. 6 % for each 10 K temperature rise.

[2] The indicated tripping values of electromagnetic tripping devices apply to a frequency of 50/60 Hz. The thermal release operates independent of frequency.

[3] As from operating temperature (after I_1 > 1h)

C characteristic

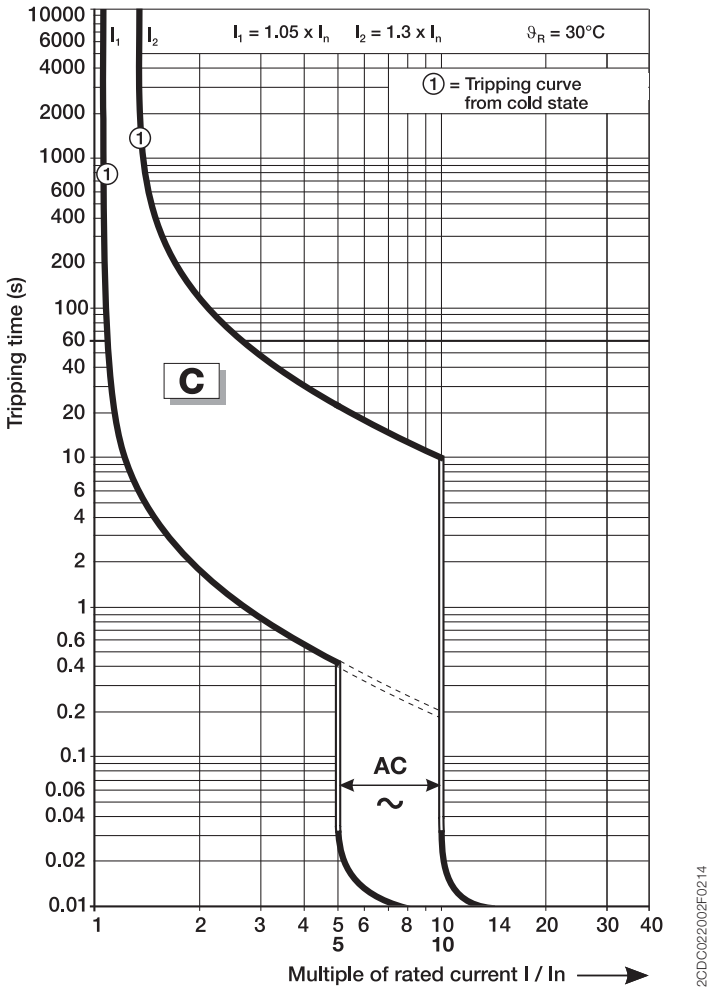

K characteristic

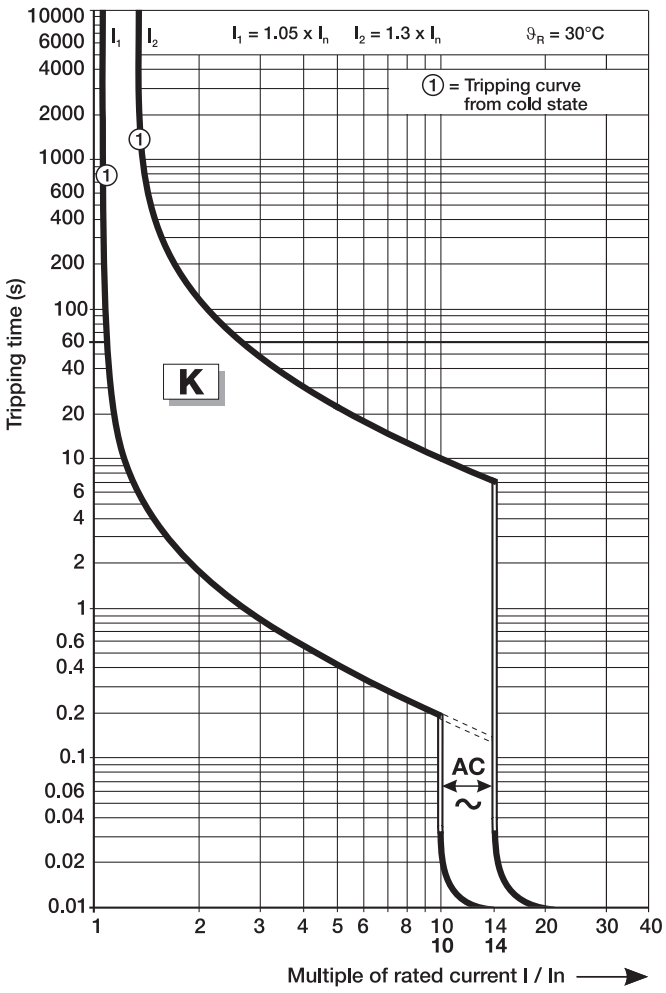

Z characteristic

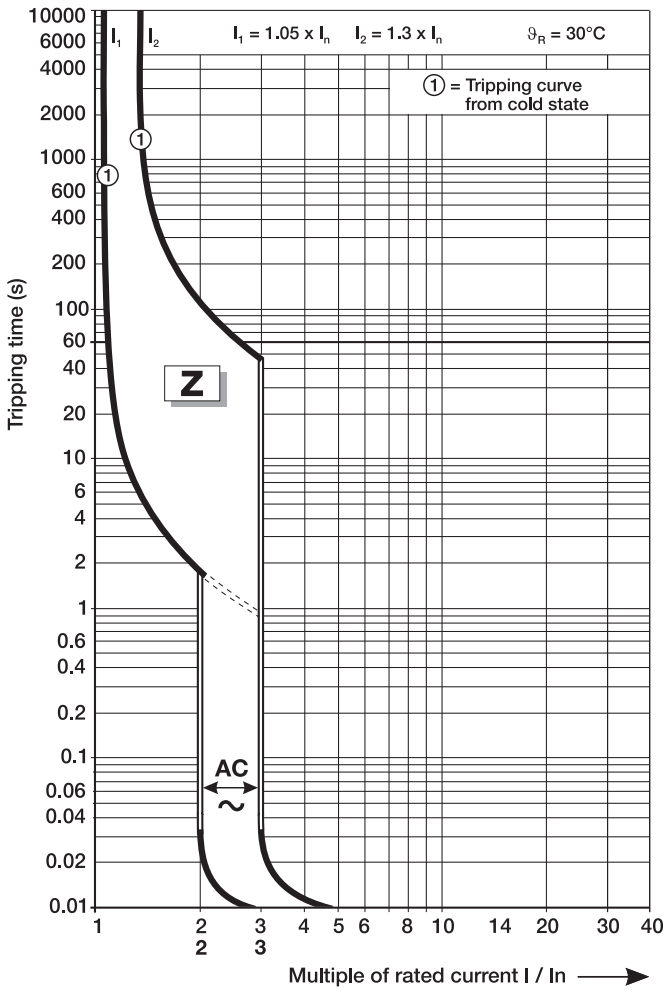

Type	Voltage	Current	Power Factor	Phase	I_{peak}	I^2t
		A			kA	kA^2S
SU203M-K0.2	480Y/277	10000	0.45-0.5	3	0.026	0.008
SU203M-K7	480Y/277	4095	0.45-0.5	3	2.3	11.9
SU203M-K7	480Y/277	7500	0.45-0.5	3	3.4	16.7
SU203M-K7	480Y/277	10000	0.45-0.5	3	4.6	19.0
SU203M-K20	480Y/277	4095	0.45-0.5	3	2.9	18.1
SU203M-K20	480Y/277	7500	0.45-0.5	3	4.3	28.1
SU203M-K20	480Y/277	10000	0.45-0.5	3	6.4	34.6
SU203M-K35	480Y/277	4095	0.45-0.5	3	3.4	27.9
SU203M-K35	480Y/277	7500	0.45-0.5	3	4.7	33.1
SU203M-K35	480Y/277	10000	0.45-0.5	3	9.0	72.0
SU203M-C40	480Y/277	4095	0.45-0.5	3	3.4	22.8
SU203M-C40	480Y/277	7500	0.45-0.5	3	5.1	42.5
SU203M-C40	480Y/277	10000	0.45-0.5	3	9.3	74.6
SU201M-K0.2	277	10000	0.45-0.5	1	0.7	0.092
SU201M-K7	277	4095	0.45-0.5	1	2.5	10.5
SU201M-K7	277	7500	0.45-0.5	1	3.4	16.9
SU201M-K7	277	10000	0.45-0.5	1	3.4	14.5
SU201M-K20	277	4095	0.45-0.5	1	2.8	14.7
SU201M-K20	277	7500	0.45-0.5	1	4.1	23.5
SU201M-K20	277	10000	0.45-0.5	1	4.7	32.5
SU201M-K35	277	4095	0.45-0.5	1	3.0	19.8
SU201M-K35	277	7500	0.45-0.5	1	4.7	36.5
SU201M-K35	277	10000	0.45-0.5	1	4.4	22.1
SU201M-C40	277	4095	0.45-0.5	1	3.6	22.9
SU201M-C40	277	7500	0.45-0.5	1	5.3	52.6
SU201M-C40	277	10000	0.45-0.5	1	5.9	44.9
SU203M-K63	240	4095	0.45-0.5	3	3.6	19.9
SU203M-K63	240	7500	0.45-0.5	3	5.1	33.0
SU203M-K63	240	10000	0.45-0.5	3	6.3	43.3
SU201M-K63	240	4095	0.45-0.5	1	3.9	33.8
SU201M-K63	240	7500	0.45-0.5	1	5.2	43.8
SU201M-K63	240	10000	0.45-0.5	1	6.5	61.8

Accessory overview

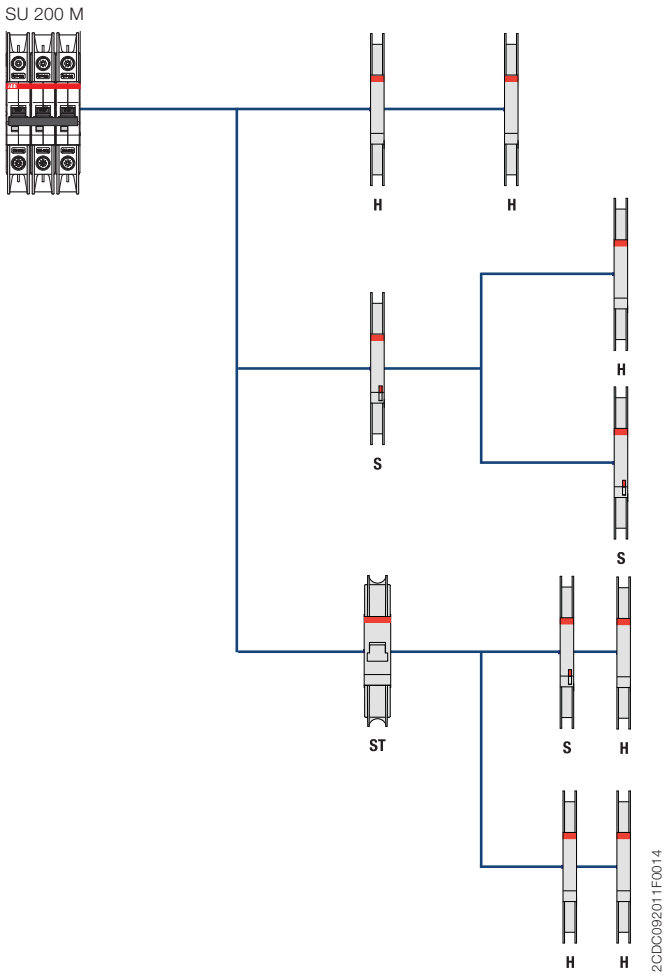

H	Auxiliary contact (change-over contact)	S2C-H6RU
S/H	Signal contact	S2C-S6RU
ST	Shunt trip	S2C-A...U

The certification of the Accessories has been done with one accessory only.

The number of electrical operations is limited to 4,000 operations for the maximum combinations and the combinations including shunt trips.

Dimensional drawing

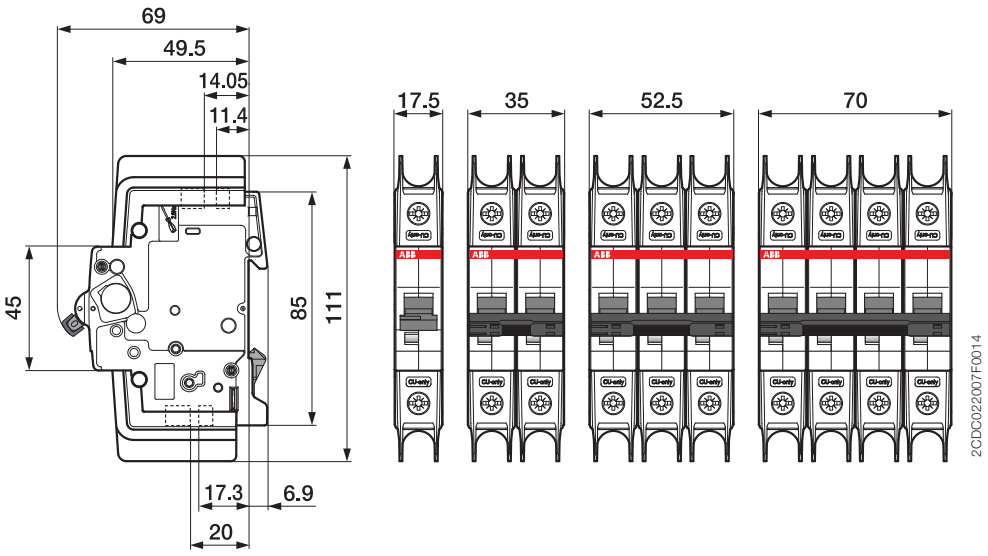

Panduct® Type F Narrow Slot Wiring Duct

- Narrow slot/finger design provides more slots to fit the spacing of high-density terminal blocks and other hardware
- Material: Lead-free PVC
- UL recognized continuous use temperature: 122°F (50°C)
- UL 94 flammability rating of V-0
- Conforms with NFPA 79-2007 section 13.3.1 requirement for flame retardant material
- Provided with mounting holes
- Base and cover length is 6 feet

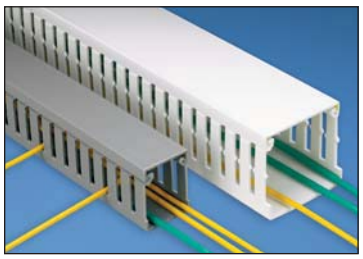

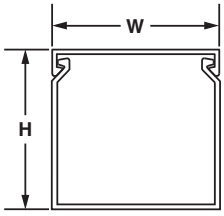

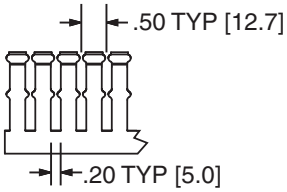

Multiple slot restrictors present with 2" and greater duct wall height.

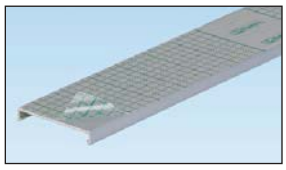

To order cover with protective film add "-F" to part number. 6" cover not available with film.

Base Part Number	Duct Size (W x H)* In.	Duct Size (W x H)* mm	Slot Width In.	Slot Width mm	Cover Part Number	Std. Pkg. Qty.	Base Ctn. Qty.	Cover Ctn. Qty.
F.5X.5LG6	0.69 x 0.60	17.5 x 15.2	0.20	5.0	C.5LG6	6	120	120
F.5X1LG6	0.69 x 1.06	17.5 x 26.9	0.20	5.0	C.5LG6	6	120	120
F.75X.75LG6	0.93 x 0.82	23.6 x 20.9	0.20	5.0	C.75LG6	6	120	120
F.75X1.5LG6	0.93 x 1.57	23.6 x 39.9	0.20	5.0	C.75LG6	6	120	120
F1X1LG6	1.26 x 1.13	32.0 x 28.7	0.20	5.0	C1LG6	6	120	120
F1X1.5LG6	1.26 x 1.62	32.0 x 41.1	0.20	5.0	C1LG6	6	120	120
F1X2LG6	1.26 x 2.12	32.0 x 53.8	0.20	5.0	C1LG6	6	120	120
F1X3LG6	1.26 x 3.12	32.0 x 79.2	0.20	5.0	C1LG6	6	120	120
F1X4LG6	1.26 x 4.10	32.0 x 104.1	0.20	5.0	C1LG6	6	60	120
F1.5X1LG6	1.75 x 1.12	44.5 x 28.4	0.20	5.0	C1.5LG6	6	120	120
F1.5X1.5LG6	1.75 x 1.62	44.5 x 41.1	0.20	5.0	C1.5LG6	6	120	120
F1.5X2LG6	1.75 x 2.12	44.5 x 53.8	0.20	5.0	C1.5LG6	6	120	120
F1.5X3LG6	1.75 x 3.12	44.5 x 79.2	0.20	5.0	C1.5LG6	6	120	120
F1.5X4LG6	1.75 x 4.10	44.5 x 104.1	0.20	5.0	C1.5LG6	6	60	120
F2X1LG6	2.25 x 1.12	57.2 x 28.4	0.20	5.0	C2LG6	6	120	120
F2X1.5LG6	2.25 x 1.62	57.2 x 41.1	0.20	5.0	C2LG6	6	120	120
F2X2LG6	2.25 x 2.12	57.2 x 53.8	0.20	5.0	C2LG6	6	120	120
F2X3LG6	2.25 x 3.12	57.2 x 79.2	0.20	5.0	C2LG6	6	60	120
F2X4LG6	2.25 x 4.10	57.2 x 104.1	0.20	5.0	C2LG6	6	60	120
F2X5LG6	2.25 x 5.10	57.2 x 129.5	0.20	5.0	C2LG6	6	60	120
F2.5X3LG6	2.75 x 3.12	69.9 x 79.2	0.20	5.0	C2.5LG6	6	120	120
F3X1LG6	3.25 x 1.12	82.6 x 28.4	0.20	5.0	C3LG6	6	120	120
F3X2LG6	3.25 x 2.12	82.6 x 53.8	0.20	5.0	C3LG6	6	120	120
F3X3LG6	3.25 x 3.12	82.6 x 79.2	0.20	5.0	C3LG6	6	60	120
F3X4LG6	3.25 x 4.10	82.6 x 104.1	0.20	5.0	C3LG6	6	60	120
F3X5LG6	3.25 x 5.10	82.6 x 129.5	0.20	5.0	C3LG6	6	60	120
F4X2LG6	4.25 x 2.12	108.0 x 53.8	0.20	5.0	C4LG6	6	60	120
F4X3LG6	4.25 x 3.12	108.0 x 79.2	0.20	5.0	C4LG6	6	60	120
F4X4LG6	4.25 x 4.10	108.0 x 104.1	0.20	5.0	C4LG6	6	60	120
F4X5LG6	4.25 x 5.10	108.0 x 129.5	0.20	5.0	C4LG6	6	60	120
F6X4LG6	6.25 x 4.15	158.8 x 105.4	0.20	5.0	C6LG6	6	60	120

NEW!

Part number shown for LG (Light Gray). For other color availability see color selection guide, page C1.48.
Base and cover sold separately.
*"H" dimension includes duct and cover.

AU 2 CONDUCTOR AL/CU

- Manufactured from high strength 6061-T6 aluminum alloy.
- Electro-Tin plated.
- UL 486B 90° C Listed and is CSA certified for 600 Volts.
- Suitable for use with either copper or aluminum conductors.
- Chamfered wire entry provides ease of installation.
- UL File E6207

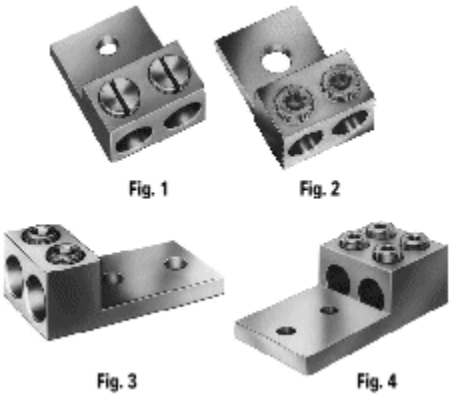

Catalog No.	Fig. No.	Wire Range AL/CU	Bolt Size	Length	Width	Hex Size	N.A.E.D. No.
AU-0	1	1/0-14 STR.	1/4	1-15/32	1-1/8	S	78366900066
AU-2/0	1	2/0-14 STR.	1/4	1-15/32	1-1/4	3/16	78366900074
AU-250	2	250 MCM-6 STR.	3/8	2-9/16	1-21/32	5/16	78366900330
AU-350	2	350 MCM-6 STR.	1/2	2-7/8	1-57/64	5/16	78366900381
AU-350-2N	3	350 MCM-6 STR.	1/2 (2)	4-5/16	2	5/16	78366900574
AU-600	2	600 MCM-2 STR.	1/2	3-3/16	2-13/32	1/2	78366900568
AU-600-2NS	3	600 MCM-2 STR.	1/2 (2)	4-11/16	2-13/32	1/2	78366900576
AU-600-2N	4	600 MCM-2 STR.	1/2 (2)	5-1/2	2-13/32	1/2	78366900577
AU-800	2	800 MCM-300 MCM	5/8	3-3/8	3-3/16	1/2	78366900680
AU-800-2NS	3	800 MCM-300 MCM	1/2 (2)	4-3/4	3-3/16	1/2	78366900700
AU-800-2N	4	800 MCM-300 MCM	1/2 (2)	6-3/16	3	1/2	78366900702
AU-1000	2	1000 MCM-500 MCM	5/8	3-3/8	3-3/16	9/16	78366900699
AU-1000-2NS	3	1000 MCM-500 MCM	1/2 (2)	4-3/4	3-3/16	9/16	78366900794
AU-1000-2N	4	1000 MCM-500 MCM	1/2 (2)	6-3/16	3-3/16	9/16	78366900796

General Information

Extended Product Type:	DBL125
Product ID:	1SNL312510R0000
EAN:	3472599856585
Catalog Description:	DBL125 Distribution Terminal Blocks
Long Description:	- Save installation time with our modular solutions, - Ease the installation with plate or rail mounting options on our modular blocks, - Easily increase the number of outputs using jumpers.

Categories

Products » Low Voltage Products and Systems » Connection Devices » Terminal Blocks » Solution Series

Ordering

Minimum Order Quantity:	1 piece
Customs Tariff Number:	85369010
Color:	Grey

Dimensions

Product Net Height:	75 mm
Product Net Depth:	50.7 mm
Product Net Weight:	120 g
Product Net Width:	28.2 mm

Technical

Spacing:	28.2 mm
Connection Type:	Screw clamp
Function:	Feed-through
Connecting Capacity Main Circuit:	Screw Clamp / Rigid 1x 10 ... 35 mm²
Rated Current (I_n):	Main Circuit 125 A
Rated Short-time Withstand Current (I_{cw}):	for 1 s 4000 A
Pollution Degree:	3
Power Loss:	4 W
Degree of Protection:	acc. to IEC 60529, IEC 60947-1, EN 60529 Main Terminals IP20
Insulation Material:	Polyamide
Mounting on DIN Rail:	TH35-7.5 (35 x 7.5 mm Mounting Rail) acc. to IEC 60715 TH35-15 (35 x 15 mm Mounting Rail) acc. to IEC 60715
Tightening Torque:	Main Circuit 3.5 ... 5 N·m
Rated Cross-Section:	35 mm²

Technical UL/CSA

Connecting Capacity UL/CSA:	Stranded 2 AWG
Short-Circuit Current Rating (SCCR):	100 kA
Maximum Operating Voltage UL/CSA:	Main Circuit 1000 V

Environmental

RoHS Status:	Following EU Directive 2002/95/EC August 18, 2005 and amendment
Ambient Air Temperature:	Operation -55 ... +110 °C Storage -55 ... +110 °C

Certificates and Declarations (Document Number)

Instructions and Manuals:	1SNC166001B0201
CB Certificate:	1SND166005A0200
CSA Certificate:	1SND166007A0200
cUL Certificate:	1SND166006A0200
Data Sheet, Technical Information:	1SNC166013B0201
Declaration of Conformity - CE:	1SND225005U1000
EAC Certificate:	1SND161011A1100
RoHS Information:	1SND230557F0200

Classifications

ETIM 5:	EC000276 - Distribution terminal block
ETIM 6:	EC000276 - Distribution terminal block
Object Classification Code:	X

Container Information

Package Level 1 Width:	57 mm
Package Level 1 Length:	95 mm
Package Level 1 Height:	37 mm
Package Level 1 Gross Weight:	0.14 kg
Package Level 1 EAN:	3472599856585
Package Level 2 Units:	75 piece
Package Level 2 Width:	230 mm
Package Level 2 Length:	380 mm
Package Level 2 Height:	310 mm
Product Packing Type:	Box
Package Level 1 Units:	1 piece

PanelView Plus 7 Performance Terminals

Catalog Numbers 2711P-T7C22D9P, 2711P-T7C22D9P-B, 2711P-T7C22A9P, 2711P-T7C22A9P-B, 2711P-B7C22D9P, 2711P-B7C22D9P-B, 2711P-B7C22A9P, 2711P-B7C22A9P-B, 2711P-T9W22D9P, 2711P-T9W22D9-B, 2711P-T9W22A9P, 2711P-T9W22A9P-B, 2711P-T10C22D9P, 2711P-T10C22D9P-B, 2711P-T10C22A9P, 2711P-T10C22A9P-B, 2711P-B10C22D9P, 2711P-B10C22D9P-B, 2711P-B10C22A9P, 2711P-B10C22A9-B, 2711P-T12W22D9P, 2711P-T12W22D9P-B, 2711P-T12W22A9P, 2711P-T12W22A9P-B, 2711P-T15C22D9P, 2711P-T15C22D9P-B, 2711P-T15C22A9P, 2711P-T15C22A9P-B, 2711P-B15C22D9P, 2711P-B15C22D9P-B, 2711P-B15C22A9P, 2711P-B15C22A9P-B, 2711P-T19C22D9P, 2711P-T19C22D9P-B, 2711P-T19C22A9P, 2711P-T19C22A9P-B

Topic	Page
Environmental Specifications	2
Certifications	3
Technical Specifications	4
Product Dimensions	7
Accessories	8
HMI Software	9
Additional Resources	10

Summary of Changes

Topic	Page
Updated system memory to 512 MB RAM and 512 MB storage. Updated user memory to 80 MB, approx, nonvolatile storage for applications.	4, 5, 6

The PanelView™ Plus 7 Performance terminals are operator interface devices. They monitor and control devices that are attached to ControlLogix® and CompactLogix™ 5370 controllers on an EtherNet/IP network. Animated graphic and text displays provide operators a view into the operating state of a machine or process. Operators interact with the control system by using touch screen or keypad input.

Features include the following:

- FactoryTalk® View Machine Edition software, version 8.1, provides a familiar environment for creating HMI applications
- Windows CE operating system with desktop access for configuration and third-party applications
- Connection to ControlLogix or CompactLogix 5370 controllers
- Ethernet communication that can support Device Level Ring (DLR), linear, or star network topologies
- Web browser, Microsoft file viewers, text editor, PDF viewer, remote desktop connection, and media player on the terminal desktop

Environmental Specifications

This table lists environmental specifications for the PanelView Plus 7 Performance terminals.

Attribute	Value
Temperature, operating (1)	0…55 °C (32…131 °F)
Temperature, nonoperating	-25…+70 °C (-13…+158 °F)
Heat dissipation (2)	7-in. DC (touch, and touch with keypad), 51 BTU (typical) 7-in. AC (touch, and touch with keypad), 53 BTU (typical) 9-in. DC, 55 BTU (typical) 9-in. AC, 58 BTU (typical) 10-in. DC (touch, and touch with keypad), 51 BTU (typical) 10-in. AC (touch, and touch with keypad), 56 BTU (typical) 12-in. DC, 60 BTU (typical) 12-in. AC, 67 BTU (typical) 15-in. DC (touch, and touch with keypad), 61 BTU (typical) 15-in. AC (touch, and touch with keypad), 68 BTU (typical) 19-in. DC, 114 BTU (typical) 19-in. AC, 119 BTU (typical)
Altitude, operating	2000M
Relative humidity	5…95% without condensation
Vibration	0.012 pk-pk, 10…57 Hz 2 g peak at 57…500 Hz (3)
Shock, operating	15 g at 11 ms
Shock, nonoperating	30 g at 11 ms
Enclosure ratings	NEMA and UL Type 12, 13, 4X, also rated IP66 as Classified by UL

(1) The 19-inch terminals (2711P-T19C22D9P, 2711P-T19C22D9P-B, 2711P-T19C22A9P, and 2711P-T19C22A9P-B) are rated up to 50 °C (122 °F) operating temperature.
(2) Typical BTU measurements were taken at 25 °C (77 °F).
(3) The 15-inch and 19-inch terminals (2711P-T15C22D9P, 2711P-T15C22D9P-B, 2711P-T15C22A9P, 2711P-T15C22A9P-B, 2711P-B15C22D9P, 2711P-B15C22D9P-B, 2711P-B15C22A9P, 2711P-B15C22A9P-B, 2711P-T19C22D9P, 2711P-T19C22D9P-B, 2711P-T19C22A9P, 2711P-T19C22A9P-B) are rated to: 0.006 in. pk-pk, 10...57 Hz, 1 g peak at 57...640 Hz.

Certifications

This table lists certifications for the PanelView Plus 7 Performance terminals.

Certification[1]	Value
cULus	cULus Listed Industrial Control Equipment for use in Hazardous Locations (E10314) per standards ANSI / ISA 12.12.01 and CSA C22.2 No. 213. rated: • Class I, Div 2, Groups A, B, C, D Enclosure type ratings per UL50 and CSA C22.2 No. 94.2-07. Enclosure ingress protection classified by UL per IEC 60529.
CE (EMC)	European Union 2004/108/EC EMC Directive, compliant with: • EN 61000-6-2; Industrial Immunity • EN 61000-6-4; Industrial Emissions • EN 61131-2; Programmable Controllers
CE (LVD)	European Union 2006/95/EC Low Voltage Directive, compliant with: • EN 61131-2; Programmable Controllers
RCM	Australian Radiocommunications Act, compliant with: • AS/NZS CISPR 11; Industrial Emissions
RoHS	China RoHS, Turkey RoHS, European RoHS
KCC	Certificate of compliance
EtherNet/IP	ODVA conformance tested to EtherNet/IP specifications

(1) When marked. See the Product Certification link at http://www.rockwellautomation.com/global/certification/overview.page for Declarations of Conformity, Certificates, and other certification details.

SCC Item 21
PLC, AB HMI PLUS 7 10 512MB - Allen Bradley 2711P-T10C22D9P / Trojan P/N 917408-010 - Page 4/12

Technical Specifications

The tables in this section provide technical specifications for the PanelView Plus 7 Performance terminals.

PanelView Plus 7 Performance 7-in and 9-in Terminals

Attribute	7-in. Touch 2711P--T7C22D9P, 2711P--T7C22D9P-B (1) 2711P-T7C22A9P, 2711P-T7C22A9P-B	7-in. Touch with Keypad 2711P-B7C22D9P, 2711P-B7C22D9P-B (1) 2711P-B7C22A9P, 2711P-B7C22A9P-B	9-in. Touch 2711P-T9W22D9P, 2711P-T9W22D9P-B (1) 2711P-T9W22A9P, 2711P-T9W22A9P-B
Operator input	Touch	Touch with keypad	Touch
Display type	TFT Color		
Display size, diagonal	6.5-in.		9-in. widescreen
Viewing area (W x H)	132 x 99 mm (5.2 x 3.9 in.)		196 x 118 mm (7.7 x 4.6 in.)
Display resolution	640 x 480 VGA, 18-bit color graphics		800 x 480 WVGA, 18-bit color graphics
Aspect ratio	4:3		5:3
Brightness, typical	300 cd/m^2 (Nits)		
Backlight life	White light-emitting diode, solid-state Life: 50,000 h min at 40 °C (104 °F) to half-brightness, backlight is not replaceable		
Touch screen	Analog resistive Actuation rating: 1 million presses Operating force: 100 grams		
Battery (real-time clock backup)	Accuracy: +/-2 minutes per month. Battery life: 4 years min at 25 °C (77 °F) Replacement: CR2032 lithium coin cell		
Memory: • System • User	• 512 MB RAM and 512 MB storage • 80 MB, approx, nonvolatile storage for applications		
Secure Digital (SD) card slot	One SD card slot for external storage; supports cat. no. 1784-SD*x* cards		
USB ports: • Host • Device	• Two USB high-speed 2.0 host ports (type A) support removable flash drives for external storage • One high-speed 2.0 device port (type B) that will be functional in a future release		
Operating system	Windows CE with Extended Features and MS Office Viewers (includes FTP, VNC client server, ActiveX controls, PDF reader, third-party device support)		
Ethernet ports	Two 10/100Base-T, Auto MDI/MDI-X Ethernet ports that support Device Level Ring (DLR), linear, or star network topologies		
Software	FactoryTalk View Studio for Machine Edition, FactoryTalk ViewPoint, version 2.6 or later		
Electrical			
Input voltage	24V DC nom (18…30V DC)	100…240V AC	24V DC nom (18…30V DC)	100…240V AC	24V DC nom (18…30V DC)	100…240V AC
Power consumption	50 W max (2.1 A at 24V DC)	105VA	50 W max (2.1 A at 24V DC)	105VA	50 W max (2.1 A at 24V DC)	105VA
Power supply	Supports (SELV) and (PELV) 24V DC supplies (2)	—	Supports (SELV) and (PELV) 24V DC supplies (2)	—	Supports (SELV) and (PELV) 24V DC supplies (2)	—
Mechanical						
Weight, approx	1.2 kg (2.65 lb)		1.47 kg (3.25 lb)		1.58 kg (3.48 lb)	
Dimensions, approx (H x W x D)	170 x 212 x 69.6 mm 6.69 x 8.35 x 2.74 in.		179 x 285 x 69.6 mm 7.05 x 11.22 x 2.74 in.		190 x 280 x 69.6 mm 7.48 x 11.02 x 2.74 in.	
Cutout dimensions, approx (H x W)	142 x 184 mm 5.59 x 7.24 in.		142 x 237 mm 5.59 x 9.33 in.		162 x 252 mm 6.38 x 9.92 in.	

(1) Catalog numbers with a -B extension denote terminals that exclude the Allen-Bradley brand marking. Customers can put their own brand labels on these terminals.
(2) DC-powered terminals support safety extra low voltage (SELV) and protective extra low voltage (PELV) 24V DC power supplies such as cat. nos. 1606-XLP95E, 1606-XLP100E, 2711P-RSACDIN.

PanelView Plus 7 Performance 10-in and 12-in Terminals

Attribute	10-in. Touch 2711P-T10C22D9P, 2711P-T10C22D9P-B [1] 2711P-T10C22A9P, 2711P-T10C22A9P-B	10-in. Touch with Keypad 2711P-B10C22D9P, 2711P-B10C22D9P-B [1] 2711P-B10C22A9P, 2711P-B10C22A9P-B	12-in. Touch 2711P-T12W22D9P, 2711P-T12W22D9P-B [1] 2711P-T12W22A9P, 2711P-T12W22A9P-B
Operator input	Touch	Touch with keypad	Touch
Display type	TFT Color		
Display size, diagonal	10.4-in.		12.1-in.
Viewing area (W x H)	211 x 158 mm (8.3 x 6.2 in.)		261 x 163 mm (10.3 x 6.4 in.)
Display resolution	800 x 600 SVGA, 18-bit color graphics		1280 x 800 WXGA, 18-bit color graphics
Aspect ratio	4:3		16:10
Brightness, typical	300 cd/m^2 (Nits)		
Backlight life	White light-emitting diode, solid-state Life: 50,000 h min at 40 °C (104 °F) to half-brightness, backlight is not replaceable		
Touch screen	Analog resistive Actuation rating: 1 million presses Operating force: 100 grams		
Battery (real-time clock backup)	Accuracy: +/-2 minutes per month. Battery life: 4 years min at 25 °C (77 °F) Replacement: CR2032 lithium coin cell		
Memory: • System • User	• 512 MB RAM and 512 MB storage • 80 MB, approx, nonvolatile storage for applications		
Secure Digital (SD) card slot	One SD card slot for external storage; supports cat. no. 1784-SD*x* cards		
USB ports: • Host • Device	• Two USB high-speed 2.0 host ports (type A) support removable flash drives for external storage • One high-speed 2.0 device port (type B) that will be functional in a future release		
Operating system	Windows CE with Extended Features and MS Office Viewers (includes FTP, VNC client server, ActiveX controls, PDF reader, third-party device support)		
Ethernet ports	Two 10/100Base-T, Auto MDI/MDI-X Ethernet ports that support Device Level Ring (DLR), linear, or star network topologies		
Software	FactoryTalk View Studio for Machine Edition, FactoryTalk ViewPoint, version 2.6 or later		
Electrical			
Input voltage	24V DC nom (18…30V DC)	100…240V AC	24V DC nom (18…30V DC)	100…240V AC	24V DC nom (18…30V DC)	100…240V AC
Power consumption	50 W max (2.1 A at 24V DC)	105VA	50 W max (2.1 A at 24V DC)	105VA	50 W max (2.1 A at 24V DC)	105VA
Power supply	Supports (SELV) and (PELV) 24V DC supplies[2]	—	Supports (SELV) and (PELV) 24V DC supplies[2]	—	Supports (SELV) and (PELV) 24V DC supplies[2]	—
Mechanical						
Weight, approx	2.28 kg (5.03 lb)		2.58 kg (5.69 lb)		2.54 kg (5.60 lb)	
Dimensions, approx (H x W x D)	252 x 297 x 69.6 mm 9.92 x 11.69 x 2.74 in.		252 x 385 x 69.6 mm 9.92 x 15.16 x 2.74 in.		240 x 340 x 69.6 mm 9.69 x 13.39 x 2.74 in.	
Cutout dimensions, approx (H x W)	224 x 269 mm 8.82 x 10.59 in.		224 x 335 mm 8.82 x 13.19 in.		218 x 312 mm 8.58 x 12.28 in.	

(1) Catalog numbers with a -B extension denote terminals that exclude the Allen-Bradley brand marking. Customers can put their own brand labels on these terminals.
(2) DC-powered terminals support safety extra low voltage (SELV) and protective extra low voltage (PELV) 24V DC power supplies such as cat. nos. 1606-XLP95E, 1606-XLP100E, 2711P-RSACDIN.

PanelView Plus 7 Performance 15-in and 19-in Terminals

Attribute	15-in. Touch 2711P-T15C22D9P, 2711P-T15C22D9P-B [1] 2711P-T15C22A9P, 2711P-T15C22A9P-B	15-in. Touch with Keypad 2711P-B15C22D9P, 2711P-B15C22D9P-B [1] 2711P-B15C22A9P, 2711P-B15C22A9P-B	19-in. Touch 2711P-T19C22D9P, 2711P-T19C22D9P-B [1] 2711P-T19C22A9P, 2711P-T19C22A9P-B
Operator input	Touch	Touch with keypad	Touch
Display type	TFT Color		
Display size, diagonal	15-in.		19-in.
Viewing area (W x H)	304 x 228 mm (12.0 x 9.0 in.)		376 x 301 mm (14.8 x 11.9 in.)
Display resolution	1024 x 768 XGA, 18-bit color graphics		1280 x 1024 SXGA, 18-bit color graphics
Aspect ratio	4:3		5:4
Brightness, typical	300 cd/m^2 (Nits)		
Backlight life	White light-emitting diode, solid-state Life: 50,000 h min at 40 °C (104 °F) to half-brightness, backlight is not replaceable		
Touch screen	Analog resistive Actuation rating: 1 million presses Operating force: 100 grams		
Battery (real-time clock backup)	Accuracy: +/-2 minutes per month. Battery life: 4 years min at 25 °C (77 °F) Replacement: CR2032 lithium coin cell		
Memory: • System • User	• 512 MB RAM and 512 MB storage • 80 MB, approx, nonvolatile storage for applications		
Secure Digital (SD) card slot	One SD card slot for external storage; supports cat. no. 1784-SD*x* cards		
USB ports: • Host • Device	• Two USB high-speed 2.0 host ports (type A) support removable flash drives for external storage • One high-speed 2.0 device port (type B) that will be functional in a future release		
Operating system	Windows CE with Extended Features and MS Office Viewers (includes FTP, VNC client server, ActiveX controls, PDF reader, third-party device support)		
Ethernet ports	Two 10/100Base-T, Auto MDI/MDI-X Ethernet ports that support Device Level Ring (DLR), linear, or star network topologies		
Software	FactoryTalk View Studio for Machine Edition, FactoryTalk ViewPoint, version 2.6 or later		
Electrical			
Input voltage, DC	24V DC nom (18…30V DC)	100…240V AC	24V DC nom (18…30V DC)	100…240V AC	24V DC nom (18…30V DC)	100…240V AC
Power consumption, DC	50 W max (2.1 A at 24V DC)	105VA	50 W max (2.1 A at 24V DC)	105VA	50 W max (2.1 A at 24V DC)	105VA
Power supply	Supports (SELV) and (PELV) 24V DC supplies[2]	—	Supports (SELV) and (PELV) 24V DC supplies[2]	—	Supports (SELV) and (PELV) 24V DC supplies[2]	—
Mechanical						
Weight, approx	3.69 kg (8.14 lb)		4.14 kg (9.13 lb)		5.62 kg (12.40 lb)	
Dimensions, approx (H x W x D)	318 x 381 x 69.6 mm 12.52 x 15.00 x 2.74 in		329 x 484 x 69.6 mm 12.95 x 19.06 x 2.74 in		411 x 485 x 69.6 mm 16.18 x 19.09 x 2.74 in	
Cutout dimensions, approx (H x W)	290 x 353 mm 11.42 x 13.90 in		290 x 418 mm 11.42 x 16.46 in		383 x 457 mm 15.08 x 17.99 in	

(1) Catalog numbers with a -B extension denote terminals that exclude the Allen-Bradley brand marking. Customers can put their own brand labels on these terminals.
(2) DC-powered terminals support safety extra low voltage (SELV) and protective extra low voltage (PELV) 24V DC power supplies such as cat. nos. 1606-XLP95E, 1606-XLP100E, 2711P-RSACDIN.

Product Dimensions

The table provides product dimensions. The 10.4-inch touch and combination keypad with touch devices are shown for illustrative purposes. All other terminal sizes look similar.

PanelView Plus 7 Performance Dimensions - 10.4-in. Model

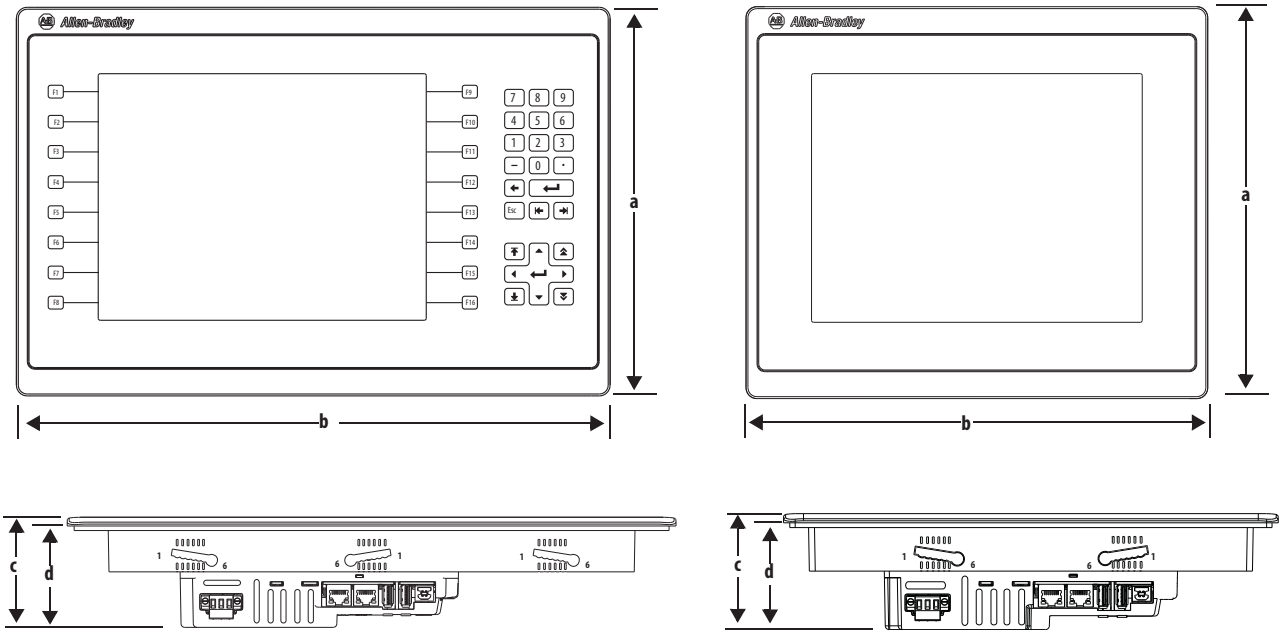

Product Dimensions - PanelView Plus 7 Performance Terminals

Terminal Size	Input Type	Height (a) mm (in.)	Width (b) mm (in.)	Overall Depth (c) mm (in.)	Mounted Depth (d) mm (in.)
6.5-in.	Key/touch	179 (7.05)	285 (11.22)	69.6 (2.74)	63.6 (2.50)
	Touch	170 (6.69)	212 (8.35)		
9-in.	Touch	190 (7.48)	280 (11.02)		
10.4-in.	Key/touch	252 (9.92)	385 (15.16)		
	Touch	252 (9.92)	297 (11.69)		
12.1-in.	Touch	246 (9.69)	340 (13.39)		
15-in.	Key/touch	329 (12.95)	484 (19.06)		
	Touch	318 (12.52)	381 (15.00)		
19-in.	Touch	411 (16.18)	485 (19.09)		

TIP When mounted in a panel, the front of the bezel extends less than 6.36 mm (0.25 in.) from the front of the panel.

Accessories

The tables in this section list accessories for the PanelView Plus 7 Performance terminals.

Protective Overlays

Cat. No.[1]	Display Size	Operator Input	
		Touch	Key and Touch
2711P-RGT7SP	6.5-in.	•	
2711P-RGB7P			•
2711P-RGT9SP	9-in. (wide)	•	
2711P-RGT10SP	10.4-in.	•	
2711P-RGB10P			•
2711P-RGT12SP	12.1-in. (wide)	•	
2711P-RGT15SP	15-in.	•	
2711P-RGB15P			•
2711P-RGT19P	19-in.	•	

(1) Three overlays are shipped with each catalog number.

Power Supplies and Power Terminal Blocks

Cat. No.	Description	Quantity
1606-XLP95E	DIN rail power supply, 24…28V DC output voltage, 95 W	1
1606-XLP100E	DIN rail power supply, 24…28V DC output voltage, 100 W	1
2711P-RSACDIN	DIN rail power supply, AC-to-DC, 85…265V AC, 47…63 Hz	1
2711P-RTBAP	3-pin AC power terminal block	10
2711P-RTBDSP	3-pin DC power terminal block	10

Mounting Hardware

Cat. No.	Description	Quantity
2711P-RMCP[1]	Mounting levers (black)	16

(1) Catalog number 2711P-RMCP mounting levers are used with PanelView Plus 7 Performance terminals. Do not use gray mounting levers; they are not compatible with PanelView Plus 7 Performance terminals.

Secure Digital (SD) Cards

Cat. No.	Description
1784-SD1	1 GB SD card
1784-SD2	2 GB SD card
2711C-RCSD	USB to SD adapter for SD card

Battery Replacement

Cat. No.	Description	Quantity
2711P-RY2032	Lithium coin cell battery, CR2032 equivalent	1

HMI Software

All PanelView Plus 7 terminals are configured with FactoryTalk View Studio software and have an integrated runtime system called FactoryTalk View Machine Edition Station.

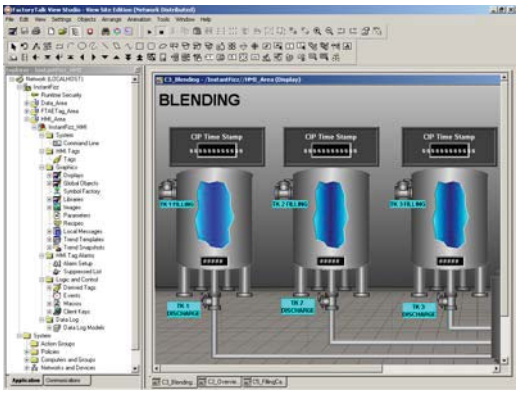

Machine Edition Station runs projects that are developed with FactoryTalk View Studio software and is included on all PanelView Plus 7 terminals.

Two versions of FactoryTalk View Studio software support application development for PanelView Plus 7 terminals.

Cat. No.(1)	Description
9701-VWSTMENE	FactoryTalk View Studio for Machine Edition software - Configuration software for developing and testing machine-level human machine interface (HMI) applications. Includes RSLinx® Enterprise and KEPServer Enterprise software.
9701-VWSTENE	FactoryTalk View Studio software - Configuration software for developing and testing machine-level and supervisory-level human machine interface (HMI) applications.

(1) To order localized versions of the software, replace EN in the catalog number with DE for German, FR for French, JP for Japanese, or ZH for Chinese.

You can import PanelView Standard/PanelBuilder® 32 and PanelView applications into FactoryTalk View Studio software as Machine Edition applications by using the Machine Edition Import Wizard. The Import Wizard steps you through a few options such as scaling to a new screen resolution size, and then converts objects, text, tags, and communication configurations to ones that are available in Machine Edition.

FactoryTalk ViewPoint software, an add-on to FactoryTalk View Studio software, allows plant managers, production supervisors, system integrators, and other key stakeholders to view and control real-time plant floor operations remotely from a web browser. FactoryTalk ViewPoint enabled displays are fully scalable and animated in the browser. The remote user can also view displays that are not the active display of the terminal.

Each PanelView Plus 7 terminal contains one license that supports one client connection to the terminal. No additional software is required.

For a complete list of available HMI software, visit http://www.rockwellautomation.com/rockwellsoftware.

Additional Resources

These documents contain more information about related products from Rockwell Automation.

Resource	Description
PanelView Plus 7 Performance Terminals User Manual, publication 2711P-UM008	Provides instructions on how to install, configure, and operate the PanelView Plus 7 Performance terminals.
Industrial Automation Wiring and Grounding Guidelines, publication 1770-4.1	Provides general guidelines on how to install a Rockwell Automation industrial system.
Product Certifications website, http://www.rockwellautomation.com/global/certification/overview.page	Provides declarations of conformity, certificates, and other certification details.

You can view or download publications at http://www.rockwellautomation.com/global/literature-library/overview.page. To order paper copies of technical documentation, contact your local Allen-Bradley distributor or Rockwell Automation sales representative.

Notes:

Rockwell Automation Support

Use the following resources to access support information.

Technical Support Center	Knowledgebase Articles, How-to Videos, FAQs, Chat, User Forums, and Product Notification Updates.	www.rockwellautomation.com/knowledgebase
Local Technical Support Phone Numbers	Locate the phone number for your country.	www.rockwellautomation.com/global/support/get-support-now.page
Direct Dial Codes	Find the Direct Dial Code for your product. Use the code to route your call directly to a technical support engineer.	www.rockwellautomation.com/global/support/direct-dial.page
Literature Library	Installation Instructions, Manuals, Brochures, and Technical Data.	www.rockwellautomation.com/literature
Product Compatibility and Download Center (PCDC)	Get help determining how products interact, check features and capabilities, and find associated firmware.	www.rockwellautomation.com/global/support/pcdc.page

Documentation Feedback

Your comments will help us serve your documentation needs better. If you have any suggestions on how to improve this document, complete the How Are We Doing? form at http://literature.rockwellautomation.com/idc/groups/literature/documents/du/ra-du002_-en-e.pdf.

Rockwell Automation maintains current product environmental information on its website at http://www.rockwellautomation.com/rockwellautomation/about-us/sustainability-ethics/product-environmental-compliance.page.

Allen-Bradley, CompactLogix, ControlLogix, FactoryTalk, PanelBuilder, PanelView, LISTEN. THINK. SOLVE, Rockwell Automation, Rockwell Software, and RSLinx are trademarks of Rockwell Automation, Inc.
Trademarks not belonging to Rockwell Automation are property of their respective companies.

Rockwell Otomasyon Ticaret A.Ş., Kar Plaza İş Merkezi E Blok Kat:6 34752 İçerenköy, İstanbul, Tel: +90 (216) 5698400

www.rockwellautomation.com

Power, Control and Information Solutions Headquarters

Americas: Rockwell Automation, 1201 South Second Street, Milwaukee, WI 53204-2496 USA, Tel: (1) 414.382.2000, Fax: (1) 414.382.4444
Europe/Middle East/Africa: Rockwell Automation NV, Pegasus Park, De Kleetlaan 12a, 1831 Diegem, Belgium, Tel: (32) 2 663 0600, Fax: (32) 2 663 0640
Asia Pacific: Rockwell Automation, Level 14, Core F, Cyberport 3, 100 Cyberport Road, Hong Kong, Tel: (852) 2887 4788, Fax: (852) 2508 1846

Publication 2711P-TD009C-EN-P - July 2016
Supersedes Publication 2711P-TD009B-EN-P - May 2016

Copyright © 2016 Rockwell Automation, Inc. All rights reserved. Printed in the U.S.A.

Module Description

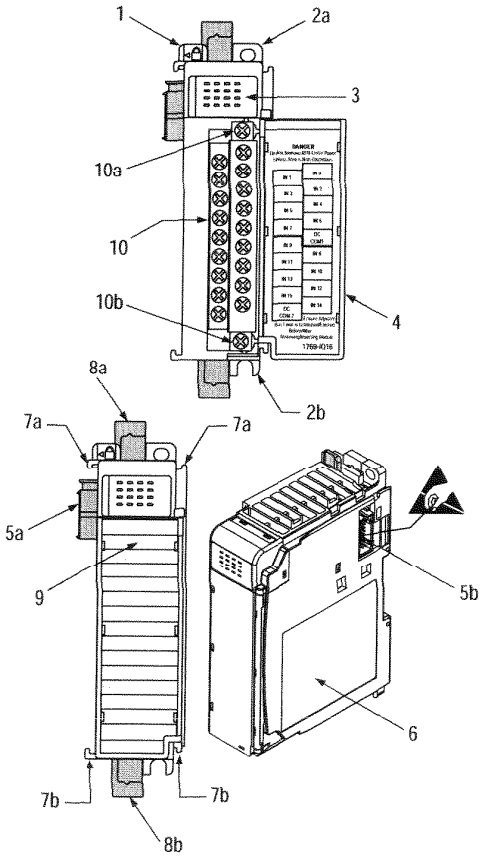

Item	Description
1	bus lever (with locking function)
2a	upper panel mounting tab
2b	lower panel mounting tab
3	I/O diagnostic LEDs
4	module door with terminal identification label
5a	movable bus connector with female pins
5b	stationary bus connector with male pins
6	nameplate label
7a	upper tongue-and-groove slots
7b	lower tongue-and-groove slots
8a	upper DIN rail latch
8b	lower DIN rail latch
9	write-on label (user ID tag)
10	removable terminal block (RTB) with finger-safe cover
10a	RTB upper retaining screw
10b	RTB lower retaining screw

Specifications

General Specifications

Specification	Value
Dimensions	118 mm (height) x 87 mm (depth) x 35 mm (width) height including mounting tabs is 138 mm 4.65 in. (height) x 3.43 in (depth) x 1.38 in (width) height including mounting tabs is 5.43 in.
Approximate Shipping Weight (with carton)	270g (0.6 lbs.)
Storage Temperature	-40°C to +85°C (-40°F to +185°F)
Operating Temperature	0°C to +60°C (32°F to +140°F)
Operating Humidity	5% to 95% non-condensing
Operating Altitude	2000 meters (6561 feet)
Vibration	Operating: 10 to 500 Hz, 5G, 0.030 inches maximum peak-to-peak Relay Operation: 2G
Shock	Operating: 30G panel mounted (20G DIN rail mounted) Relay Operation: 7.5G panel mounted (5G DIN rail mounted) Non-Operating: 40G panel mounted (30G DIN rail mounted)
Agency Certification	• C-UL certified (under CSA C22.2 No. 142) • UL 508 listed • CE compliant for all applicable directives
Hazardous Environment Class	Class I, Division 2, Hazardous Location, Groups A, B, C, D (UL 1604, C-UL under CSA C22.2 No. 213)
Radiated and Conducted Emissions	EN50081-2 Class A
Electrical /EMC:	*The module has passed testing at the following levels:*
• ESD Immunity (IEC1000-4-2)	• 4kV contact, 8 kV air, 4 kV indirect
• Radiated Immunity (IEC1000-4-3)	• 10 V/m, 80 to 1000 MHz, 80% amplitude modulation, +900 MHz keyed carrier
• Fast Transient Burst (IEC1000-4-4)	• 2 kV, 5 kHz
• Surge Immunity (IEC1000-4-5)	• 2 kV common mode, 1 kV differential mode
• Conducted Immunity (IEC1000-4-6)	• 10V, 0.15 to 80 MHz[1]

1. Conducted Immunity frequency range may be 150 kHz to 30 MHz if the Radiated Immunity frequency range is 30 MHz to 1000 MHz.

Input Specifications

Specification	1769-IQ16
Voltage Category	24V dc (sink/source[1])
Operating Voltage Range	10 to 30V dc at 30°C (86°F) 10 to 26.4V dc at 60°C (140°F)
Number of Inputs	16
Bus Current Draw (max.)	115 mA at 5V dc (0.575W)
Heat Dissipation	3.55 Total Watts *(The Watts per point, plus the minimum Watts, with all points energized.)*
Signal Delay (max.)	On Delay: 8.0 ms Off Delay: 8.0 ms
Off-State Voltage (max.)	5V dc
Off-State Current (max.)	1.5 mA
On-State Voltage (min.)	10V dc
On-State Current (min.)	2.0 mA
Inrush Current (max.)	250 mA
Nominal Impedance	3K Ω
IEC Input Compatibility	Type 1+
Power Supply Distance Rating	8 (The module may not be more than 8 modules away from the power supply or controller.)
Input Point to Bus (Compact Bus) Isolation	Verified by one of the following dielectric tests: 1200V ac for 1 sec. or 1697V dc for 1 sec. 75V dc working voltage (IEC Class 2 reinforced insulation)
Isolated Groups	Group 1: inputs 0 to 7 Group 2: inputs 8 to 15 Isolated groups operate in either sink or source configurations.
Input Group to Input Group Isolation	Verified by one of the following dielectric tests: 1200V ac for 1 sec. or 1697V dc for 1 sec. 75V dc working voltage (IEC Class 2 reinforced insulation)
Vendor I.D. Code	1
Product Type Code	7
Product Code	67

1. **Sinking/Sourcing Inputs** - Sourcing/sinking describes the current flow between the I/O module and the field device. Sourcing I/O circuits supply (source) current to sinking field devices. Sinking I/O circuits are driven by a current sourcing field device. Field devices connected to the negative side (DC Common) of the field power supply are sinking field devices. Field devices connected to the positive side (+V) of the field supply are sourcing field devices. *Europe:* DC sinking input and sourcing output module circuits are the commonly used options.

Field Wiring Connections

Grounding the Module

This product is intended to be mounted to a well-grounded mounting surface such as a metal panel. Additional grounding connections from the module's mounting tabs or DIN rail (if used), are not required unless the mounting surface cannot be grounded. Refer to *Industrial Automation Wiring and Grounding Guidelines*, Allen-Bradley publication 1770-4.1, for additional information.

Input Wiring

Basic wiring of input devices[1] to the 1769-IQ16 is shown below.

ATTENTION:

- Miswiring of the module to an AC power source will damage the module.
- Be careful when stripping wires. Wire fragments that fall into a module could cause damage at power up. Once wiring is complete, ensure the module is free of all metal fragments.

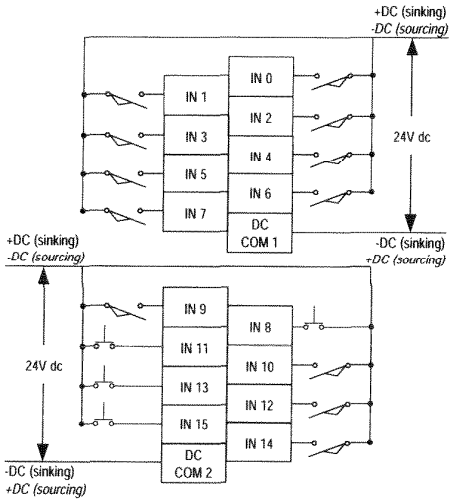

1. **Sinking/Sourcing Inputs** - Sourcing/sinking describes the current flow between the I/O module and the field device. Sourcing I/O circuits supply (source) current to sinking field devices. Sinking I/O circuits are driven by a current sourcing field device. Field devices connected to the negative side (DC Common) of the field power supply are sinking field devices. Field devices connected to the positive side (+V) of the field supply are sourcing field devices. *Europe:* DC sinking input and sourcing output module circuits are the commonly used options.

REVISIONS			
REV.	DESCRIPTION	DATE	APPROVED

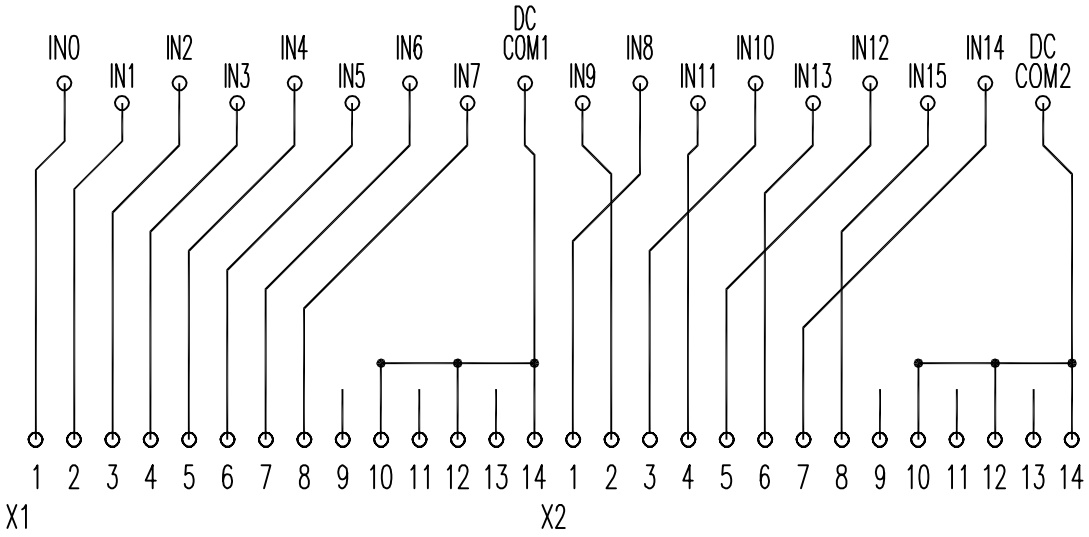

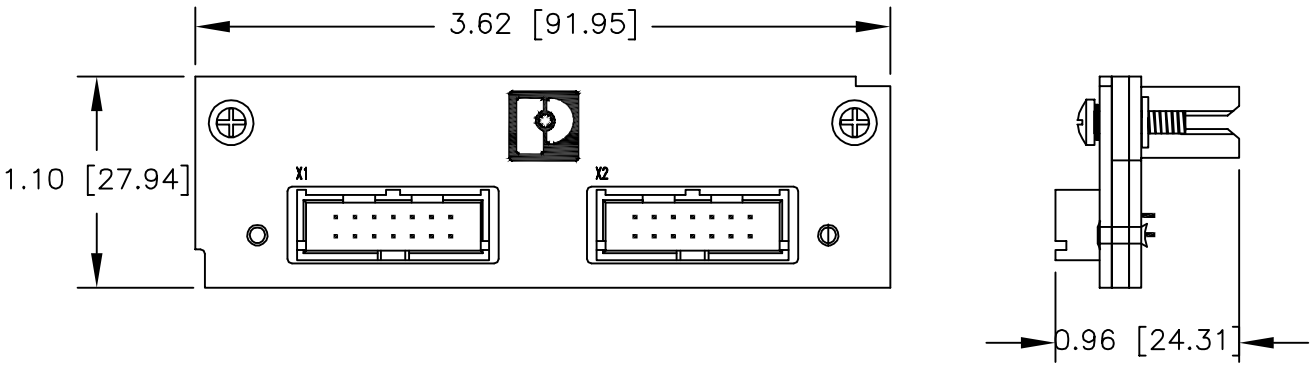

UNLESS OTHERWISE SPECIFIED DIMENSIONS ARE IN INCHES PROJECTION TOLERANCES .XX = ±.01 .XXX = ±.005 ANGLES ±0.5°	APPROVALS	DATE	PHOENIX CONTACT P.O. BOX 4100 HARRISBURG, PA (717) 944-1300 FAX (717) 944-1625
MATERIAL	DRAWN		TITLE FLKM14-PA-AB/ 1769/IN PDF
FINISH	CHECKED		SIZE A / DWG. NO. 2302450 / REV. 0
DO NOT SCALE PRINT	APPROVED		SCALE N/A / SHEET 1/1

Extract from the online catalog

UM 45-FLK14/PLC

Order No.: 2962476

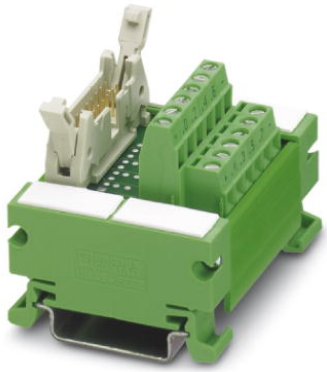

http://eshop.phoenixcontact.ca/phoenix/treeViewClick.do?UID=2962476

VARIOFACE COMPACT LINE, interface module for 8 channels, for assembly on DIN rail NS 35/7.5, screw connection

Product notes

WEEE/RoHS-compliant since: Jul/14/2006

Please note that the data given here has been taken from the online catalog. For comprehensive information and data, please refer to the user documentation at http://www.download.phoenixcontact.com. The General Terms and Conditions of Use apply to Internet downloads.

Commercial data

EAN	4 017918 087173
Pack	1 pcs.
Customs tariff	85369010
Catalog page information	Page 199 (IF-2007)

Technical data

General data

Nominal voltage U_N	25 V AC (50 V DC)
Max. current carrying capacity per branch	1 A
Max. total current of voltage supply	3 A
Number of positions	14
Width	59 mm

Height	45 mm
Depth	50 mm
Ambient temperature (operation)	-20 °C ... 50 °C
Ambient temperature (storage/transport)	-20 °C ... 70 °C
Test voltage	500 V (50 Hz, 1 min.)
Mounting position	Any
Standards/regulations	IEC 60664
	DIN EN 50178
Pollution degree	2
Surge voltage category	II

Connection data for connection 1

Connection name	Field level
Connection method	Screw connection
Conductor cross section solid min.	0.14 mm²
Conductor cross section solid max.	1.5 mm²
Conductor cross section stranded min.	0.14 mm²
Conductor cross section stranded max.	1.5 mm²
Conductor cross section AWG/kcmil min.	26
Conductor cross section AWG/kcmil max	14
Stripping length	6 mm
Screw thread	M3

Certificates

Certification	CUL, GOST, UL

Drawings

Circuit diagram

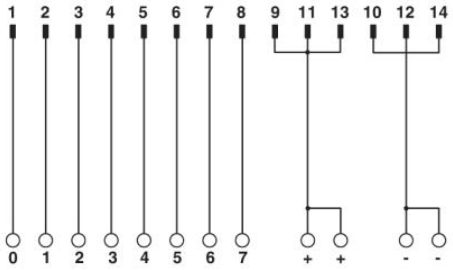

UM 45-FLK14/PLC connection scheme

CPP Item 16
PLC, AB CMPT LOGIX MDL 16DO - Allen Bradley 1769-OB16 / Trojan P/N 913129 - Page 1/4

Module Description

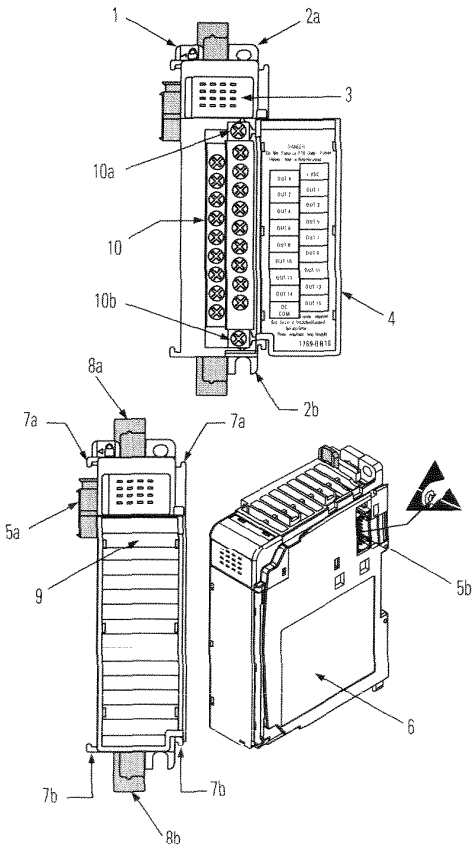

Item	Description
1	bus lever (with locking function)
2a	upper panel mounting tab
2b	lower panel mounting tab
3	I/O diagnostic LEDs
4	module door with terminal identification label
5a	movable bus connector with female pins
5b	stationary bus connector with male pins
6	nameplate label
7a	upper tongue-and-groove slots
7b	lower tongue-and-groove slots
8a	upper DIN rail latch
8b	lower DIN rail latch
9	write on label (user ID tag)
10	removable terminal block (RTB) with finger-safe cover
10a	RTB upper retaining screw
10b	RTB lower retaining screw

CPP Item 16
PLC, AB CMPT LOGIX MDL 16DO - Allen Bradley 1769-OB16 / Trojan P/N 913129 - Page 2/4

Specifications

General Specifications

Specification	Value
Dimensions	118 mm (height) x 87 mm (depth) x 35 mm (width) height including mounting tabs is 138 mm 4.65 in. (height) x 3.43 in (depth) x 1.38 in (width) height including mounting tabs is 5.43 in.
Approximate Shipping Weight (with carton)	280g (0.61 lbs.)
Storage Temperature	-40°C to +85°C (-40°F to +185°F)
Operating Temperature	0°C to +60°C (32°F to +140°F)
Operating Humidity	5% to 95% non-condensing
Operating Altitude	2000 meters (6561 feet)
Vibration	Operating: 10 to 500 Hz, 5G, 0.030 inches maximum peak-to-peak Relay Operation: 2G
Shock	Operating: 30G panel mounted (20G DIN rail mounted) Relay Operation: 7.5G panel mounted (5G DIN rail mounted) Non-Operating: 40G panel mounted (30G DIN rail mounted)
Agency Certification	• C-UL certified (under CSA C22.2 No. 142) • UL 508 listed • CE and C-Tick compliant for all applicable directives
Hazardous Environment Class	Class I, Division 2, Hazardous Location, Groups A, B, C, D (UL 1604, C-UL under CSA C22.2 No. 213)
Radiated and Conducted Emissions	EN50081-2 Class A
Electrical /EMC:	The module has passed testing at the following levels:
ESD Immunity (IEC61000-4-2)	• 4kV contact, 8 kV air, 4 kV indirect
Radiated Immunity (IEC61000-4-3)	• 10 V/m, 80 to 1000 MHz, 80% amplitude modulation, +900 MHz keyed carrier
Fast Transient Burst (IEC61000-4-4)	• 2 kV, 5 kHz
Surge Immunity (IEC61000-4-5)	• 2 kV common mode, 1 kV differential mode
Conducted Immunity (IEC61000-4-6)	• 10V, 0.15 to 80 MHz(1)

(1) Conducted Immunity frequency range may be 150 kHz to 30 MHz if the Radiated Immunity frequency range is 30 MHz to 1000 MHz.

CPP Item 16
PLC, AB CMPT LOGIX MDL 16DO - Allen Bradley 1769-OB16 / Trojan P/N 913129 - Page 3/4

Output Specifications

Specification	1769-OB16
Voltage Category	24V dc
Operating Voltage Range	20.4V dc to 26.4V dc (source[1])
Number of Outputs	16
Bus Current Draw (max.)	200 mA at 5V dc (1.0W)
Heat Dissipation	2.11 Total Watts *(The Watts per point, plus the minimum Watts, with all points energized.)*
Signal Delay (max.) – resistive load	turn-on – 0.1 ms turn-off = 1.0 ms
Off-State Leakage (max.)[2]	1.0 mA at 26.4V dc
On-State Current (min.)	1.0 mA
On-State Voltage Drop (max.)	1.0V dc at 1.0 A
Continuous Current Per Point (max.) See the derating graphs on page 16.	0.5A at 60°C (140°F) 1.0A at 30°C (86°F)
Continuous Current Per Module (max.) See the derating graphs on page 16.	4.0A at 60°C (140°F) 8.0A at 30°C (86°F)
Surge Current (max.)[3]	2.0A (Repeatability is once every 2 seconds for a duration of 10 msec.)
Power Supply Distance Rating	8 (The module may not be more than 8 modules away from the power supply.)
Output Point to Bus Isolation	Verified by one of the following dielectric tests: 1200V ac for 1 sec. or 1697V dc for 1 sec. 75V dc working voltage (IEC Class 2 reinforced insulation)
Isolated Groups	Group 1: outputs 0 to 15 (internally connected to common)
Vendor I.D. Code	1
Product Type Code	7
Product Code	71

(1) Sourcing Output - Source describes the current flow between the I/O module and the field device. Sourcing output circuits supply (source) current to sinking field devices. Field devices connected to the negative side (DC Common) of the field power supply are sinking field devices. Field devices connected to the positive side (+V) of the field supply are sourcing field devices. *Europe:* DC sinking input and sourcing output module circuits are the commonly used options.

(2) **Typical Loading Resistor -** To limit the effects of leakage current through solid state outputs, a loading resistor can be connected in parallel with your load. Use a 5.6K ohm, ½ watt resistor for transistor outputs, 24V dc operation.

(3) Recommended Surge Suppression - Use a 1N4004 diode reverse wired across the load for transistor outputs switching 24V dc inductive loads. For additional details, refer to Industrial Automation Wiring and Grounding Guidelines, Allen-Bradley publication 1770-4.1.

CPP Item 16
PLC, AB CMPT LOGIX MDL 16DO - Allen Bradley 1769-OB16 / Trojan P/N 913129 - Page 4/4

Field Wiring Connections

Grounding the Module

This product is intended to be mounted to a well-grounded mounting surface such as a metal panel. Additional grounding connections from the module's mounting tabs or DIN rail (if used), are not required unless the mounting surface cannot be grounded. Refer to *Industrial Automation Wiring and Grounding Guidelines*, Allen-Bradley publication 1770-4.1, for additional information.

Output Wiring

Basic wiring(1) of output devices(2) to the 1769-OB16 is shown below.

ATTENTION

- Miswiring of the module to an AC power source or applying reverse polarity will damage the module.
- Be careful when stripping wires. Wire fragments that fall into a module could cause damage at power up. Once wiring is complete, ensure the module is free of all metal fragments.

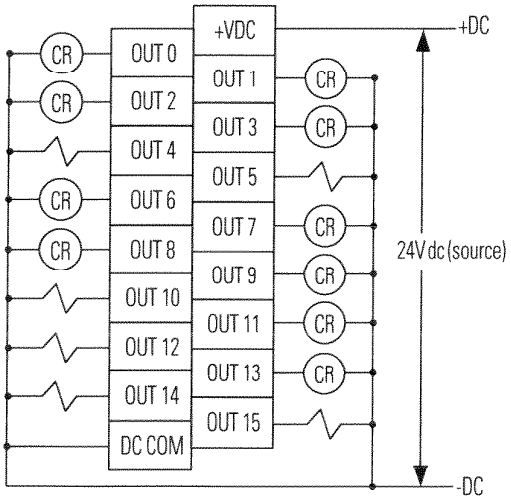

(1) Recommended Surge Suppression - Use a 1N4004 diode reverse-wired across the load for transistor outputs switching 24V dc inductive loads. For additional details, refer to Industrial Automation Wiring and Grounding Guidelines, Allen-Bradley publication 1770-4.1.

(2) Sourcing Output - Source describes the current flow between the I/O module and the field device. Sourcing output circuits supply (source) current to sinking field devices. Field devices connected to the negative side (DC Common) of the field power supply are sinking field devices. Field devices connected to the positive side (+V) of the field supply are sourcing field devices. *Europe:* DC sinking input and sourcing output module circuits are the commonly used options.

REVISIONS

REV.	DESCRIPTION	DATE	APPROVED

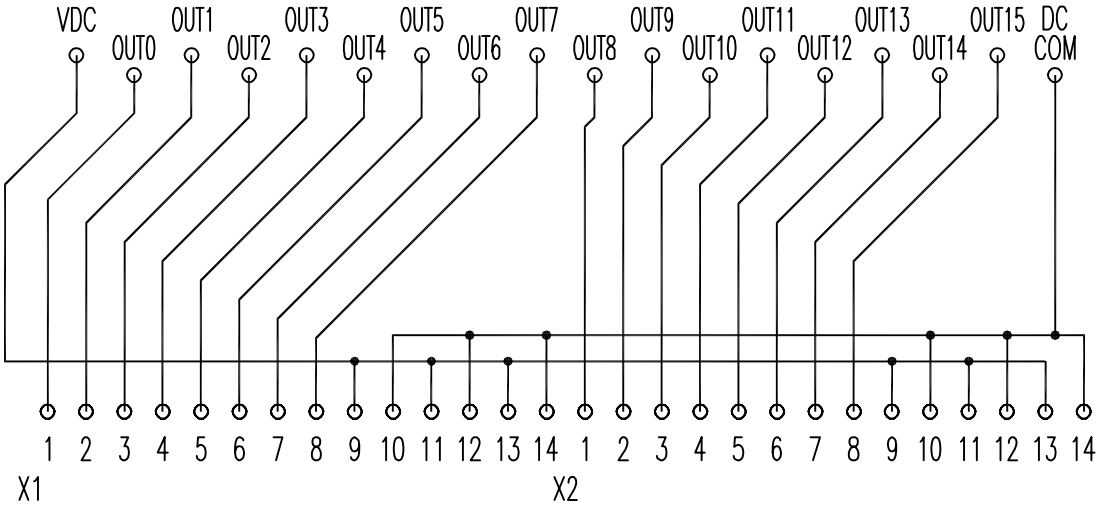

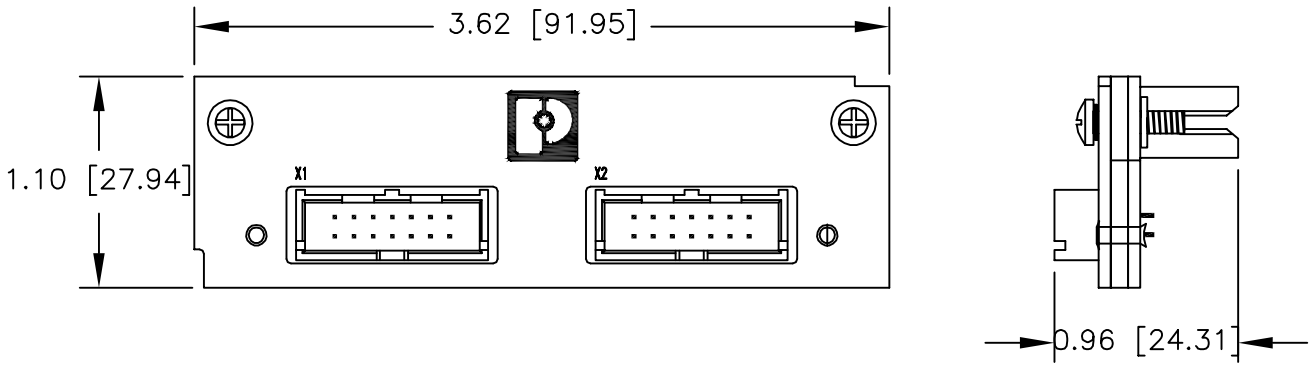

UNLESS OTHERWISE SPECIFIED DIMENSIONS ARE IN INCHES PROJECTION TOLERANCES .XX = ±.01 .XXX = ±.005 ANGLES ±0.5°	APPROVALS	DATE	PHOENIX CONTACT P.O. BOX 4100 HARRISBURG, PA (717) 944-1300 FAX (717) 944-1625
MATERIAL	DRAWN		TITLE FLKM14-PA-AB/ 1769/OUT PDF
FINISH	CHECKED		SIZE A · DWG. NO. 2302463 · REV. 0
DO NOT SCALE PRINT	APPROVED		SCALE N/A · SHEET 1/1

FLK 14/EZ-DR/ 50/KONFEK

Order No.: 2288901

The illustration shows a 50-pos. version

http://eshop.phoenixcontact.ca/phoenix/treeViewClick.do?UID=2288901

Round cable set, with two 14-pos. socket strips (1:1 connection), for connecting 8 channels, cable length: 0.5 m

Commercial data	
EAN	4 017918 057299
Pack	1 pcs.
Customs tariff	85444190
Catalog page information	Page 282 (IF-2011)

Product notes

WEEE/RoHS-compliant since: May/02/2005

Please note that the data given here has been taken from the online catalog. For comprehensive information and data, please refer to the user documentation at http://www.download.phoenixcontact.com. The General Terms and Conditions of Use apply to Internet downloads.

Technical data

General

Nominal voltage U_N	< 50 V AC
	60 V DC
Max. current carrying capacity per path	1 A
Max. conductor resistance	0.16 Ω/m
Ambient temperature (operation)	-20 °C ... 50 °C
Ambient temperature (storage/transport)	-20 °C ... 70 °C

Plug connector, control side	IDC/FLK socket strip (2.54 mm)
Plug connector, module side	IDC/FLK socket strip (2.54 mm)
Fixed cable length	0.5 m
Single wire, cross section	0.14 mm²
AWG	26
Conductor construction: Number of litz wires:	7
Single wire, material	Cu tin-plated
External diameter	6.4 mm
Cable, preassembly	Insulation displacement, IEC 60352-4/DIN EN 60352-4
Shielding	no

Certificates

Certification	CUL, GOST, UL

PLC-V8/FLK14/OUT

Order No.: 2295554

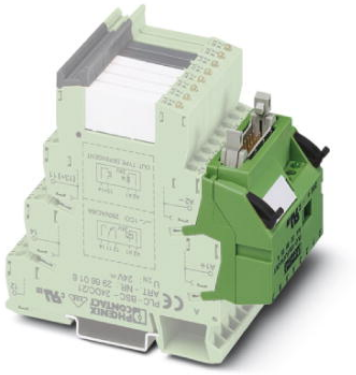

http://catalog.phoenixcontact.net/phoenix/treeViewClick.do?UID=2295554

V8-OUTPUT adapter for eight 6.2 mm PLC interfaces (1 PDT, etc./see "Supplementary Products"). 14-pos. flat-ribbon cable connection for the PLC system cabling, control logic: Plus switching

Commercial data	
EAN	4 017918 189143
sales group	I650
Pack	1 Pcs.
Customs tariff	85369010
Gross weight in pieces	0.058 KG
Net weight per piece	0.0558 KG
Catalog page information	Page 369 (C-7-2013)

Product notes

WEEE/RoHS-compliant since: 01/02/2006

http://www.download.phoenixcontact.com
Please note that the data given here has been taken from the online catalog. For comprehensive information and data, please refer to the user documentation. The General Terms and Conditions of Use apply to Internet downloads.

Technical data

Dimensions

Width	49.6 mm
Height	100 mm
Depth	94 mm

Ambient conditions	
Ambient temperature (operation)	-40 °C ... 70 °C
Ambient temperature (storage/transport)	-40 °C ... 70 °C
General	
Nominal voltage U_N	24 V DC ±25 %
Max. current carrying capacity per branch	1 A (per signal path)
Max. total current of voltage supply	3 A
Number of positions	14
Status display	Green LED
Test voltage	500 V AC (50 Hz, 1 min.)
Mounting position	any
Standards/regulations	IEC 60664
	DIN EN 50178
	IEC 62103
Pollution degree	2
Surge voltage category	III
Rated surge voltage	0.8 kV
Connection data for connection 1	
Connection name	Power supply
Connection in acc. with standard	IEC / EN
Number of connections	1
Connection method	Screw connection
Conductor cross section solid min.	0.2 mm²
Conductor cross section solid max.	4 mm²
Conductor cross section stranded min.	0.2 mm²
Conductor cross section stranded max.	2.5 mm²
Conductor cross section AWG/kcmil min.	24
Conductor cross section AWG/kcmil max	12
Stripping length	8 mm
Screw thread	M3
Connection data for connection 2	
Connection name	Signal level
Number of connections	1
Connection method	IDC/FLK pin strip (2.54 mm)

Number of positions	14
Supported controller	
Controller	SIEMENS S7-400
- suitable I/O card	6ES7 422-1BL00-0AA0
	6ES7 422-7BL00-0AB0
Controller	GE-FANUC 90-30
- suitable I/O card	IC693 MDL732
	IC693 MDL740
	IC693 MDL742
Controller	ALLEN-BRADLEY ControlLogix
- suitable I/O card	1756-OB32
	1756-OB16E
Controller	ALLEN-BRADLEY PLC 5
- suitable I/O card	1771 OBN
Controller	ALLEN-BRADLEY SLC 500
- suitable I/O card	1746 OB16
	1746 OB 32
Controller	HONEYWELL PlantScape
- suitable I/O card	TC-ODD 321
Controller	MITSUBISHI MELSEC Q
- suitable I/O card	QY81P
Controller	SIEMENS S7-300 / ET 200 M
- suitable I/O card	CPU 313C-2DP
	CPU 314C-2DP
	CPU 314C-2PtP
	6ES7 322-1BH01-0AA0
	6ES7 322-1BL00-0AA0
	6ES7 323-1BH01-0AA0
	6ES7 323-1BL00-0AA0
	CPU 313C
	CPU 313C-2PtP
Controller	ABB S800 I/O
- suitable I/O card	DO810
	DO840
Controller	Emerson DeltaV

- suitable I/O card	VE4002S1T1B3
	VE4002S1T2B3
	VE4002S1T2B3 Series 2
	VE4002S1T2B6
Controller	GE-FANUC RX3i
- suitable I/O card	IC694MDL754
Controller	MITSUBISHI MELSEC L
- suitable I/O card	LY41PT1P
	LY42PT1P

Certificates / Approvals

Certification	cULus Listed, cULus Recognized, GOST, GL

Certifications applied for:

Certification Ex:

Relay Module - PLC-RPT- 24DC/21 - 2900299

Please be informed that the data shown in this PDF Document is generated from our Online Catalog. Please find the complete data in the user's documentation. Our General Terms of Use for Downloads are valid (http://phoenixcontact.com/download)

PLC-INTERFACE, consisting of PLC-BPT.../21 basic terminal block with push-in technology and plug-in miniature relay with power contact, for mounting on NS 35/7,5 DIN rails, 1 PDT, input voltage: 24 V DC

Why buy this product

- Slim design
- Efficient connection to system cabling using V8 adapter
- RT III sealed relay
- Safe isolation according to DIN EN 50178 between coil and contact
- Integrated input circuit and interference suppression circuit
- Functional plug-in bridges

Key Commercial Data

Packing unit	1 STK
Weight per Piece (excluding packing)	31.27 g
Custom tariff number	85364100
Country of origin	Germany

Technical data

Note

Utilization restriction	EMC: class A product, see manufacturer's declaration in the download area

Dimensions

Width	6.2 mm
Height	80 mm
Depth	94 mm

Ambient conditions

Ambient temperature (operation)	-40 °C ... 60 °C
Ambient temperature (storage/transport)	-40 °C ... 85 °C

Relay Module - PLC-RPT- 24DC/21 - 2900299

Technical data

Coil side

Nominal input voltage U_N	24 V DC
Typical input current at U_N	9 mA
Typical response time	5 ms
Typical release time	8 ms
Protective circuit	Reverse polarity protection Polarity protection diode
	Free-wheeling diode Damping diode
Operating voltage display	yes
Power dissipation for nominal condition	0.22 W

Contact side

Contact type	1 PDT
Contact material	AgSnO
Maximum switching voltage	250 V AC/DC (The separating plate PLC-ATP should be installed for voltages larger than 250 V (L1, L2, L3) between identical terminal blocks in adjacent modules. Potential bridging is then carried out with FBST 8-PLC... or ...FBST 500...)
Minimum switching voltage	5 V (at 100 mA)
Min. switching current	10 mA (at 12 V)
Maximum inrush current	10 A (4 s)
Limiting continuous current	6 A
Interrupting rating (ohmic load) max.	140 W (at 24 V DC)
	20 W (at 48 V DC)
	18 W (at 60 V DC)
	23 W (at 110 V DC)
	40 W (at 220 V DC)
	1500 VA (for 250 V AC)
Switching capacity in acc. with DIN VDE 0660/IEC 60947	2 A (at 24 V, DC13)
	0.2 A (at 110 V, DC13)
	0.1 A (at 220 V, DC13)
	3 A (at 24 V, AC15)
	3 A (at 120 V, AC15)
	3 A (at 230 V, AC15)

Connection data input side

Connection name	Coil side
Connection method	Push-in connection
Stripping length	8 mm
Conductor cross section solid	0.14 mm² ... 2.5 mm²
Conductor cross section flexible	0.14 mm² ... 2.5 mm²
Conductor cross section AWG	26 ... 14

Connection data output side

Connection name	Contact side

Relay Module - PLC-RPT- 24DC/21 - 2900299

Technical data

Connection data output side

Connection method	Push-in connection
Stripping length	8 mm
Conductor cross section solid	0.14 mm² ... 2.5 mm²
Conductor cross section flexible	0.14 mm² ... 2.5 mm²
Conductor cross section AWG	26 ... 14

General

Test voltage relay winding/relay contact	4 kV AC (50 Hz, 1 min.)
Operating mode	100% operating factor
Degree of protection	RT III (Relay)
Mechanical service life	2 x 10^7 cycles
Flammability rating according to UL 94	V0
Designation	Standards/regulations
Standards/regulations	IEC 60664
	IEC 60664A
	DIN VDE 0110
	DIN EN 50178/DIN VDE 0160 (in relevant parts)
	DIN EN 50178/VDE 0160
	IEC 60255/DIN VDE 0435 (in relevant parts)
Degree of pollution	3
Overvoltage category	III
Mounting position	any
Assembly instructions	In rows with zero spacing

Standards and Regulations

Connection in acc. with standard	CUL
Designation	Standards/regulations
Standards/regulations	IEC 60664
	IEC 60664A
	DIN VDE 0110
	DIN EN 50178/DIN VDE 0160 (in relevant parts)
	DIN EN 50178/VDE 0160
	IEC 60255/DIN VDE 0435 (in relevant parts)
Degree of pollution	3
Overvoltage category	III
Flammability rating according to UL 94	V0

Relay Module - PLC-RPT- 24DC/21 - 2900299

Articles in set

Relay socket - PLC-BPT- 24DC/21 - 2900445

6.2 mm PLC basic terminal block with push-in connection, without relay or solid-state relay, for mounting on DIN rail NS 35/7,5, 1 PDT, input voltage 24 V DC

Single relay - REL-MR- 24DC/21 - 2961105

Plug-in miniature power relay, with power contact, 1 PDT, input voltage 24 V DC

Classifications

eCl@ss

eCl@ss 4.0	27371001
eCl@ss 4.1	27371001
eCl@ss 5.0	27371001
eCl@ss 5.1	27371001
eCl@ss 6.0	27371001
eCl@ss 7.0	27371001
eCl@ss 8.0	27371601
eCl@ss 9.0	27371601

ETIM

ETIM 3.0	EC000196
ETIM 4.0	EC000196
ETIM 5.0	EC001437

UNSPSC

UNSPSC 6.01	30211916
UNSPSC 7.0901	39121515
UNSPSC 11	39121515
UNSPSC 12.01	39121515
UNSPSC 13.2	39121515

Approvals

Approvals

Relay Module - PLC-RPT- 24DC/21 - 2900299

Approvals

Approvals

UL Recognized / UL Listed / cUL Recognized / cUL Listed / GL / EAC / RC FRT / EAC / cULus Recognized / cULus Listed

Ex Approvals

Approvals submitted

Approval details

UL Recognized

UL Listed

cUL Recognized

cUL Listed

GL

EAC

RC FRT

EAC

cULus Recognized

Relay Module - PLC-RPT- 24DC/21 - 2900299

Approvals

cULus Listed

Phoenix Contact 2016 © - all rights reserved
http://www.phoenixcontact.com

1769-IF4

Compact voltage/current analog input module

1769-IF4 Differential Inputs

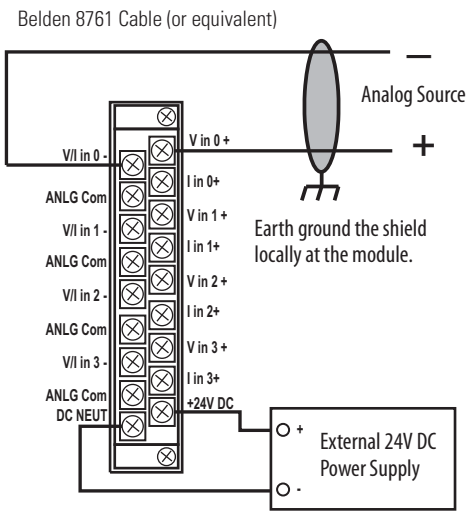

The external power supply must be rated Class 2, with a 24V DC range of 20.4…26.4V DC and 60 mA minimum. Series B and later modules support this option.

1769-IF4 Single-ended Sensor/Transmitter Inputs

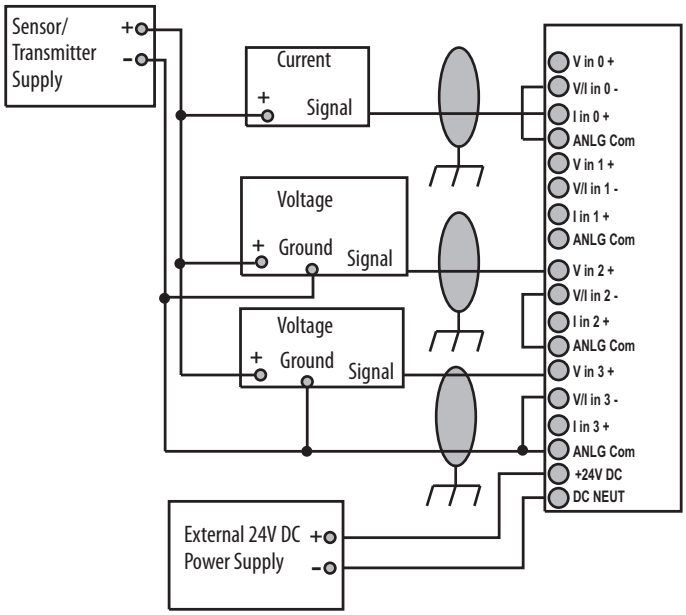

1769-IF4 Mixed Transmitter Inputs

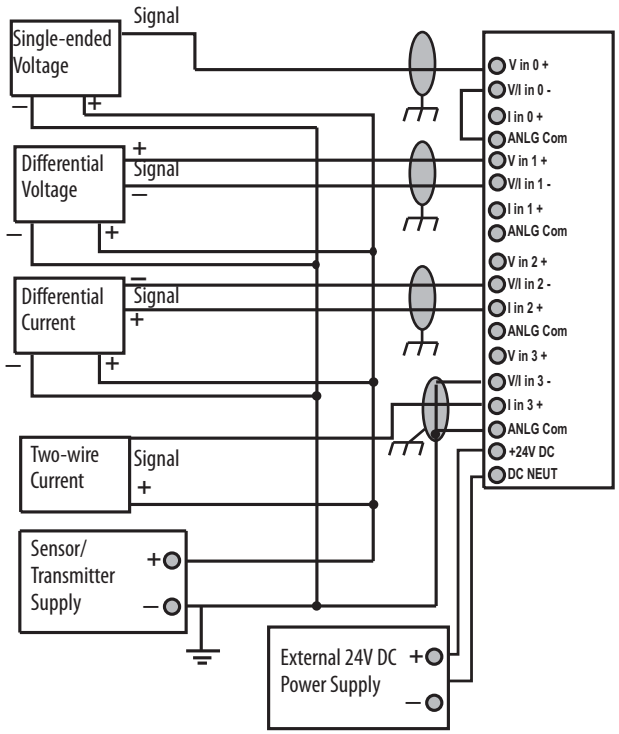

Table 6 - Technical Specifications - 1769-IF4

Attribute	1769-IF4
Inputs	4 differential or single-ended
Input range	±10V 0…10V 0…5V 1…5V 0…20 mA 4…20 mA
Full scale range[1]	±10.5V -0.5…10.5V -0.5…5.25V 0.5…5.25V 0…21 mA 3.2…21 mA
Current draw @ 5.1V	120 mA
Current draw @ 24V	60 mA
Heat dissipation, max	2.52 W
Converter type	Delta Sigma
Resolution [2]	14 bits (unipolar) 14 bits plus sign (bipolar)
Rated working voltage[3]	30V AC/30V DC
Common mode voltage range[4]	±10V DC max per channel
Common mode rejection	> 60 dB @ 50 and 60 Hz with the 50 or 60 Hz filter selected, respectively
Normal mode rejection ratio	-50 dB @ 50 and 60 Hz with the 50 or 60 Hz filter selected, respectively
Input impedance	Voltage: 220 kΩ Current: 250 Ω
Accuracy[5]	Voltage: ±0.2% full scale @ 25 °C (77 °F) Current: ±0.35% full scale @ 25 °C (77 °F)
Accuracy drift with temperature	Voltage: ±0.003% per °C Current: ±0.0045% per °C
Nonlinearity	±0.03%
Repeatability[6]	±0.03%
Module error	Voltage: ±0.3% Current: ±0.5%
Overload at input terminals, max[7]	Voltage: ±30V DC continuous, 0.1 mA Current: ±32 mA continuous, ±7.6V DC
Isolation voltage	500V AC or 710V DC for 1 minute (qualification test), group to bus 30V AC/30V DC working voltage (IEC Class 2 reinforced insulation)
Weight, approx	300 g (0.65 lb)
Dimensions (HxWxD), approx	118 x 35 x 87 mm (4.65 x 1.38 x 3.43 in.) Height with mounting tabs 138 mm (5.43 in.)
Slot width	1
Module location	DIN rail or panel mount
Power supply	1769-PA2, 1769-PB2, 1769-PA4, 1769-PB4
Optional 24V DC Class 2 power supply voltage range[8]	20.4…26.4V DC
Power supply distance rating	8 modules

Table 6 - Technical Specifications - 1769-IF4

Attribute	1769-IF4
Terminal screw torque	0.68 N•m (6 lb•in)
Retaining screw torque	0.46 N•m (4.1 lb•in)
Wire size	(22…14 AWG) solid (22…16 AWG) stranded
Wire type	Cu-90 °C (194 °F)
Replacement terminal block	1769-RTBN18 (1 per kit)
Replacement door label	1769-RL2 series B (2 per kit)
Replacement door	1769-RD (2 per kit)
Vendor ID code	1
Product type code	10
Product code	35
Enclosure type rating	None (open-style)

(1) The over- or under-range flag will come on when the normal operating range (over/under) is exceeded. The module will continue to convert the analog input up to the maximum full scale range. The flag automatically resets when within the normal operating range.

(2) Resolution is dependent upon your filter selection. The maximum resolution is achieved with either the 50 or 60 Hz filter selected.

(3) Rated working voltage is the maximum continuous voltage that can be applied at the input terminal, including the input signal and the value that floats above ground potential (for example, 10V DC input signal and 20V DC potential above ground).

(4) For proper operation, both the plus and minus input terminals must be within ±10V DC of analog common.

(5) Includes offset, gain, nonlinearity, and repeatability error terms.

(6) Repeatability is the ability of the input module to register the same reading in successive measurements for the same input signal.

(7) Damage may occur to the input circuit if this value is exceeded.

(8) If the optional 24V DC Class 2 power supply is used, the 24V DC current draw from the bus is 0 mA.

Table 7 - Response Speed - 1769-IF4

Filter Frequency	Cut-off Frequency	Step Response	Channel Update
50 Hz	13.1 Hz	60 ms	22 ms
60 Hz	15.7 Hz	50 ms	19 ms
250 Hz	65.5 Hz	12 ms	6 ms
500 Hz	131 Hz	6 ms	4 ms

Table 8 - Certifications - 1769-IF4

Certification(1)	1769-IF4
c-UL	C-UL certified (under CSA C22.2 No. 142) UL 508 listed Class I, Division 2 Group A,B,C,D Hazardous Locations (UL 1604, C-UL under CSA C22.2 No. 213)
CE	CE compliant for all applicable directives
C-Tick	AustralianRadiocommunications Act, compliant with: • AS/NZS cispr 11; Industrial Enclosure

(1) When marked. See the Product Certification link at http://www.ab.com for Declarations of Conformity, Certificates, and other certification details.

REVISIONS

REV.	DESCRIPTION	DATE	APPROVED

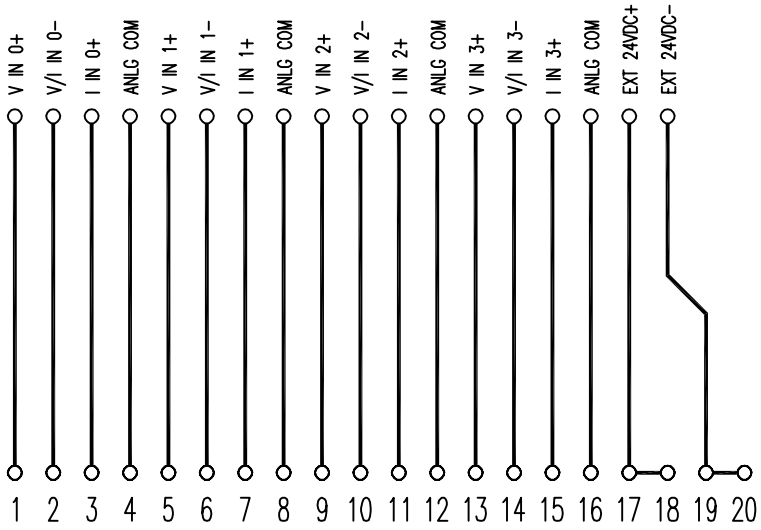

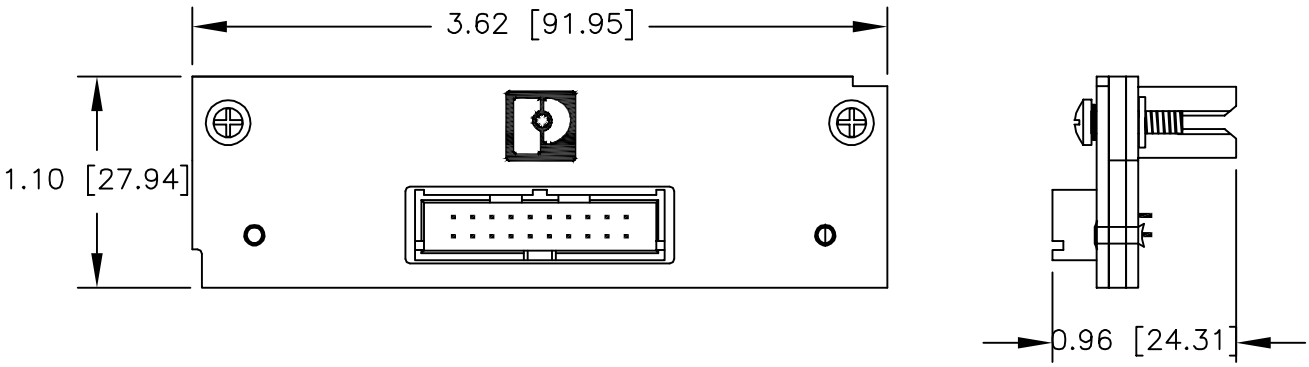

UNLESS OTHERWISE SPECIFIED DIMENSIONS ARE IN INCHES PROJECTION TOLERANCES .XX = ±.01 .XXX = ±.005 ANGLES ±0.5°	APPROVALS	DATE	PHOENIX CONTACT P.O. BOX 4100 HARRISBURG, PA (717) 944–1300 FAX (717) 944–1625
	DRAWN		
MATERIAL	CHECKED		
FINISH	APPROVED		
DO NOT SCALE PRINT			

TITLE
FLKM 20–PA–AB/ 1769/UNI

PDF

SIZE	DWG. NO.	REV.
A	2304461	0
SCALE N/A		SHEET 1/1

Extract from the online catalog

FLK 20/EZ-DR/ 50KONFEK

Order No.: 2296391

http://eshop.phoenixcontact.ca/phoenix/treeViewClick.do?UID=2296391

Round cable set, with 20-position socket strips, 1:1 connection, can be used, for example, for MODICON TSX Micro, Premium, Quantum, no. of positions: 20, cable length 0.5 m

Commercial data	
EAN	4 017918 569235
Pack	1 pcs.
Customs tariff	85444190
Catalog page information	Page 284 (IF-2011)

Product notes

WEEE/RoHS-compliant since: May/02/2005

Please note that the data given here has been taken from the online catalog. For comprehensive information and data, please refer to the user documentation at http://www.download.phoenixcontact.com. The General Terms and Conditions of Use apply to Internet downloads.

Technical data

General

Nominal voltage U_N	< 50 V AC
	60 V DC
Max. current carrying capacity per path	1 A
Max. conductor resistance	0.16 Ω/m
Ambient temperature (operation)	-20 °C ... 50 °C
Ambient temperature (storage/transport)	-20 °C ... 70 °C

Plug connector, control side	IDC/FLK socket strip (2.54 mm)
Plug connector, module side	IDC/FLK socket strip (2.54 mm)
Fixed cable length	0.5 m
Single wire, cross section	0.14 mm²
AWG	26
Conductor construction: Number of litz wires:	7
Single wire, material	Cu tin-plated
External diameter	7.6 mm
Cable, preassembly	Insulation displacement, IEC 60352-4/DIN EN 60352-4
Shielding	no

Certificates

Certification	GOST

FLKM 20

Order No.: 2281047

The illustration shows a 40-position version

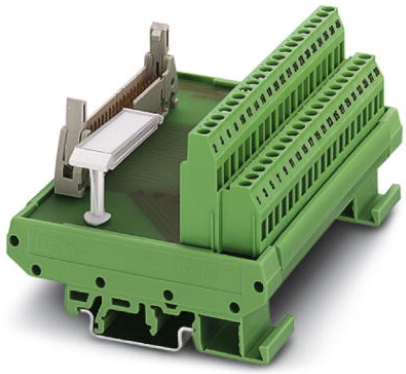

http://eshop.phoenixcontact.ca/phoenix/treeViewClick.do?UID=2281047

VARIOFACE module, with screw connection and flat-ribbon cable plug connector, for mounting on NS 32 or NS 35/7.5, with pin strip and short and long locking latches for socket strips, 20-pos.

Commercial data

EAN	4 017918 054496
Pack	1 pcs.
Customs tariff	85369010
Catalog page information	Page 242 (IF-2007)

Product notes

WEEE/RoHS-compliant since: Mar/31/2006

Please note that the data given here has been taken from the online catalog. For comprehensive information and data, please refer to the user documentation at http://www.download.phoenixcontact.com. The General Terms and Conditions of Use apply to Internet downloads.

Technical data

General data

Nominal voltage U_N	< 50 V AC
	60 V DC
Max. current carrying capacity per branch	1 A
Number of positions	20
Width	56.3 mm
Height	77 mm

Depth	58.5 mm
Status display	No
Ambient temperature (operation)	-20 °C ... 50 °C
Ambient temperature (storage/transport)	-20 °C ... 70 °C
Test voltage	500 V (50 Hz, 1 min.)
Mounting position	Any
Standards/regulations	IEC 60664
	DIN EN 50178
	IEC 62103
Pollution degree	2
Surge voltage category	II

Connection data for connection 1

Connection name	PCB connection
Connection in acc. with standard	IEC / EN
Connection method	Screw connection
Conductor cross section solid min.	0.2 mm²
Conductor cross section solid max.	4 mm²
Conductor cross section stranded min.	0.2 mm²
Conductor cross section stranded max.	2.5 mm²
Conductor cross section AWG/kcmil min.	24
Conductor cross section AWG/kcmil max	12
Stripping length	8 mm
Screw thread	M3

Certificates

Certification	CUL, GOST, UL

CompactLogix 5370 L3 Controller Product Specifications

	1769-L30ER	1769-L30ERM	1769-L30ER-NSE	1769-L33ER	1769-L33ERM	1769-L36ERM
User memory	1 MB	1 MB	1 MB	2 MB	2 MB	3 MB
Controller tasks	32	32	32	32	32	32
Programs per task	100	100	100	100	100	100
Integrated Motion	--	4 axis CIP motion position loop axis	--	--	8 axis CIP motion position loop axis	16 axis CIP motion position loop axis
Package Size	55mm wide x 118mm high x 105mm deep					
Certifications	cULH (Class I Division 2), KCC / UL (UL 508), ULH (Class I & II, Division 2 and Class III, Divisions 1 & 2) / ATEX, CE, C-Tick / Marine and GOST certifications in 2012					
Local Expansion Modules	8	8	8	16	16	30
Local Expansion I/O Points (Max)	256	256	256	512	512	960
Communication Module Additions	DeviceNet with 1769-SDN or 3rd party					
Flash Memory Card	Industrially rated and certified Secure Digital (SD) memory card (1 and 2 GB options); all controllers shipped with 1 GB card					
Servo Drives (Position Loop CIP)	--	4	--	--	8	16
Ethernet I/O IP nodes	16	16	16	32	32	48
Virtual axes	100	100	100	100	100	100
Feedback only, torque, velocity, Vhz (max CIP motion drives)	--	16	--	--	32	48
Axes/ms	--	2	--	--	2	2
Kinematics support	--	yes	--	--	yes	yes
Software / Firmware	RSLogix 5000 V20 and RSLinx Classic V2.59 Firmware v20.1x or later					

CompactLogix, Integrated Architecture, Kinetix, RSLogix, Integrated Motion on EtherNet/IP are trademarks of Rockwell Automation, inc.
Trademarks not belonging to Rockwell Automation are property of their respective companies.

www.rockwellautomation.com

Power, Control and Information Solutions Headquarters

Americas: Rockwell Automation, 1201 South Second Street, Milwaukee, WI 53204-2496 USA, Tel: (1) 414.382.2000, Fax: (1) 414.382.4444
Europe/Middle East/Africa: Rockwell Automation NV, Pegasus Park, De Kleetlaan 12a, 1831 Diegem, Belgium, Tel: (32) 2 663 0600, Fax: (32) 2 663 0640
Asia Pacific: Rockwell Automation, Level 14, Core F, Cyberport 3, 100 Cyberport Road, Hong Kong, Tel: (852) 2887 4788, Fax: (852) 2508 1846

Publication 1769-PP010A-EN-E – November 2011

Copyright © 2011 Rockwell Automation, Inc. All Rights Reserved. Printed in USA.

Rockwell Automation

POWER SUPPLIES

1769 I/O Power Supplies

Each 1769-L3*x* controller and additional bank of I/O modules requires a 1769 power supply. Place 1769 I/O modules to the left or the right of the 1769 power supply. As many as eight I/O modules can be placed on each side of the power supply.

Each 1769 module also has a power supply distance rating (the number of modules from the power supply). Each module must be located within its distance rating. See the specifications for the module to determine its distance rating.

Specifications [PDF]

Cat. No.	Description	Input Voltage Range	Power Supply Output
1769-PA2	Compact 120/220V AC Expansion Power Supply	85…265V AC	2 A at 5V DC 1 A at 24V DC
1769-PB2	Compact 24V DC Expansion Power Supply	19.2…31.2V DC	
1769-PA4	Compact 120/220V AC Expansion Power Supply	85…132V AC or 170…265V AC, switch selectable	4 A at 5V DC 2 A at 24V DC
1769-PB4	Compact 24V DC Expansion Power Supply	19.2…31.2V DC	

Certifications: c-UL-us (Class I, Division 2, Group A, B, C, D), CE, C-Tick
See the Product Certifications link at http://ab.com for Declarations of Conformity, Certifications, and other certifications details.

Copyright © 2012 Rockwell Automation, Inc. All Rights Reserved.

1769-ECR Dimensions, Abmessungen, Dimensioni, Medidas

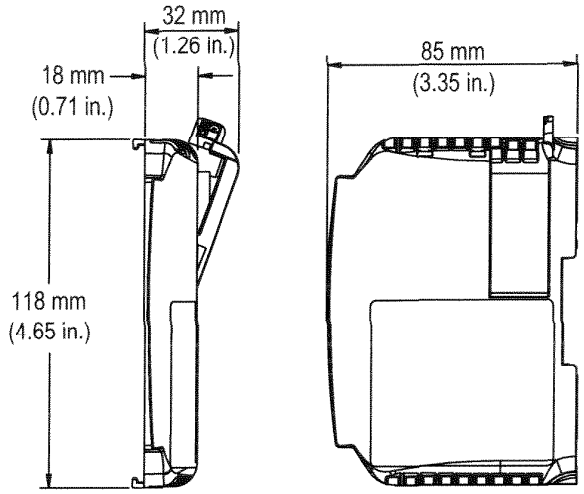

Specifications	
Bus Current Draw (max.)	5 mA at 5V dc
Approximate Shipping Weight (with carton)	130 g (0.286 lbs.)
Storage Temperature	-40°C to +85°C (-40°F to +185°F)
Operating Temperature	0°C to +60°C (32°F to +140°F)
Operating Humidity	5% to 95% non-condensing
Operating Altitude	2000 meters (6561 feet)
Vibration	Operating: 10 to 500 Hz, 5G, 0.030 inches maximum peak-to-peak Relay Operation: 2G
Shock	Operating: 30G panel mounted (20G DIN rail mounted) Relay Operation: 7.5G panel mounted (5G DIN rail mounted) Non-Operating: 40G panel mounted (30G DIN rail mounted)
Agency Certification	C-UL certified (under CSA C22.2 No. 142) UL 508 listed CE compliant for all applicable directives
Hazardous Environment Class	Class I, Division 2, Hazardous Location, Groups A, B, C, D (UL 1604, C-UL under CSA C22.2 No. 213)

1769-ECR Right End Cap

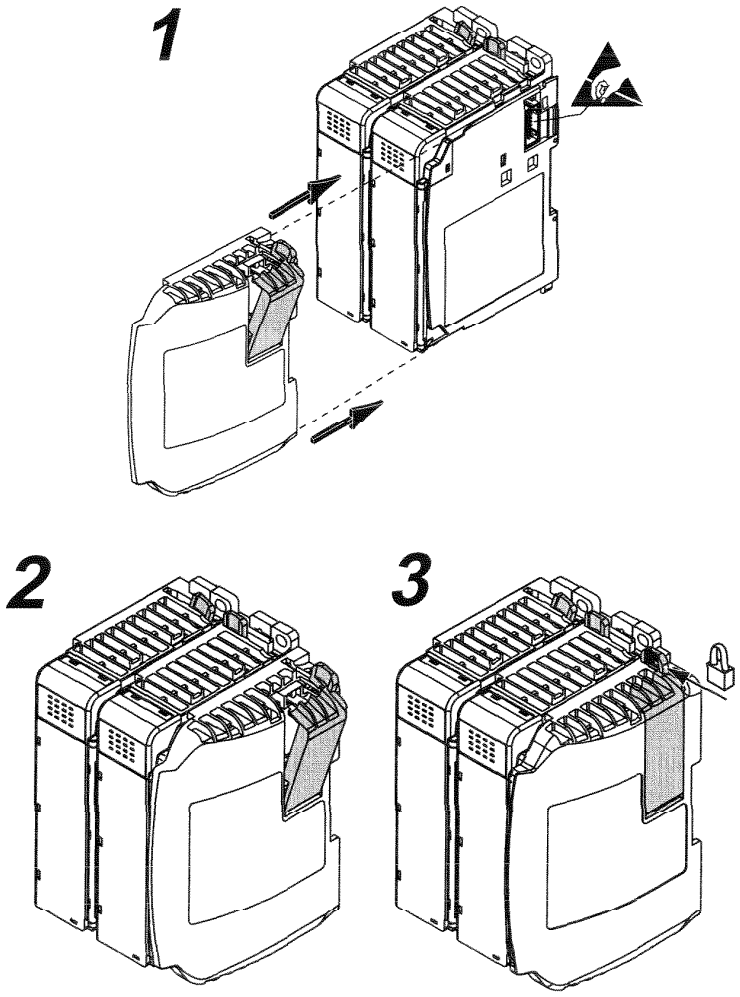

1769-IN015A-ML-P

REV	REVISION DESCRIPTION	LOG NO.	REV'D BY	CHK'D BY	APPRV'D BY	DATE YYYY-MM-DD
A	RELEASE FOR PRODUCTION	22-0467	PSL	FE	PSL	2022-06-03

TABLE OF CONTENTS

SHEET NO.	DESCRIPTION
00	TABLE OF CONTENTS
01	ELECTRICAL - MAIN POWER
02	ELECTRICAL - MAIN POWER
03	ELECTRICAL - 24VDC CONTROLS
04	BCB 1 - BANK CONTROL BOARD CONNECTIONS
05	BCB 2 - BANK CONTROL BOARD CONNECTIONS
06	BCB 3 - BANK CONTROL BOARD CONNECTIONS
07	
08	
09	
10	RACK 1 LAMP DRIVERS
11	RACK 1 LAMP-DRIVER CONNECTIONS
12	RACK 2 LAMP DRIVERS
13	RACK 2 LAMP-DRIVER CONNECTIONS
14	RACK 3 LAMP DRIVERS
15	RACK 3 LAMP-DRIVER CONNECTIONS
16	
17	
18	
19	
20	
21	
22	
23	GROUNDING DETAILS
24	
25	EXTERNAL LAYOUT
26	INTERNAL LAYOUT
27	INTERNAL BOTTOM LAYOUT
28	
29	
30	BACKPLATE LAYOUT
31	
32	
33	SIDE PLATE LAYOUT
34	
35	
36	BOTTOM TERMINAL BLOCK LAYOUT
37	
38	
39	
40	RACK 1 DOOR LAYOUT
41	RACK 2 DOOR LAYOUT
42	RACK 3 DOOR LAYOUT
43	
44	
45	
46	
47	
48	
49	BILL OF MATERIALS
50	LAMICOID BILL OF MATERIALS
51	
52	
53	
54	
55	

WIRE COLOUR CODING LEGEND

DESCRIPTION	DESIGNATION	WIRE
3 PHASE POWER	L1	BLACK
	L2	BLACK
	L3	BLACK
	N	WHITE
DC CONTROL	24VDC	BLUE
	0VDC	WHITE/BLUE
GROUND	G	GREEN/YELLOW
EXTERNAL POWER		YELLOW

NOTE: EXCEPTION TO MANUFACTURER PRE-ASSEMBLED CABLES.

NOTES:

1. ELECTRICAL ASSEMBLY TO BE ASSEMBLED UNDER UL508A AND THE MINIMUM REQUIREMENTS OUTLINED IN ES0127. WHERE THERE IS A CONFLICT BETWEEN THIS DOCUMENT AND THE REQUIREMENTS OF ES0127, THE INFORMATION PRESENTED IN THIS DOCUMENT WILL BE USED.

2. BLANK PAGES ARE RESERVED.

3. ENCLOSURE ENVIRONMENTAL RATING – UL TYPE 4X (IP66)

INTERNAL REFERENCE: ES0685
REV: K

UNLESS OTHERWISE SPECIFIED:
DIMENSIONS ARE IN INCHES
TOLERANCES: 2 PL DEC ± N/A
3 PL DEC ± N/A
ANGLE DEG ± N/A
REMOVE ALL BURRS, ALL CORNERS
R 0.010 OR BREAK EDGE
◇ – CRITICAL CHARACTERISTIC

TROJANUV
3020 GORE ROAD, LONDON, ONTARIO, CANADA, N5V 4T7
COPYRIGHT © TROJAN TECHNOLOGIES, 2022 . ALL RIGHTS RESERVED.

DESCRIPTION: PDC, UVSIGNA EL CENTRO CA
TABLE OF CONTENTS

THIRD ANGLE PROJECTION
0 0.5 1.0
1.0" ON ORIGINAL DWG
SCALE: NTS
DWG NO. 341010G
REV A
SHEET 00 OF 50
SIZE D

CUSTOMER SUPPLY
480/277V, 34A, 27.4kVA, 3PH, 4W+GND, 60HZ
SHORT CIRCUIT CURRENT 10kA RMS SYMMETRICAL @480VAC MAX

N
L1
L2
L3
PE
SUPPLY LIMIT

0109CB
45A

0136 0136 0136 0136
480/277VAC

480/277VAC
0135 0135 0135 0135

0142CB
10A
01420
01430
01440
14AWG
0142PS
L1
L2
L3
PE
24VDC
BLUE 14AWG
0300
0VDC
WH/BU 14AWG
0300

POWER SUPPLY
24VDC, 10A

0148CB
5A
01480
01490
01500
0148AC
L1
L2
L3
PE

AIR CONDITIONER
8000BTU,
480VAC
3.2A

0200 0200 0200 0200
480/277VAC

COPYRIGHT © TROJAN TECHNOLOGIES, 2022 . ALL RIGHTS RESERVED.

TROJAN UV
3020 GORE ROAD, LONDON, ONTARIO, CANADA, N5V 4T7

DESCRIPTION: PDC, UVSIGNA EL CENTRO CA
ELECTRICAL – MAIN POWER

REVISED BY	PSL	DWG NO.	REV
CHECKED BY	FE	341010G	A
APPROVED BY	PSL		
APPROVAL DATE (YYYY-MM-DD)	2022-06-03	SHEET 01 OF 50	SIZE D

0 0.5 1.0
1.0" ON ORIGINAL DWG
SCALE: NTS

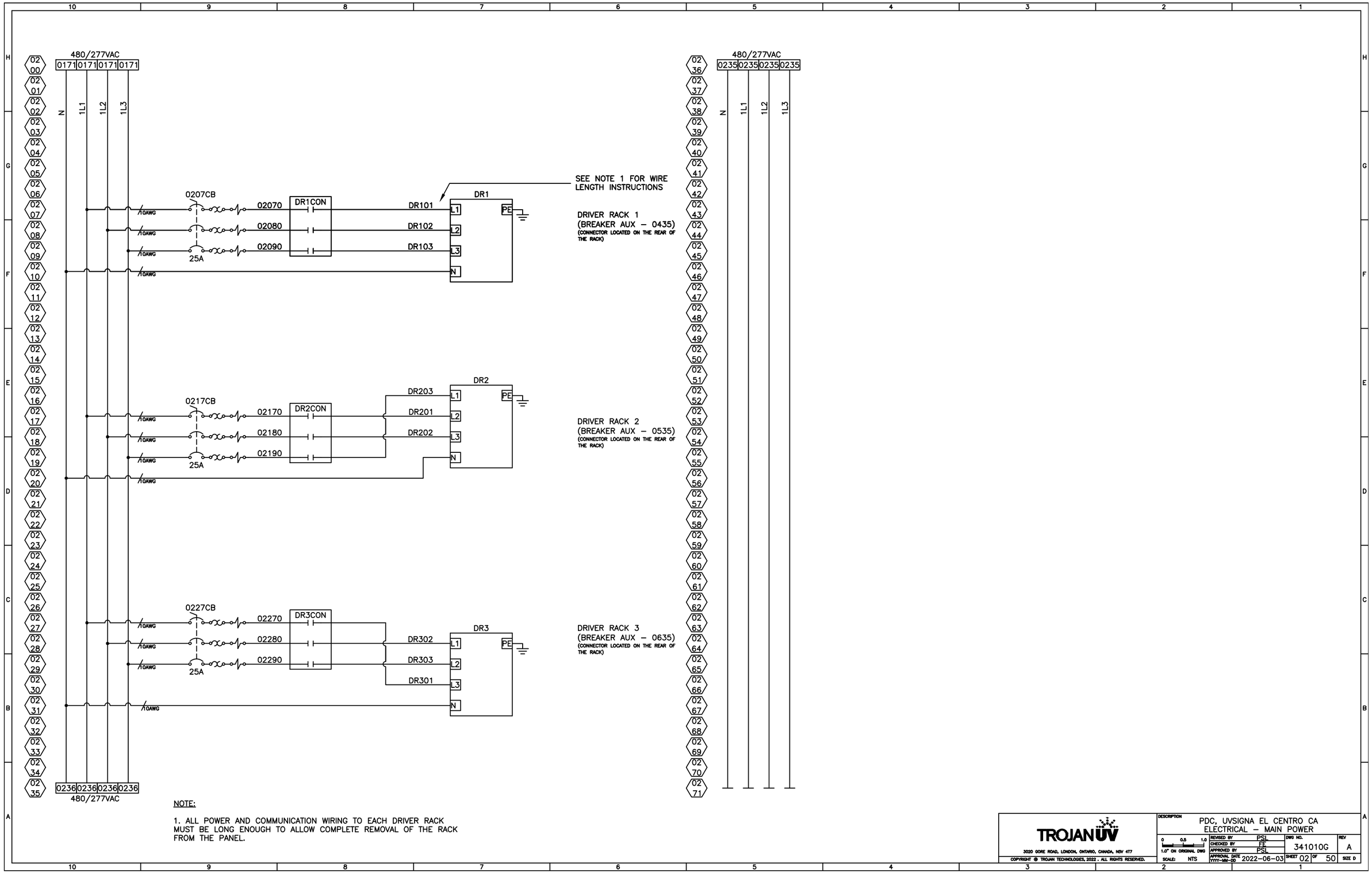
480/277VAC
0171 0171 0171 0171
N
1L1
1L2
1L3
0207CB
02070
02080
02090
25A
10AWG
DR1CON
DR101
DR102
DR103
DR1
L1
L2
L3
N
PE
SEE NOTE 1 FOR WIRE LENGTH INSTRUCTIONS
DRIVER RACK 1
(BREAKER AUX – 0435)
(CONNECTOR LOCATED ON THE REAR OF THE RACK)
0217CB
02170
02180
02190
DR2CON
DR203
DR201
DR202
DR2
DRIVER RACK 2
(BREAKER AUX – 0535)
(CONNECTOR LOCATED ON THE REAR OF THE RACK)
0227CB
02270
02280
02290
DR3CON
DR302
DR303
DR301
DR3
DRIVER RACK 3
(BREAKER AUX – 0635)
(CONNECTOR LOCATED ON THE REAR OF THE RACK)
0236 0236 0236 0236
480/277VAC
0235 0235 0235 0235
NOTE:
1. ALL POWER AND COMMUNICATION WIRING TO EACH DRIVER RACK MUST BE LONG ENOUGH TO ALLOW COMPLETE REMOVAL OF THE RACK FROM THE PANEL.
TROJANUV
3020 GORE ROAD, LONDON, ONTARIO, CANADA, N5V 4T7
COPYRIGHT © TROJAN TECHNOLOGIES, 2022 . ALL RIGHTS RESERVED.
DESCRIPTION
PDC, UVSIGNA EL CENTRO CA
ELECTRICAL – MAIN POWER
REVISED BY PSL
CHECKED BY FE
APPROVED BY PSL
APPROVAL DATE YYYY-MM-DD 2022-06-03
DWG NO. 341010G
REV A
SHEET 02 OF 50
SIZE D
SCALE: NTS
1.0" ON ORIGINAL DWG

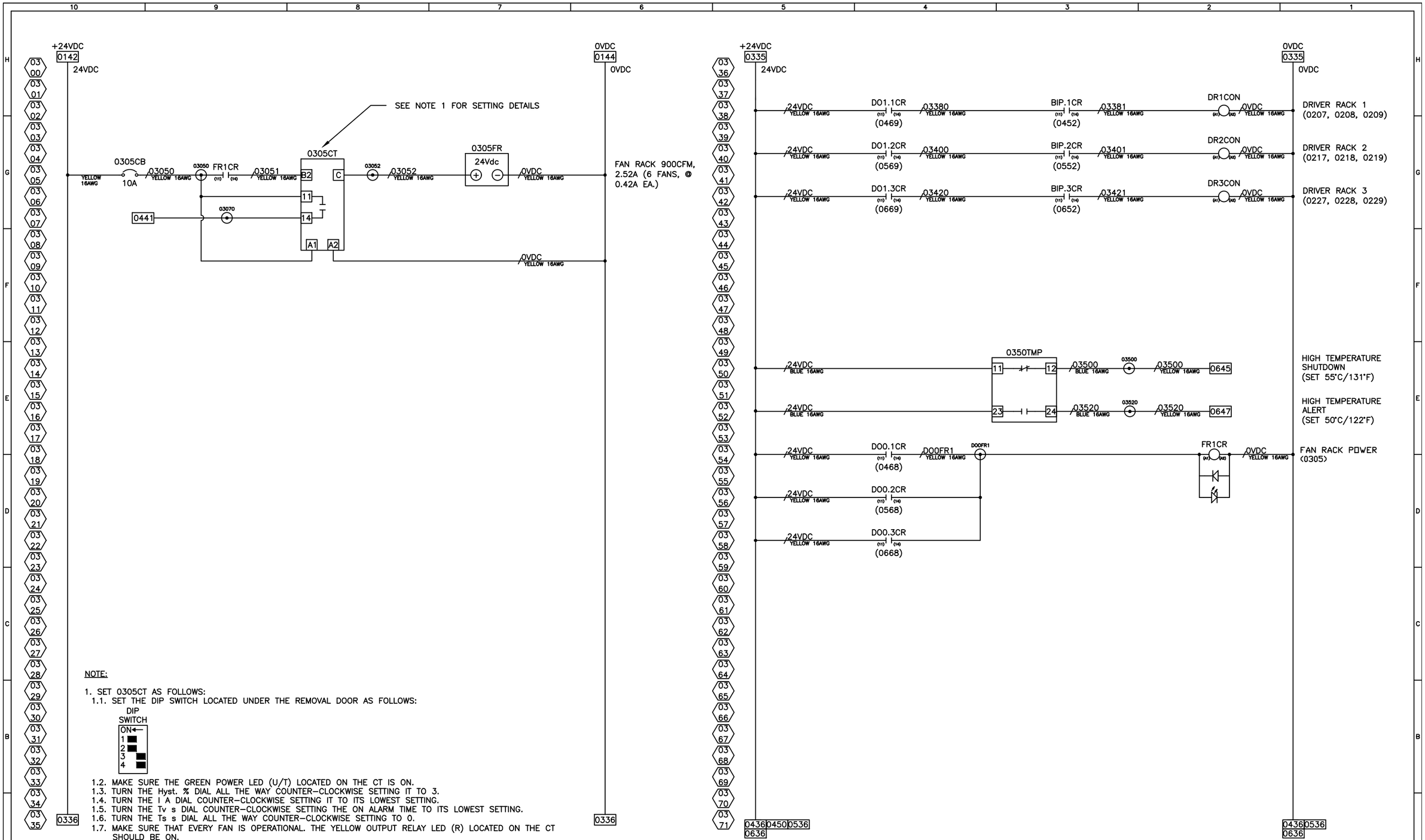

NOTE:

1. SET 0305CT AS FOLLOWS:
   1.1. SET THE DIP SWITCH LOCATED UNDER THE REMOVAL DOOR AS FOLLOWS:

DIP SWITCH

ON←	
1	■
2	■
3	■
4	■

   1.2. MAKE SURE THE GREEN POWER LED (U/T) LOCATED ON THE CT IS ON.
   1.3. TURN THE Hyst. % DIAL ALL THE WAY COUNTER-CLOCKWISE SETTING IT TO 3.
   1.4. TURN THE I A DIAL COUNTER-CLOCKWISE SETTING IT TO ITS LOWEST SETTING.
   1.5. TURN THE Tv s DIAL COUNTER-CLOCKWISE SETTING THE ON ALARM TIME TO ITS LOWEST SETTING.
   1.6. TURN THE Ts s DIAL ALL THE WAY COUNTER-CLOCKWISE SETTING TO 0.
   1.7. MAKE SURE THAT EVERY FAN IS OPERATIONAL. THE YELLOW OUTPUT RELAY LED (R) LOCATED ON THE CT SHOULD BE ON.
   1.8. SLOWLY TURN THE I A DIAL CLOCKWISE STOPPING WHEN THE RED ALARM LED TURNS ON.
   1.9. SLOWLY TURN THE I A DIAL COUNTER-CLOCKWISE UNTIL THE RED ALARM LED TURNS OFF.
   1.10. SLOWLY TURN THE I A DIAL COUNTER-CLOCKWISE ANOTHER 5%, SETTING THE CURRENT LEVEL.
   1.11. SET THE Hyst. % DIAL TO 6%.
   1.12. SET THE Tv s DIAL TO 10 SECONDS.

TROJANUV
3020 GORE ROAD, LONDON, ONTARIO, CANADA, N5V 4T7
COPYRIGHT © TROJAN TECHNOLOGIES, 2022 . ALL RIGHTS RESERVED.

DESCRIPTION: PDC, UVSIGNA EL CENTRO CA
ELECTRICAL – 24VDC CONTROLS

REVISED BY	PSL	DWG NO.	REV
CHECKED BY	FE	341010G	A
APPROVED BY	PSL		
APPROVAL DATE (YYYY-MM-DD)	2022-06-03	SHEET 03 OF 50	SIZE D

0 0.5 1.0
1.0" ON ORIGINAL DWG
SCALE: NTS

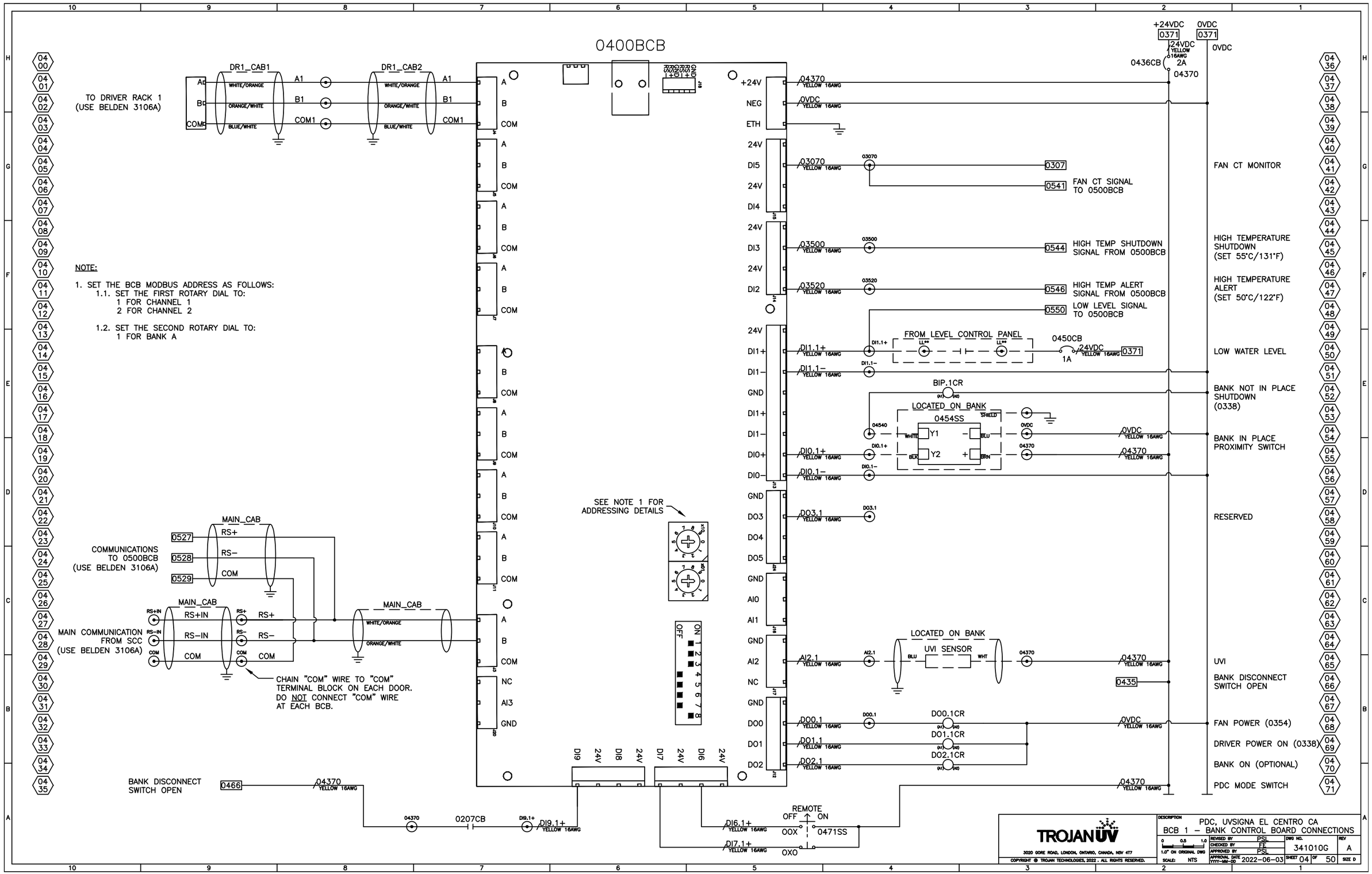
0400BCB
TO DRIVER RACK 1
(USE BELDEN 3106A)
DR1_CAB1
DR1_CAB2
WHITE/ORANGE
ORANGE/WHITE
BLUE/WHITE
A1
B1
COM1
NOTE:
1. SET THE BCB MODBUS ADDRESS AS FOLLOWS:
1.1. SET THE FIRST ROTARY DIAL TO:
1 FOR CHANNEL 1
2 FOR CHANNEL 2
1.2. SET THE SECOND ROTARY DIAL TO:
1 FOR BANK A
COMMUNICATIONS
TO 0500BCB
(USE BELDEN 3106A)
MAIN_CAB
RS+
RS−
COM
MAIN COMMUNICATION
FROM SCC
(USE BELDEN 3106A)
RS+IN
RS−IN
CHAIN "COM" WIRE TO "COM"
TERMINAL BLOCK ON EACH DOOR.
DO NOT CONNECT "COM" WIRE
AT EACH BCB.
SEE NOTE 1 FOR
ADDRESSING DETAILS
BANK DISCONNECT
SWITCH OPEN
0466
04370
YELLOW 16AWG
0207CB
DI9.1+
DI9
DI8
DI7
DI6
DI6.1+
DI7.1+
REMOTE
OFF
ON
OOX
OXO
0471SS
+24V
NEG
ETH
24V
DI5
DI4
DI3
DI2
DI1+
DI1−
GND
DI0+
DI0−
DO3
DO4
DO5
AI0
AI1
AI2
NC
DO0
DO1
DO2
04370
0VDC
03070
0307
0541
FAN CT SIGNAL
TO 0500BCB
03500
0544
HIGH TEMP SHUTDOWN
SIGNAL FROM 0500BCB
03520
0546
HIGH TEMP ALERT
SIGNAL FROM 0500BCB
0550
LOW LEVEL SIGNAL
TO 0500BCB
FROM LEVEL CONTROL PANEL
0450CB
1A
DI1.1+
DI1.1−
BIP.1CR
LOCATED ON BANK
0454SS
Y1
Y2
DI0.1+
DI0.1−
DO3.1
LOCATED ON BANK
UVI SENSOR
AI2.1
0435
DO0.1
DO0.1CR
DO1.1
DO1.1CR
DO2.1
DO2.1CR
+24VDC
0371
0VDC
0436CB
2A
FAN CT MONITOR
HIGH TEMPERATURE
SHUTDOWN
(SET 55°C/131°F)
HIGH TEMPERATURE
ALERT
(SET 50°C/122°F)
LOW WATER LEVEL
BANK NOT IN PLACE
SHUTDOWN
(0338)
BANK IN PLACE
PROXIMITY SWITCH
RESERVED
UVI
BANK DISCONNECT
SWITCH OPEN
FAN POWER (0354)
DRIVER POWER ON (0338)
BANK ON (OPTIONAL)
PDC MODE SWITCH
TROJAN UV
3020 GORE ROAD, LONDON, ONTARIO, CANADA, N5V 4T7
COPYRIGHT © TROJAN TECHNOLOGIES, 2022. ALL RIGHTS RESERVED.
DESCRIPTION
PDC, UVSIGNA EL CENTRO CA
BCB 1 – BANK CONTROL BOARD CONNECTIONS
REVISED BY PSL
CHECKED BY FE
APPROVED BY PSL
APPROVAL DATE YYYY-MM-DD 2022-06-03
DWG NO. 341010G
REV A
SCALE: NTS
SHEET 04 OF 50
SIZE D

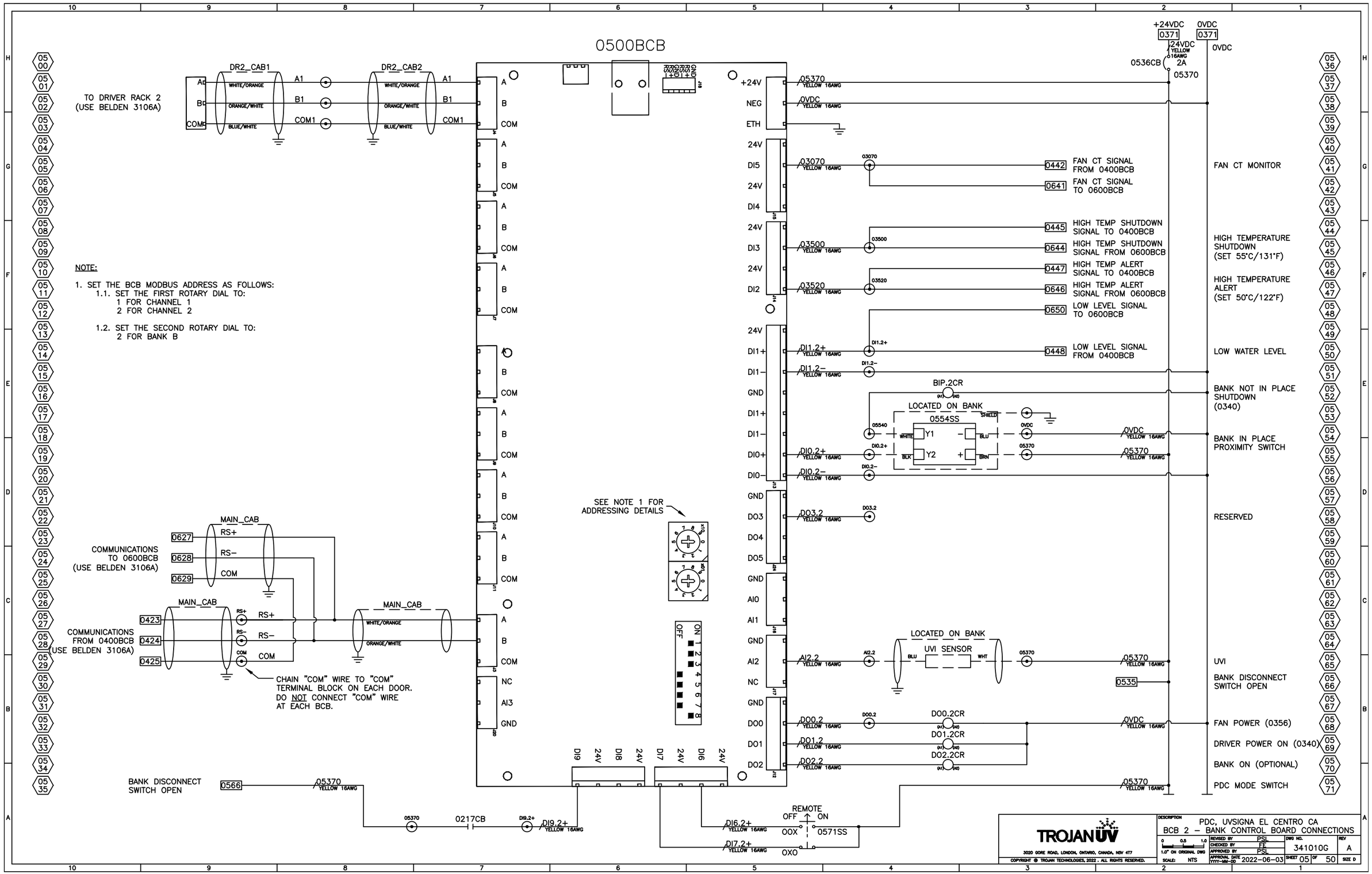
0500BCB
TO DRIVER RACK 2
(USE BELDEN 3106A)
DR2_CAB1
DR2_CAB2
WHITE/ORANGE
ORANGE/WHITE
BLUE/WHITE
A1
B1
COM1
NOTE:
1. SET THE BCB MODBUS ADDRESS AS FOLLOWS:
1.1. SET THE FIRST ROTARY DIAL TO:
1 FOR CHANNEL 1
2 FOR CHANNEL 2
1.2. SET THE SECOND ROTARY DIAL TO:
2 FOR BANK B
MAIN_CAB
COMMUNICATIONS
TO 0600BCB
(USE BELDEN 3106A)
0627
0628
0629
RS+
RS−
COM
COMMUNICATIONS
FROM 0400BCB
(USE BELDEN 3106A)
0423
0424
0425
CHAIN "COM" WIRE TO "COM"
TERMINAL BLOCK ON EACH DOOR.
DO NOT CONNECT "COM" WIRE
AT EACH BCB.
SEE NOTE 1 FOR
ADDRESSING DETAILS
BANK DISCONNECT
SWITCH OPEN
0566
05370
0217CB
DI9.2+
REMOTE
OFF ON
00X
0571SS
OXO
+24VDC
0VDC
0371
0536CB
2A
05370
+24V
NEG
ETH
24V
DI5
DI4
DI3
DI2
DI1+
DI1−
GND
DO3
DO4
DO5
AI0
AI1
AI2
NC
AI3
DO0
DO1
DO2
03070
03500
03520
DI1.2+
DI1.2−
DI0.2+
DI0.2−
DO3.2
AI2.2
DO0.2
DO1.2
DO2.2
0442
FAN CT SIGNAL
FROM 0400BCB
0641
FAN CT SIGNAL
TO 0600BCB
FAN CT MONITOR
0445
HIGH TEMP SHUTDOWN
SIGNAL TO 0400BCB
0644
HIGH TEMP SHUTDOWN
SIGNAL FROM 0600BCB
HIGH TEMPERATURE
SHUTDOWN
(SET 55°C/131°F)
0447
HIGH TEMP ALERT
SIGNAL TO 0400BCB
0646
HIGH TEMP ALERT
SIGNAL FROM 0600BCB
HIGH TEMPERATURE
ALERT
(SET 50°C/122°F)
0650
LOW LEVEL SIGNAL
TO 0600BCB
0448
LOW LEVEL SIGNAL
FROM 0400BCB
LOW WATER LEVEL
BIP.2CR
LOCATED ON BANK
0554SS
05540
Y1
Y2
SHIELD
BANK NOT IN PLACE
SHUTDOWN
(0340)
BANK IN PLACE
PROXIMITY SWITCH
RESERVED
LOCATED ON BANK
UVI SENSOR
UVI
0535
BANK DISCONNECT
SWITCH OPEN
DO0.2CR
DO1.2CR
DO2.2CR
FAN POWER (0356)
DRIVER POWER ON (0340)
BANK ON (OPTIONAL)
PDC MODE SWITCH
TROJANUV
3020 GORE ROAD, LONDON, ONTARIO, CANADA, N5V 4T7
COPYRIGHT © TROJAN TECHNOLOGIES, 2022 . ALL RIGHTS RESERVED.
PDC, UVSIGNA EL CENTRO CA
BCB 2 – BANK CONTROL BOARD CONNECTIONS
REVISED BY PSL
CHECKED BY FF
APPROVED BY PSL
APPROVAL DATE 2022-06-03
DWG NO. 341010G
REV A
SHEET 05 OF 50
SIZE D
SCALE: NTS
1.0" ON ORIGINAL DWG

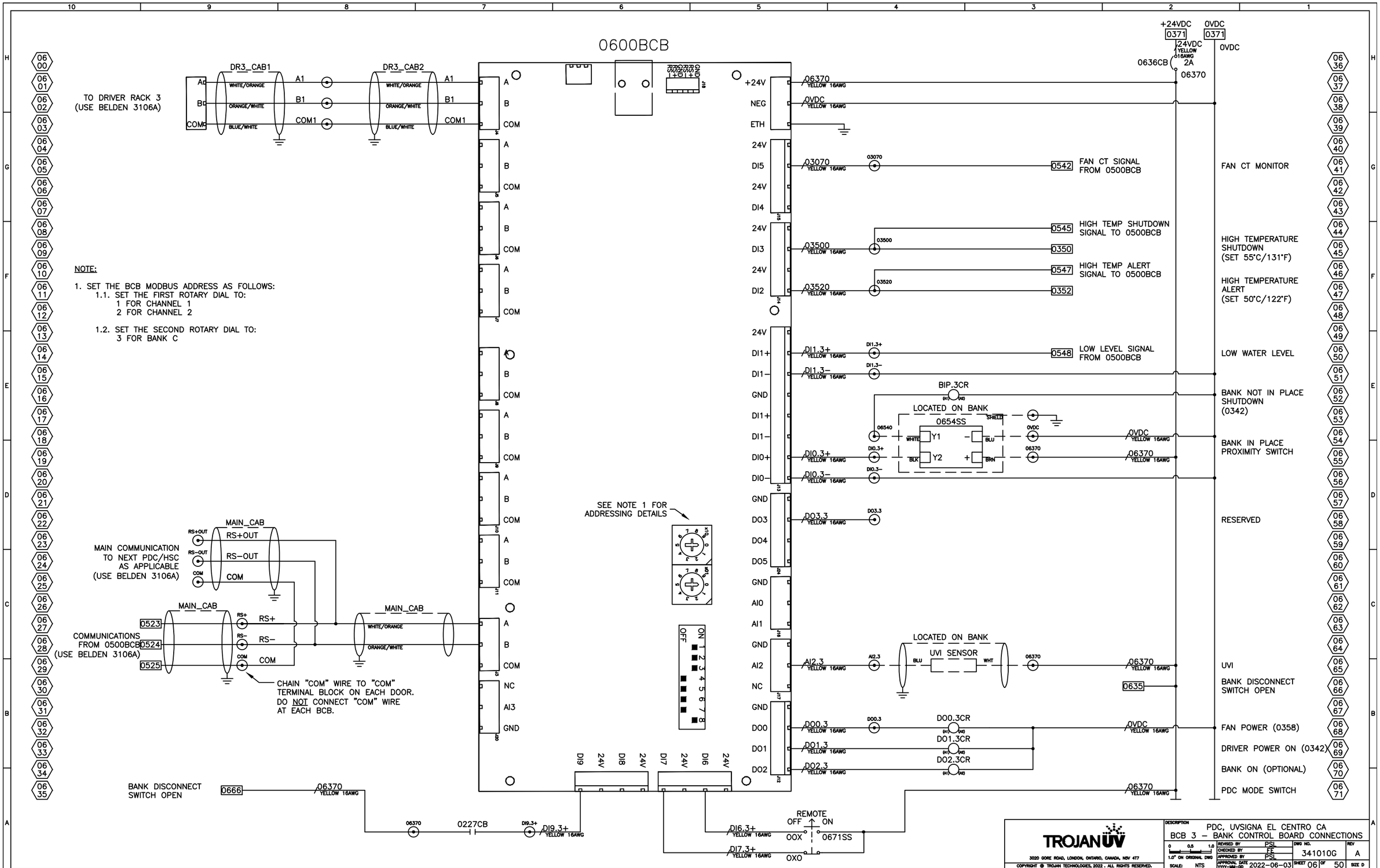
0600BCB
TO DRIVER RACK 3
(USE BELDEN 3106A)
DR3_CAB1
DR3_CAB2
WHITE/ORANGE
ORANGE/WHITE
BLUE/WHITE
A1
B1
COM1
NOTE:
1. SET THE BCB MODBUS ADDRESS AS FOLLOWS:
1.1. SET THE FIRST ROTARY DIAL TO:
1 FOR CHANNEL 1
2 FOR CHANNEL 2
1.2. SET THE SECOND ROTARY DIAL TO:
3 FOR BANK C
MAIN COMMUNICATION
TO NEXT PDC/HSC
AS APPLICABLE
(USE BELDEN 3106A)
MAIN_CAB
RS+OUT
RS-OUT
COM
COMMUNICATIONS
FROM 0500BCB
(USE BELDEN 3106A)
0523
0524
0525
RS+
RS-
CHAIN "COM" WIRE TO "COM"
TERMINAL BLOCK ON EACH DOOR.
DO NOT CONNECT "COM" WIRE
AT EACH BCB.
BANK DISCONNECT
SWITCH OPEN
0666
06370
YELLOW 16AWG
0227CB
DI9.3+
DI9 24V DI8 24V DI7 24V DI6 24V
SEE NOTE 1 FOR
ADDRESSING DETAILS
ON
OFF
+24V
NEG
ETH
24V
DI5
DI4
DI3
DI2
DI1+
DI1-
GND
DI0+
DI0-
DO3
DO4
DO5
AI0
AI1
AI2
NC
DO0
DO1
DO2
06370
0VDC
03070
03500
03520
DI1.3+
DI1.3-
DI0.3+
DI0.3-
DO3.3
AI2.3
DO0.3
DO1.3
DO2.3
DI6.3+
DI7.3+
REMOTE
OFF
ON
OOX
0671SS
OXO
0542
FAN CT SIGNAL
FROM 0500BCB
0545
HIGH TEMP SHUTDOWN
SIGNAL TO 0500BCB
0350
0547
HIGH TEMP ALERT
SIGNAL TO 0500BCB
0352
0548
LOW LEVEL SIGNAL
FROM 0500BCB
BIP.3CR
LOCATED ON BANK
0654SS
Y1
Y2
SHIELD
WHITE
BLU
BLK
BRN
LOCATED ON BANK
UVI SENSOR
WHT
DO0.3CR
DO1.3CR
DO2.3CR
+24VDC
0371
0VDC
0636CB
2A
FAN CT MONITOR
HIGH TEMPERATURE
SHUTDOWN
(SET 55°C/131°F)
HIGH TEMPERATURE
ALERT
(SET 50°C/122°F)
LOW WATER LEVEL
BANK NOT IN PLACE
SHUTDOWN
(0342)
BANK IN PLACE
PROXIMITY SWITCH
RESERVED
UVI
BANK DISCONNECT
SWITCH OPEN
0635
FAN POWER (0358)
DRIVER POWER ON (0342)
BANK ON (OPTIONAL)
PDC MODE SWITCH
TROJAN UV
3020 GORE ROAD, LONDON, ONTARIO, CANADA, N5V 4T7
COPYRIGHT © TROJAN TECHNOLOGIES, 2022. ALL RIGHTS RESERVED.
DESCRIPTION
PDC, UVSIGNA EL CENTRO CA
BCB 3 – BANK CONTROL BOARD CONNECTIONS
REVISED BY PSL
CHECKED BY FE
APPROVED BY PSL
APPROVAL DATE YYYY-MM-DD 2022-06-03
DWG NO. 341010G
REV A
SHEET 06 OF 50
SIZE D
SCALE: NTS
1.0" ON ORIGINAL DWG

DRIVER POSITION IN RACK 1 (BANK *A)

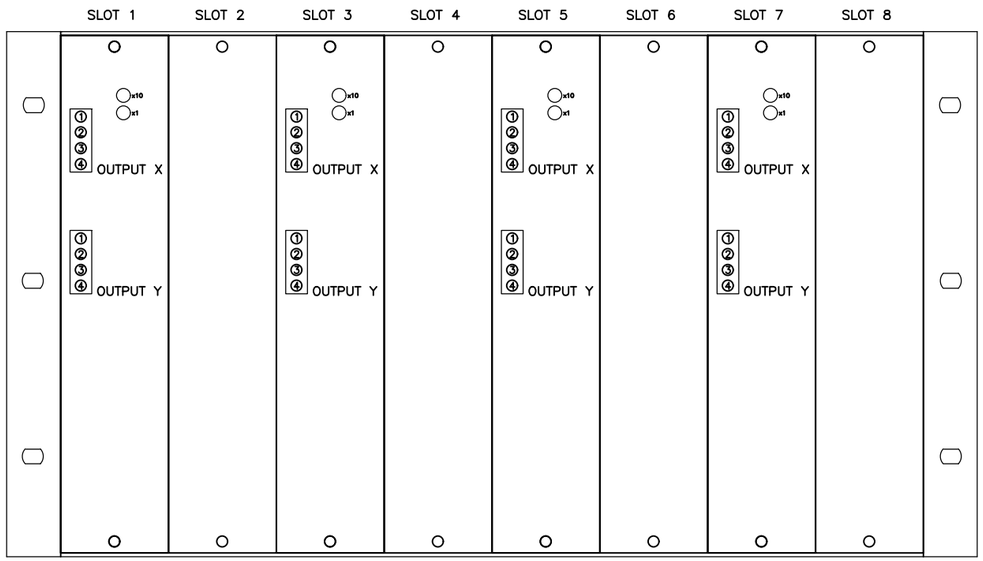

Rack 1								
Slot Number	**1**	**2**	**3**	**4**	**5**	**6**	**7**	**8**
Driver Number	Driver 1		Driver 2		Driver 3		Driver 4	
Phase	L1	L1	L3	L3	L2	L2	L2	L1
Modbus Address*	01		02		03		04	

* MODBUS ADDRESS SETTING DETAIL – TYPICAL
(ADDRESS SHOWN IS 01)

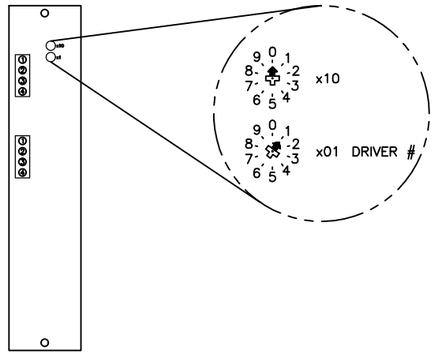

LAMP TERMINATION DETAILS
(EXAMPLE, REFER TO SHEET 11 FOR RACK 1 SPECIFICS)

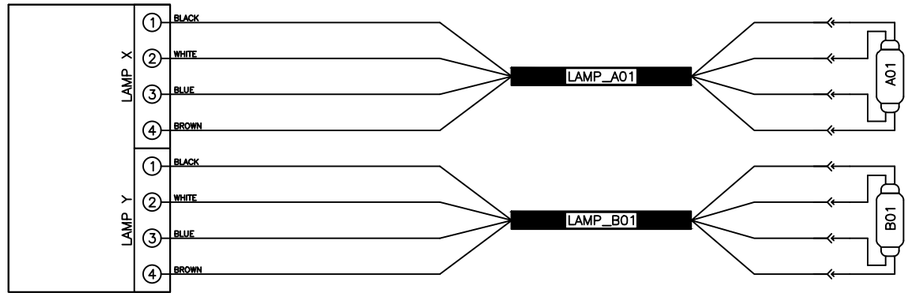

DRIVER RACK CONNECTORS
(REAR VIEW)

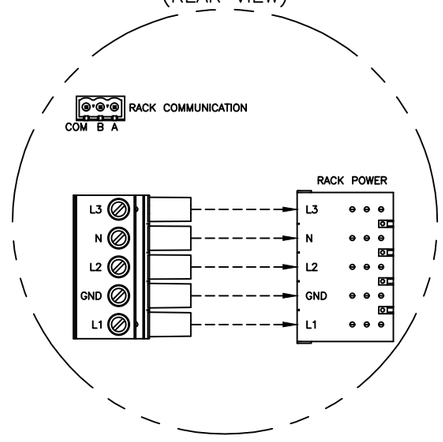

TROJAN UV
3020 GORE ROAD, LONDON, ONTARIO, CANADA, N5V 4T7
COPYRIGHT © TROJAN TECHNOLOGIES, 2022 . ALL RIGHTS RESERVED.

DESCRIPTION: PDC, UVSIGNA EL CENTRO CA
RACK 1 LAMP DRIVERS

REVISED BY	PSL
CHECKED BY	FF
APPROVED BY	PSL
APPROVAL DATE YYYY-MM-DD	2022-06-03
DWG NO.	341010G
REV	A
SCALE:	NTS
SHEET	10 OF 50
SIZE	D

1.0" ON ORIGINAL DWG (0 0.5 1.0)

RACK 1 CONNECTIONS (BANK *A)

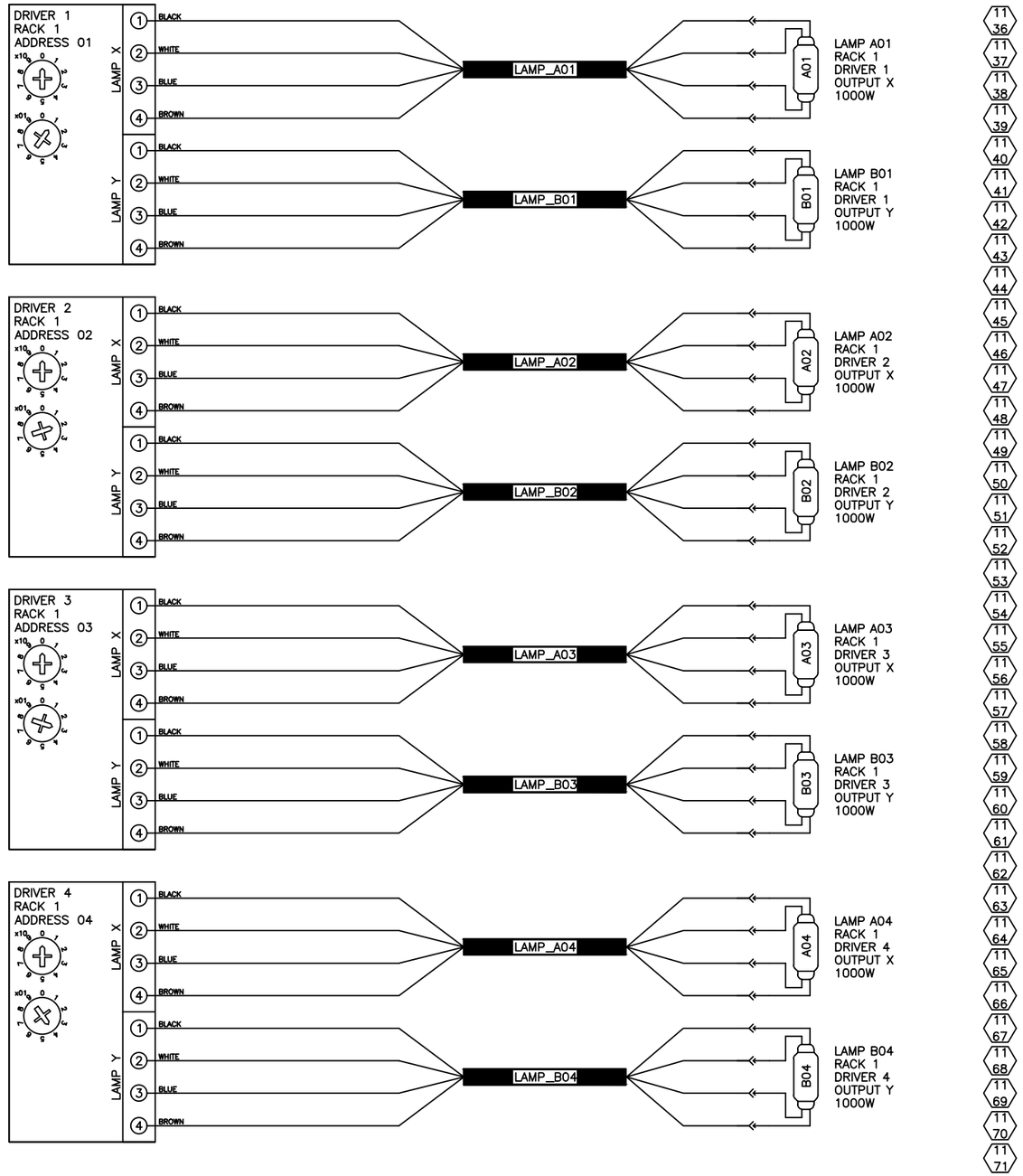

TROJAN UV

3020 GORE ROAD, LONDON, ONTARIO, CANADA, N5V 4T7

COPYRIGHT © TROJAN TECHNOLOGIES, 2022 . ALL RIGHTS RESERVED.

DESCRIPTION: PDC, UVSIGNA EL CENTRO CA
RACK 1 LAMP–DRIVER CONNECTIONS

REVISED BY	PSL	DWG NO.	REV
CHECKED BY	FE	341010G	A
APPROVED BY	PSL		
APPROVAL DATE YYYY-MM-DD	2022-06-03	SHEET 11 OF 50	SIZE D

0 0.5 1.0
1.0" ON ORIGINAL DWG
SCALE: NTS

DRIVER POSITION IN RACK 2 (BANK *B)

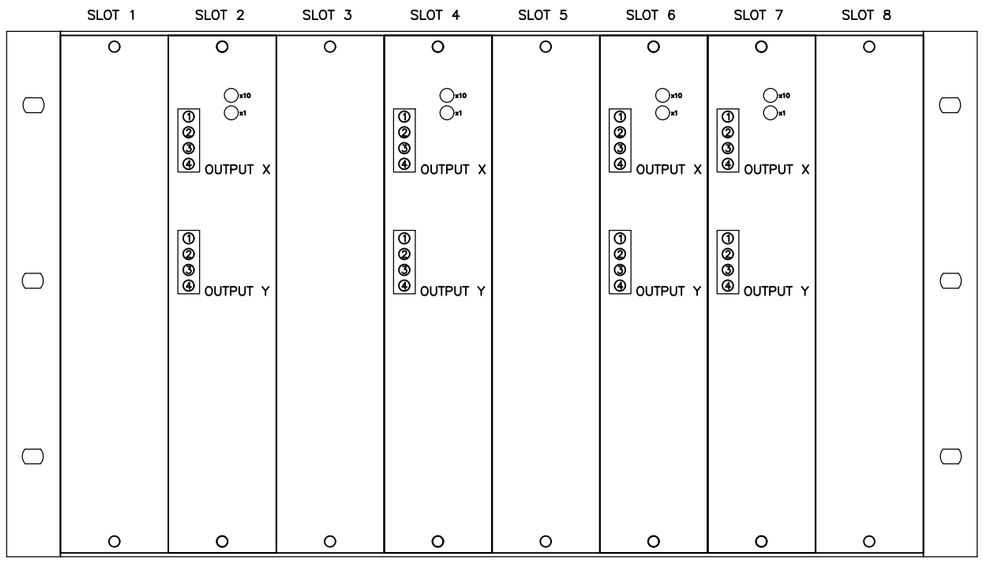

Rack 2								
Slot Number	**1**	**2**	**3**	**4**	**5**	**6**	**7**	**8**
Driver Number		Driver 1		Driver 2		Driver 3	Driver 4	
Phase	L3	L3	L2	L2	L1	L1	L1	L3
Modbus Address*		01		02		03	04	

* MODBUS ADDRESS SETTING DETAIL – TYPICAL
(ADDRESS SHOWN IS 01)

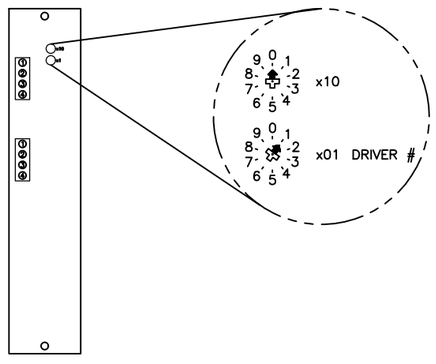

LAMP TERMINATION DETAILS
(EXAMPLE, REFER TO SHEET 13 FOR RACK 2 SPECIFICS)

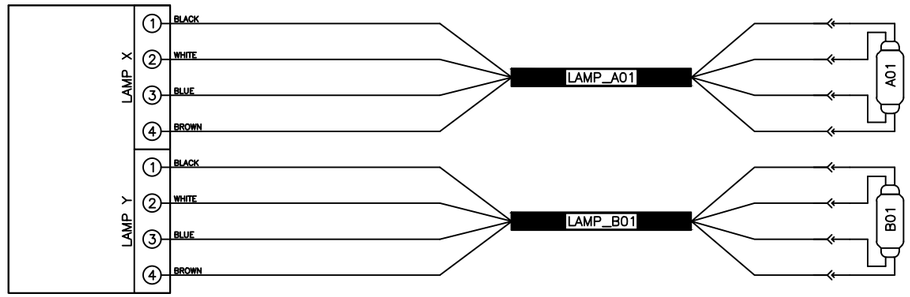

DRIVER RACK CONNECTORS
(REAR VIEW)

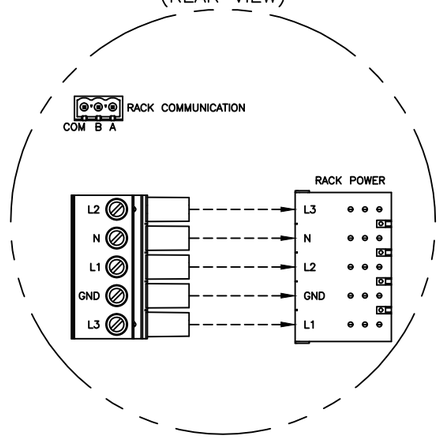

COPYRIGHT © TROJAN TECHNOLOGIES, 2022 . ALL RIGHTS RESERVED.

TROJANUV
3020 GORE ROAD, LONDON, ONTARIO, CANADA, N5V 4T7

DESCRIPTION: PDC, UVSIGNA EL CENTRO CA
RACK 2 LAMP DRIVERS

REVISED BY	PSL	DWG NO.	REV
CHECKED BY	FF	341010G	A
APPROVED BY	PSL		
APPROVAL DATE YYYY-MM-DD	2022-06-03	SHEET 12 OF 50	SIZE D

0 0.5 1.0
1.0" ON ORIGINAL DWG
SCALE: NTS

RACK 2 CONNECTIONS (BANK *B)

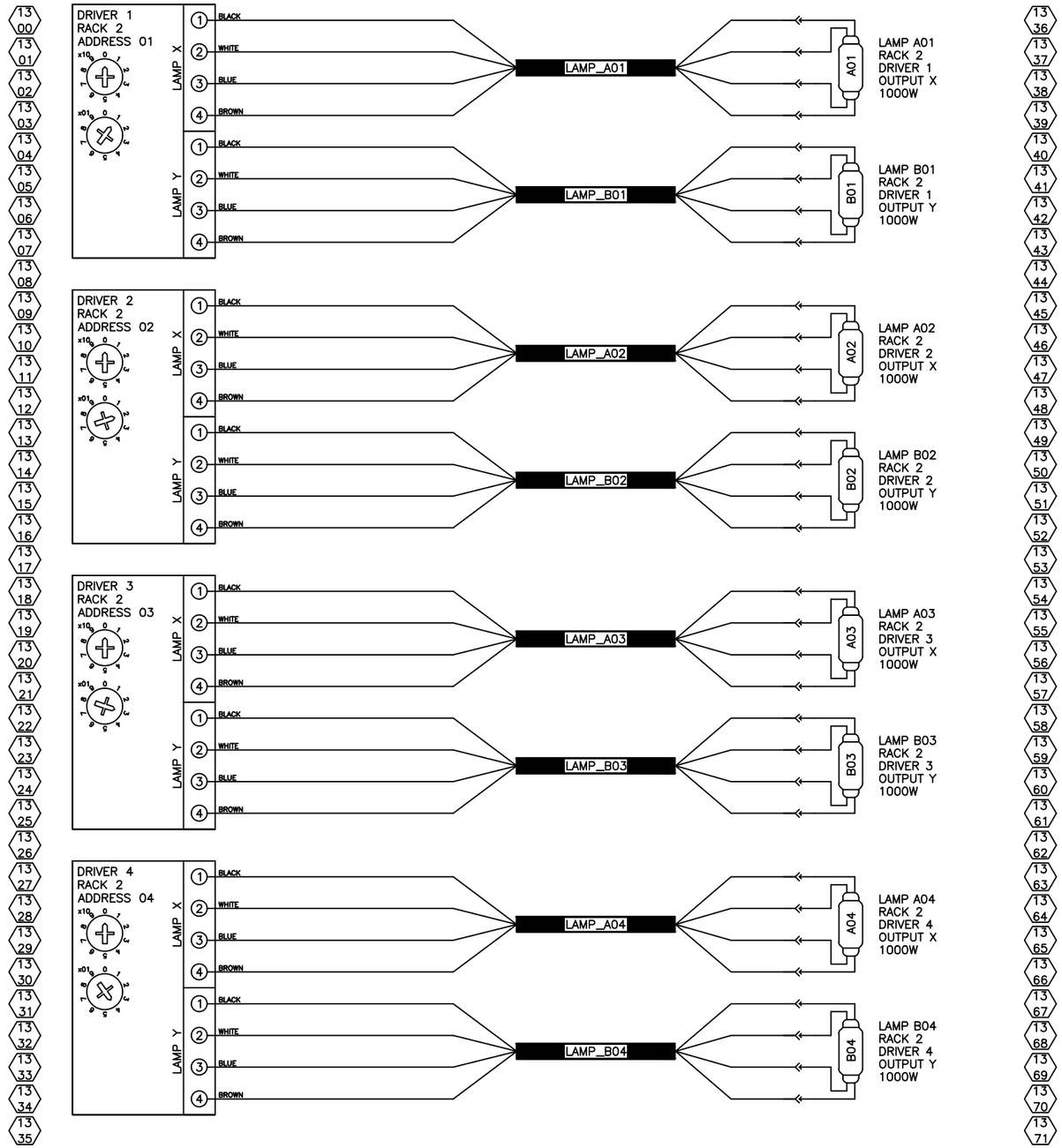

TROJAN UV

3020 GORE ROAD, LONDON, ONTARIO, CANADA, N5V 4T7

COPYRIGHT © TROJAN TECHNOLOGIES, 2022 . ALL RIGHTS RESERVED.

DESCRIPTION: PDC, UVSIGNA EL CENTRO CA
RACK 2 LAMP–DRIVER CONNECTIONS

REVISED BY	PSL	DWG NO.	REV
CHECKED BY	FE	341010G	A
APPROVED BY	PSL		
APPROVAL DATE (YYYY-MM-DD)	2022-06-03	SHEET 13 OF 50	SIZE D

0 0.5 1.0
1.0" ON ORIGINAL DWG
SCALE: NTS

DRIVER POSITION IN RACK 3 (BANK *C)

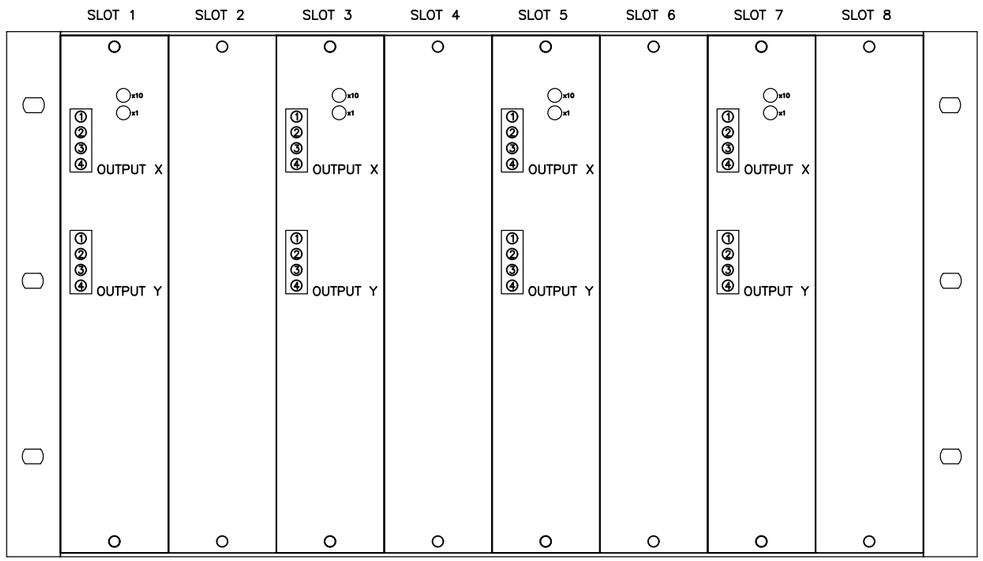

Rack 3								
Slot Number	**1**	**2**	**3**	**4**	**5**	**6**	**7**	**8**
Driver Number	Driver 1		Driver 2		Driver 3		Driver 4	
Phase	L2	L2	L1	L1	L3	L3	L3	L2
Modbus Address*	01		02		03		04	

* MODBUS ADDRESS SETTING DETAIL – TYPICAL
(ADDRESS SHOWN IS 01)

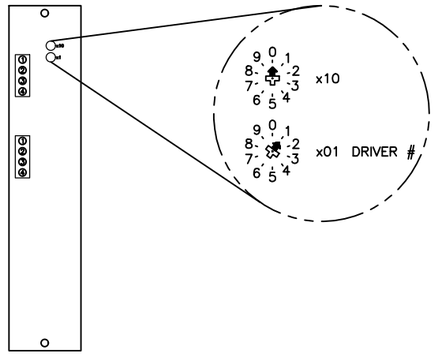

LAMP TERMINATION DETAILS
(EXAMPLE, REFER TO SHEET 15 FOR RACK 3 SPECIFICS)

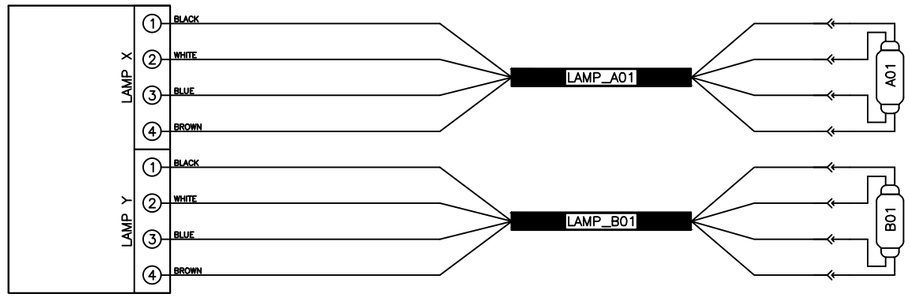

DRIVER RACK CONNECTORS
(REAR VIEW)

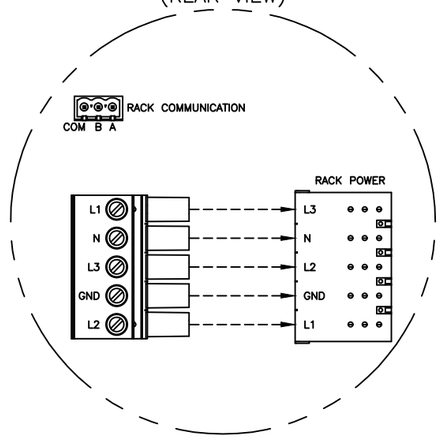

COPYRIGHT © TROJAN TECHNOLOGIES, 2022 . ALL RIGHTS RESERVED.

TROJANUV
3020 GORE ROAD, LONDON, ONTARIO, CANADA, N5V 4T7

DESCRIPTION	PDC, UVSIGNA EL CENTRO CA RACK 3 LAMP DRIVERS
REVISED BY	PSL
CHECKED BY	FF
APPROVED BY	PSL
APPROVAL DATE YYYY-MM-DD	2022-06-03
DWG NO.	341010G
REV	A
SHEET	14 OF 50
SIZE	D
SCALE:	NTS

RACK 3 CONNECTIONS (BANK *C)

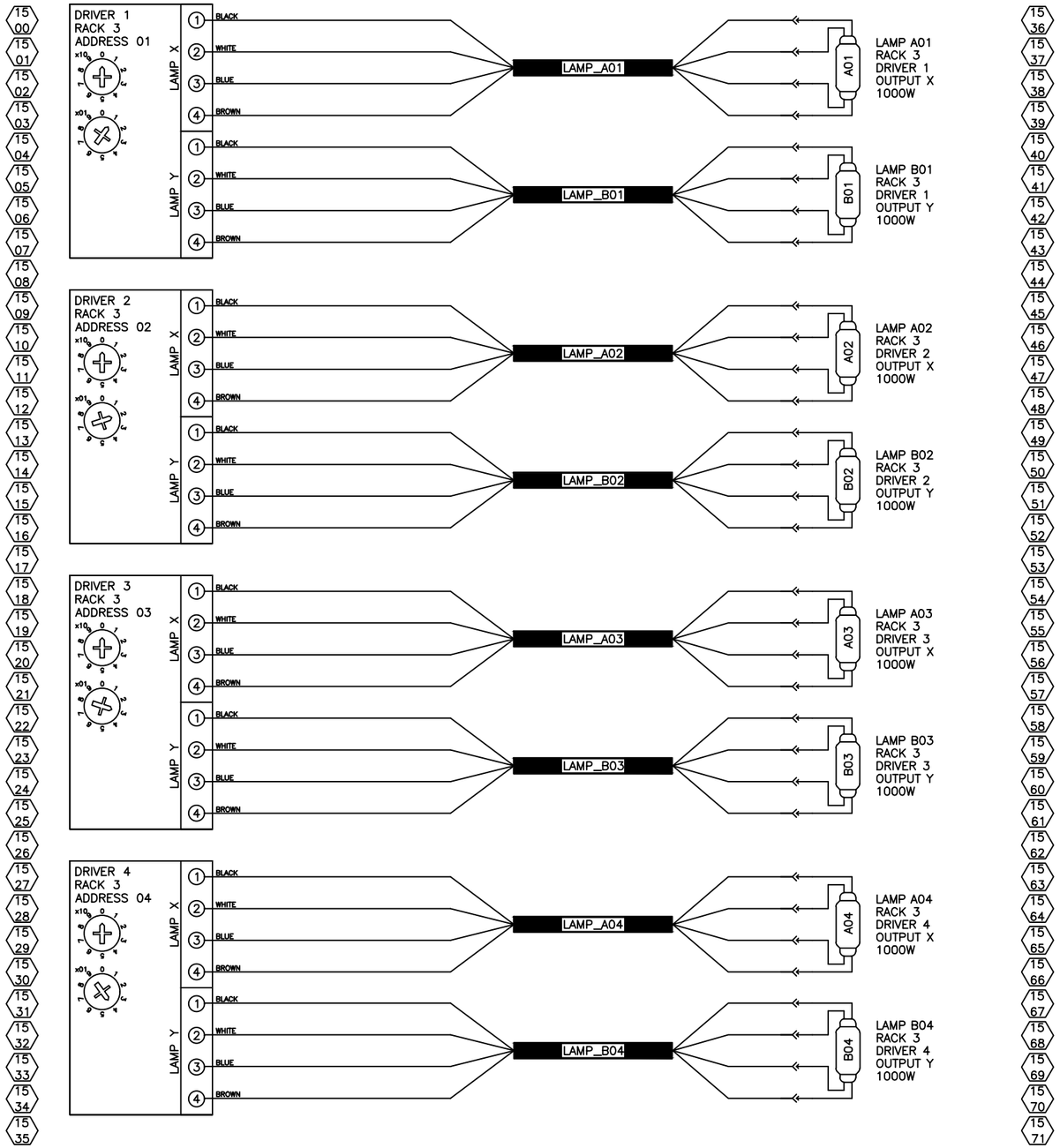

TROJAN UV

3020 GORE ROAD, LONDON, ONTARIO, CANADA, N5V 4T7

COPYRIGHT © TROJAN TECHNOLOGIES, 2022 . ALL RIGHTS RESERVED.

DESCRIPTION: PDC, UVSIGNA EL CENTRO CA
RACK 3 LAMP–DRIVER CONNECTIONS

REVISED BY	PSL	DWG NO.	REV
CHECKED BY	FE	341010G	A
APPROVED BY	PSL		
APPROVAL DATE (YYYY-MM-DD)	2022-06-03	SHEET 15 OF 50	SIZE D

0 0.5 1.0
1.0" ON ORIGINAL DWG
SCALE: NTS

MAIN GROUND LUG CONNECTION LAYOUT

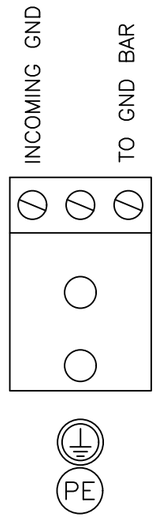

GROUND BAR CONNECTION LAYOUT

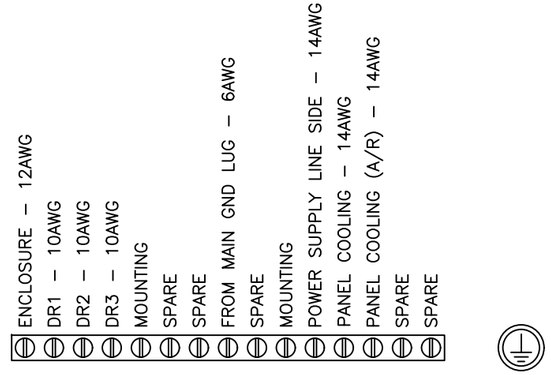

TROJAN UV

3020 GORE ROAD, LONDON, ONTARIO, CANADA, N5V 4T7

COPYRIGHT © TROJAN TECHNOLOGIES, 2022 . ALL RIGHTS RESERVED.

DESCRIPTION: PDC, UVSIGNA EL CENTRO CA
GROUNDING DETAIL

REVISED BY	PSL	DWG NO.	REV
CHECKED BY	FE	341010G	A
APPROVED BY	PSL		
APPROVAL DATE YYYY-MM-DD	2022-06-03	SHEET 23 OF 50	SIZE D

0 0.5 1.0
1.0" ON ORIGINAL DWG
SCALE: NTS

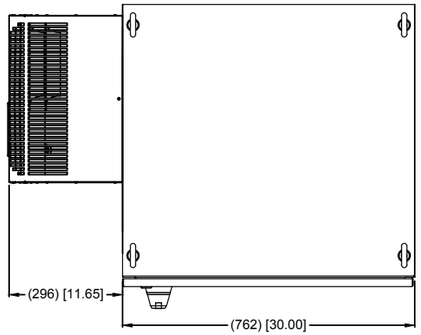

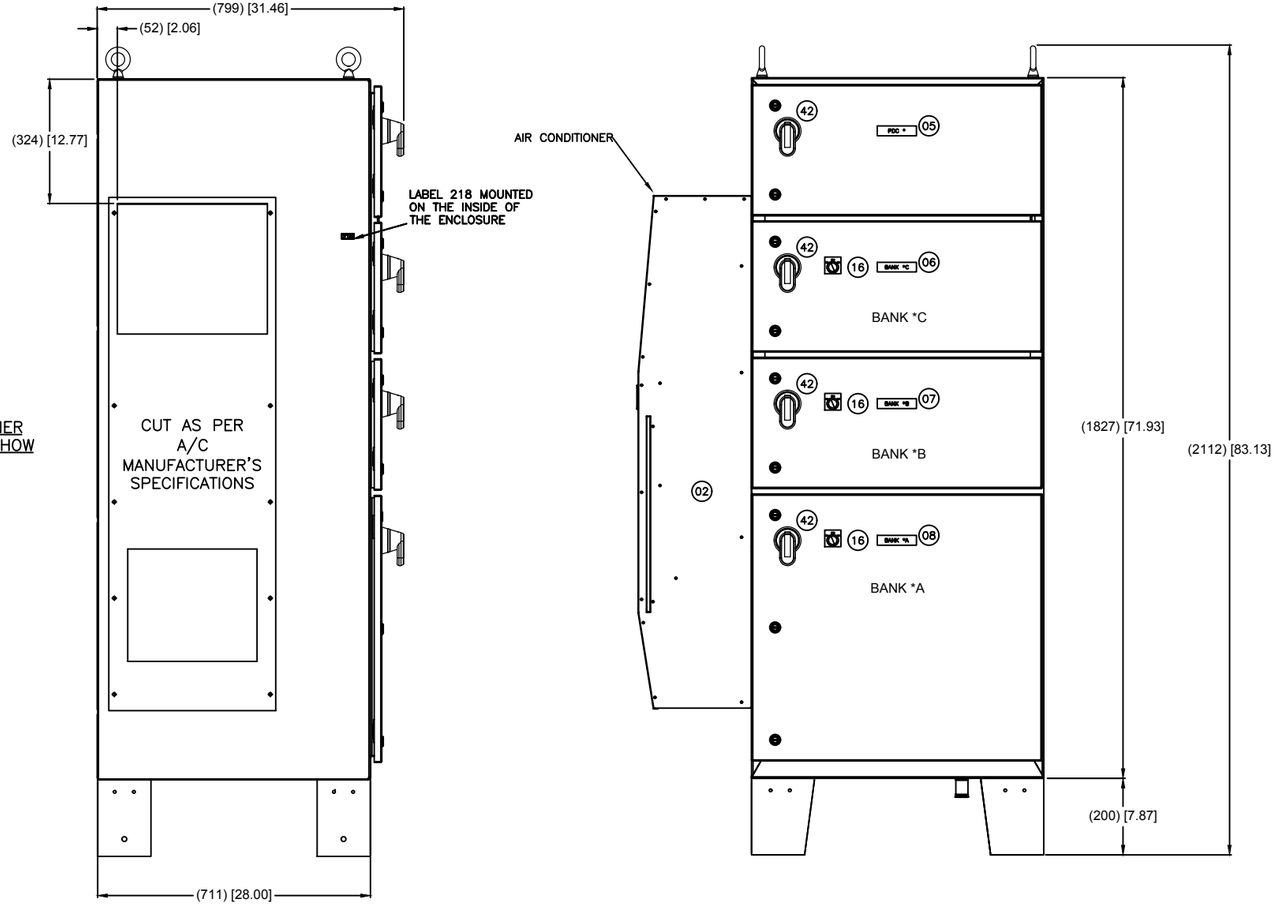

AIR CONDITIONER REMOVED TO SHOW DETAIL

NOTES:
1. UNIT: (mm) [INCH]
2. DIMENSIONS ARE REFERENCE ONLY

TROJAN UV
3020 GORE ROAD, LONDON, ONTARIO, CANADA, N5V 4T7
COPYRIGHT © TROJAN TECHNOLOGIES, 2022 . ALL RIGHTS RESERVED.

DESCRIPTION: PDC, UVSIGNA EL CENTRO CA EXTERNAL LAYOUT
REVISED BY: PSL
CHECKED BY: FE
APPROVED BY: PSL
APPROVAL DATE YYYY-MM-DD: 2022-06-03
DWG NO.: 341010G
REV: A
SCALE: NTS
SHEET 25 OF 50
SIZE D

ROOF REMOVED FOR CLARITY

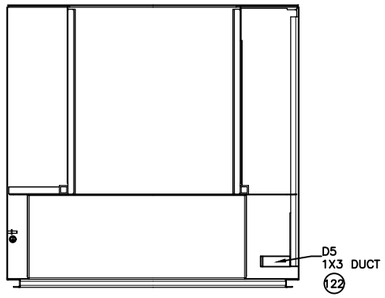

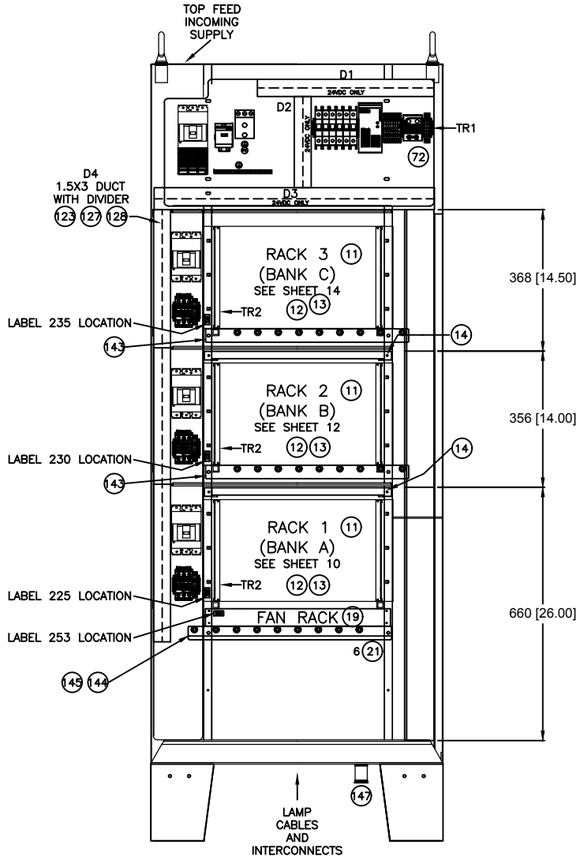

DOOR STRUCTURE REMOVED FOR CLARITY

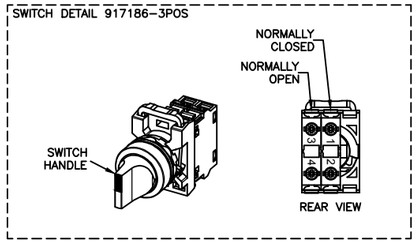

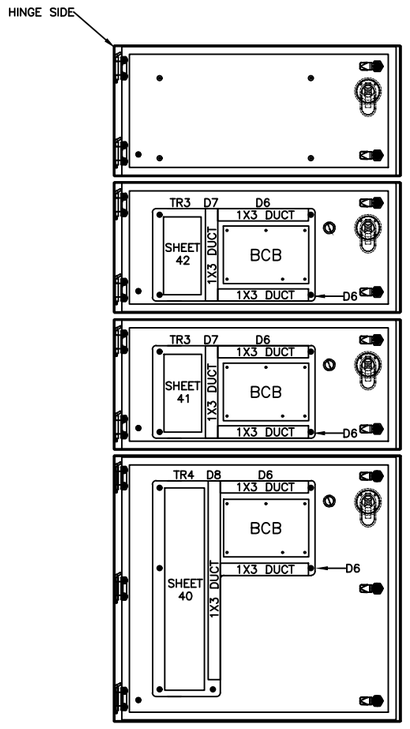

RACK 3 DOOR INSIDE LAYOUT

RACK 2 DOOR INSIDE LAYOUT

RACK 1 DOOR INSIDE LAYOUT

PANEL DOORS INSIDE LAYOUT

NOTES:
1. USE M6x1.0 TAP FOR ALL MESH DIVIDER MOUNTING HOLES (ITEM 14), SUPPORT TRAY/CABLE MOUNTING PLATE(ITEM 145, 144, 143), DRIVER RACKS (ITEM 11) AND FAN RACKS (ITEM 19), USE SST PHILLIPS HEAD SCREW AND SST LOCK WASHER.
2. BOND ENCLOSURE DOOR TO ENCLOSURE WITH 12AWG GREEN/YELLOW WIRE

TROJANUV
3020 GORE ROAD, LONDON, ONTARIO, CANADA, N5V 4T7
COPYRIGHT © TROJAN TECHNOLOGIES, 2022 . ALL RIGHTS RESERVED.

DESCRIPTION: PDC, UVSIGNA EL CENTRO CA
INTERNAL LAYOUT

REVISED BY	PSL	DWG NO.	REV
CHECKED BY	FE	341010G	A
APPROVED BY	PSL		
APPROVAL DATE (YYYY-MM-DD)	2022-06-03	SHEET 26 OF 50	SIZE D

0 0.5 1.0
1.0" ON ORIGINAL DWG
SCALE: NTS

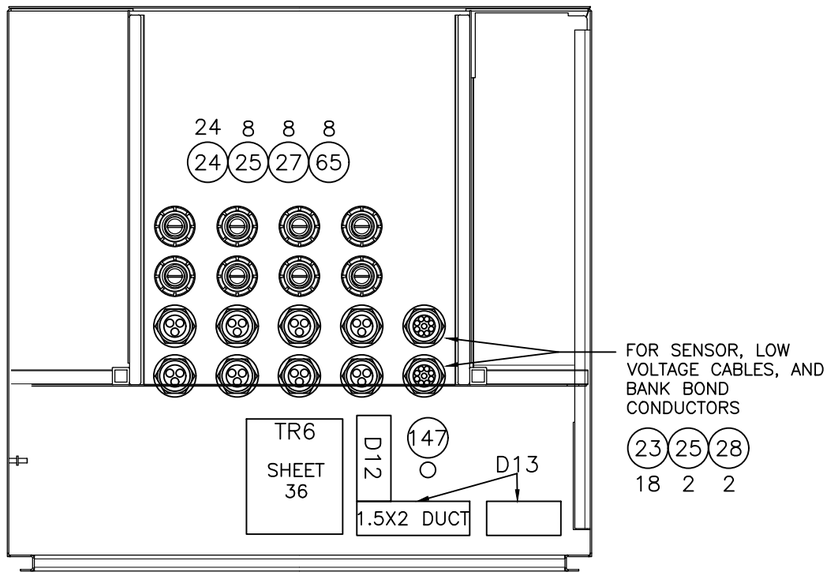

BOTTOM INSIDE VIEW
(LOOKING THROUGH THE DOOR)

COPYRIGHT © TROJAN TECHNOLOGIES, 2022 . ALL RIGHTS RESERVED.

TROJANUV
3020 GORE ROAD, LONDON, ONTARIO, CANADA, N5V 4T7

DESCRIPTION: PDC, UVSIGNA EL CENTRO CA
INTERNAL BOTTOM LAYOUT

REVISED BY	PSL	DWG NO.	REV
CHECKED BY	FE	341010G	A
APPROVED BY	PSL		
APPROVAL DATE YYYY-MM-DD	2022-06-03	SHEET 27 OF 50	SIZE D

0 0.5 1.0
1.0" ON ORIGINAL DWG
SCALE: NTS

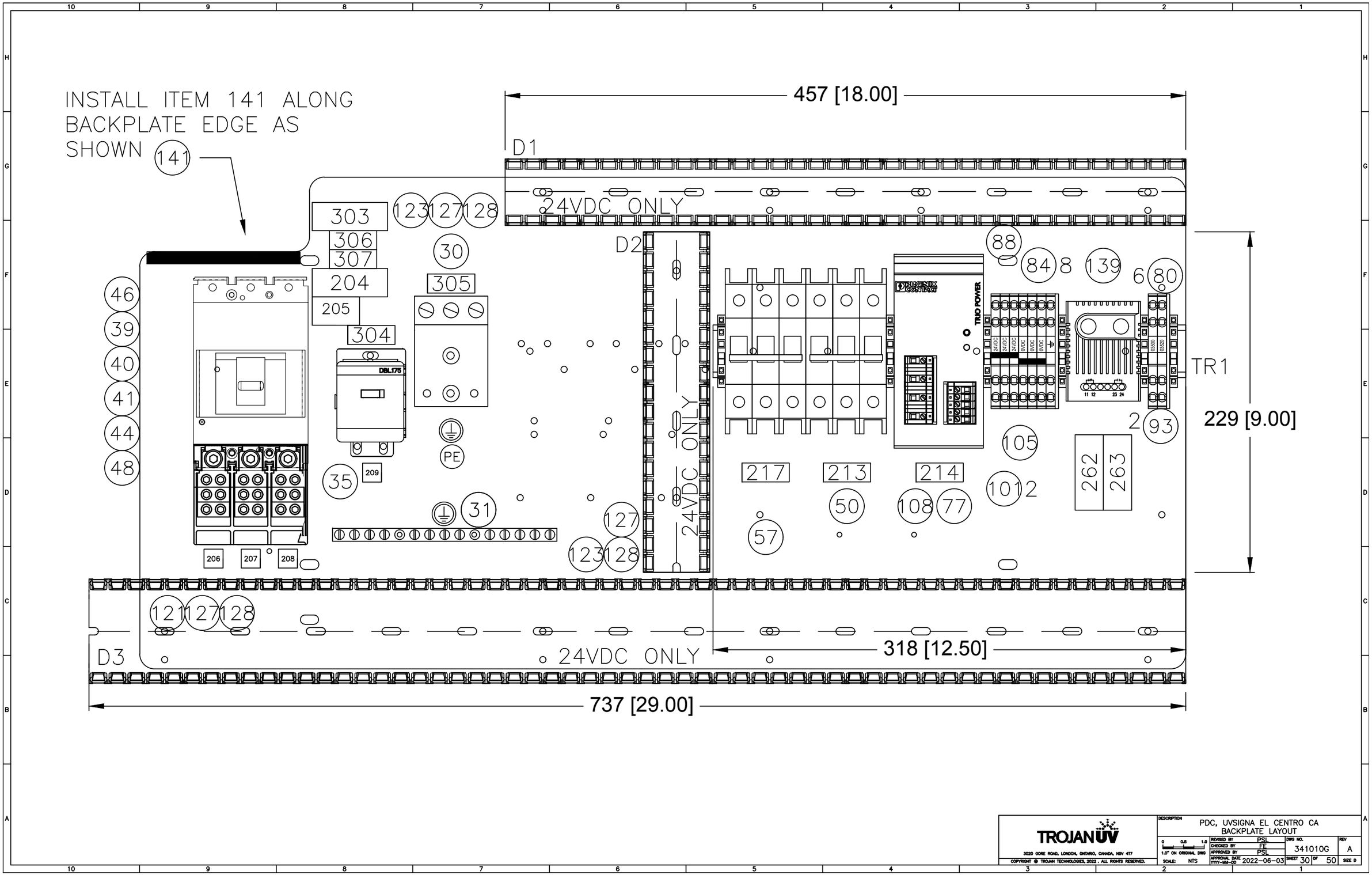
INSTALL ITEM 141 ALONG BACKPLATE EDGE AS SHOWN
141
457 [18.00]
D1
24VDC ONLY
D2
D3
24VDC ONLY
24VDC ONLY
TR1
229 [9.00]
318 [12.50]
737 [29.00]
303
306
307
204
205
304
305
DBL175
PE
209
206
207
208
123
127
128
30
31
35
46
39
40
41
44
48
88
84
8
139
6
80
2
93
105
1012
262
263
217
213
214
50
108
77
57
121
127
128
TRIO POWER
TROJAN UV
3020 GORE ROAD, LONDON, ONTARIO, CANADA, N5V 4T7
COPYRIGHT © TROJAN TECHNOLOGIES, 2022 . ALL RIGHTS RESERVED.
DESCRIPTION
PDC, UVSIGNA EL CENTRO CA
BACKPLATE LAYOUT
1.0" ON ORIGINAL DWG
SCALE: NTS
REVISED BY PSL
CHECKED BY FE
APPROVED BY PSL
APPROVAL DATE YYYY-MM-DD 2022-06-03
DWG NO. 341010G
REV A
SHEET 30 OF 50
SIZE D

SIDE PLATE VIEW 1

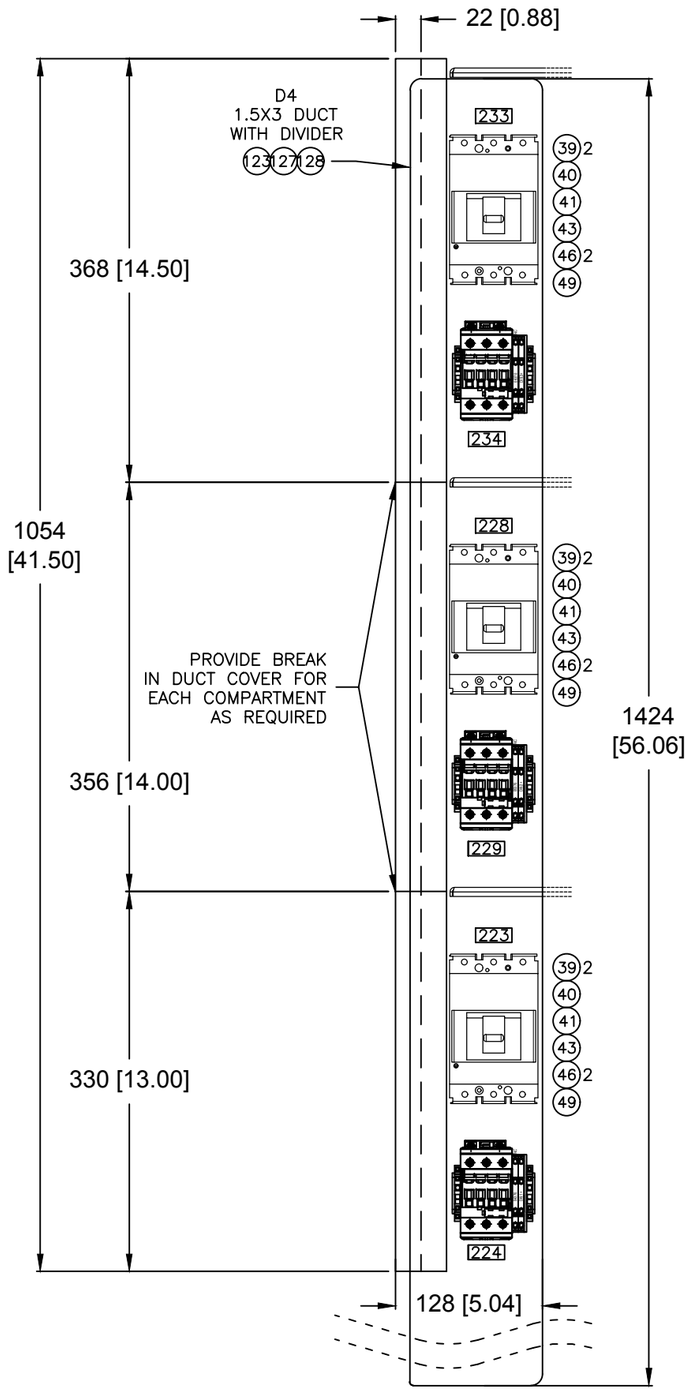

SIDE PLATE VIEW 2

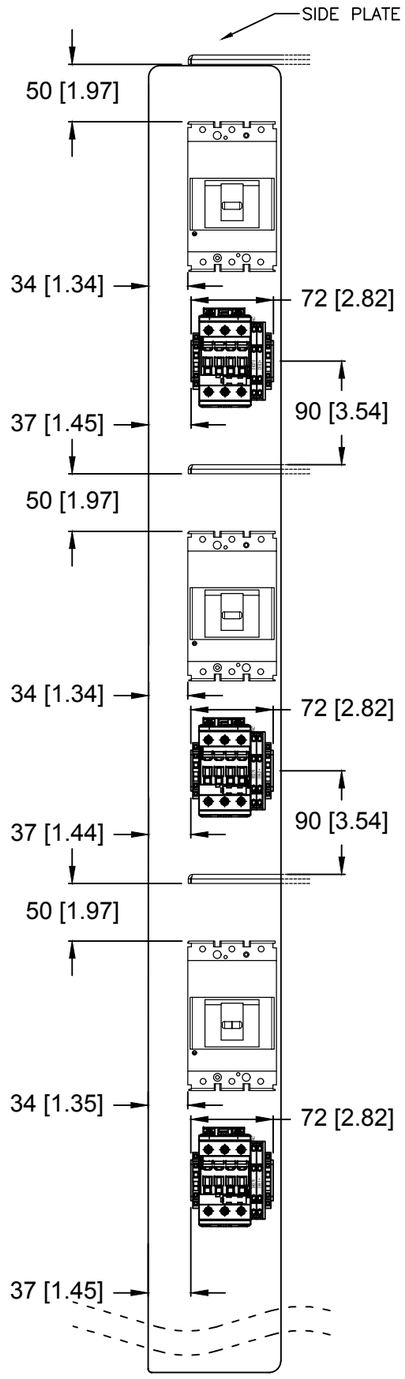

TERMINAL BLOCK DETAIL

RACK 3 CONTACTOR

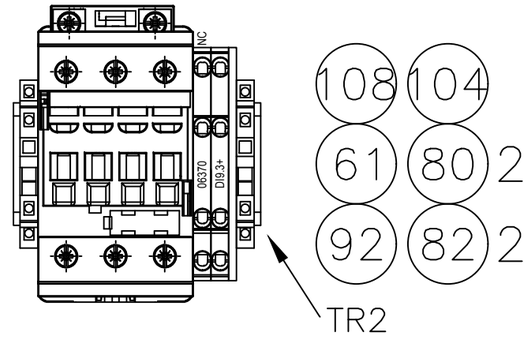

RACK 2 CONTACTOR

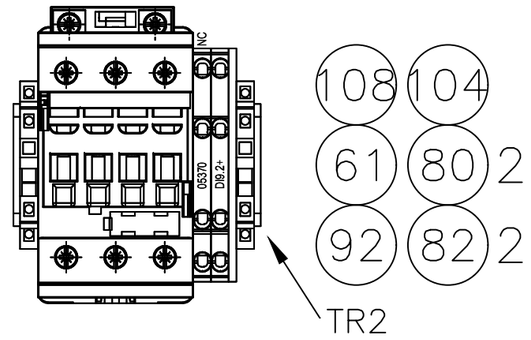

RACK 1 CONTACTOR

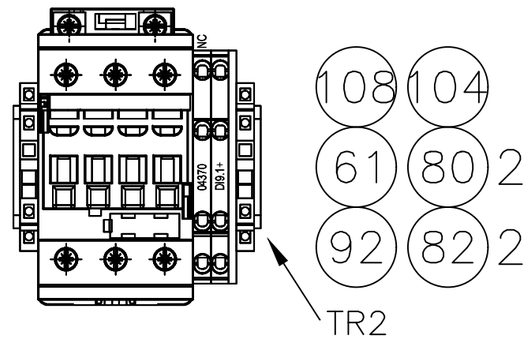

TROJAN UV
3020 GORE ROAD, LONDON, ONTARIO, CANADA, N5V 4T7
COPYRIGHT © TROJAN TECHNOLOGIES, 2022 . ALL RIGHTS RESERVED.

DESCRIPTION: PDC, UVSIGNA EL CENTRO CA
SIDE PLATE LAYOUT

REVISED BY	PSL	DWG NO.	REV
CHECKED BY	FE	341010G	A
APPROVED BY	PSL		
APPROVAL DATE (YYYY-MM-DD)	2022-06-03	SHEET 33 OF 50	SIZE D

0 0.5 1.0
1.0" ON ORIGINAL DWG
SCALE: NTS

BOTTOM TERMINAL BLOCKS

FIELD WIRING

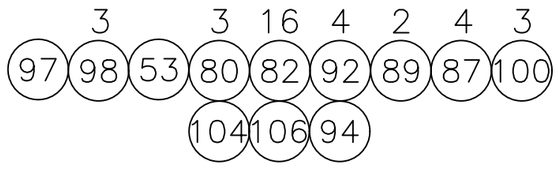

PANEL WIRING

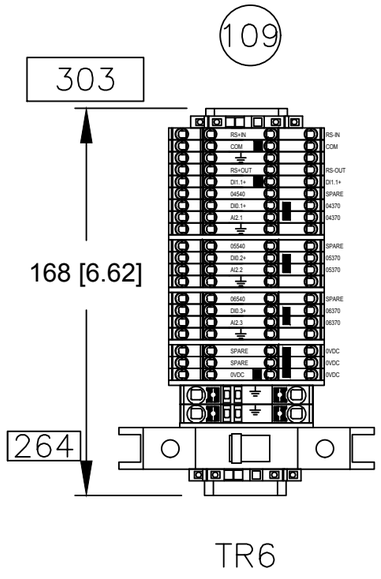

TR6

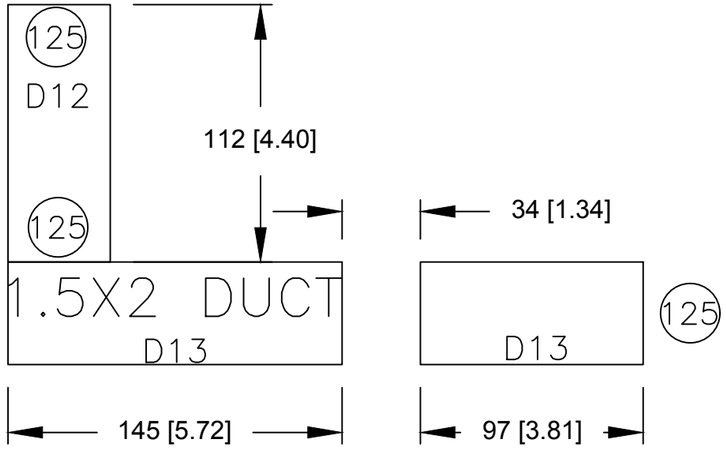

TROJANUV 3020 GORE ROAD, LONDON, ONTARIO, CANADA, N5V 4T7	DESCRIPTION: PDC, UVSIGNA EL CENTRO CA BOTTOM TERMINAL BLOCK LAYOUT		
COPYRIGHT © TROJAN TECHNOLOGIES, 2022 . ALL RIGHTS RESERVED.	0 0.5 1.0 1.0" ON ORIGINAL DWG SCALE: NTS	REVISED BY: PSL CHECKED BY: FE APPROVED BY: PSL APPROVAL DATE YYYY-MM-DD: 2022-06-03	DWG NO.: 341010G REV: A SHEET 36 OF 50 SIZE D

TERMINAL BLOCK DETAIL

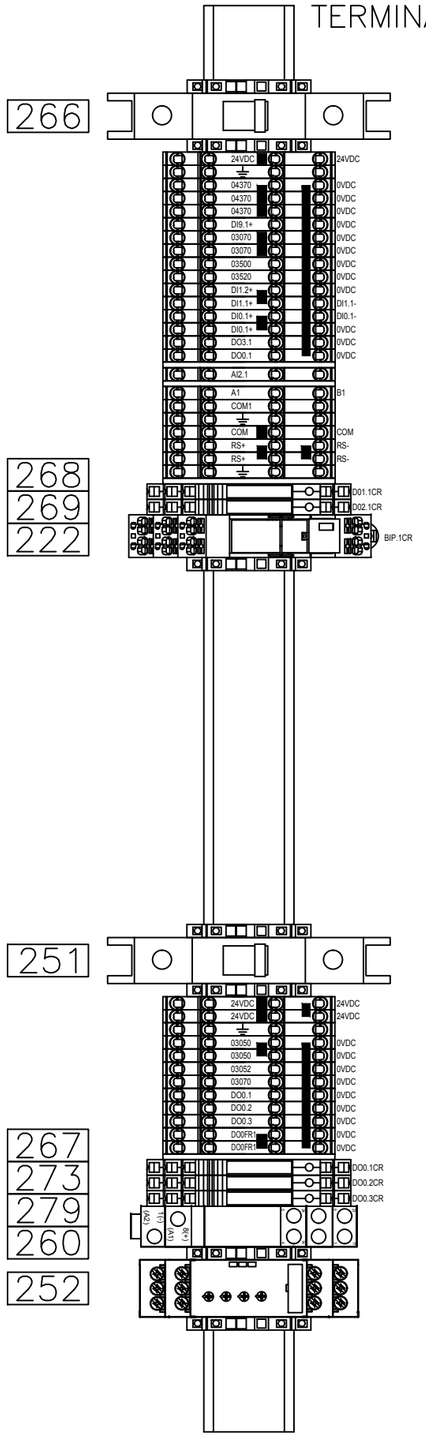

108 99
80 3 98 5
52 97
82 21
104
100 2
87 3
92 3
115 2
114

108 99
80 4 98 3
51
82 11
104
100 2
87
92
115 3
117 118 119
137

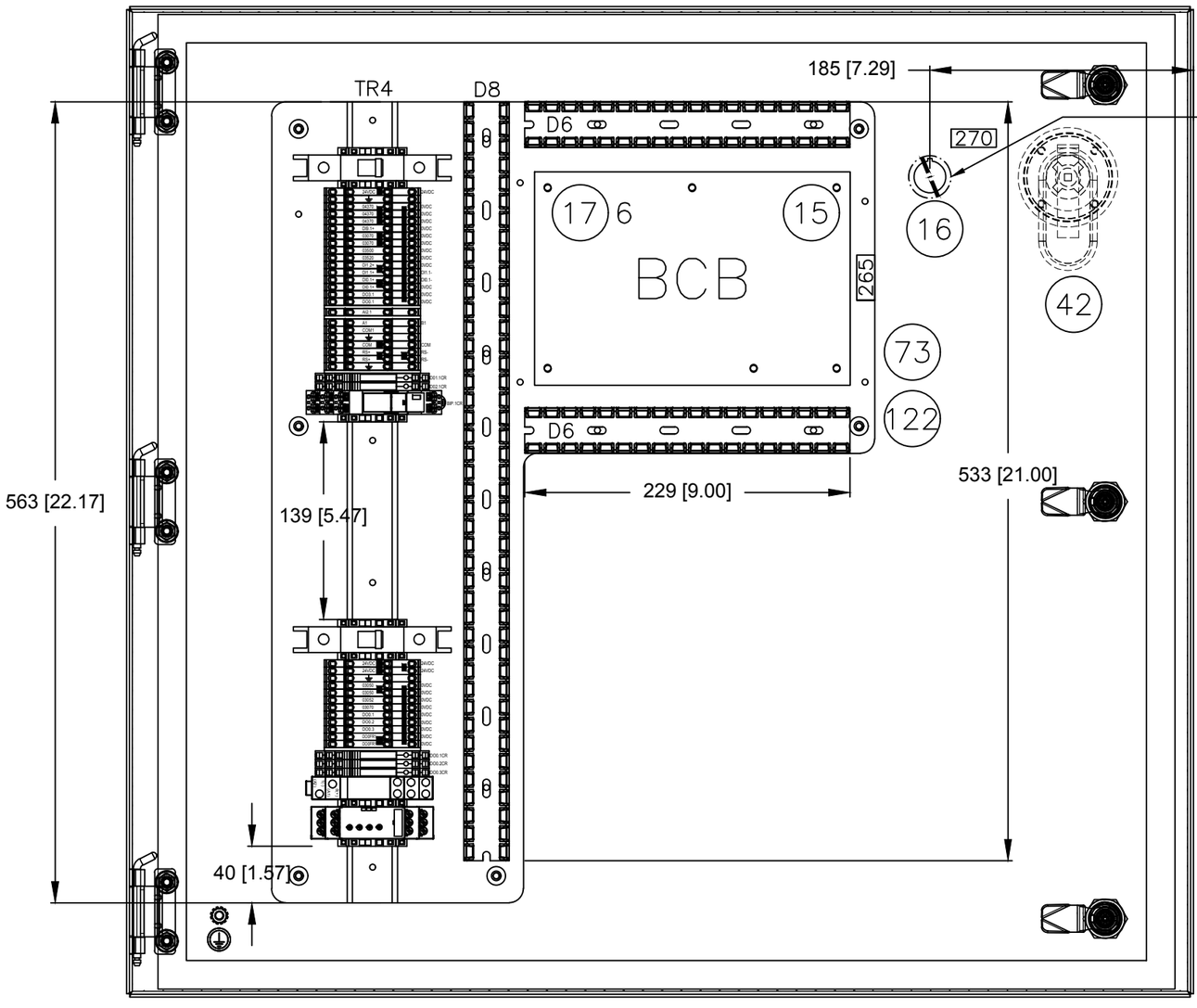

TROJAN UV
3020 GORE ROAD, LONDON, ONTARIO, CANADA, N5V 4T7
COPYRIGHT © TROJAN TECHNOLOGIES, 2022 . ALL RIGHTS RESERVED.

DESCRIPTION: PDC, UVSIGNA EL CENTRO CA
RACK 1 DOOR LAYOUT

REVISED BY	PSL
CHECKED BY	FE
APPROVED BY	PSL
APPROVAL DATE YYYY-MM-DD	2022-06-03
DWG NO.	341010G
REV	A
SHEET	40 OF 50
SIZE	D
SCALE	NTS

0 0.5 1.0
1.0" ON ORIGINAL DWG

TERMINAL BLOCK DETAIL

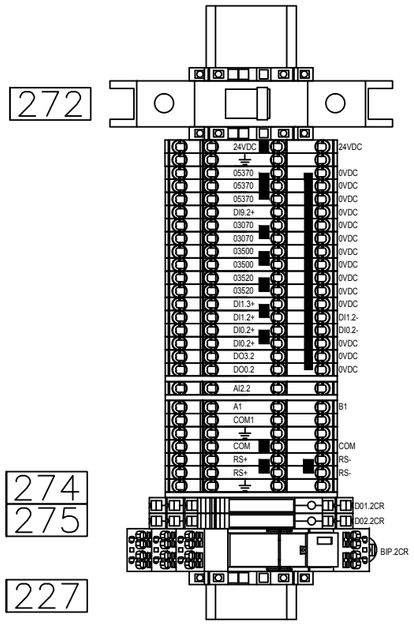

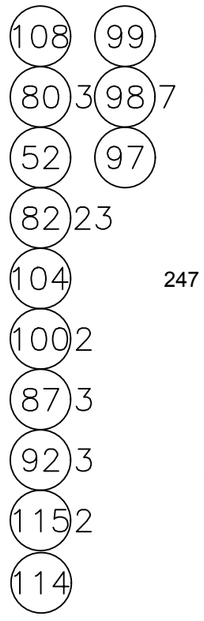

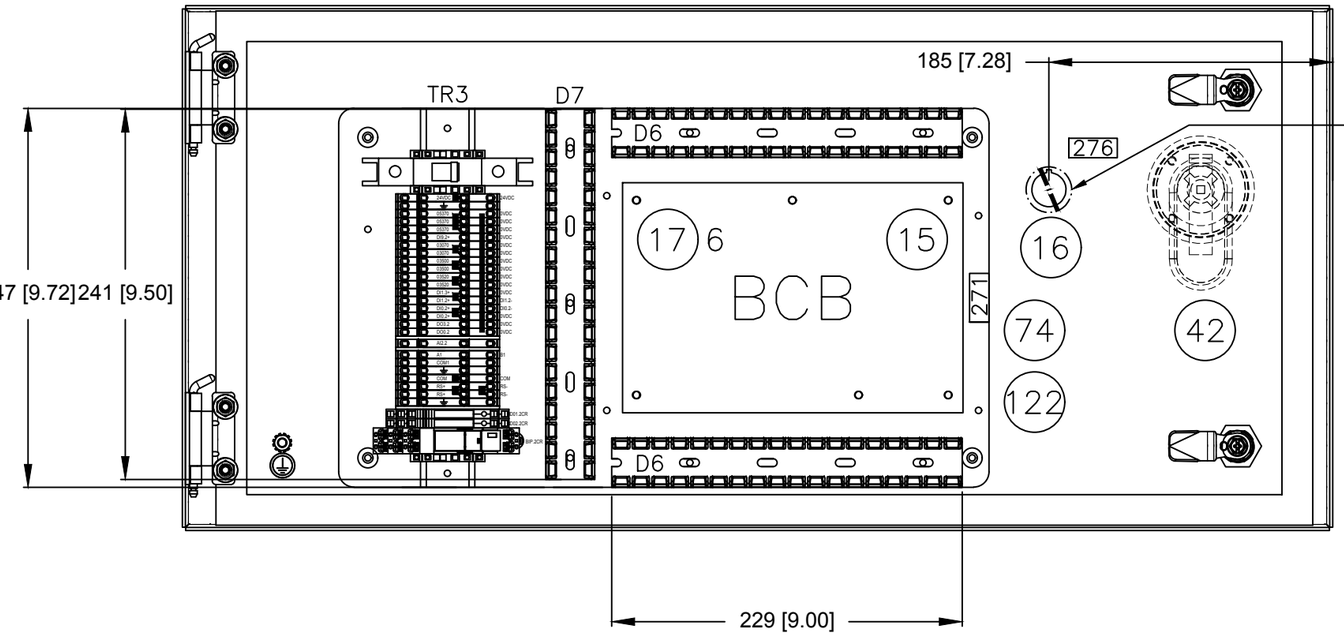

TROJAN UV
3020 GORE ROAD, LONDON, ONTARIO, CANADA, N5V 4T7
COPYRIGHT © TROJAN TECHNOLOGIES, 2022 . ALL RIGHTS RESERVED.

DESCRIPTION: PDC, UVSIGNA EL CENTRO CA
RACK 2 DOOR LAYOUT

REVISED BY	PSL	DWG NO.	REV
CHECKED BY	FE	341010G	A
APPROVED BY	PSL		
APPROVAL DATE YYYY-MM-DD	2022-06-03	SHEET 41 OF 50	SIZE D

0 0.5 1.0
1.0" ON ORIGINAL DWG
SCALE: NTS

TERMINAL BLOCK DETAIL

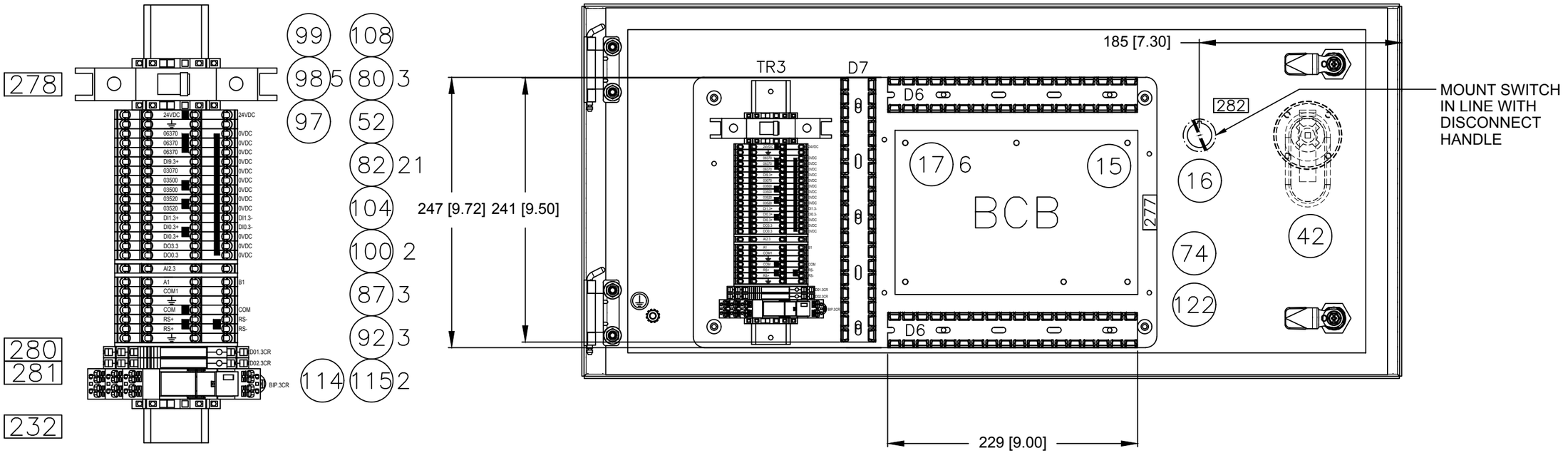

TROJAN UV

3020 GORE ROAD, LONDON, ONTARIO, CANADA, N5V 4T7

COPYRIGHT © TROJAN TECHNOLOGIES, 2022 . ALL RIGHTS RESERVED.

DESCRIPTION: PDC, UVSIGNA EL CENTRO CA
RACK 3 DOOR LAYOUT

REVISED BY	PSL	DWG NO.	REV
CHECKED BY	FE	341010G	A
APPROVED BY	PSL		
APPROVAL DATE (YYYY-MM-DD)	2022-06-03	SHEET 42 OF 50	SIZE D

0 0.5 1.0
1.0" ON ORIGINAL DWG
SCALE: NTS

CHART (THIS CHART HAS ALL PART NUMBERS USED FOR EACH PDC)

PDC DESCRIPTION	PDC NUMBER	PDC NAMEPLATE ITEM 05 P.N.	BANK 1 NAMEPLATE ITEM 06 P.N.	BANK 2 NAMEPLATE ITEM 07 P.N.	BANK 3 NAMEPLATE ITEM 08 P.N.
PDC 1A-1C, UV SIGNA EL CENTRO	341010-001	917924-1A1C	917856-B1A	917856-B1B	917856-B1C
PDC 2A-2C, UV SIGNA EL CENTRO	341010-002	917924-2A2C	917856-B2A	917856-B2B	917856-B2C

ITEM	QTY	DESCRIPTION	MANUFACTURER	PART NUMBER	TROJAN NUMBER
147	1	VENT, DRAIN	HOFFMAN	AVDR4NM	901841
146					
145	1	PLATE WLDT, PDC CABLE MTG LWR	TROJAN	337993-002	337993-002
144	1	SUPPORT TRAY, DRIVER CABLE	TROJAN	337948	337948
143	2	PLATE WLDT, PDC CABLE MTG UPR	TROJAN	337993-001	337993-001
142	A/R	TAPE, ACRYLIC FOAM DBL SIDED	3M	VHB4930	005003
141	A/R	WEATHERSTRIPPING, RW108	TRIM-LOCK	750-B-2-1/16	120005
140					
139	1	THERMOSTAT, DUAL NC/NO DIN	STEGO	01172.0-00	916266
138					
137	1	RELAY, 0.3A-15A 24-240VDC/AC	ABB	CM-SRS.M2S	917509-SRSM2S
136					
135					
134					
133	A/R	CABLE, 22AWG 1PAIR 300V RS485	BELDEN	3106A	917515
132					
131					
130	A/R	SPIRAL WRAP, PE 0.5" NA	HELLERMANNTYTON	3NFP9C	917528-001
129					
128	A/R	WIRE DUCT, SLOTTED DIVIDER 3X6	PANDUIT	SD3H6	913437-SD3H6
127	A/R	WIRE DUCT, DIVIDER MTG BASE	PANDUIT	DB-C	917138-0DBC
126					
125	A/R	WIRE DUCT, TYPE F LT GRY1.5x2	PANDUIT	F1.5X2LG6 / C1.5LG6	913437-005
124					
123	A/R	WIRE DUCT, TYPE F LT GRY 1.5x3	PANDUIT	F1.5X3LG6 / C1.5LG6	913437-006
122	A/R	WIRE DUCT, TYPE F LT GRY 1x3	PANDUIT	F1X3LG6 / C1LG6	913437-004
121	A/R	WIRE DUCT, TYPE F LT GRY 2.5x3	PANDUIT	F2.5X3LG6 / C2.5LG6	913437-033
120					
119	1	RELAY, SUPPRESSION DIODE + LED	FINDER	99.02.9.024.99	917559-2001
118	1	RELAY, BASE BLU SCR TERM SPDT	FINDER	97.01SPA	917559-1001
117	1	RELAY, 16A SPDT 24VDC	FINDER	46.61.9.024.0074	917559-0001
116					
115	9	RELAY, 6A 24VDC SPDT PIT PC	PHOENIX CONTACT	2900299	915403-112
114	3	RELAY, 6A DPDT 24VDC SAF RIF	PHOENIX CONTACT	2908215	917175-3006BS
113					
112					
111					
110					
109	A/R	DIN RAIL, PERF 35x15 PHOENIX	PHOENIX CONTACT	1201730	913221
108	A/R	DIN RAIL PERF 35X7.5 PHOENIX	PHOENIX CONTACT	0801733	914147
107					
106	A/R	TERM BLK, MARKER SHEET ZB8	PHOENIX CONTACT	1052002 OR EQUIVALENT	916050-1052002
105	A/R	TERM BLK, MARKER SHEET ZB6	PHOENIX CONTACT	1051003 OR EQUIVALENT	916050-1051003
104	A/R	TERM BLK, MARKER SHEET ZBF5	PHOENIX CONTACT	0808642 OR EQUIVALENT	916050-0808642
103					
102					
101	2	TERM BLK, JUMPER 3P FBS 3 6	PHOENIX CONTACT	3030242	916050-3030242
100	A/R	TERM BLK, JUMPER 2P FBS PV	PHOENIX CONTACT	3032185	916050-3032185
99	A/R	TERM BLK, JUMPER 50P FBS 50 5	PHOENIX CONTACT	3038930	916050-3038930
98	A/R	TERM BLK, JUMPER 2P FBS 2 5	PHOENIX CONTACT	3030161	916050-3030161
97	A/R	TERM BLK, JUMPER 3P FBS 3 5	PHOENIX CONTACT	3030174	916050-3030174
96					
95					
94	1	TERM BLK, END PLT D PIT 6	PHOENIX CONTACT	3212044	916050-3212044
93	2	TERM BLK, END PLT D PIT 4 QU	PHOENIX CONTACT	3208979	916050-3208979
92	17	TERM BLK, END PLT D PITTB 2.5	PHOENIX CONTACT	3211634	916050-3211634
91					
90					
89	2	TERM BLK, PIT 6 PE GND	PHOENIX CONTACT	3211822	916078-3211822
88	1	TERM BLK, PIT 4 PE QUAT GND	PHOENIX CONTACT	3211809	916077-3211809
87	14	TERM BLK, PITTB 2.5 PE GND	PHOENIX CONTACT	3210596	916049-3210596
86					
85					
84	8	TERM BLK, PIT 4 QUATTRO GRY	PHOENIX CONTACT	3211797	916077-3211797
83					
82	98	TERM BLK, PITTB 2.5 GRY	PHOENIX CONTACT	3210567	916049-3210567
81					
80	A/R	TERM BLK, END STOP CLIPFIX 355	PHOENIX CONTACT	3022276	916050-3022276
79					
78					
77	1	PS, 24VDC 3P TRIO 10A	PHOENIX CONTACT	2866459	916051-459
76					

	ITEM	QTY	DESCRIPTION	MANUFACTURER	PART NUMBER	TROJAN NUMBER
	75					
	74	2	BACKPLATE, DOOR UPPER PDC	TROJAN	338039-003	338039-003
	73	1	BACKPLATE, DOOR LOWER PDC	TROJAN	338039-004	338039-004
	72	1	BACKPLATE, TOP LS DRILLED PDC	TROJAN	338039-006	338039-006
	71					
	70					
	69					
	68					
	67					
	66					
	65	8	PLUG, HOLE SEAL 4X POLY 1.25 INCH	HOFFMAN	ASPB100125NM	913058-125P
	64					
	63					
	62					
	61	3	CONTACTOR, AF26 45A NA 24V	ABB	AF26-30-00-11	917180-26C024
	60					
	59					
	58					
	57	1	BREAKER, 5A 3P AC/DC C ABB	ABB	SU203M-C5	917139-MC3050
	56					
	55					
	54					
	53	1	BREAKER, 1A 1P AC/DC C ABB	ABB	SU201M-C1	917139-MC1010
	52	3	BREAKER, 2A 1P AC/DC C ABB	ABB	SU201M-C2	917139-MC1020
	51	1	BREAKER, 10A 1P AC/DC C ABB	ABB	SU201M-C10	917139-MC1100
	50	1	BREAKER, 10A 3P AC/DC C ABB	ABB	SU203M-C10	917139-MC3100
	49	3	BREAKER, 25A 3P 600VAC 25KA ABB	ABB	XT1NU3025AFF000XXX	917143-N3025
	48	1	BREAKER, 45A 3P 600VAC 25KA ABB	ABB	XT1NU3045AFF000XXX	917143-N3045
	47					
	46	7	BREAKER, LUG CPRSN 3PC ABB	ABB	KXT1CU-3PC	917143-LUG3
	45					
	44	1	BREAKER, LUG MULTI 3PC XT1 ABB	ABB	KXT1MC-3PC	917143-LUG3MC
	43	3	BREAKER, AUX 24VDC 1Q/1SY	ABB	KXTAAXCDQSYFP	917143-AUX11024
	42	4	DISC, HANDLE ON/OFF 10mm4X ABB	ABB	OHB65L10B	912787-410
	41	4	500mm PISTOL HANDLE SHAFT	ABB	OXP10X500	912786-10X500
	40	4	RHE_B BASE FOR EXTENDED HANDLE	ABB	KXTBRHEBFP	916814-KXTBRHE
	39	7	BREAKER, COVER LOW 3P XT1	ABB	KXT1LTC-3	917143-LTC3
	38					
	37					
	36					
	35	1	DIST BLOCK, 175A TE	TE CONNECTIVITY	DBL175	917305-175
	34					
	33					
	32					
	31	1	**GROUND BAR, 12TAP 6-14AWG**	**ILSCO**	**D167-12**	**916079-012**
	30					
	29					
	28	2	STRAIN RELIEF, M-40 9-0.272	LAPP GROUP	53340969	915889-53340969
	27	8	STRAIN RELIEF, M-40 3-0.542	LAPP GROUP	53340310	915889-53340310
	26					
	25	10	STRAIN RELIEF, M-40 1.102 B	LAPP GROUP	S2529	915889-S2529
SEE NOTE 1	24	24	STRAIN RELIEF, INSERT 9mm	LAPP GROUP	53100009	915889-53100009
SEE NOTE 2	23	18	STRAIN RELIEF, INSERT 7mm	LAPP GROUP	53100007	915889-53100007
	22					
	21	6	FAN, METAL GUARD ORION	ORION	G109-15A	917530
	20					
	19	1	FAN ASSY, UVSIGNA6X150CFM 24VDC	ORION	OD600-24LBXC	916840
	18					
	17	18	STANDOFF, PCB 1/2" NYLON	RICHCO	LCBS-8-01	013237
	16	3	SWITCH ASSY, SEL 22mm 3POS KIT	ABB	917186-3POS	917186-3POS
	15	3	BOARD, BCB	TROJAN	931120	931120
	14	2	MESH, SOLO PDC	CUSTOM	337766	337766
	13	12	PLATE, SOLO RACK 1 SLOT	TROJAN	490297	490297
	12	12	LAMP DRIVER, SOLO 2x1kW	TROJAN	915306	915306
	11	3	RACK, SOLO DRIVER 8 SLOT	TROJAN	915307-001	915307-001
	10					
	09					
	08	2	BANK3 NAMEPLATE	TROJAN	SEE CHART	SEE CHART
	07	2	BANK2 NAMEPLATE	TROJAN	SEE CHART	SEE CHART
	06	2	BANK1 NAMEPLATE	TROJAN	SEE CHART	SEE CHART
	05	1	PDC NAMEPLATE	TROJAN	SEE CHART	SEE CHART
	04					
	03					
	02	1	AC, 8000 400/460V 304SS 4X H	PENTAIR	G520846G151	917489-08144XH
	01	1	ENCL WLDT, SOLO PDCSW 4D 304	TROJAN	338040-1404	338040-1404

NOTES:

1. ITEM 24 SEAL INSERT TO BE INSTALLED IN ITEM 27 STRAIN RELIEF BY PANEL BUILDER
2. ITEM 23 SEAL INSERT TO BE INSTALLED IN ITEM 28 STRAIN RELIEF BY PANEL BUILDER

TROJANUV

3020 GORE ROAD, LONDON, ONTARIO, CANADA, N5V 4T7

COPYRIGHT © TROJAN TECHNOLOGIES, 2022 . ALL RIGHTS RESERVED.

DESCRIPTION: PDC, UVSIGNA EL CENTRO CA
BILL OF MATERIALS

REVISED BY	PSL
CHECKED BY	FF
APPROVED BY	PSL
APPROVAL DATE YYYY-MM-DD	2022-06-03
DWG NO.	341010G
REV	A
SCALE:	NTS
SHEET	49 OF 50
SIZE	D

0 0.5 1.0
1.0" ON ORIGINAL DWG

ITEM	QTY	NAMEPLATE NUMBER	DESCRIPTION 1	DESCRIPTION 2	DESCRIPTION 3
310					
309					
308					
307	1	EMLP(27x12.5)R	TORQUE	62 lb.in	
306	1	EMLP(27x12.5)R	MAIN FEED	75C WIRE	
305	1	EMLP(27x12.5)R	TORQUE	50 lb.in	
304	1	EMLP(27x12.5)R	TORQUE	53-88 lb.in	
303	2	EMLP(45x25)R	ALL FIELD WIRING	USE COPPER	CONDUCTORS ONLY
302					
301					
300					
299					
298					
297					
296					
295					
294					
293					
292					
291					
290					
289					
288					
287					
286					
285					
284					
283					
282	1	EMLP (27x12.5) R	0671SS		
281	1	EMLP (27x12.5) R	DO2.3CR		
280	1	EMLP (27x12.5) R	DO1.3CR		
279	1	EMLP (27x12.5) R	DO0.3CR		
278	1	EMLP (27x12.5) R	0636CB	2A	
277	1	EMLP (27x12.5) R	0600BCB		
276	1	EMLP (27x12.5) R	0571SS		
275	1	EMLP (27x12.5) R	DO2.2CR		
274	1	EMLP (27x12.5) R	DO1.2CR		
273	1	EMLP (27x12.5) R	DO0.2CR		
272	1	EMLP (27x12.5) R	0536CB	2A	
271	1	EMLP (27x12.5) R	0500BCB		
270	1	EMLP (27x12.5) R	0471SS		
269	1	EMLP (27x12.5) R	DO2.1CR		
268	1	EMLP (27x12.5) R	DO1.1CR		
267	1	EMLP (27x12.5) R	DO0.1CR		
266	1	EMLP (27x12.5) R	0436CB	2A	
265	1	EMLP (27x12.5) R	0400BCB		
264	1	EMLP (27x12.5) R	0450CB	1A	
263	1	EMLP (45x25) R	0350TMP	ALERT	SET 50°C/122°F
262	1	EMLP (45x25) R	0350TMP	SHUTDOWN	SET 55°C/131°F
261					
260	1	EMLP (27x12.5) R	FR1CR		
259					
258					
257					
256					

ITEM	QTY	NAMEPLATE NUMBER	DESCRIPTION 1	DESCRIPTION 2	DESCRIPTION 3
255					
254					
253	1	EMLP (27x12.5) R	0305FR		
252	1	EMLP (27x12.5) R	0305CT		
251	1	EMLP (27x12.5) R	0305CB	10A	
250					
249					
248					
247					
246					
245					
244					
243					
242					
241					
240					
239					
238					
237					
236					
235	1	EMLP (27x12.5) R	DR3		
234	1	EMLP (27x12.5) R	DR3CON		
233	1	EMLP (27x12.5) R	0227CB	25A	
232	1	EMLP (27x12.5) R	BIP.3CR		
231					
230	1	EMLP (27x12.5) R	DR2		
229	1	EMLP (27x12.5) R	DR2CON		
228	1	EMLP (27x12.5) R	0217CB	25A	
227	1	EMLP (27x12.5) R	BIP.2CR		
226					
225	1	EMLP (27x12.5) R	DR1		
224	1	EMLP (27x12.5) R	DR1CON		
223	1	EMLP (27x12.5) R	0207CB	25A	
222	1	EMLP (27x12.5) R	BIP.1CR		
221					
220					
219					
218	1	EMLP (27x12.5) R	0148AC	8000BTU A/C	
217	1	EMLP (27x12.5) R	0148CB	5A	
216					
215					
214	1	EMLP (27x12.5) R	0142PS	24VDC 10A	
213	1	EMLP (27x12.5) R	0142CB	10A	
212	1	US-EML (D12.5)	PE		
211					
210	A/R	US-EML (D12.5)	⏚		
209	1	EMLP (27x12.5) R	N		
208	1	EMLP (27x12.5) R	1L3		
207	1	EMLP (27x12.5) R	1L2		
206	1	EMLP (27x12.5) R	1L1		
205	1	EMLP (27x12.5) R	0109CB	45A	MAIN
204	1	EMLP (45x25) R	INCOMING SUPPLY	480/277V 3PH	60Hz
203					
202	3	TRJ2	BANK *		
201	1	TRJ1	PDC *		

TROJANUV

3020 GORE ROAD, LONDON, ONTARIO, CANADA, N5V 4T7

COPYRIGHT © TROJAN TECHNOLOGIES, 2022 . ALL RIGHTS RESERVED.

DESCRIPTION: PDC, UVSIGNA EL CENTRO CA
LAMICOID BILL OF MATERIALS

REVISED BY	PSL
CHECKED BY	FE
APPROVED BY	PSL
APPROVAL DATE YYYY-MM-DD	2022-06-03

DWG NO. 341010G | REV A

0 0.5 1.0 — 1.0" ON ORIGINAL DWG

SCALE: NTS | SHEET 50 OF 50 | SIZE D

H2OMIT VENT DRAINS

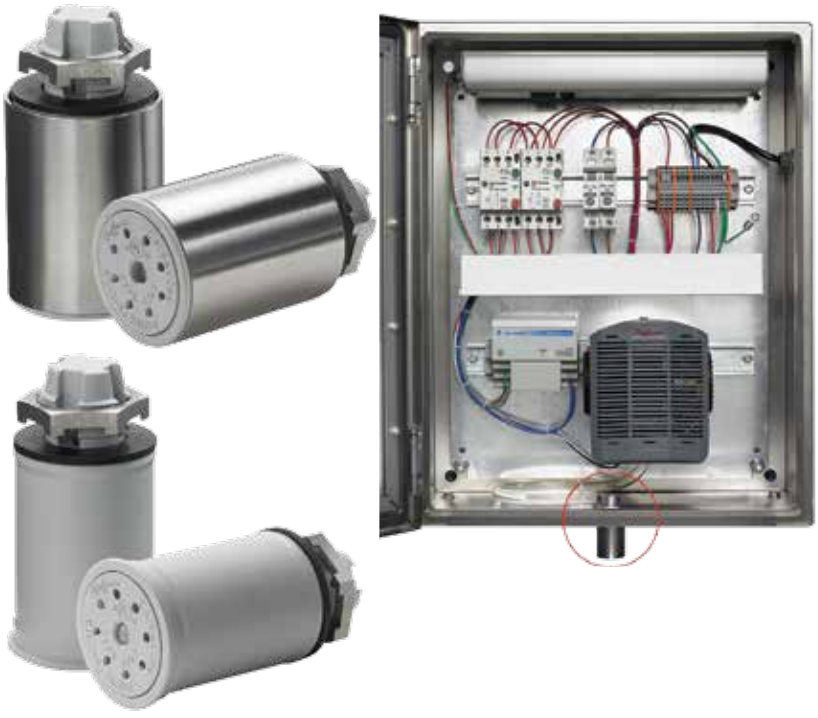

INDUSTRY STANDARDS

Maintains UL/cUL Type 4, 4X rating when properly installed on a UL/cUL Type 4 or 4X enclosure.

UL 508A Listed; Type 4, 4X; File No. E61997
cUL Listed per CSA C22.2 No 94; Type 4, 4X; File No. E61997

NEMA/EEMAC Type 4, 4X
IEC 60529, IP66

APPLICATION

H2OMIT Vent Drains allow accumulated water to drain out the bottom of an enclosure. The UL-approved vent drains also function as an air pressure equalizer, reducing the harmful effects of temperature-induced vacuums that could pull water and moisture into the enclosure.

FEATURES

- Uses gravity to remove collected liquids
- One-way mechanical shut-off when pressure is equalized prevents water and contaminants from entering the enclosure
- Helps reduce corrosion that can limit the life of internal electrical and electronic components
- Installs in a 7/8-in. hole in the bottom of enclosure with provided nut or in a 1/2-in. NPT/NPS threaded conduit hub
- Installs in the bottom of mild steel, aluminum, stainless steel or non-metallic enclosures
- Maintains enclosure's UL Type rating when properly installed

SPECIFICATIONS

Stainless Steel Vent Drain

- Corrosion-resistant polyester material with a Type 304 stainless steel sleeve
- 2.00-in. long x 1.38-in outside diameter

Non-Metallic Drain Vent

- Corrosion-resistant polyester material
- 2.00-in. long x 1.25-in. outside diameter

Performance Data H2OMIT Vent Drains

CATALOG NUMBERS		
	AVDR4NM	AVDR4SS4
UNIT CONSTRUCTION		
Description	Non-metallic Vent Drain	Stainless Steel Vent Drain
D (in./mm)	1.25/32	1.38/35
Quantity	1	1

H2OMIT Vent Drains

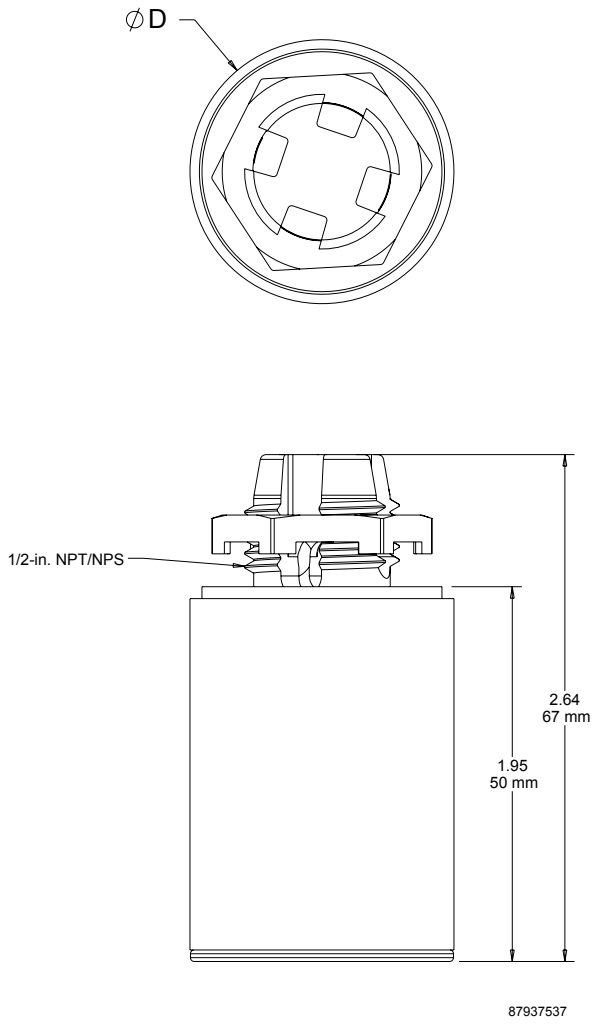

INDUSTRY STANDARDS

UL 508A Listed; File No. E61997
cUL Listed per C22.2 No. 14; File No. E61997

CE

APPLICATION

The H2OMIT Thermoelectric Dehumidifier removes moisture from the air within an enclosure, providing an inexpensive yet highly effective way to protect electronic and electrical components from condensation.

FEATURES

- Reduces corrosion that can limit the life of internal electrical and electronic components
- Condenses moisture from internal enclosure air and standing liquids
- Built-in drain provision with plastic hose directs collected moisture to the Vent Drain (sold separately)
- Rotating side air vents direct recirculating air away from critical controls
- Mounts via DIN rail on internal panel or mounts directly onto the inside bottom of enclosure above the Vent Drain (sold separately)
- Can be used in mild steel, aluminum, stainless steel and non-metallic enclosures

SPECIFICATIONS

- High-impact ABS shell
- Operates on 24-Volt DC power
- 4.5 A max. (84 W)
- Runs continuously above 32 F[a] (power supply not included)
- Removes 8 oz. of moisture in 24 hours
- Compact 6.00-in. x 5.50-in. x 5.75-in. design
- One Thermoelectric Dehumidifier includes:
  - Four feet of plastic hose
  - Two hose retainers
  - One double-ended hose retainer
  - Six inches of Velcro®
  - Seven-inch strip of DIN rail
  - Two mounting screws

Must be used with UL-certified drain to remove pooled liquid from enclosure.
[a]If continual operation is not desired, a Mechanical Hygrostat (AMHUM) can be wired to the thermoelectric dehumidifier and then set to turn the dehumidifier on at the desired relative humidity.

VELCRO is a trademark of Velcro Industries B.V.

Performance Data H2OMIT Thermoelectric Dehumidifier

CATALOG NUMBERS																			
H2OMITTER																			
Dew Point Temperature : Percent Relative Humidity																			
Temp. (° F)	**100%**	**95%**	**90%**	**85%**	**80%**	**75%**	**70%**	**65%**	**60%**	**55%**	**50%**	**45%**	**40%**	**35%**	**30%**	**25%**	**20%**	**15%**	**10%**
110	110	108	106	104	**102**	100	98	95	93	90	87	84	80	76	72	65	60	51	41
105	105	103	101	99	**97**	95	93	91	88	85	83	80	76	72	67	62	55	47	37
100	100	99	97	95	**93**	91	89	86	84	81	78	75	71	67	63	58	52	44	32
95	95	96	92	90	**88**	86	87	81	79	76	73	70	67	63	59	54	48	40	32
90	90	88	87	85	**83**	81	79	79	74	71	68	65	62	59	54	49	43	36	32
85	**85**	**83**	**81**	**80**	**78**	76	74	71	69	67	64	61	58	54	50	45	38	32	—
80	80	78	77	75	73	71	69	67	65	62	59	56	53	50	45	40	35	32	—
75	75	73	72	70	68	66	64	62	60	58	55	52	49	45	41	36	32	—	—
70	70	68	67	65	63	61	59	58	55	53	50	47	44	40	37	32	—	—	
65	65	63	62	60	59	57	55	53	50	48	45	42	40	36	62	—	—	—	—
60	60	58	57	55	53	52	50	48	45	43	41	38	35	32	—	—	—	—	—
55	55	53	52	50	49	47	45	43	40	38	36	33	32	—	—	—	—	—	—
50	50	48	46	45	44	42	40	38	36	34	32	—	—	—	—	—	—	—	—
45	45	43	42	40	39	37	35	34	32	—	—	—	—	—	—	—	—	—	—
40	40	39	37	35	34	32	—	—	—	—	—	—	—	—	—	—	—	—	—
35	35	34	32	—	—	—	—	—	—	—	—	—	—	—	—	—	—	—	—
32	32	—	—	—	—	—	—	—	—	—	—	—	—	—	—	—	—	—	—

Definition: Dew Point is the temperature at which condensation forms. If the temperature of the enclosure is 85 F and the relative humidity is 80 percent, Dew Point is reached at a temperature of 78 F or below.
This means that moisture vapor will condense on any surface that is below the Dew Point temperature of 78 F.

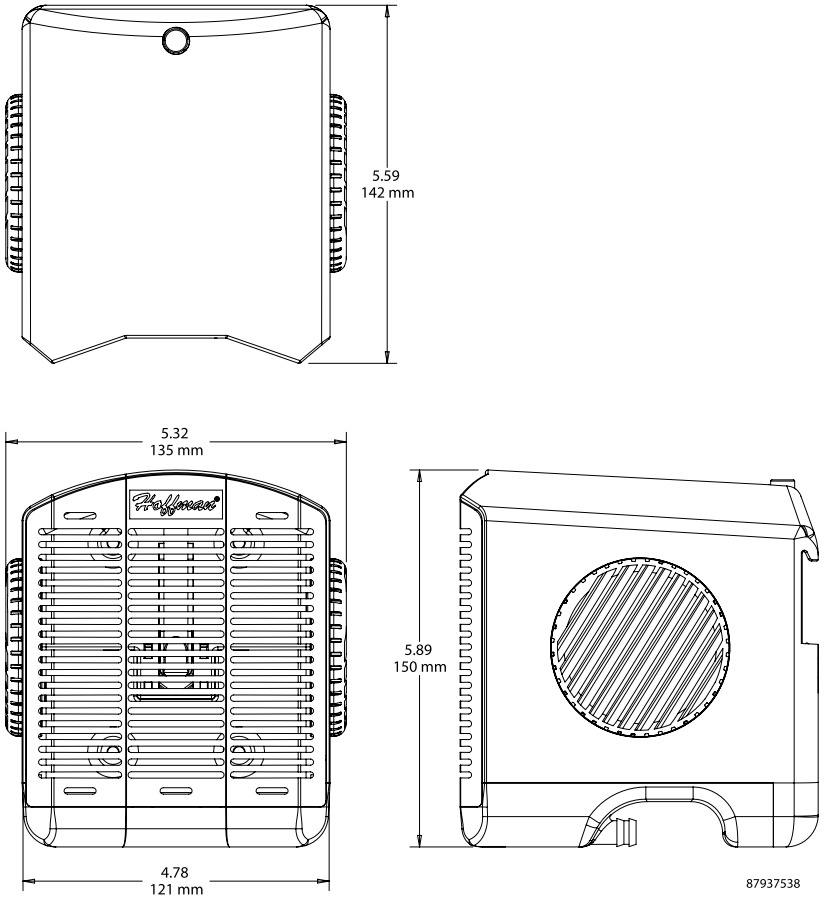

VHB™ Acrylic Foam Tape 4930

Product Data Sheet

Updated : Sept 2002
Supersedes : November 2001

Product Description

VHB Joining Systems utilise firm acrylic adhesives which have excellent long term holding power. The peel adhesion and tensile holding power of products in the VHB family are significantly higher then typical pressure sensitive tape products. Resistance to solvents, temperature extremes, and U. V. Light make VHB products suitable for many interior and exterior applications.

Physical Properties
Not for specification purposes

Adhesive Type	
Thickness (ASTM D-3652) Tape Liner Total	 0.64 mm 0.08 mm 0.72 mm
Foam Density	800 kg/m³
Adhesive Carrier	Acrylic Foam (Closed Cell)
Release Liner	Printed Paper White printed Red 3M VHB™
Tape Colour	White
Shelf Life	24 months from date of despatch by 3M when stored in the original carton at 20°C & 50 % Relative Humidity

Performance Characteristics
Not for specification purposes

Peel Adhesion to Stainless Steel 90° peel @ room temp, 72 hr dwell, jaw speed 300mm/min	35 N/10mm	
Static Shear Strength weight held for 10,000 mins to stainless steel with ½ sq in (3.23 sq cm) overlap	1500 g @ 20°C 500 g @ 65°C 500 g @ 90°C	
Temperature Performance Max (minutes/hours) Max Continuous (days/weeks)	 150 °C 90 °C	
Normal Tensile (T-Block) to Aluminium at room temp, 6.45 sq cm, jaw speed 50 mm/min	1100 kPa	
Solvent Resistance	No apparent degradation when exposed to splash testing of most solvents including gasoline, JP-4 jet fuel, mineral spirits, motor oil, ammonia cleaner, acetone, methyl ethyl ketone. 20 seconds air dry.	
UV Light Resistance	Excellent	

Additional Product Information

Bond strength is dependent upon the amount of adhesive-to-surface contact developed. Firm application pressure develops better adhesive contact and thus improving bond strength.

To obtain optimum adhesion, the bonding surfaces must be clean, dry and well unified. Typical surface cleaning solvents are isopropyl alcohol/water mixture (rubbing alcohol) or heptane. Use proper safety precautions for handling solvents.

It may be necessary to seal or prime some substrates prior to bonding.

a. Most porous or fibred materials (e.g. wood) will require sealing to provide a unified surface.

b. Some materials (e.g. copper, brass, plasticised vinyl) will require priming or coating to prevent interaction between adhesive and substrates.

Ideal tape application temperature range is 20 to 40°C. Initial tape application to surfaces at temperatures below 10°C is not recommended because the adhesive becomes too firm to adhere readily. However, once properly applied, low temperature holding is generally satisfactory.

In some cases bond strength can be increased and ultimate bond strength can be achieved more quickly by exposure of the bond to elevated temperatures (e.g. 65°C) for one hour. This provides better adhesive wetout on to the substrates.

CAUTION

The following situations must be evaluated thoroughly to determine whether VHB products are suitable for the intended use.

1. Applications of 4930 which require performance at severe cold temperatures must be thoroughly evaluated, if the expected use will subject the VHB Joining System fastener to high impact stresses. For cold temperature applications from 0 to 10°C use 4943.

Date : Sept 2002
VHB™ Acrylic Foam Tape
4930

Applications

VHB Joining Systems are suited for use in many interior and exterior industrial applications. In many situations, they can replace rivets, spot welds, liquid adhesives, and other permanent fasteners. Each product in the VHB family has specific strengths. These can include high tensile, shear and peel adhesion and resistance to solvents, moisture and plasticiser migration. All VHB tapes should be thoroughly evaluated by the user under actual use conditions with intended substrates, especially if expected use involved extreme environmental conditions.

VHB Joining Systems are suitable for bonding a variety of substrates, including sealed wood, many plastics, composites and metals. Plastics which can be a problem are polyethylene, polypropylene, PTFE, silicones and other low surface energy materials.

Plasticised vinyl bonding is dependent upon the types and concentrations of plasticisers which can migrate into the adhesives causing a reduction in bond strength; 4945 is most resistant to plasticiser migration.

Galvanised surfaces are potential problems and should be carefully evaluated.

To prevent corrosion on copper and brass, only lacquer coated material should be used with VHB Joining Systems.

Thorough evaluations are recommended when bonding is required to any questionable surface.

3M and VHB are trademarks of the 3M Company.

Values presented have been determined by standard test methods and are average values not to be used for specification purposes. Our recommendations on the use of our products are based on tests believed to be reliable but we would ask that you conduct your own tests to determine their suitability for your applications.
This is because 3M cannot accept any responsibility or liability direct or consequential for loss or damage caused as a result of our recommendations.

Tapes & Adhesives

© 3M United Kingdom PLC 1996

3M United Kingdom PLC
3M House,
28 Great Jackson Street,
Manchester,
M15 4PA

Product Information :

Tel 0870 60 800 50
Fax 0870 60 700 99

3M Ireland
3M House, Adelphi Centre,
Upper Georges Street,
Dun Laoghaire,Co. Dublin,
Ireland

Customer Service :

Tel (01) 280 3555
Fax (01) 280 3509

Electronic Hygrotherm

Application

The Electronic Hygrotherm senses ambient temperature and relative air humidity and adjusts a connected device to maintain temperature and humidity set points.

Features

- Temperature (32-140 F) and humidity (50%-90% RH) adjustment
- High switching capacity
- Optical function displays (LED) in each control
- Long service life (100,000 cycles NO) (50,000 cycles, NC)
- Mounting clip for 35-mm DIN rail
- Change-over contact (relay)
- Connection: 5-pole terminal for AWG 14 max (2.5-mm square)
- Plastic housing UL94V-0
- Vertical mounting
- Maximum switching capacity:
  - 120 VAC 8A (Resistive Load)
  - 240 VAC 8A (Resistive Load)
  - 120 VAC 3A (Inductive Load)
  - 240 VAC 3A (Inductive Load)
  - 24 VDC 4A

Industry Standards

CE

cURus; File No. E164102

Finish

Light-gray plastic UL94V-0

Bulletin: D85

Standard Product

Catalog Number	AxBxC in.	AxBxC mm	Hysteresis	Humidity Set Point (adjustable)	Temperature Set Point (adjustable) (°F)	Operating Temperature Range (°C)	Storage Temperature (°F)	Storage Temperature (°C)
ATEMHUM	3.03 x 2.36 x 1.69	77 x 60 x 43	~ 3.6 F (2K) ± 1.8 F (1K) tolerance	50-90% RH	32 to 140	0 to 60	-4 to 176	-20 to 80

Relay Output

Contacts	Close at...	Open at...	Use for
3 and 5	humidity rise or temperature drop	humidity drop or temperature rise	heaters, dehumidifiers, low-temp alarms
4 and 5	humidity drop or temperature rise	humidity rise or temperature drop	cooling, humidifiers, high-temp alarms

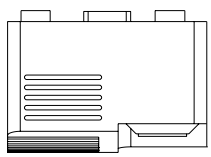

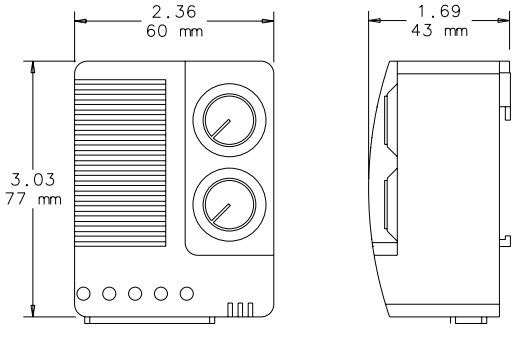

87939706

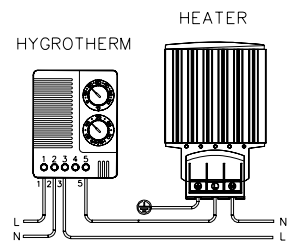

EXAMPLE OF CONNECTION

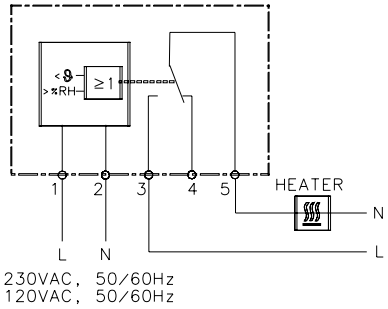

CONNECTION DIAGRAM

© 2009 Hoffman Enclosures Inc.

Mechanical Hygrostat

Application

The Mechanical Hygrostat controls relative air humidity inside an enclosure to prevent condensation and corrosion that can damage components. It can also be connected to an enclosure heater, cooling fans, warning lights or other devices.
The critical relative humidity (RH) level for most components is 65 percent. Above 65 percent RH, condensation can form and cause electronic equipment to malfunction.

Features

- Adjustable relative humidity range
- High switching capacity
- Long service life (>100,000 cycles)
- Maximum permissible air velocity of 50 ft./sec. (15 m/s)
- Maximum switching voltage = 250 VAC
  250 V should be switched only in a non-condensing environment
- Change-over contact
- Mounting clip for 35-mm DIN rail
- Connection: 3-pole terminal for AWG 14 max. (2.5-mm squared)
- Contact resistance less than 10 mΩ

Finish

Light-gray plastic, UL94V-0

Bulletin: D85

Industry Standards

CE

Standard Product

Catalog Number	AxBxC in.	AxBxC mm	Switching Capacity (Minimum)	Switching Capacity (Maximum)	Operating Temperature Adjustable) (°F)	Operating Temperature (Adjustable) (°C)	Storage Temperature (°F)	Storage Temperature (°C)	Setting Range
AMHUM	2.64 x 1.97 x 1.50	67 x 50 x 38	100mA @ AC/DC 20 V	5A @ AC 250 V (resistive load) 0.2A @ AC 250 V (inductive load at cos 0 = 0.8) DC 20W	32 to 140	0 to 60	-4 to 176	-20 to 80	35 to 95% RH

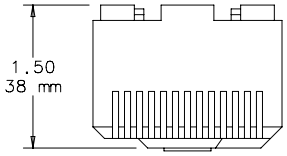

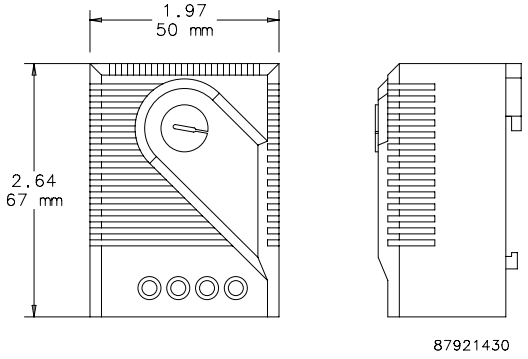

© 2009 Hoffman Enclosures Inc.

Dual Thermostat

Industry Standards

CE
CSA File No. 215952

cURus; File No. E164102

Application

Two thermostats in one, the Dual Thermostat independently controls equipment heating and cooling systems.

Features

- Two thermostats; one normally closed (NC), red, and one normally open (NO), blue, in one casing
- Wide adjustable temperature range (32 -140 F)
- Thermostatic bimetallic sensor element
- Connection: 4-pole terminal for AWG 14 max (2.5 mm ^{2})
- Mounting clip for 35-mm DIN rail

Finish

Light-gray plastic, UL94V-0

Bulletin: D85

Standard Product

Catalog Number	AxBxC in.	AxBxC mm	Switching Capacity (Normally Closed)	Switching Capacity (Normally Open)	Setting Range (Normally Closed)	Setting Range (Normally Open)
ADLTEMP	2.64 x 1.97 x 1.81	67 x 50 x 46	10 A resistive/2 A inductive @250 VAC, DC 30 W	5 A resistive/2 A inductive @250 VAC, DC 30 W	32-140 F	32-140 F

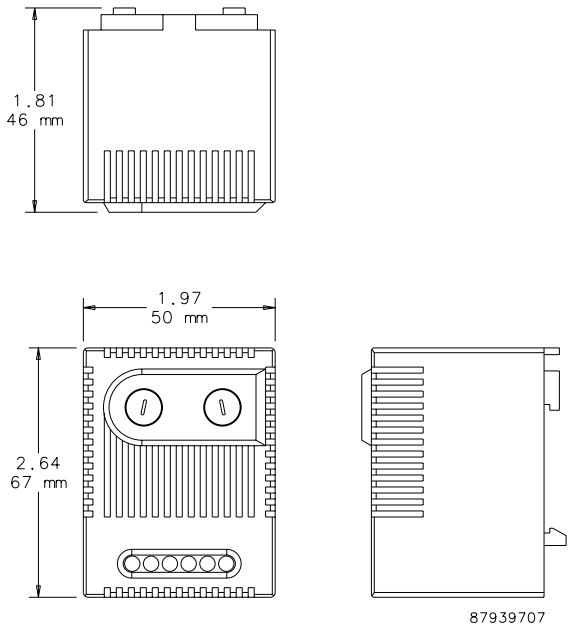

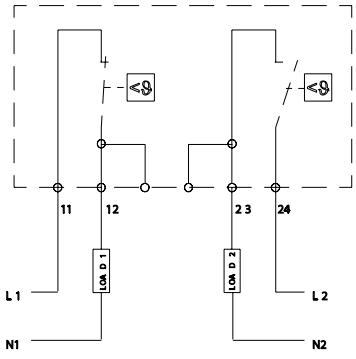

CONNECTION DIAGRAM

© 2009 Hoffman Enclosures Inc.

Temperature Control Switches

Features

- Additional label for conversion to Celsius scale and blank label to cover set point range label when adjustment after initial setting is not desired are included
- Bimetal temperature sensor
- Plastic housing
- Connections consist of tubular screw terminals for AWG 14 (.04 sq. in.)
- Provision for both panel mounting and DIN rail mounting

Finish

Molded plastic housing is black

Bulletin: D85

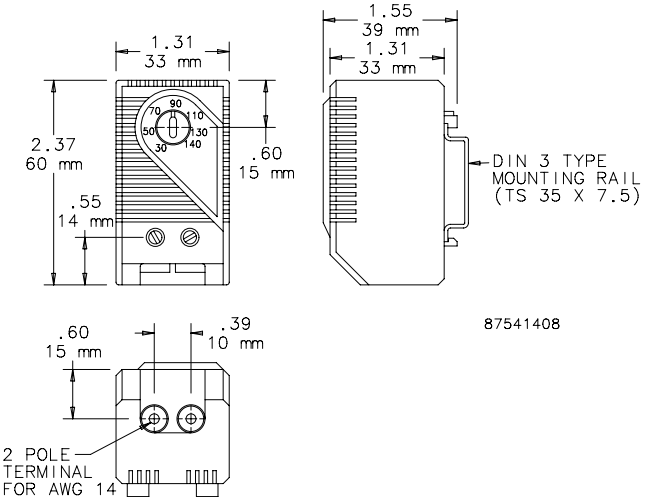

Industry Standards

cURus; File No. E164102
UL94-VO

Protection rating IEC IP30
CSA Certified, File Number 215952
CE

Application

These easy-to-install thermostats regulate and monitor air temperature in enclosures that contain heat-emitting equipment. Thermostats prolong heater and fan life expectancy by controlling operation time and increase electrical component working efficiency by exposing them to fewer environmental contaminants.

Standard Product

Catalog Number	Contact Type	Control Application
ATEMNC	NC (normally closed), quick acting	Heater
ATEMNO	NO (normally open), quick acting	Fan

Switching Capacity

Load	Amps
Maximum load	15 A resistive / 2 A inductive @ 120 VAC
	10 A resistive / 2 A inductive @ 250 VAC
	DC 30 W
Minimum load	20 mA (all voltages)

© 2009 Hoffman Enclosures Inc.

Current and voltage monitoring relays, single-phase
Ordering details - Current monitoring relays

CM-SRS.22S

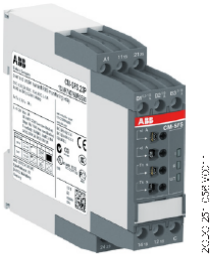

CM-SFS.22P

Description

The CM range current monitoring relays protect single-phase mains (DC or AC) from over- and undercurrent from 3 mA to 15 A.

Ordering details

Description	Type	Order code	Price 1 pc	Weight (1 pc) kg (lb)
See "Selection table - Current monitoring relays" on page 2/11.	CM-SRS.11S	1SVR730840R0200		0.145 (0.320)
		1SVR730841R0200		0.161 (0.355)
		1SVR730841R1200		0.161 (0.355)
	CM-SRS.11P	1SVR740840R0200		0.137 (0.302)
		1SVR740841R0200		0.153 (0.337)
		1SVR740841R1200		0.153 (0.337)
	CM-SRS.12S	1SVR730840R0300		0.137 (0.302)
		1SVR730841R0300		0.168 (0.370)
		1SVR730841R1300		0.168 (0.370)
	CM-SRS.21S	1SVR730840R0400		0.152 (0.335)
		1SVR730841R0400		0.179 (0.395)
		1SVR730841R1400		0.179 (0.395)
	CM-SRS.21P	1SVR740840R0400		0.141 (0.311)
		1SVR740841R0400		0.168 (0.370)
		1SVR740841R1400		0.168 (0.370)
	CM-SRS.22S	1SVR730840R0500		0.144 (0.399)
		1SVR730841R0500		0.181 (0.399)
		1SVR730841R1500		0.181 (0.399)
	CM-SRS.M1S	1SVR730840R0600		0.153 (0.337)
	CM-SRS.M1P	1SVR740840R0600		0.142 (0.313)
	CM-SRS.M2S	1SVR730840R0700		0.155 (0.342)
	CM-SFS.21S	1SVR730760R0400		0.150 (0.331)
	CM-SFS.21P	1SVR740760R0400		0.139 (0.306)
	CM-SFS.22S	1SVR730760R0500		0.158 (0.348)

S: screw connection
P: push-in connection

Further documentation single-phase monitoring relays on www.abb.com

Part Number: 3106A

RS-485, (1 pr) 22 AWG (7x30) TC & (1) 22 AWG (7x30) TC, FHDPE/PVC, Foil+TC Braid Shld, CM, PLTC

Product Description

One 22 AWG pair stranded (7x30) tinned copper conductors & one 22 AWG stranded (7x30) tinned copper conductor, Datalene® (FHDPE) insulation, twisted pairs, overall Beldfoil® shield (100% coverage) plus a tinned copper braid (65% coverage), PVC jacket.

Technical Specifications

Physical Characteristics (Overall)

Conductor

AWG	Stranding	Material	Nominal Diameter	No. of Conductors	No. of Pairs
22	7x30	TC - Tinned Copper	0.03 in	1	1

Total Number of Conductors:	3

Insulation

Material	Material Trade Name
FHDPE - Foam High Density Polyethylene	Datalene®

Color Chart

Number	Color
1	White/Orange Stripe
2	Orange/White Stripe
3	Blue/White Stripe

Outer Shield Material

Type	Layer	Material	Material Trade Name	Coverage [%]	Drainwire Material	Drainwire AWG	Drainwire Construction n x D
Tape	1	Aluminum Foil-Polyester Tape	Beldfoil®	100 %	TC - Tinned Copper	22	7x30 mm
Braid	2	TC - Tinned Copper		65 %			

Outer Jacket Material

Material	Nominal Diameter
PVC - Polyvinyl Chloride	0.3 in

Construction and Dimensions

Stranding

Lay Length
3 in

Print Legend:	BELDEN 3106A E34972 3C22 SHIELDED (UL) CM OR PLTC SUN RES OR C(UL) CM --- FT4

Electrical Characteristics

Capacitance

Nom. Capacitance Conductor to Conductor	Nom. Capacitance Conductor to Other Conductor to Shield
11 pF/ft	20.9 pF/ft

Conductor DCR

Nominal Conductor DCR	Nominal Outer Shield DCR
14.7 Ohm/1000ft	2.8 Ohm/1000ft

Impedance

Nominal Characteristic Impedance	Nominal Characteristic Impedance Description
120 Ohm	120

High Frequency (Nominal/Typical)

Nom. Insertion Loss
0.5 dB/100ft

Delay

Nominal Velocity of Propagation (VP) [%]
78 %

Current

Max. Recommended Current [A]
2.7 Amps per conductor @ 25°C

Inductance

Nominal Inductance
0.203 µH/ft

Voltage

UL Voltage Rating
300 V RMS (NEC Type PLTC)
300 V RMS (NEC Type CM)

Temperature Range

Non-UL Temp Rating:	60°C
UL Temp Rating:	60°C
Operating Temp Range:	-20°C To +60°C

Mechanical Characteristics

Bulk Cable Weight:	48(lbs/1000ft)
Max Recommended Pulling Tension:	65(lbs)
Min Bend Radius/Minor Axis:	3(in)

Standards

NEC/(UL) Specification:	CM, PLTC
CEC/C(UL) Specification:	CM
CPR Euroclass:	Eca

Applicable Environmental and Other Programs

EU Directive 2000/53/EC (ELV):	Yes
EU Directive 2002/96/EC (WEEE):	Yes
EU Directive 2003/11/EC (BFR):	Yes
EU Directive 2011/65/EU (ROHS II):	Yes
EU Directive 2015/863/EU:	Yes
EU Directive Compliance:	EU Directive 2003/11/EC (BFR)
EU CE Mark:	Yes
EU RoHS Compliance Date (yyyy-mm-dd):	2005-10-01
CA Prop 65 (CJ for Wire & Cable):	Yes
MII Order #39 (China RoHS):	Yes

Suitability

Suitability - Oil Resistance:	Yes
Suitability - Sunlight Resistance:	Yes

Flammability, LS0H, Toxicity Testing

UL Flammability:	UL1685 UL Loading
CSA Flammability:	FT1

Part Number

Plenum (Y/N):	No

Variants

Item #	Color
3106A.00152	BLACK
3106A.001525	BLACK
3106A.00305	BLACK
3106A 0101000	BLACK
3106A 010500	BLACK
3106A 0105000	BLACK

© 2018 Belden, Inc

All Rights Reserved.

Although Belden makes every reasonable effort to ensure their accuracy at the time of this publication, information and specifications described here in are subject to error or omission and to change without notice, and the listing of such information and specifications does not ensure product availability.

Belden provides the information and specifications herein on an "ASIS" basis, with no representations or warranties, whether express, statutory or implied. In no event will Belden be liable for any damages (including consequential, indirect, incidental, special, punitive, or exemplary damages) whatsoever, even if Belden has been advised of the possibility of such damages, whether in an action under contract, negligence or any other theory, arising out of or in connection with the use, or inability to use, the information or specifications described herein.

All sales of Belden products are subject to Belden's standard terms and conditions of sale.

Belden believes this product to be incompliance with EU RoHS(Directive 2002/95/EC, 27-Jan-2003). Material manufactured prior to the compliance date may be instock at Belden facilities and in our Distributor's inventory. The information provided in this Product Disclosure, and the identification of materials listed as reportable or restricted within the Product Disclosure, is correct to the best of Belden's knowledge, information, and belief at the date of its publication. The information provided in this Product Disclosure is designed only as a general guide for the safe handling, storage, and any other operation of the product itself or the one that it becomes a part of. This Product Disclosure is not to be considered a warranty or quality specification. Regulatory information is for guidance purposes only. Product users are responsible for determining the applicability of legislation and regulations based on their individual usage of the product.

Belden declares this product to be incompliance with EU LVD (Low Voltage Directive 73/23/EEC), as amended by directive 93/68/EEC.

HellermannTyton

Spiralwrap : 3NFP

Article number: 161-05055

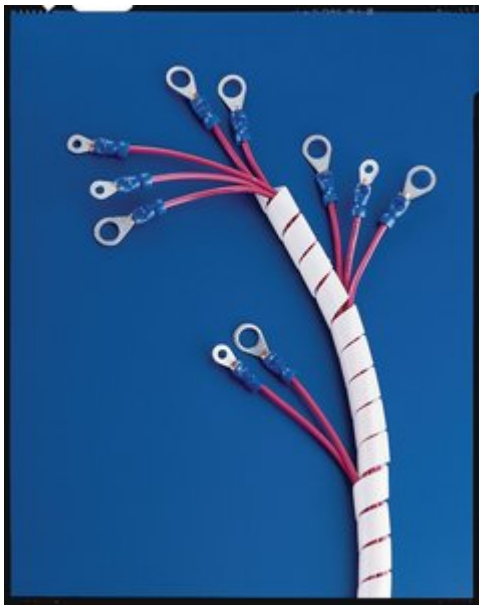

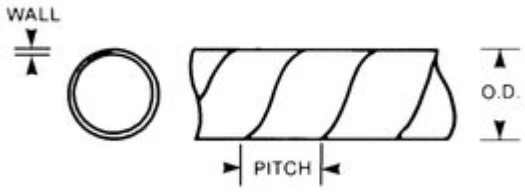

Features

- For organising and protecting wires, cables and tubes
- Wide range of diameters and colours
- Capable of retro-fitting
- Wires can branch out at any point, in any direction

Certifications & Approvals

HF RoHS

More products in this product group

Spiralwrap >

Base Data

Colour	Natural (NA)
Pack Cont.	30.48 m
Package Quantity per	reel
PART DESCRIPTION	3NFP-PE-NA
Product Group	Spiralwrap
Short Description	Spiralwrap, 0.5'' Diameter, PE, Natural, 100ft/Reel
Variant	Spiral Binding

Product Dimensions

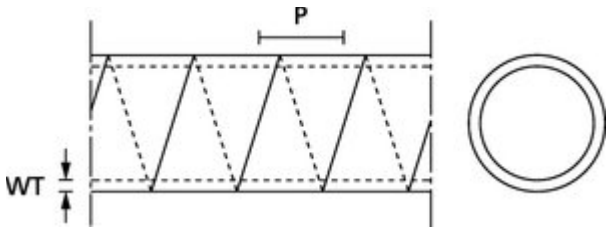

Bundle ø max.	102.0 mm
Bundle ø min.	9.52 mm
Bundlediamter Range ETIM (Braided Sleeving)	9.52-102.0
Diameter (D)	12.7 mm
Length (L)	30.48 m
Nominal ø	12.7 mm
Nominal ø	1/2 "
Pitch (P)	14.3 mm
Pitch (P)	0.56 "
Wall (WT)	1.57 mm
Wall (WT)	0.062 "
ø D	0.5 "

Material and Specifications

CSA Certified	No
Flammability	Flammable
Halogenfree	Yes
Material	Polyethylene (PE)
Operating Temperature - °C	-60 °C to +88 °C
Specifications	HF RoHS
UL Listed (US and Canada)	No
UL Recognized (US and Canada)	Yes
UL-File Number	E147924

Logistics and Packaging

More Information

ETIM 6.0	EC002604
ETIM 7.0 Key	EC002604
UNSPSC Key	39131604

© HellermannTyton 2019

Wire Duct Cutting Tools

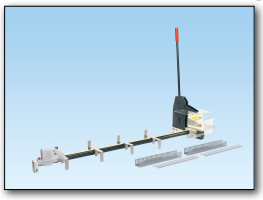

PBDCT –
Bench Mount Duct Cutting Tool

DCT –
Hand-Held Duct Cutting Tool

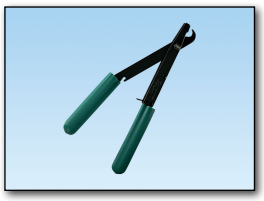

DNT-100 –
Duct Notching Tool

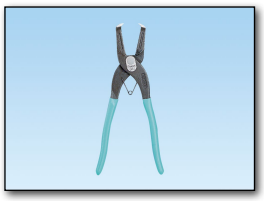

DFCT –
Duct Finger Cutting Tool

Wire Duct Installation Tools

TNR –
Nylon RIvet Installation Tool

Nylon Rivets:
NR1-C – 100 pcs.
NR1-M – 1000 pcs.

Accessories

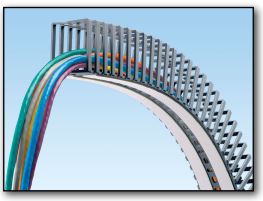

Type FL –
Flexible Wiring Duct; available in lengths of 500mm and in three sizes: 12mm x 12mm, 25mm x 25mm, 50mm x 50mm

Adhesive Tape –
Available in roll form or factory applied on select sizes

Divider Walls

PVC Divider Walls:

Light Gray	White
D2H6 – 2"(H)	**D2HWH6 –** 2"
D3H6 – 3"	**D3HWH6 –** 3"
D4H6 – 4"	**D4HWH6 –** 4"

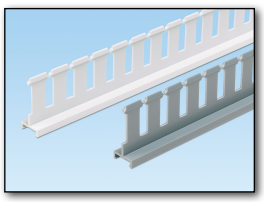

PVC Slotted Divider Walls:

Light Gray	White
SD2H6 – 2"(H)	**SD2HWH6 –** 2"
SD3H6 – 3"	**SD3HWH6 –** 3"
SD4H6 – 4"	**SD4HWH6 –** 4"

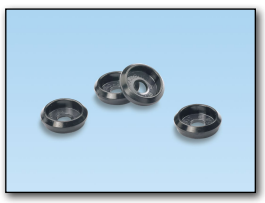

DB-C –
Divider Wall Base for mounting all types of divider walls; halogen-free

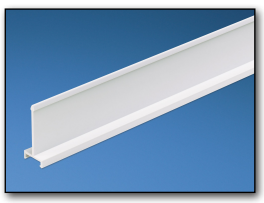

Halogen-Free Divider Walls:
NNC50DWH2 – 50mm (H)
NNC75DWH2 – 75mm
Low Smoke, Halogen-Free:
TNC50D2 – 50mm
TNC75D2 – 75mm

Corner Strips

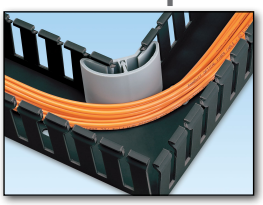

CSC1LG6 –
6 ft. length strip with bend radius control

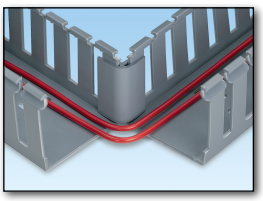

CS1LG6 –
6 ft. length strip

Snap-Clip Mounting Brackets

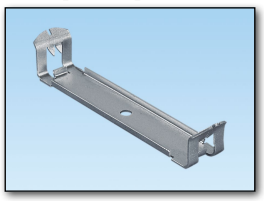

For Wiring Duct Types G, F, FS, and D:
S1F-C – 1" duct width
S1.5F-C – 1.5" duct width
S2F-C – 2" duct width
S3F-C – 3" duct width
S4F-C – 4" duct width

For Wiring Duct Type NE:
SNS.5-C – 0.5' duct width
SNS.75-C – 0.75' duct width
SNS1-C – 1" duct width
SNS1.5-C – 1.5" duct width
SNS2-C – 2" duct width
SNS3-C – 3" duct width

Wire Retainers

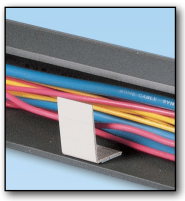

For Type FS and D Wiring Duct:
WRS-A-C10 – for 1" – 2" duct width

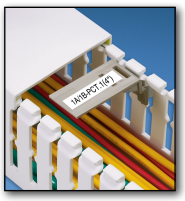

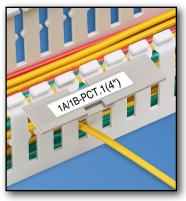

For Type F and HN Wiring Duct:
FWR-C – for 1.5" – 4" duct width
For Type MC Wiring Duct:
FMWR-C – for 1.5" – 4" duct width

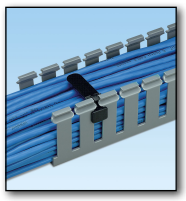

For Type G and H Wiring
WR2-C – for 2" duct width
WR3-C – for 3" duct width
WR4-C – for 4" duct width
WR5-C – for 5" duct width
WR2H-C – for 2" hinged duct

Wire Duct Cutting Tools

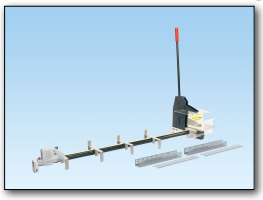

PBDCT –
Bench Mount Duct Cutting Tool

DCT –
Hand-Held Duct Cutting Tool

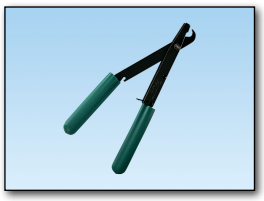

DNT-100 –
Duct Notching Tool

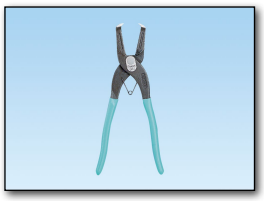

DFCT –
Duct Finger Cutting Tool

Wire Duct Installation Tools

TNR –
Nylon RIvet Installation Tool

Nylon Rivets:
NR1-C – 100 pcs.
NR1-M – 1000 pcs.

Accessories

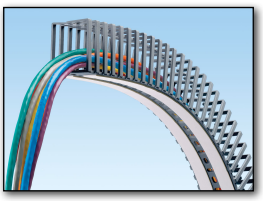

Type FL –
Flexible Wiring Duct; available in lengths of 500mm and in three sizes: 12mm x 12mm, 25mm x 25mm, 50mm x 50mm

Adhesive Tape –
Available in roll form or factory applied on select sizes

Divider Walls

PVC Divider Walls:

Light Gray	White
D2H6 – 2"(H)	**D2HWH6 –** 2"
D3H6 – 3"	**D3HWH6 –** 3"
D4H6 – 4"	**D4HWH6 –** 4"

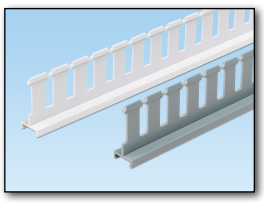

PVC Slotted Divider Walls:

Light Gray	White
SD2H6 – 2"(H)	**SD2HWH6 –** 2"
SD3H6 – 3"	**SD3HWH6 –** 3"
SD4H6 – 4"	**SD4HWH6 –** 4"

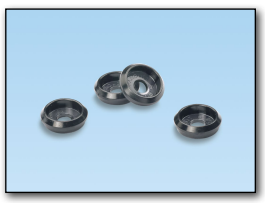

DB-C –
Divider Wall Base for mounting all types of divider walls; halogen-free

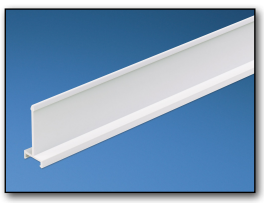

Halogen-Free Divider Walls:
NNC50DWH2 – 50mm (H)
NNC75DWH2 – 75mm
Low Smoke, Halogen-Free:
TNC50D2 – 50mm
TNC75D2 – 75mm

Corner Strips

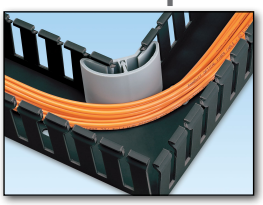

CSC1LG6 –
6 ft. length strip with bend radius control

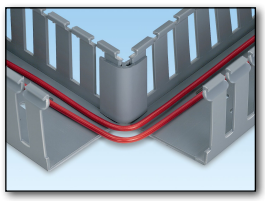

CS1LG6 –
6 ft. length strip

Snap-Clip Mounting Brackets

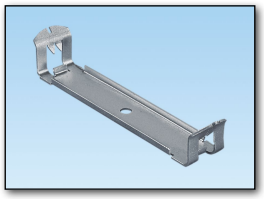

For Wiring Duct Types G, F, FS, and D:
S1F-C – 1" duct width
S1.5F-C – 1.5" duct width
S2F-C – 2" duct width
S3F-C – 3" duct width
S4F-C – 4" duct width

For Wiring Duct Type NE:
SNS.5-C – 0.5' duct width
SNS.75-C – 0.75' duct width
SNS1-C – 1" duct width
SNS1.5-C – 1.5" duct width
SNS2-C – 2" duct width
SNS3-C – 3" duct width

Wire Retainers

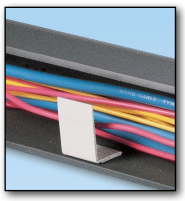

For Type FS and D Wiring Duct:
WRS-A-C10 – for 1" – 2" duct width

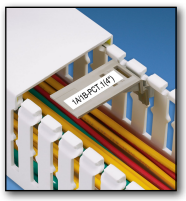

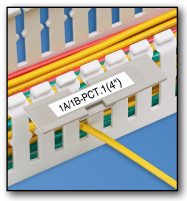

For Type F and HN Wiring Duct:
FWR-C – for 1.5" – 4" duct width
For Type MC Wiring Duct:
FMWR-C – for 1.5" – 4" duct width

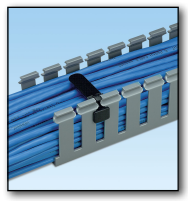

For Type G and H Wiring
WR2-C – for 2" duct width
WR3-C – for 3" duct width
WR4-C – for 4" duct width
WR5-C – for 5" duct width
WR2H-C – for 2" hinged duct

PDC Item 125, 123-121
Wire Duct, Type F LT GRY 1.5 x 2 - Panduit F1.5X2LG6/C1.5LG6 / Trojan P/N 913437-005
Wire Duct, Type F LT GRY 1.5 x 3 - Panduit F1.5X3LG6/C1.5LG6 / Trojan P/N 913437-006
Wire Duct, Type F LT GRY 1 x 3 - Panduit F1X3LG6/C1LG6 / Trojan P/N 913437-004
Wire Duct, Type F LT GRY 2.5 x 3 - Panduit F2.5X3LG6/C2.5LG6 / Trojan P/N 913437-033 Page 1/1

- Narrow slot/finger design provides more slots to fit the spacing of high-density terminal blocks and other hardware
- Material: Lead-free PVC
- UL recognized continuous use temperature: 122°F (50°C)
- UL 94 flammability rating of V-0
- Conforms with NFPA 79-2007 section 13.3.1 requirement for flame retardant material
- Provided with mounting holes
- Base and cover length is 6 feet

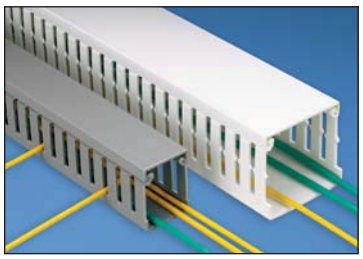

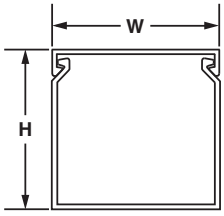

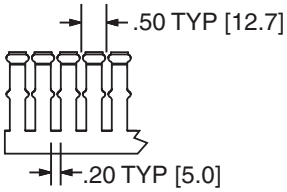

Multiple slot restrictors present with 2" and greater duct wall height.

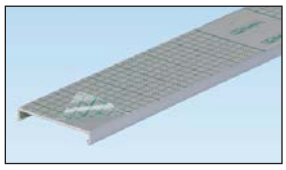

To order cover with protective film add "-F" to part number. 6" cover not available with film.

NEW!

Base Part Number	Duct Size (W x H)* In.	Duct Size (W x H)* mm	Slot Width In.	Slot Width mm	Cover Part Number	Std. Pkg. Qty.	Base Ctn. Qty.	Cover Ctn. Qty.
F.5X.5LG6	0.69 x 0.60	17.5 x 15.2	0.20	5.0	C.5LG6	6	120	120
F.5X1LG6	0.69 x 1.06	17.5 x 26.9	0.20	5.0	C.5LG6	6	120	120
F.75X.75LG6	0.93 x 0.82	23.6 x 20.9	0.20	5.0	C.75LG6	6	120	120
F.75X1.5LG6	0.93 x 1.57	23.6 x 39.9	0.20	5.0	C.75LG6	6	120	120
F1X1LG6	1.26 x 1.13	32.0 x 28.7	0.20	5.0	C1LG6	6	120	120
F1X1.5LG6	1.26 x 1.62	32.0 x 41.1	0.20	5.0	C1LG6	6	120	120
F1X2LG6	1.26 x 2.12	32.0 x 53.8	0.20	5.0	C1LG6	6	120	120
F1X3LG6	1.26 x 3.12	32.0 x 79.2	0.20	5.0	C1LG6	6	120	120
F1X4LG6	1.26 x 4.10	32.0 x 104.1	0.20	5.0	C1LG6	6	60	120
F1.5X1LG6	1.75 x 1.12	44.5 x 28.4	0.20	5.0	C1.5LG6	6	120	120
F1.5X1.5LG6	1.75 x 1.62	44.5 x 41.1	0.20	5.0	C1.5LG6	6	120	120
F1.5X2LG6	1.75 x 2.12	44.5 x 53.8	0.20	5.0	C1.5LG6	6	120	120
F1.5X3LG6	1.75 x 3.12	44.5 x 79.2	0.20	5.0	C1.5LG6	6	120	120
F1.5X4LG6	1.75 x 4.10	44.5 x 104.1	0.20	5.0	C1.5LG6	6	60	120
F2X1LG6	2.25 x 1.12	57.2 x 28.4	0.20	5.0	C2LG6	6	120	120
F2X1.5LG6	2.25 x 1.62	57.2 x 41.1	0.20	5.0	C2LG6	6	120	120
F2X2LG6	2.25 x 2.12	57.2 x 53.8	0.20	5.0	C2LG6	6	120	120
F2X3LG6	2.25 x 3.12	57.2 x 79.2	0.20	5.0	C2LG6	6	60	120
F2X4LG6	2.25 x 4.10	57.2 x 104.1	0.20	5.0	C2LG6	6	60	120
F2X5LG6	2.25 x 5.10	57.2 x 129.5	0.20	5.0	C2LG6	6	60	120
F2.5X3LG6	2.75 x 3.12	69.9 x 79.2	0.20	5.0	C2.5LG6	6	120	120
F3X1LG6	3.25 x 1.12	82.6 x 28.4	0.20	5.0	C3LG6	6	120	120
F3X2LG6	3.25 x 2.12	82.6 x 53.8	0.20	5.0	C3LG6	6	120	120
F3X3LG6	3.25 x 3.12	82.6 x 79.2	0.20	5.0	C3LG6	6	60	120
F3X4LG6	3.25 x 4.10	82.6 x 104.1	0.20	5.0	C3LG6	6	60	120
F3X5LG6	3.25 x 5.10	82.6 x 129.5	0.20	5.0	C3LG6	6	60	120
F4X2LG6	4.25 x 2.12	108.0 x 53.8	0.20	5.0	C4LG6	6	60	120
F4X3LG6	4.25 x 3.12	108.0 x 79.2	0.20	5.0	C4LG6	6	60	120
F4X4LG6	4.25 x 4.10	108.0 x 104.1	0.20	5.0	C4LG6	6	60	120
F4X5LG6	4.25 x 5.10	108.0 x 129.5	0.20	5.0	C4LG6	6	60	120
F6X4LG6	6.25 x 4.15	158.8 x 105.4	0.20	5.0	C6LG6	6	60	120

Part number shown for LG (Light Gray). For other color availability see color selection guide, page C1.48.
Base and cover sold separately.
*"H" dimension includes duct and cover.

1 & 2 CO industrial style power relays
For socket mount or direct connection via Faston connectors

Type 46.52
- 2 CO 8 A

Type 46.61
- 1 CO 16 A

- AC coils & DC coils
- Available with: lockable test button, mechanical indicator & LED indicator
- 8 mm, 6 kV (1.2/50 µs) isolation, coil-contacts
- Cadmium free contacts
- 97 series 35 mm rail (EN 60715) Screw, Screwless or Push-in terminals, and PCB mount sockets
- Coil Indication and EMC suppression modules 99 series and Timer module 86.30 options
- Optional alternative mounting adaptors
- European Patent

	46.52	46.61
	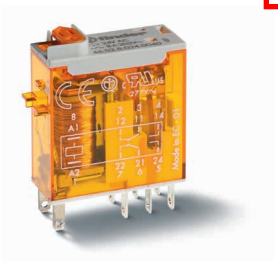	
	• 2 CO 8 A • Plug-in/Solder terminals	• 1 CO 16 A • Plug-in/Faston 187

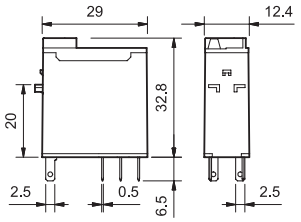

REGISTERED COMMUNITY DESIGN

46.52

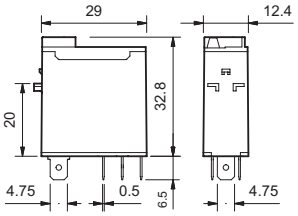

REGISTERED COMMUNITY DESIGN

46.61

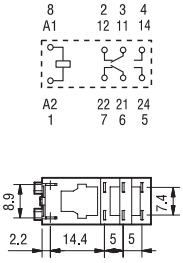

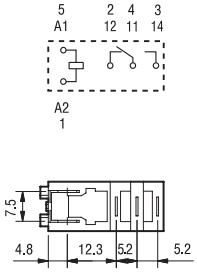

For UL ratings see:
"General technical information" page V

Contact specification				
Contact configuration			2 CO (DPDT)	1 CO (SPDT)
Rated current/Maximum peak current		A	8/15	16/25*
Rated voltage/ Maximum switching voltage		V AC	250/440	250/440
Rated load AC1		VA	2000	4000
Rated load AC15 (230 V AC)		VA	350	750
Single phase motor rating (230 V AC)		kW	0.37	0.55
Breaking capacity DC1: 30/110/220 V		A	6/0.5/0.15	12/0.5/0.15
Minimum switching load		mW (V/mA)	300 (5/5)	300 (5/5)
Standard contact material			AgNi	AgNi
Coil specification				
Nominal voltage (U_N)		V AC (50/60 Hz)	12 - 24 - 48 - 110 - 120 - 230 - 240	
		V DC	12 - 24 - 48 - 110 - 125	
Rated power		VA/W	1.2/0.5	1.2/0.5
Operating range		AC	(0.8…1.1)U_N	(0.8…1.1)U_N
		DC	(0.73…1.1)U_N	(0.73…1.1)U_N
Holding voltage		AC/DC	0.8 U_N / 0.4 U_N	0.8 U_N / 0.4 U_N
Must drop-out voltage		AC/DC	0.2 U_N / 0.1 U_N	0.2 U_N / 0.1 U_N
Technical data				
Mechanical life AC/DC		cycles	$10 \cdot 10^6$	$10 \cdot 10^6$
Electrical life at rated load AC1		cycles	$100 \cdot 10^3$	$100 \cdot 10^3$
Operate/release time		ms	10/3	15/5
Insulation between coil and contacts (1.2/50 µs)		kV	6 (8 mm)	6 (8 mm)
Dielectric strength between open contacts		V AC	1000	1000
Ambient temperature range		°C	–40…+70	–40…+70
Environmental protection			RT II	RT II
Approvals (according to type)				

* With the $AgSnO_2$ material the maximum peak current is 80 A - 5 ms on normally open contact.

XI-2016, www.findernet.com

A

Ordering information

Example: 46 series Miniature industrial relay, 1 CO, 24 V DC coil, lockable test button and mechanical indicator.

								A		B	C	D	
4	6	.	6	1	.	9	.	0	2	4	.	0	0	4	0

Series

Type
5 = Spade/blade solder terminal (2.5 x 0.5)mm
6 = Spade/blade terminal Faston 187 (4.8 x 0.5)mm

No. of poles
1 = 1 pole, 16 A
2 = 2 poles, 8 A

Coil version
9 = DC
8 = AC (50/60 Hz)

Coil voltage
See coil specifications

A: Contact material
0 = AgNi
4 = $AgSnO_2$ (46.61 only)
5 = AgNi + Au

B: Contact circuit
0 = CO (nPDT)

D: Special versions
0 = Standard

C: Options
2 = Mechanical indicator
4 = Lockable test button + mechanical indicator
54 = Lockable test button + LED (AC) + mechanical indicator
74 = Lockable test button + double LED (DC non-polarized) + mechanical indicator

Selecting features and options: only combinations in the same row are possible.
Preferred selections for best availability are shown in **bold**.

Type	Coil version	A	B	C	D
46.52	AC - DC	**0** - 5	**0**	2 - **4**	**0**
	AC	0 - 5	0	54	/
	DC	0 - 5	0	74	/
46.61	AC - DC	**0** - 4 - 5	**0**	2 - **4**	**0**
	AC	0 - 4 - 5	0	54	/
	DC	0 - 4 - 5	0	74	/

Special versions for Rail Applications on request

Descriptions: Options

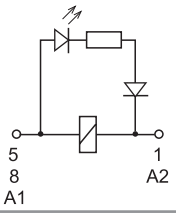

C: Option 54
LED (AC)

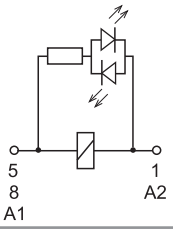

C: Option 74
LED (DC, non-polarized)

Lockable test button and mechanical flag indicator (0040, 0054, 0074)
The dual-purpose Finder test button can be used in two ways:
Case 1) The plastic pip (located directly below the test button) remains intact. In this case, when the test button is pushed, the contacts operate. When the test button is released the contacts return to their former state.
Case 2) The plastic pip is broken-off (using an appropriate cutting tool). In this case, (in addition to the above function), when the test button is pushed and rotated, the contacts are latched in the operating state, and remain so until the test button is rotated back to its former position.
In both cases ensure that the test button actuation is swift and decisive.

XI-2016, www.findernet.com

Technical data

Insulation according to EN 61810-1						
			1 pole		2 pole	
Nominal voltage of supply system		V AC	230/400		230/400	
Rated insulation voltage		V AC	250	400	250	400
Pollution degree			3	2	3	2
Insulation between coil and contact set						
Type of Insulation			Reinforced (8 mm)		Reinforced (8 mm)	
Overvoltage category			III		III	
Rated impulse voltage		kV (1.2/50 µs)	6		6	
Dielectric strength		V AC	4000		4000	
Insulation between adjacent contacts						
Type of insulation			—		Basic	
Overvoltage category			—		III	
Rated impulse voltage		kV (1.2/50 µs)	—		4	
Dielectric strength		V AC	—		2000	
Insulation between open contacts						
Type of disconnection			Micro-disconnection		Micro-disconnection	
Dielectric strength		V AC/kV (1.2/50 µs)	1000/1.5		1000/1.5	
Conducted disturbance immunity						
Burst (5…50)ns, 5 kHz, on A1 - A2			EN 61000-4-4		level 4 (4 kV)	
Surge (1.2/50 µs) on A1 - A2 (differential mode)			EN 61000-4-5		level 3 (2 kV)	
Other data			**46.61**		**46.52**	
Bounce time: NO/NC		ms	2/6		1/4	
Vibration resistance (10…150)Hz: NO/NC		g	20/12		20/15	
Shock resistance		g	20		20	
Power lost to the environment	without contact current	W	0.6		0.6	
	with rated current	W	1.6		2	
Recommended distance between relays mounted on PCB		mm	≥ 5			

Contact specification

F 46 - Electrical life (AC) v contact current
Type 46.52

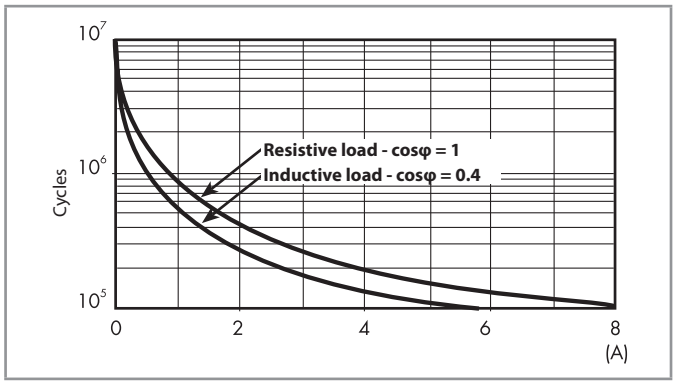

F 46 - Electrical life (AC) v contact current
Type 46.61

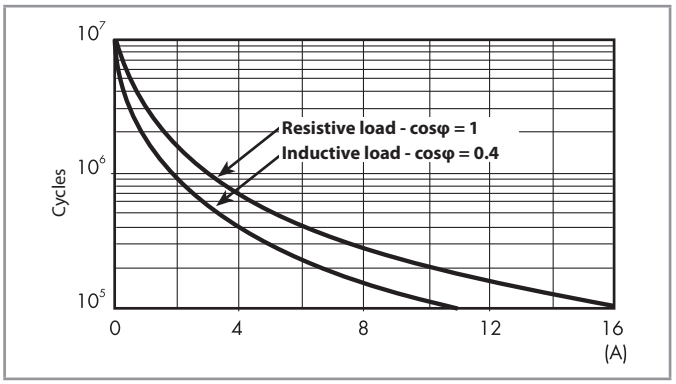

H 46 - Maximum DC1 breaking capacity

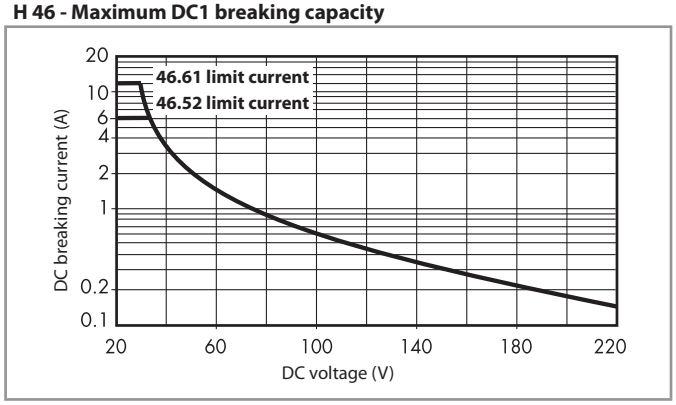

- When switching a resistive load (DC1) having voltage and current values under the curve, an electrical life of ≥ $100 \cdot 10^3$ can be expected.
- In the case of DC13 loads, the connection of a diode in parallel with the load will permit a similar electrical life as for a DC1 load.
  Note: the release time for the load will be increased.

XI-2016, www.findernet.com

Coil specifications

A

DC coil data

Nominal voltage	Coil code	Operating range		Resistance	Rated coil consumption
U_N		U_{min}	U_{max}	R	I at U_N
V		V	V	Ω	mA
12	**9**.012	8.8	13.2	300	40
24	**9**.024	17.5	26.4	1200	20
48	**9**.048	35	52.8	4800	10
110	**9**.110	80	121	23500	4.7
125	**9**.125	91.2	138	32000	3.9

AC coil data

Nominal voltage	Coil code	Operating range		Resistance	Rated coil consumption
U_N		U_{min}	U_{max}	R	I at U_N
V		V	V	Ω	mA
12	**8**.012	9.6	13.2	80	90
24	**8**.024	19.2	26.4	320	45
48	**8**.048	38.4	52.8	1350	21
110	**8**.110	88	121	6900	9.4
120	**8**.120	96	132	9000	8.4
230	**8**.230	184	253	28000	5
240	**8**.240	192	264	31500	4.1

R 46 - DC coil operating range v ambient temperature

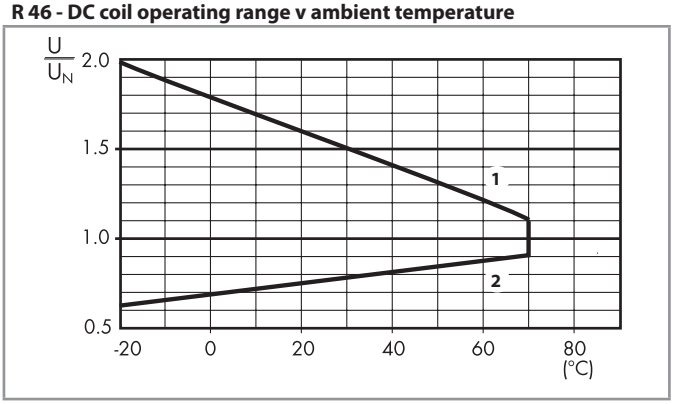

1 - Max. permitted coil voltage.
2 - Min. pick-up voltage with coil at ambient temperature.

R 46 - AC coil operating range v ambient temperature

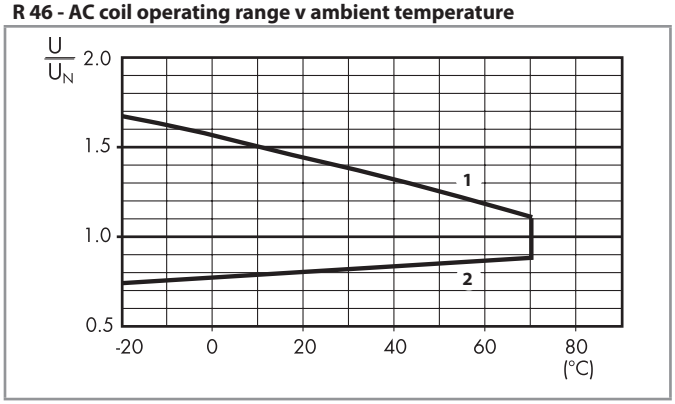

1 - Max. permitted coil voltage.
2 - Min. pick-up voltage with coil at ambient temperature.

XI-2016, www.findernet.com

Relay Module - PLC-RPT- 24DC/21 - 2900299

Please be informed that the data shown in this PDF Document is generated from our Online Catalog. Please find the complete data in the user's documentation. Our General Terms of Use for Downloads are valid (http://phoenixcontact.com/download)

PLC-INTERFACE, consisting of PLC-BPT.../21 basic terminal block with push-in technology and plug-in miniature relay with power contact, for mounting on NS 35/7,5 DIN rails, 1 PDT, input voltage: 24 V DC

Why buy this product

- Slim design
- Efficient connection to system cabling using V8 adapter
- RT III sealed relay
- Safe isolation according to DIN EN 50178 between coil and contact
- Integrated input circuit and interference suppression circuit
- Functional plug-in bridges

Key Commercial Data

Packing unit	1 STK
Weight per Piece (excluding packing)	31.27 g
Custom tariff number	85364100
Country of origin	Germany

Technical data

Note

Utilization restriction	EMC: class A product, see manufacturer's declaration in the download area

Dimensions

Width	6.2 mm
Height	80 mm
Depth	94 mm

Ambient conditions

Ambient temperature (operation)	-40 °C ... 60 °C
Ambient temperature (storage/transport)	-40 °C ... 85 °C

Relay Module - PLC-RPT- 24DC/21 - 2900299

Technical data

Coil side

Nominal input voltage U_N	24 V DC
Typical input current at U_N	9 mA
Typical response time	5 ms
Typical release time	8 ms
Protective circuit	Reverse polarity protection Polarity protection diode
	Free-wheeling diode Damping diode
Operating voltage display	yes
Power dissipation for nominal condition	0.22 W

Contact side

Contact type	1 PDT
Contact material	AgSnO
Maximum switching voltage	250 V AC/DC (The separating plate PLC-ATP should be installed for voltages larger than 250 V (L1, L2, L3) between identical terminal blocks in adjacent modules. Potential bridging is then carried out with FBST 8-PLC... or ...FBST 500...)
Minimum switching voltage	5 V (at 100 mA)
Min. switching current	10 mA (at 12 V)
Maximum inrush current	10 A (4 s)
Limiting continuous current	6 A
Interrupting rating (ohmic load) max.	140 W (at 24 V DC)
	20 W (at 48 V DC)
	18 W (at 60 V DC)
	23 W (at 110 V DC)
	40 W (at 220 V DC)
	1500 VA (for 250 V AC)
Switching capacity in acc. with DIN VDE 0660/IEC 60947	2 A (at 24 V, DC13)
	0.2 A (at 110 V, DC13)
	0.1 A (at 220 V, DC13)
	3 A (at 24 V, AC15)
	3 A (at 120 V, AC15)
	3 A (at 230 V, AC15)

Connection data input side

Connection name	Coil side
Connection method	Push-in connection
Stripping length	8 mm
Conductor cross section solid	0.14 mm² ... 2.5 mm²
Conductor cross section flexible	0.14 mm² ... 2.5 mm²
Conductor cross section AWG	26 ... 14

Connection data output side

Connection name	Contact side

Relay Module - PLC-RPT- 24DC/21 - 2900299

Technical data

Connection data output side

Connection method	Push-in connection
Stripping length	8 mm
Conductor cross section solid	0.14 mm² ... 2.5 mm²
Conductor cross section flexible	0.14 mm² ... 2.5 mm²
Conductor cross section AWG	26 ... 14

General

Test voltage relay winding/relay contact	4 kV AC (50 Hz, 1 min.)
Operating mode	100% operating factor
Degree of protection	RT III (Relay)
Mechanical service life	2 x 10^7 cycles
Flammability rating according to UL 94	V0
Designation	Standards/regulations
Standards/regulations	IEC 60664
	IEC 60664A
	DIN VDE 0110
	DIN EN 50178/DIN VDE 0160 (in relevant parts)
	DIN EN 50178/VDE 0160
	IEC 60255/DIN VDE 0435 (in relevant parts)
Degree of pollution	3
Overvoltage category	III
Mounting position	any
Assembly instructions	In rows with zero spacing

Standards and Regulations

Connection in acc. with standard	CUL
Designation	Standards/regulations
Standards/regulations	IEC 60664
	IEC 60664A
	DIN VDE 0110
	DIN EN 50178/DIN VDE 0160 (in relevant parts)
	DIN EN 50178/VDE 0160
	IEC 60255/DIN VDE 0435 (in relevant parts)
Degree of pollution	3
Overvoltage category	III
Flammability rating according to UL 94	V0

Relay Module - PLC-RPT- 24DC/21 - 2900299

Articles in set

Relay socket - PLC-BPT- 24DC/21 - 2900445

6.2 mm PLC basic terminal block with push-in connection, without relay or solid-state relay, for mounting on DIN rail NS 35/7,5, 1 PDT, input voltage 24 V DC

Single relay - REL-MR- 24DC/21 - 2961105

Plug-in miniature power relay, with power contact, 1 PDT, input voltage 24 V DC

Classifications

eCl@ss

eCl@ss 4.0	27371001
eCl@ss 4.1	27371001
eCl@ss 5.0	27371001
eCl@ss 5.1	27371001
eCl@ss 6.0	27371001
eCl@ss 7.0	27371001
eCl@ss 8.0	27371601
eCl@ss 9.0	27371601

ETIM

ETIM 3.0	EC000196
ETIM 4.0	EC000196
ETIM 5.0	EC001437

UNSPSC

UNSPSC 6.01	30211916
UNSPSC 7.0901	39121515
UNSPSC 11	39121515
UNSPSC 12.01	39121515
UNSPSC 13.2	39121515

Approvals

Approvals

Relay Module - PLC-RPT- 24DC/21 - 2900299

Approvals

Approvals

UL Recognized / UL Listed / cUL Recognized / cUL Listed / GL / EAC / RC FRT / EAC / cULus Recognized / cULus Listed

Ex Approvals

Approvals submitted

Approval details

UL Recognized

UL Listed

cUL Recognized

cUL Listed

GL

EAC

RC FRT

EAC

cULus Recognized

Relay Module - PLC-RPT- 24DC/21 - 2900299

Approvals

cULus Listed

Phoenix Contact 2016 © - all rights reserved
http://www.phoenixcontact.com

Relay Module - RIF-1-RPT-LDP-24DC/2X21/FG - 2908215

Please be informed that the data shown in this PDF Document is generated from our Online Catalog. Please find the complete data in the user's documentation. Our General Terms of Use for Downloads are valid (http://phoenixcontact.com/download)

Pre-assembled relay module with Push-in connection, consisting of: relay base, safety relay with force-guided contacts in accordance with DIN EN 50205, plug-in display/interference suppression module, and retaining bracket, contact type: 2 changeover contacts, input voltage: 24 V DC

Product Description

The force-guided coupling relay module is approved for industrial control equipment in accordance with UL 508 (cULus listed). The requirements for Type A in accordance with DIN EN 50205 are satisfied if the circuit is designed as 1 N/O contact / 1 N/C contact.

Key Commercial Data

Packing unit	1 STK
Weight per Piece (excluding packing)	71.520 g
Custom tariff number	85364110
Country of origin	Czech Republic

Technical data

Note

Utilization restriction	EMC: class A product, see manufacturer's declaration in the download area

Dimensions

Width	16 mm
Height	93 mm
Depth	70 mm

Ambient conditions

Ambient temperature (operation)	-20 °C ... 50 °C
Ambient temperature (storage/transport)	-20 °C ... 70 °C

Coil side

Nominal input voltage U_N	24 V DC
Input voltage range in reference to U_N	see diagram
Typical input current at U_N	30 mA
Typical response time	10 ms

Relay Module - RIF-1-RPT-LDP-24DC/2X21/FG - 2908215

Technical data

Coil side

Typical release time	10 ms
Coil voltage	24 V DC
Protective circuit	Damping diode
Operating voltage display	Yellow LED
Power dissipation for nominal condition	0.72 W

Contact side

Contact type	2 changeover contacts, forcibly actuated
Type of switch contact	Single contact
Contact material	AgNi
Maximum switching voltage	250 V AC/DC
Minimum switching voltage	15 V AC/DC
Min. switching current	10 mA
Maximum inrush current	6 A
Limiting continuous current	6 A
Interrupting rating (ohmic load) max.	144 W (at 24 V DC)
	288 W (at 48 V DC)
	88 W (at 110 V DC)
	110 W (at 220 V DC)
	1500 VA (for 250 V AC)
Switching capacity in acc. with DIN VDE 0660/IEC 60947	2 A (at 24 V, DC13)
	3 A (at 230 V, AC15)

Connection data input side

Connection name	Coil side
Connection method	Push-in connection
Stripping length	8 mm
Conductor cross section solid	0.14 mm² ... 1.5 mm²
Conductor cross section flexible	0.14 mm² ... 1.5 mm²
	0.14 mm² ... 1.5 mm² (Ferrule with plastic sleeve)
	0.14 mm² ... 1 mm² ()
Conductor cross section AWG	26 ... 16 (solid)
	26 ... 16 (stranded)

Connection data output side

Connection name	Contact side
Connection method	Push-in connection
Stripping length	8 mm
Conductor cross section solid	0.14 mm² ... 1.5 mm²
Conductor cross section flexible	0.14 mm² ... 1.5 mm²
	0.14 mm² ... 1.5 mm² (Ferrule with plastic sleeve)
	0.14 mm² ... 1 mm² ()

Relay Module - RIF-1-RPT-LDP-24DC/2X21/FG - 2908215

Technical data

Connection data output side

Conductor cross section AWG	26 ... 16 (solid)
	26 ... 16 (stranded)

General

Operating mode	100% operating factor
Degree of protection	IP20 (Relay base)
	RT II (Relay)
Mechanical service life	Approx. 10^7 cycles
UL, USA/Canada	cULus listed UL 508
UL certificate	NRNT.E172140
Mounting position	any
Assembly instructions	In rows with zero spacing
B_{10d}	600000 (AC1; 250 V / 6 A; 1 N/O)
	900000 (AC1; 250 V / 3 A; 1 N/O)
	1800000 (AC1; 250 V / 1,5 A; 1 N/O)
	180000 (AC15; 250 V / 3 A; 1 N/O)
	560000 (AC15; 250 V / 2 A; 1 N/O)
	4600000 (AC15; 250 V / 0,75 A; 1 N/O)
	360000 (DC13; 24 V / 3 A; 1 N/O)
	740000 (DC13; 24 V / 1,5 A; 1 N/O)
	4200000 (DC13; 24 V / 0,75 A; 1 N/O)

Standards and Regulations

Designation	Air clearances and creepage distances between the power circuits
Standards/regulations	DIN EN 50178/VDE 0160
	EN 50205
Rated insulation voltage	250 V
Rated surge voltage	6 kV
Insulation	safe isolation
Degree of pollution	2
Overvoltage category	III
Flammability rating according to UL 94	V2
Conformance	CE-compliant
UL, USA/Canada	cULus listed UL 508
Assembly instructions	In rows with zero spacing
Mounting position	any

Environmental Product Compliance

China RoHS	Environmentally Friendly Use Period = 50
	For details about hazardous substances go to tab “Downloads”, Category “Manufacturer's declaration”

Relay Module - RIF-1-RPT-LDP-24DC/2X21/FG - 2908215

Drawings

Circuit diagram

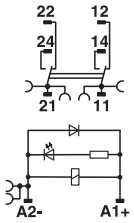

Diagram

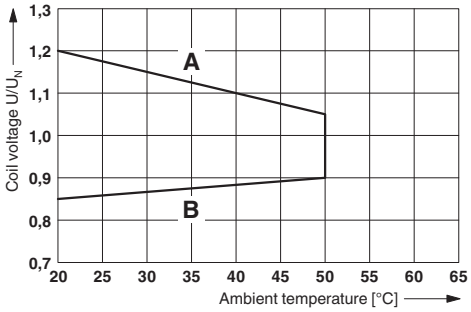

Operating voltage range

Diagram

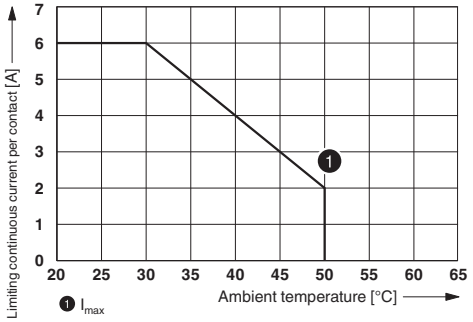

Contact derating

Articles in set

Safety relays - REL-SR- 24DC/2X21/FG - 2908777

Safety relay with forcibly guided contacts in acc. with DIN EN 50205, contact type 2 PDTs. The requirements for type A in accordance with EN 50205 are fulfilled when the wiring topology is 1 NO / 1 NC.

Plug-in module - RIF-LDP-12-24 DC - 2900939

Plug-in module, for mounting on RIF-1, RIF-2, RIF-3, and RIF-4, with freewheeling diode and yellow LED, polarity: A1+, A2-, input voltage: 12 ... 24 V DC ±20 %

Relay Module - RIF-1-RPT-LDP-24DC/2X21/FG - 2908215

Articles in set

Relay retaining bracket - RIF-RHM-1-H - 2905985

Relay retaining bracket, wire model, suitable for RIF-1 relay base, for 25 mm high octal miniature power relays

Approvals

Approvals

Approvals

UL Listed / cUL Listed / EAC / DNV GL / cULus Listed

Ex Approvals

Approval details

UL Listed	http://database.ul.com/cgi-bin/XYV/template/LISEXT/1FRAME/index.htm	FILE E 172140
cUL Listed	http://database.ul.com/cgi-bin/XYV/template/LISEXT/1FRAME/index.htm	FILE E 172140
EAC		RU C-DE.A*30.B.01082
DNV GL	http://exchange.dnv.com/tari/	TAA000018V
cULus Listed		

Phoenix Contact 2018 © - all rights reserved
http://www.phoenixcontact.com

Extract from the online catalog

NS 35/ 7,5 PERF 2000MM

Order No.: 0801733

http://eshop.phoenixcontact.ca/phoenix/treeViewClick.do?UID=0801733

DIN rail, material: steel galvanized and passivated with a thick layer, perforated, height 7.5 mm, width 35 mm, length: 2000 mm

Commercial data	
EAN	4 017918 006686
Pack	2 m
Customs tariff	72287010
Catalog page information	Page 341 (CL2-2011)

Product notes

WEEE/RoHS-compliant since: Jan/13/2006

Please note that the data given here has been taken from the online catalog. For comprehensive information and data, please refer to the user documentation at http://www.download.phoenixcontact.com. The General Terms and Conditions of Use apply to Internet downloads.

Technical data

General data

Height	7.5 mm
Length	2000 mm
Width	35 mm
Material	Steel
Coating	Galvanized, passivated with a thick layer
Color	silver
Test standard	In acc. with EN 60715: 2001

NS 35/ 7,5 PERF 2000MM Order No.: 0801733
http://eshop.phoenixcontact.ca/phoenix/treeViewClick.do?UID=0801733

Drawings

Dimensioned drawing

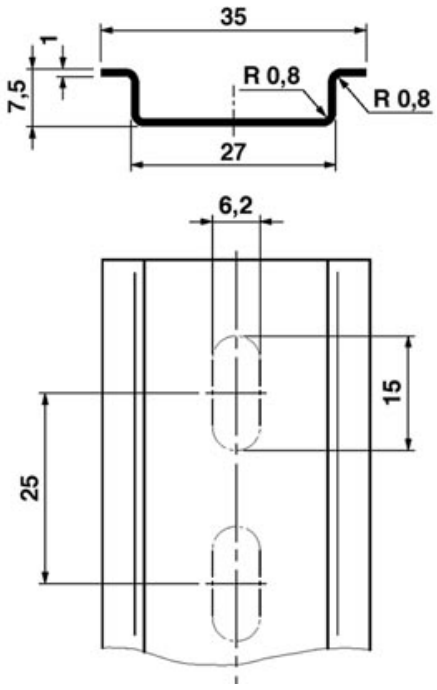

Zack marker strip - ZB 8:BLANK - 1052002

Please be informed that the data shown in this PDF Document is generated from our Online Catalog. Please find the complete data in the user's documentation. Our General Terms of Use for Downloads are valid (http://phoenixcontact.com/download)

The illustration shows versions ZB 8 - UNPRINTED, -LGS:CONSEC.NOS, -QR:CONSEC.NOS and CUS

Zack marker strip, Strip, white, unlabeled, can be labeled with: Plotter, Mounting type: Snap into tall marker groove, for terminal block width: 8.2 mm, Lettering field: 10.5 x 8.15 mm

Why buy this product

- Labeling service: Phoenix Contact can custom-label all zack marker strip markers according to your requirements
- The ZB zack marker strip system is a marking solution for modular terminal blocks and electronics modules with tall marker grooves

Key Commercial Data

Packing unit	10 pc
Minimum order quantity	10 pc
GTIN	4 017918 016302
Weight per Piece (excluding packing)	1.95 GRM
Custom tariff number	39209200
Country of origin	Germany

Technical data

Dimensions

Width (a)	8 mm

Ambient conditions

Ambient temperature (operation)	-40 °C ... 100 °C

General

Note	Can be labeled with CMS
Color	white
Components	free from silicone and halogen
Flammability rating according to UL 94	V2
Material	PA
Wipe resistance	DIN EN 61010-1 (VDE 0411-1)
Number of individual labels	10

Zack marker strip - ZB 8:BLANK - 1052002

Technical data

General

Number of individual labels per row	10
Number of marker strips	10
Marking mounting type	Snap into tall marker groove

Standards and Regulations

Wipe resistance	DIN EN 61010-1 (VDE 0411-1)
Flammability rating according to UL 94	V2

Classifications

eCl@ss

eCl@ss 4.0	24190208
eCl@ss 4.1	24190208
eCl@ss 5.0	27149103
eCl@ss 5.1	27141137
eCl@ss 6.0	27141137
eCl@ss 7.0	27141137
eCl@ss 8.0	27141137

ETIM

ETIM 2.0	EC000761
ETIM 3.0	EC000761
ETIM 4.0	EC000761
ETIM 5.0	EC000761

UNSPSC

UNSPSC 6.01	30211811
UNSPSC 7.0901	39121410
UNSPSC 11	39121410
UNSPSC 12.01	39121410
UNSPSC 13.2	39121410

Phoenix Contact 2016 © - all rights reserved
http://www.phoenixcontact.com

Zack marker strip - ZB 6:BLANK - 1051003

Please be informed that the data shown in this PDF Document is generated from our Online Catalog. Please find the complete data in the user's documentation. Our General Terms of Use for Downloads are valid (http://phoenixcontact.com/download)

The illustration shows the version ZB 6:UNBEDRUCKT

Zack marker strip, Strip, white, unlabeled, can be labeled with: Plotter, Mounting type: Snap into tall marker groove, for terminal block width: 6.2 mm, Lettering field: 6.15 x 10.5 mm

Why buy this product

- Labeling service: Phoenix Contact can custom-label all zack marker strip markers according to your requirements
- The ZB zack marker strip system is a marking solution for modular terminal blocks and electronics modules with tall marker grooves

Key Commercial Data

Packing unit	10 STK
Minimum order quantity	10 STK
GTIN	4 017918 015824
Weight per Piece (excluding packing)	1.51 g
Custom tariff number	39209200
Country of origin	Germany

Technical data

Dimensions

Width (a)	6 mm

Ambient conditions

Ambient temperature (operation)	-40 °C ... 100 °C

General

Note	Can be labeled with CMS
Color	white
Components	free from silicone and halogen
Flammability rating according to UL 94	V2
Material	PA
Wipe resistance	DIN EN 61010-1 (VDE 0411-1)
Number of individual labels	10
Number of individual labels per row	10
Number of marker strips	10

Zack marker strip - ZB 6:BLANK - 1051003

Technical data

General

Marking mounting type	Snap into tall marker groove

Standards and Regulations

Wipe resistance	DIN EN 61010-1 (VDE 0411-1)
Flammability rating according to UL 94	V2

Classifications

eCl@ss

eCl@ss 4.0	24190208
eCl@ss 4.1	24190208
eCl@ss 5.0	27149103
eCl@ss 5.1	27141137
eCl@ss 6.0	27141137
eCl@ss 7.0	27141137
eCl@ss 8.0	27141137
eCl@ss 9.0	27141137

ETIM

ETIM 2.0	EC000761
ETIM 3.0	EC000761
ETIM 4.0	EC000761
ETIM 5.0	EC000761

UNSPSC

UNSPSC 6.01	30211811
UNSPSC 7.0901	39121410
UNSPSC 11	39121410
UNSPSC 12.01	39121410
UNSPSC 13.2	39121410

Phoenix Contact 2016 © - all rights reserved
http://www.phoenixcontact.com

Zack Marker strip, flat - ZBF 5:BLANK - 0808642

Please be informed that the data shown in this PDF Document is generated from our Online Catalog. Please find the complete data in the user's documentation. Our General Terms of Use for Downloads are valid
(http://phoenixcontact.com/download)

The figure shows the versions ZBF 5- UNBEDRUCKT, -LGS:FORTL.ZAHLEN, -QR:FORTL.ZAHLEN, and -CUS

Zack Marker strip, flat, Strip, white, unlabeled, can be labeled with: Plotter, Mounting type: Snap into flat marker groove, for terminal block width: 5 mm, Lettering field: 5.1 x 5.2 mm

Why buy this product

- The ZBF zack marker strip system with flat marker groove is a marking solution for modular terminal blocks and electronics modules
- Other pitches available on request
- The multi-section marking strips are easy to fit and can be easily separated if required
- Labeling service: Phoenix Contact can custom-label all zack marker strip markers according to your requirements
- Unlabeled marking strips can be custom-labeled with a plotter or by hand

Key commercial data

Packing unit	10 pc
Minimum order quantity	10 pc
GTIN	4 017918 180355
Weight per Piece (excluding packing)	0.5 GRM
Custom tariff number	85369010
Country of origin	Germany

Technical data

Dimensions

Width (a)	5 mm

Ambient conditions

Ambient temperature (operation)	-40 °C ... 100 °C

General

Color	white
Components	free from silicone and halogen
Inflammability class according to UL 94	V2
Material	PA

Zack Marker strip, flat - ZBF 5:BLANK - 0808642

Technical data

General

Wipe resistance	DIN EN 61010-1 (VDE 0411-1)
Number of individual labels	10
Number of individual labels per row	10
Number of marker strips	10
Marking mounting type	Snap into flat marker groove

Classifications

eCl@ss

eCl@ss 4.0	24190208
eCl@ss 4.1	24190208
eCl@ss 5.0	27149103
eCl@ss 5.1	27141137
eCl@ss 6.0	27141137
eCl@ss 7.0	27141137
eCl@ss 8.0	27141137

ETIM

ETIM 2.0	EC000761
ETIM 3.0	EC000761
ETIM 4.0	EC000761
ETIM 5.0	EC000761

UNSPSC

UNSPSC 6.01	30211811
UNSPSC 7.0901	39121410
UNSPSC 11	39121410
UNSPSC 12.01	39121410
UNSPSC 13.2	39121410

Phoenix Contact 2014 © - all rights reserved
http://www.phoenixcontact.com

Plug-in bridge - FBS 3-6 - 3030242

Please be informed that the data shown in this PDF Document is generated from our Online Catalog. Please find the complete data in the user's documentation. Our General Terms of Use for Downloads are valid (http://phoenixcontact.com/download)

Plug-in bridge, Pitch: 6.2 mm, Length: 23 mm, Width: 16.9 mm, Number of positions: 3, Color: red

Why buy this product

- The 2- to 50-pos. jumpers can bridge up to 50 terminal blocks in the two bridge shafts of the CLIPLINE complete system in one step

RoHS

Key Commercial Data

Packing unit	50 STK
Minimum order quantity	50 STK
GTIN	4 017918 188566
GTIN	4017918188566
Weight per Piece (excluding packing)	2.930 g
Custom tariff number	85389080
Country of origin	Germany

Technical data

Technical data

Color	red
Material	Copper
Number of positions	3
Pitch	6.2 mm
Maximum load current	32 A (The current values for the jumpers can deviate when used in different modular terminal blocks. The precise values can be found in the accessories data for the respective modular terminal blocks.)

Environmental Product Compliance

China RoHS	Environmentally friendly use period: unlimited = EFUP-e
	No hazardous substances above threshold values

Plug-in bridge - FBS 3-6 - 3030242

Approvals

Approvals

Approvals

EAC

Ex Approvals

Approval details

EAC	EAC-Zulassung

Phoenix Contact 2016 © - all rights reserved
http://www.phoenixcontact.com

Potential bridge - FBS-PV - 3032185

Please be informed that the data shown in this PDF Document is generated from our Online Catalog. Please find the complete data in the user's documentation. Our General Terms of Use for Downloads are valid (http://phoenixcontact.com/download)

Vertical potential bridge, to connect the upper and lower level

Key commercial data

Packing unit	50 pc
Minimum order quantity	50 pc
GTIN	4 046356 052566
Weight per Piece (excluding packing)	0.9 GRM
Custom tariff number	85389099
Country of origin	Germany

Technical data

Technical data

Color	black
Material	PA 6.6
Number of positions	1
Maximum load current	32 A (The current values for the jumpers can deviate when used in different modular terminal blocks. The precise values can be found in the accessories data for the respective modular terminal blocks.)
Inflammability class according to UL 94	V0
Maximum temperature	125 °C

Classifications

eCl@ss

eCl@ss 4.0	27141199
eCl@ss 4.1	27141199
eCl@ss 5.0	27141140
eCl@ss 5.1	27141140
eCl@ss 6.0	27141140
eCl@ss 7.0	27141140
eCl@ss 8.0	27141140

Potential bridge - FBS-PV - 3032185

Classifications

ETIM

ETIM 2.0	EC000489
ETIM 3.0	EC000489
ETIM 4.0	EC000489
ETIM 5.0	EC000489

UNSPSC

UNSPSC 6.01	30211829
UNSPSC 7.0901	39121426
UNSPSC 11	39121426
UNSPSC 12.01	39121426
UNSPSC 13.2	39121426

Phoenix Contact 2014 © - all rights reserved
http://www.phoenixcontact.com

Plug-in bridge - FBS 50-5 - 3038930

Please be informed that the data shown in this PDF Document is generated from our Online Catalog. Please find the complete data in the user's documentation. Our General Terms of Use for Downloads are valid (http://phoenixcontact.com/download)

Plug-in bridge, Pitch: 5.2 mm, Number of positions: 50, Color: red

Why buy this product

- The 2- to 50-pos. jumpers can bridge up to 50 terminal blocks in the two bridge shafts of the CLIPLINE complete system in one step

Key Commercial Data

Packing unit	10 STK
Minimum order quantity	10 STK
GTIN	4 017918 940614
Weight per Piece (excluding packing)	46.74 g
Custom tariff number	85389080
Country of origin	Germany

Technical data

Technical data

Color	red
Material	Copper
Number of positions	50
Pitch	5.20 mm
Maximum load current	24 A (The current values for the jumpers can deviate when used in different modular terminal blocks. The precise values can be found in the accessories data for the respective modular terminal blocks.)

Classifications

eCl@ss

eCl@ss 4.0	27141199
eCl@ss 4.1	27141199
eCl@ss 5.0	27141140
eCl@ss 5.1	27141140
eCl@ss 6.0	27141140

Plug-in bridge - FBS 50-5 - 3038930

Classifications

eCl@ss

eCl@ss 7.0	27141140
eCl@ss 8.0	27141140
eCl@ss 9.0	27141140

ETIM

ETIM 2.0	EC000489
ETIM 3.0	EC000489
ETIM 4.0	EC000489
ETIM 5.0	EC000489

UNSPSC

UNSPSC 6.01	30211829
UNSPSC 7.0901	39121426
UNSPSC 11	39121426
UNSPSC 12.01	39121426
UNSPSC 13.2	39121426

Approvals

Approvals

Approvals

EAC

Ex Approvals

Approvals submitted

Approval details

EAC

Phoenix Contact 2016 © - all rights reserved
http://www.phoenixcontact.com

FBS 2-5

Order No.: 3030161

http://catalog.phoenixcontact.net/phoenix/treeViewClick.do?UID=3030161

Plug-in bridge, Number of positions: 2, Color: red

Commercial data	
EAN	4 017918 188511
sales group	A690
Pack	50 Pcs.
Customs tariff	85389099
Gross weight in pieces	0.001696 KG
Net weight per piece	0.001684 KG
Catalog page information	Page 390 (CL1-2011)

Product notes

WEEE/RoHS-compliant since: 01/01/2003

http://www.download.phoenixcontact.com
Please note that the data given here has been taken from the online catalog. For comprehensive information and data, please refer to the user documentation. The General Terms and Conditions of Use apply to Internet downloads.

Certificates / Approvals

Certification

Certifications applied for:

Certification Ex:

FBS 3-5

Order No.: 3030174

http://catalog.phoenixcontact.net/phoenix/treeViewClick.do?UID=3030174

Plug-in bridge, Number of positions: 3, Color: red

Commercial data	
EAN	4 017918 188528
sales group	A690
Pack	50 Pcs.
Customs tariff	85389099
Gross weight in pieces	0.002524 KG
Net weight per piece	0.002524 KG
Catalog page information	Page 472 (CAT-3-2013)

Product notes

WEEE/RoHS-compliant since: 01/01/2003

http://www.download.phoenixcontact.com
Please note that the data given here has been taken from the online catalog. For comprehensive information and data, please refer to the user documentation. The General Terms and Conditions of Use apply to Internet downloads.

Certificates / Approvals

Certification

Certifications applied for:

Certification Ex:

Address

PHOENIX CONTACT GmbH & Co. KG
Flachsmarktstr. 8
32825 Blomberg,Germany
Phone +49 5235 3 00
Fax +49 5235 3 41200
http://www.phoenixcontact.com

© 2013 Phoenix Contact
Technical modifications reserved;

D-PT 6

Order No.: 3212044

http://catalog.phoenixcontact.net/phoenix/treeViewClick.do?UID=3212044

End cover, Length: 57.7 mm, Width: 2.2 mm, Height: 42 mm,
Color: gray

Commercial data	
EAN	4 046356 494786
sales group	A692
Pack	50 Pcs.
Customs tariff	85389099
Gross weight in pieces	0.0031 KG
Net weight per piece	0.0031 KG

Product notes

WEEE/RoHS-compliant since:
02/17/2009

http://
www.download.phoenixcontact.com
Please note that the data given here has been taken from the online catalog. For comprehensive information and data, please refer to the user documentation. The General Terms and Conditions of Use apply to Internet downloads.

Certificates / Approvals

Certification GOST

Certifications applied for:

Certification Ex:

Address

PHOENIX CONTACT GmbH & Co. KG
Flachsmarktstr. 8
32825 Blomberg,Germany
Phone +49 5235 3 00
Fax +49 5235 3 41200
http://www.phoenixcontact.com

© 2012 Phoenix Contact
Technical modifications reserved;

End cover - D-PT 4-QUATTRO - 3208979

Please be informed that the data shown in this PDF Document is generated from our Online Catalog. Please find the complete data in the user's documentation. Our General Terms of Use for Downloads are valid (http://phoenixcontact.com/download)

End cover, Length: 77 mm, Width: 2.2 mm, Color: gray

Why buy this product

- End cover, enables the open terminal side to be covered

Key commercial data

Packing unit	50 pc
Minimum order quantity	50 pc
Weight per Piece (excluding packing)	3.16 GRM
Custom tariff number	85389099
Country of origin	Poland

Technical data

General

Color	gray
Insulating material	PA
Inflammability class according to UL 94	V0

Dimensions

Width	2.2 mm
Length	77 mm

General

Temperature index, insulating material (DIN EN 60216-1 (VDE 0304-21))	130 °C
Static insulating material application in cold	-60 °C

Classifications

eCl@ss

eCl@ss 4.0	27141111
eCl@ss 4.1	27141111
eCl@ss 5.0	27141133
eCl@ss 5.1	27141133

End cover - D-PT 4-QUATTRO - 3208979

Classifications

eCl@ss

eCl@ss 6.0	27141133
eCl@ss 7.0	27141133
eCl@ss 8.0	27141133

ETIM

ETIM 2.0	EC000886
ETIM 3.0	EC000886
ETIM 4.0	EC000886
ETIM 5.0	EC000886

UNSPSC

UNSPSC 6.01	30211827
UNSPSC 7.0901	39121424
UNSPSC 11	39121424
UNSPSC 12.01	39121424
UNSPSC 13.2	39121424

Phoenix Contact 2014 © - all rights reserved
http://www.phoenixcontact.com

D-PTTB 2,5

Order No.: 3211634

http://catalog.phoenixcontact.net/phoenix/treeViewClick.do?UID=3211634

End cover, Length: 68 mm, Width: 2.2 mm, Color: gray

Commercial data	
EAN	4 046356 428378
sales group	A692
Pack	50 Pcs.
Customs tariff	85389099
Gross weight in pieces	0.00326 KG
Net weight per piece	0.00326 KG
Catalog page information	Page 99 (CL1-2011)

Product notes

WEEE/RoHS-compliant since: 06/23/2008

http://www.download.phoenixcontact.com
Please note that the data given here has been taken from the online catalog. For comprehensive information and data, please refer to the user documentation. The General Terms and Conditions of Use apply to Internet downloads.

Certificates / Approvals

Certification GOST

Certifications applied for:

Certification Ex:

PIT 6-PE

Order No.: 3211822

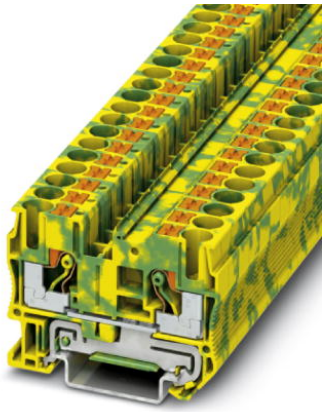

http://eshop.phoenixcontact.co.uk/phoenix/treeViewClick.do?UID=3211822

Ground modular terminal block, Connection method: Push-In connection, Cross section: 0.5 mm² - 10 mm², AWG 20 - 8, Width: 8.2 mm, Height: 42 mm, Color: green-yellow, Mounting type: NS 35/7.5, NS 35/15

Commercial data	
EAN	4 046356 494779
Pack	50
Customs tariff	85369010
Country of Origin	DE

Product notes

WEEE/RoHS-compliant since: 17/02/2009

Please note that the data given here has been taken from the online catalog. For comprehensive information and data, please refer to the user documentation at http://www.download.phoenixcontact.com. The General Terms and Conditions of Use apply to Internet downloads.

Technical data

General

Number of levels	1
Number of connections	2
Color	green-yellow
Insulating material	PA

Inflammability class according to UL 94	V0

Dimensions

Width	8.2 mm
Length	57.7 mm
Height	42 mm
Height NS 35/7.5	43.5 mm
Height NS 35/15	51 mm

Technical data

Rated surge voltage	8 kV
Pollution degree	3
Surge voltage category	III
Insulating material group	I
Connection in acc. with standard	IEC 60947-7-2
Open side panel	ja

Connection data

Conductor cross section solid min.	0.5 mm²
Conductor cross section solid max.	10 mm²
Conductor cross section stranded min.	0.5 mm²
Conductor cross section stranded max.	6 mm²
Conductor cross section AWG/kcmil min.	20
Conductor cross section AWG/kcmil max	8
Conductor cross section stranded, with ferrule without plastic sleeve min.	0.5 mm²
Conductor cross section stranded, with ferrule without plastic sleeve max.	6 mm²
Conductor cross section stranded, with ferrule with plastic sleeve min.	0.5 mm²
Conductor cross section stranded, with ferrule with plastic sleeve max.	6 mm²
2 conductors with same cross section, stranded, TWIN ferrules with plastic sleeve, min.	0.5 mm²
2 conductors with same cross section, stranded, TWIN ferrules with plastic sleeve, max.	1.5 mm²
Connection method	Push-In connection
Stripping length	12 mm
Internal cylindrical gage	A5

Certificates

Certification	CUL, UL

Address

PHOENIX CONTACT Ltd
Halesfield 13
Telford / Shropshire / TF7 4PG,England
Phone 01952 681 700
Fax 01952 681 799
http://www.phoenixcontact.co.uk

Phoenix Contact Ltd.
Technical modifications reserved;

Ground modular terminal block - PT 4-QUATTRO-PE - 3211809

Please be informed that the data shown in this PDF Document is generated from our Online Catalog. Please find the complete data in the user's documentation. Our General Terms of Use for Downloads are valid (http://phoenixcontact.com/download)

Ground modular terminal block, Connection method: Push-in connection, Cross section: 0.2 mm² - 6 mm², AWG: 24 - 10, Width: 6.2 mm, Height: 35.3 mm, Color: green-yellow, Mounting type: NS 35/7,5, NS 35/15

Why buy this product

- The Push-in connection terminal blocks are characterized by the system features of the CLIPLINE complete system and by easy and tool-free wiring of conductors with ferrules or solid conductors
- The compact design and front connection enable wiring in a confined space
- In addition to the testing facility in the double function shaft, all terminal blocks provide an additional test connection
- Tested for railway applications

Key Commercial Data

Packing unit	50 pc
Minimum order quantity	50 pc
Weight per Piece (excluding packing)	17.18 GRM
Custom tariff number	85369040
Country of origin	Poland

Technical data

General

Number of levels	1
Number of connections	4
Nominal cross section	4 mm²
Color	green-yellow
Insulating material	PA
Flammability rating according to UL 94	V0
Area of application	Railway industry
	Mechanical engineering
	Plant engineering
	Process industry
Rated surge voltage	8 kV

Ground modular terminal block - PT 4-QUATTRO-PE - 3211809

Technical data

General

Degree of pollution	3
Overvoltage category	III
Insulating material group	I
Connection in acc. with standard	IEC 60947-7-2
Open side panel	Yes
Shock protection test specification	DIN EN 50274 (VDE 0660-514):2002-11
Back of the hand protection	guaranteed
Finger protection	guaranteed
Oscillation, broadband noise test result	Test passed
Test specification, oscillation, broadband noise	DIN EN 50155 (VDE 0115-200):2008-03
Test spectrum	Service life test category 2, bogie mounted
Test frequency	f_1 = 5 Hz to f_2 = 250 Hz
ASD level	6.12 $(m/s^2)^2/Hz$
Acceleration	3.12 g
Test duration per axis	5 h
Test directions	X-, Y- and Z-axis
Shock test result	Test passed
Test specification, shock test	DIN EN 50155 (VDE 0115-200):2008-03
Shock form	Half-sine
Acceleration	30g
Shock duration	18 ms
Number of shocks per direction	3
Test directions	X-, Y- and Z-axis (pos. and neg.)
Relative insulation material temperature index (Elec., UL 746 B)	130 °C
Temperature index of insulation material (DIN EN 60216-1 (VDE 0304-21))	130 °C
Static insulating material application in cold	-60 °C

Dimensions

Width	6.2 mm
End cover width	2.2 mm
Length	77 mm
Height	35.3 mm
Height NS 35/7,5	36.5 mm
Height NS 35/15	44 mm

Connection data

Note	Please observe the current carrying capacity of the DIN rails.
Connection method	Push-in connection
Connection in acc. with standard	IEC 60947-7-2
Conductor cross section solid min.	0.2 mm²
Conductor cross section solid max.	6 mm²

Ground modular terminal block - PT 4-QUATTRO-PE - 3211809

Technical data

Connection data

Conductor cross section AWG min.	24
Conductor cross section AWG max.	10
Conductor cross section flexible min.	0.2 mm²
Conductor cross section flexible max.	4 mm²
Min. AWG conductor cross section, flexible	24
Max. AWG conductor cross section, flexible	12
Conductor cross section flexible, with ferrule without plastic sleeve min.	0.25 mm²
Conductor cross section flexible, with ferrule without plastic sleeve max.	4 mm²
Conductor cross section flexible, with ferrule with plastic sleeve min.	0.25 mm²
Conductor cross section flexible, with ferrule with plastic sleeve max.	4 mm²
2 conductors with same cross section, stranded, TWIN ferrules with plastic sleeve, min.	0.5 mm²
2 conductors with same cross section, stranded, TWIN ferrules with plastic sleeve, max.	1 mm²
Stripping length	10 mm ... 12 mm
Internal cylindrical gage	A4

Standards and Regulations

Connection in acc. with standard	CSA
	IEC 60947-7-2
Flammability rating according to UL 94	V0

Classifications

eCl@ss

eCl@ss 4.0	27141118
eCl@ss 4.1	27141118
eCl@ss 5.0	27141118
eCl@ss 5.1	27141118
eCl@ss 6.0	27141141
eCl@ss 7.0	27141141
eCl@ss 8.0	27141141
eCl@ss 9.0	27141141

ETIM

ETIM 2.0	EC000901
ETIM 3.0	EC000901
ETIM 4.0	EC000901
ETIM 5.0	EC000901

UNSPSC

UNSPSC 6.01	30211811

Ground modular terminal block - PT 4-QUATTRO-PE - 3211809

Classifications

UNSPSC

UNSPSC 7.0901	39121410
UNSPSC 11	39121410
UNSPSC 12.01	39121410
UNSPSC 13.2	39121410

Approvals

Approvals

Approvals

UL Recognized / cUL Recognized / CSA / LR / VDE Zeichengenehmigung / IECEE CB Scheme / EAC / BV / EAC / GL / NK / cULus Recognized

Ex Approvals

ATEX / IECEx / EAC Ex

Approvals submitted

Approval details

UL Recognized

	B	C	D
mm²/AWG/kcmil	24-10	24-10	24-10

cUL Recognized

	B	C	D
mm²/AWG/kcmil	24-10	24-10	24-10

CSA

mm²/AWG/kcmil	24-10

LR

Ground modular terminal block - PT 4-QUATTRO-PE - 3211809

Approvals

VDE Zeichengenehmigung

mm²/AWG/kcmil	0.2-4

IECEE CB Scheme

mm²/AWG/kcmil	0.2-4

EAC

BV

EAC

GL

NK

cULus Recognized

Phoenix Contact 2016 © - all rights reserved
http://www.phoenixcontact.com

Protective conductor double-level terminal block - PTTB 2,5-PE - 3210596

Please be informed that the data shown in this PDF Document is generated from our Online Catalog. Please find the complete data in the user's documentation. Our General Terms of Use for Downloads are valid (http://phoenixcontact.com/download)

Protective conductor double-level terminal block, Cross section: 0.14 mm² - 4 mm², AWG: 26 - 12, Connection type: Push-in connection, Width: 5.2 mm, Color: green-yellow, Mounting type: NS 35/7,5, NS 35/15

Why buy this product

- The Push-in connection terminal blocks are characterized by the system features of the CLIPLINE complete system and by easy and tool-free wiring of conductors with ferrules or solid conductors
- The compact design and front connection enable wiring in a confined space
- In addition to the testing facility in the double function shaft, all terminal blocks provide an additional test connection
- Tested for railway applications

Key Commercial Data

Packing unit	50 STK
Minimum order quantity	50 STK
Weight per Piece (excluding packing)	16.93 g
Custom tariff number	85369040
Country of origin	Poland

Technical data

General

Number of levels	2
Number of connections	4
Nominal cross section	2.5 mm²
Color	green-yellow
Insulating material	PA
Flammability rating according to UL 94	V0
Area of application	Railway industry
	Machine building
	Plant engineering

Protective conductor double-level terminal block - PTTB 2,5-PE - 3210596

Technical data

General

	Process industry
Rated surge voltage	6 kV
Degree of pollution	3
Overvoltage category	III
Insulating material group	I
Connection in acc. with standard	IEC 60947-7-2
Open side panel	Yes
Shock protection test specification	DIN EN 50274 (VDE 0660-514):2002-11
Back of the hand protection	guaranteed
Finger protection	guaranteed
Oscillation, broadband noise test result	Test passed
Test specification, oscillation, broadband noise	DIN EN 50155 (VDE 0115-200):2008-03
Test spectrum	Service life test category 2, bogie mounted
Test frequency	f_1 = 5 Hz to f_2 = 250 Hz
ASD level	6.12 $(m/s^2)^2/Hz$
Acceleration	3.12 g
Test duration per axis	5 h
Test directions	X-, Y- and Z-axis
Shock test result	Test passed
Test specification, shock test	DIN EN 50155 (VDE 0115-200):2008-03
Shock form	Half-sine
Acceleration	30g
Shock duration	18 ms
Number of shocks per direction	3
Test directions	X-, Y- and Z-axis (pos. and neg.)
Relative insulation material temperature index (Elec.; UL 746 B)	130 °C
Temperature index of insulation material (DIN EN 60216-1 (VDE 0304-21))	130 °C
Static insulating material application in cold	-60 °C

Dimensions

Width	5.2 mm
Length	68 mm
Height NS 35/7,5	47.5 mm
Height NS 35/15	55 mm

Connection data

Note	Please observe the current carrying capacity of the DIN rails.
Connection method	Push-in connection
Conductor cross section solid min.	0.14 mm²
Conductor cross section solid max.	4 mm²

Protective conductor double-level terminal block - PTTB 2,5-PE - 3210596

Technical data

Connection data

Conductor cross section flexible min.	0.14 mm²
Conductor cross section flexible max.	2.5 mm²
Conductor cross section AWG min.	26
Conductor cross section AWG max.	12
Conductor cross section flexible, with ferrule without plastic sleeve min.	0.14 mm²
Conductor cross section flexible, with ferrule without plastic sleeve max.	2.5 mm²
Conductor cross section flexible, with ferrule with plastic sleeve min.	0.14 mm²
Conductor cross section flexible, with ferrule with plastic sleeve max.	2.5 mm²
2 conductors with same cross section, stranded, TWIN ferrules with plastic sleeve, max.	0.5 mm²
Stripping length	8 mm ... 10 mm
Internal cylindrical gage	A4
Stripping length	8 mm ... 10 mm

Standards and Regulations

Connection in acc. with standard	CSA
	IEC 60947-7-2
Flammability rating according to UL 94	V0

Classifications

eCl@ss

eCl@ss 4.0	27141118
eCl@ss 4.1	27141118
eCl@ss 5.0	27141118
eCl@ss 5.1	27141118
eCl@ss 6.0	27141141
eCl@ss 7.0	27141141
eCl@ss 8.0	27141141
eCl@ss 9.0	27141141

ETIM

ETIM 2.0	EC000901
ETIM 3.0	EC000901
ETIM 4.0	EC000901
ETIM 5.0	EC000901

UNSPSC

UNSPSC 6.01	30211811
UNSPSC 7.0901	39121410
UNSPSC 11	39121410

Protective conductor double-level terminal block - PTTB 2,5-PE - 3210596

Classifications

UNSPSC

UNSPSC 12.01	39121410
UNSPSC 13.2	39121410

Approvals

Approvals

Approvals

CSA / UL Recognized / cUL Recognized / RS / ABS / NK / BV / VDE Zeichengenehmigung / IECEE CB Scheme / EAC / NK / EAC / DNV GL / cULus Recognized

Ex Approvals

ATEX / IECEx / EAC Ex

Approvals submitted

Approval details

CSA

mm²/AWG/kcmil	26-12

UL Recognized

	B	C
mm²/AWG/kcmil	26-12	26-12

cUL Recognized

	B	C
mm²/AWG/kcmil	26-12	26-12

RS

Protective conductor double-level terminal block - PTTB 2,5-PE - 3210596

Approvals

ABS

NK

BV

VDE Zeichengenehmigung

mm²/AWG/kcmil	0.2-2.5

IECEE CB Scheme

mm²/AWG/kcmil	2.5

EAC

NK

EAC

DNV GL

cULus Recognized

Phoenix Contact 2016 © - all rights reserved
http://www.phoenixcontact.com

Feed-through terminal block - PT 4-QUATTRO - 3211797

Please be informed that the data shown in this PDF Document is generated from our Online Catalog. Please find the complete data in the user's documentation. Our General Terms of Use for Downloads are valid (http://phoenixcontact.com/download)

Feed-through terminal block, Connection method: Push-in connection, Cross section: 0.2 mm² - 6 mm², AWG: 24 - 10, Width: 6.2 mm, Height: 35.3 mm, Color: gray, Mounting type: NS 35/7,5, NS 35/15

Why buy this product

- The Push-in connection terminal blocks are characterized by the system features of the CLIPLINE complete system and by easy and tool-free wiring of conductors with ferrules or solid conductors
- The compact design and front connection enable wiring in a confined space
- In addition to the testing facility in the double function shaft, all terminal blocks provide an additional test connection
- Tested for railway applications

Key Commercial Data

Packing unit	50 STK
Minimum order quantity	50 STK
Weight per Piece (excluding packing)	14.150 g
Custom tariff number	85369040
Country of origin	Poland

Technical data

General

Number of levels	1
Number of connections	4
Potentials	1
Nominal cross section	4 mm²
Color	gray
Insulating material	PA
Flammability rating according to UL 94	V0
Area of application	Railway industry
	Machine building
	Plant engineering
	Process industry

Feed-through terminal block - PT 4-QUATTRO - 3211797

Technical data

General

Rated surge voltage	8 kV
Degree of pollution	3
Overvoltage category	III
Insulating material group	I
Maximum load current	38 A (In the case of a 6 mm² conductor cross section, the maximum load current must not be exceeded by the total current of all connected conductors)
Nominal current I_N	32 A
Nominal voltage U_N	800 V
Open side panel	Yes
Shock protection test specification	DIN EN 50274 (VDE 0660-514):2002-11
Back of the hand protection	guaranteed
Finger protection	guaranteed
Result of surge voltage test	Test passed
Surge voltage test setpoint	9.8 kV
Result of power-frequency withstand voltage test	Test passed
Power frequency withstand voltage setpoint	2 kV
Result of the test for mechanical stability of terminal points (5 x conductor connection)	Test passed
Result of bending test	Test passed
Bending test rotation speed	10 rpm
Bending test turns	135
Bending test conductor cross section/weight	0.2 mm² / 0.2 kg
	4 mm² / 0.9 kg
	6 mm^2 / 1.4 kg
Tensile test result	Test passed
Conductor cross section tensile test	0.2 mm²
Tractive force setpoint	10 N
Conductor cross section tensile test	4 mm²
Tractive force setpoint	60 N
Conductor cross section tensile test	6 mm²
Tractive force setpoint	80 N
Result of tight fit on support	Test passed
Tight fit on carrier	NS 35
Setpoint	1 N
Result of voltage-drop test	Test passed
Requirements, voltage drop	≤ 3.2 mV
Result of temperature-rise test	Test passed
Short circuit stability result	Test passed
Conductor cross section short circuit testing	4 mm²
Short-time current	0.48 kA

Feed-through terminal block - PT 4-QUATTRO - 3211797

Technical data

General

Conductor cross section short circuit testing	6 mm²
Short-time current	0.72 kA
Result of aging test	Test passed
Ageing test for screwless modular terminal block temperature cycles	192
Result of thermal test	Test passed
Proof of thermal characteristics (needle flame) effective duration	30 s
Oscillation, broadband noise test result	Test passed
Test specification, oscillation, broadband noise	DIN EN 50155 (VDE 0115-200):2008-03
Test spectrum	Service life test category 2, bogie mounted
Test frequency	f_1 = 5 Hz to f_2 = 250 Hz
ASD level	6.12 $(m/s^2)^2$/Hz
Acceleration	3.12 g
Test duration per axis	5 h
Test directions	X-, Y- and Z-axis
Shock test result	Test passed
Test specification, shock test	DIN EN 50155 (VDE 0115-200):2008-03
Shock form	Half-sine
Acceleration	30g
Shock duration	18 ms
Number of shocks per direction	3
Test directions	X-, Y- and Z-axis (pos. and neg.)
Relative insulation material temperature index (Elec., UL 746 B)	130 °C
Temperature index of insulation material (DIN EN 60216-1 (VDE 0304-21))	130 °C
Static insulating material application in cold	-60 °C
Behavior in fire for rail vehicles (DIN 5510-2)	Test passed
Flame test method (DIN EN 60695-11-10)	V0
Oxygen index (DIN EN ISO 4589-2)	>32 %
NF F16-101, NF F10-102 Class I	2
NF F16-101, NF F10-102 Class F	2
Surface flammability NFPA 130 (ASTM E 162)	passed
Specific optical density of smoke NFPA 130 (ASTM E 662)	passed
Smoke gas toxicity NFPA 130 (SMP 800C)	passed
Calorimetric heat release NFPA 130 (ASTM E 1354)	28 MJ/kg
Fire protection for rail vehicles (DIN EN 45545-2) R22	HL 1 - HL 3
Fire protection for rail vehicles (DIN EN 45545-2) R23	HL 1 - HL 3
Fire protection for rail vehicles (DIN EN 45545-2) R24	HL 1 - HL 3
Fire protection for rail vehicles (DIN EN 45545-2) R26	HL 1 - HL 3

Dimensions

Width	6.2 mm

Feed-through terminal block - PT 4-QUATTRO - 3211797

Technical data

Dimensions

End cover width	2.2 mm
Length	77 mm
Height	35.3 mm
Height NS 35/7,5	36.5 mm
Height NS 35/15	44 mm

Connection data

Connection method	Push-in connection
Connection in acc. with standard	IEC 60947-7-1
Conductor cross section solid min.	0.2 mm²
Conductor cross section solid max.	6 mm²
Conductor cross section AWG min.	24
Conductor cross section AWG max.	10
Conductor cross section flexible min.	0.2 mm²
Conductor cross section flexible max.	4 mm²
Min. AWG conductor cross section, flexible	24
Max. AWG conductor cross section, flexible	12
Conductor cross section flexible, with ferrule without plastic sleeve min.	0.25 mm²
Conductor cross section flexible, with ferrule without plastic sleeve max.	4 mm²
Conductor cross section flexible, with ferrule with plastic sleeve min.	0.25 mm²
Conductor cross section flexible, with ferrule with plastic sleeve max.	4 mm²
2 conductors with same cross section, stranded, TWIN ferrules with plastic sleeve, min.	0.5 mm²
2 conductors with same cross section, stranded, TWIN ferrules with plastic sleeve, max.	1 mm²
Stripping length	10 mm ... 12 mm
Internal cylindrical gage	A4

Standards and Regulations

Connection in acc. with standard	CSA
	IEC 60947-7-1
Flammability rating according to UL 94	V0

Environmental Product Compliance

China RoHS	Environmentally friendly use period: unlimited = EFUP-e
	No hazardous substances above threshold values

Approvals

Approvals

Feed-through terminal block - PT 4-QUATTRO - 3211797

Approvals

Approvals

UL Recognized / cUL Recognized / CSA / LR / VDE Gutachten mit Fertigungsüberwachung / IECEE CB Scheme / EAC / BV / EAC / NK / DNV GL / PRS / cULus Recognized

Ex Approvals

ATEX / IECEx / EAC Ex

Approval details

UL Recognized http://database.ul.com/cgi-bin/XYV/template/LISEXT/1FRAME/index.htm FILE E 60425

	B	C
mm²/AWG/kcmil	24-10	24-10
Nominal current IN	30 A	30 A
Nominal voltage UN	600 V	600 V

cUL Recognized http://database.ul.com/cgi-bin/XYV/template/LISEXT/1FRAME/index.htm FILE E 60425

	B	C
mm²/AWG/kcmil	24-10	24-10
Nominal current IN	30 A	30 A
Nominal voltage UN	600 V	600 V

CSA http://www.csagroup.org/services/testing-and-certification/certified-product-listing/ 13631

	B	C
mm²/AWG/kcmil	24-10	24-10
Nominal current IN	30 A	30 A
Nominal voltage UN	600 V	600 V

LR http://www.lr.org/en 12/20038 (E2)

VDE Gutachten mit Fertigungsüberwachung http://www.vde.com/en/Institute/OnlineService/VDE-approved-products/Pages/Online-Search.aspx 40036696

mm²/AWG/kcmil	0.2-4.0
Nominal current IN	32 A

Feed-through terminal block - PT 4-QUATTRO - 3211797

Approvals

Nominal voltage UN	800 V

IECEE CB Scheme http://www.iecee.org/ DE1-55168_M1

mm²/AWG/kcmil	0.2-4
Nominal current IN	32 A
Nominal voltage UN	800 V

EAC EAC-Zulassung

BV http://www.veristar.com/portal/veristarinfo/generalinfo/approved/approvedProducts/equipmentAndMaterials 39980/A0 BV

EAC 7500651.22.01.00246

NK http://www.classnk.or.jp/hp/en/ 14ME0913

DNV GL https://www.dnvgl.com/ TAE000010T

PRS http://www.prs.pl/ TE/2107/880590/16

cULus Recognized http://database.ul.com/cgi-bin/XYV/template/LISEXT/1FRAME/index.htm

Phoenix Contact 2016 © - all rights reserved
http://www.phoenixcontact.com

PTTB 2,5

Order No.: 3210567

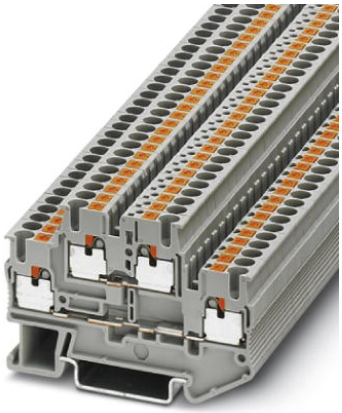

http://catalog.phoenixcontact.net/phoenix/treeViewClick.do?UID=3210567

Double-level terminal block, Cross section: 0.14 mm² - 4 mm², AWG: 26 - 12, Connection type: Push-in connection, Width: 5.2 mm, Color: gray, Mounting type: NS 35/7.5, NS 35/15

Commercial data	
EAN	4 046356 418980
sales group	A632
Pack	50 Pcs.
Customs tariff	85369010
Gross weight in pieces	0.012897 KG
Net weight per piece	0.012786 KG
Catalog page information	Page 99 (CL1-2011)

Product notes

WEEE/RoHS-compliant since: 06/16/2008

http://www.download.phoenixcontact.com
Please note that the data given here has been taken from the online catalog. For comprehensive information and data, please refer to the user documentation. The General Terms and Conditions of Use apply to Internet downloads.

Technical data

General

Number of levels	2
Number of connections	4
Color	gray
Insulating material	PA
Inflammability class according to UL 94	V0

Dimensions	
Width	5.2 mm
Length	68 mm
Height NS 35/7,5	47.5 mm
Height NS 35/15	55 mm

Technical data	
Rated surge voltage	6 kV
Pollution degree	3
Surge voltage category	III
Insulating material group	I
Connection in acc. with standard	IEC 60947-7-1
Nominal current I_N	22 A
Nominal voltage U_N	500 V
Open side panel	ja
Shock protection test specification	DIN EN 50274 (VDE 0660-514):2002-11
Back of the hand protection	guaranteed
Finger protection	guaranteed
Surge voltage test setpoint	7.3 kV
Result of surge voltage test	Test passed
Power frequency withstand voltage setpoint	1.89 kV
Result of power-frequency withstand voltage test	Test passed
Checking the mechanical stability of terminal points (5 x conductor connection)	Test passed
Bending test rotation speed	10 rpm
Bending test turns	135
Bending test conductor cross section/weight	0.14 mm² / 0.2 kg
	2.5 mm² / 0.7 kg
	4 mm² / 0.9 kg
Result of bending test	Test passed
Conductor cross section tensile test	0.14 mm²
Tractive force setpoint	10 N
Conductor cross section tensile test	2.5 mm²
Tractive force setpoint	50 N
Conductor cross section tensile test	4 mm²
Tractive force setpoint	60 N

Tensile test result	Test passed
Tight fit on carrier	NS 35
Setpoint	1 N
Result of tight fit test	Test passed
Requirements, voltage drop	≤ 3.2 mV
Result of voltage drop test	Test passed
Temperature-rise test	Test passed
Conductor cross section short circuit testing	2.5 mm²
Short-time current	0.3 kA
Conductor cross section short circuit testing	4 mm²
Short-time current	0.48 kA
Short circuit stability result	Test passed
Ageing test for screwless modular terminal block temperature cycles	192
Result of aging test	Test passed
Proof of thermal characteristics (needle flame) effective duration	30 s
Result of thermal test	Test passed
Test specification, oscillation, broadband noise	DIN EN 50155 (VDE 0115-200):2008-03
Test spectrum	Service life test category 1, class B, on vehicle body
Test frequency	f_1 = 5 Hz to f_2 = 150 Hz
ASD level	0.02 g²/Hz
Acceleration	0.8 g
Test duration per axis	5 h
Test directions	X-, Y- and Z-axis
Oscillation, broadband noise test result	Test passed
Test specification, shock test	DIN EN 50155 (VDE 0115-200):2008-03
Shock form	Half-sine
Acceleration	5 g
Shock duration	30 ms
Number of shocks per direction	3
Test directions	X-, Y- and Z-axis (pos. and neg.)
Shock test result	Test passed
Temperature index, insulating material (DIN EN 60216-1 (VDE 0304-21))	130 °C

Connection data

Conductor cross section solid min.	0.14 mm²
Conductor cross section solid max.	4 mm²
Conductor cross section stranded min.	0.14 mm²
Conductor cross section stranded max.	2.5 mm²
Conductor cross section AWG/kcmil min.	26
Conductor cross section AWG/kcmil max	12
Conductor cross section stranded, with ferrule without plastic sleeve min.	0.14 mm²
Conductor cross section stranded, with ferrule without plastic sleeve max.	2.5 mm²
Conductor cross section stranded, with ferrule with plastic sleeve min.	0.14 mm²
Conductor cross section stranded, with ferrule with plastic sleeve max.	2.5 mm²
2 conductors with same cross section, stranded, TWIN ferrules with plastic sleeve, max.	0.5 mm²
Connection method	Push-in connection
Stripping length	10 mm
Internal cylindrical gage	A3

Certificates / Approvals

Certification	CSA, cULus Recognized, GOST, VDE Zeichengenehmigung, ABS, BV, GL, LR, NK, RS, IECEE CB Scheme
Certification Ex:	ATEX, IECEx
Certifications applied for:	

Accessories

Item	Designation	Description
Assembly		
3030747	ATP-STTB 4	Partition plate, Length: 88.7 mm, Width: 2 mm, Height: 53 mm, Color: gray

3022218	CLIPFIX 35	Snap-on end bracket, for 35 mm NS 35/7.5 or NS 35/15 DIN rail, can be fitted with Zack strip ZB 8 and ZB 8/27, terminal strip marker KLM 2 and KLM, width: 9.5 mm, color: gray
3022276	CLIPFIX 35-5	Quick mounting end clamp for NS 35/7,5 DIN rail or NS 35/15 DIN rail, can be fitted with ZB 5 and ZBF 5 zack marker strip, KLM 2, KLM3, and KML3L terminal strip marker, parking option for FBS...5, FBS...6, KSS 5, KSS 6, width: 5.15 mm, color: gray
0801704	NS 35/ 7,5 AL UNPERF 2000MM	DIN rail, material: Aluminum, unperforated, height 7.5 mm, width 35 mm, length: 2 m
1206560	NS 35/ 7,5 CAP	DIN rail end piece, for DIN rail NS 35/7.5
0801762	NS 35/ 7,5 CU UNPERF 2000MM	DIN rail, material: Copper, unperforated, height 7.5 mm, width 35 mm, length: 2 m
0801733	NS 35/ 7,5 PERF 2000MM	DIN rail, material: steel galvanized and passivated with a thick layer, perforated, height 7.5 mm, width 35 mm, length: 2000 mm
0801681	NS 35/ 7,5 UNPERF 2000MM	DIN rail, material: Steel, unperforated, height 7.5 mm, width 35 mm, length: 2 m
1204119	NS 35/ 7,5 WH PERF 2000MM	DIN rail 35 mm (NS 35)
1204122	NS 35/ 7,5 WH UNPERF 2000MM	DIN rail 35 mm (NS 35)
1206421	NS 35/ 7,5 ZN PERF 2000MM	DIN rail, material: Galvanized, perforated, height 7.5 mm, width 35 mm, length: 2 m
1206434	NS 35/ 7,5 ZN UNPERF 2000MM	DIN rail, material: Galvanized, unperforated, height 7.5 mm, width 35 mm, length: 2 m
1201756	NS 35/15 AL UNPERF 2000MM	DIN rail, deep drawn, high profile, unperforated, 1.5 mm thick, material: aluminum, height 15 mm, width 35 mm, length 2000 mm
1206573	NS 35/15 CAP	DIN rail end piece, for DIN rail NS 35/15
1201895	NS 35/15 CU UNPERF 2000MM	DIN rail, material: Copper, unperforated, 1.5 mm thick, height 15 mm, width 35 mm, length: 2 m
1201730	NS 35/15 PERF 2000MM	DIN rail, material: steel galvanized and passivated with a thick layer, perforated, height 15 mm, width 35 mm, length: 2000 mm
1201714	NS 35/15 UNPERF 2000MM	DIN rail, material: Steel, unperforated, height 15 mm, width 35 mm, length: 2 m
0806602	NS 35/15 WH PERF 2000MM	DIN rail 35 mm (NS 35)
1204135	NS 35/15 WH UNPERF 2000MM	DIN rail 35 mm (NS 35)
1206599	NS 35/15 ZN PERF 2000MM	DIN rail, material: Galvanized, perforated, height 15 mm, width 35 mm, length: 2 m
1206586	NS 35/15 ZN UNPERF 2000MM	DIN rail, material: Galvanized, unperforated, height 15 mm, width 35 mm, length: 2 m
1201798	NS 35/15-2,3 UNPERF 2000MM	DIN rail, material: Steel, unperforated, 2.3 mm thick, height 15 mm, width 35 mm, length: 2 m

Bridges

3030161	FBS 2-5	Plug-in bridge, Number of positions: 2, Color: red

3030174	FBS 3-5	Plug-in bridge, Number of positions: 3, Color: red
3030187	FBS 4-5	Plug-in bridge, Number of positions: 4, Color: red
3030190	FBS 5-5	Plug-in bridge, Number of positions: 5, Color: red
3030213	FBS 10-5	Plug-in bridge, Number of positions: 10, Color: red
3030226	FBS 20-5	Plug-in bridge, Number of positions: 20, Color: red
3038930	FBS 50-5	Plug-in bridge, Number of positions: 50, Color: red
Covers		
3211634	D-PTTB 2,5	End cover, Length: 68 mm, Width: 2.2 mm, Color: gray
General		
0800886	E/NS 35 N	End clamp, width: 9.5 mm, color: gray
3032185	FBS-PV	Vertical potential bridge, to connect the upper and lower level
3048564	PS-8/2,3MM RD	Test adapter, Color: red
Marking		
0800967	STP 5-2	Double marker carrier, snaps onto the double-level spring-cage terminal block STTB 2.5 and STTB 4, labeled with ZB 5 or ZBF 5
0800970	STP 5-2/S	Double marker carrier, snaps onto the double-level spring-cage terminal block ZFKK 1,5, with MSTBV or ICV pick-off
0818153	UC-TMF 5	Marker for terminal blocks, Sheet, white, Unlabeled, Can be labeled with: Bluemark, Plotter, BLUEMARK CLED, Mounting type: Snap into flat marker groove, For terminal block width: 5.2 mm, Lettering field: 4.6 x 5.1 mm
0824638	UC-TMF 5 CUS	Marker for terminal blocks, Can be ordered: By sheet, white, Labeled according to customer specifications, Mounting type: Snap into flat marker groove, For terminal block width: 5.2 mm, Lettering field: 4.6 x 5.1 mm
0828744	UCT-TMF 5	Marker for terminal blocks, Sheet, white, Unlabeled, Can be labeled with: Thermomark C+, Thermomark C, Bluemark, BLUEMARK CLED, Mounting type: Snap into flat marker groove, For terminal block width: 5.2 mm, Lettering field: 4.4 x 4.7 mm
0829658	UCT-TMF 5 CUS	Marker for terminal blocks, Can be ordered: By sheet, white, Labeled according to customer specifications, Mounting type: Snap into flat marker groove, For terminal block width: 5.2 mm, Lettering field: 4.4 x 4.7 mm
0825025	ZBF 5 CUS	Zack Marker strip, flat, Can be ordered: Strip, white, Labeled according to customer specifications, Mounting type: Snap into flat marker groove, For terminal block width: 5 mm, Lettering field: 5.15 x 5.15 mm
0808642	ZBF 5:UNBEDRUCKT	Zack Marker strip, flat, Strip, white, Unlabeled, Can be labeled with: Plotter, Mounting type: Snap into flat marker groove, For terminal block width: 5 mm, Lettering field: 5.1 x 5.2 mm

Plug/Adapter

3036725	DP PS-5	Spacer plate, Color: red
3002843	ISH 2,5/0,2	Insulation stop sleeve, Color: white
3002856	ISH 2,5/0,5	Insulation stop sleeve, Color: gray
3002869	ISH 2,5/1,0	Insulation stop sleeve, Color: black
0201731	MPS-IH BK	Insulating sleeve, Color: black
0201689	MPS-IH BU	Insulating sleeve, Color: blue
0201702	MPS-IH GN	Insulating sleeve, Color: green
0201728	MPS-IH GY	Insulating sleeve, Color: gray
0201676	MPS-IH RD	Insulating sleeve, Color: red
0201663	MPS-IH WH	Insulating sleeve, Color: white
0201692	MPS-IH YE	Insulating sleeve, Color: yellow
0201744	MPS-MT	Test plugs
3032871	PAI-4-N GY	Test adapter, Color: gray
3030983	PS-5	Test adapter, Color: red
3038723	PS-5/2,3MM RD	Test plugs, Color: red
3038736	PS-6/2,3MM RD	Test plugs, Color: red

Software

5146040	CLIP-PROJECT ADVANCED	Multilingual software for easy planning of Phoenix Contact on DIN rails together with the integrated TRABTECH-select software module for planning comprehensive surge protection concepts.
5146053	CLIP-PROJECT PROFESSIONAL	Multi-lingual software for terminal strip project planning. A marking module allows professional labeling of markers and labels for marking terminal blocks, conductors, cables and devices. The additionally integrated software module TRABTECH-select for planning comprehensive surge protection concepts.

Tools

1204517	SZF 1-0,6X3,5	Actuation tool, for ST terminal blocks, also suitable for use as a bladed screwdriver, size: 0.6 x 3.5 x 100 mm, 2-component grip, with non-slip grip

Drawings

Circuit diagram

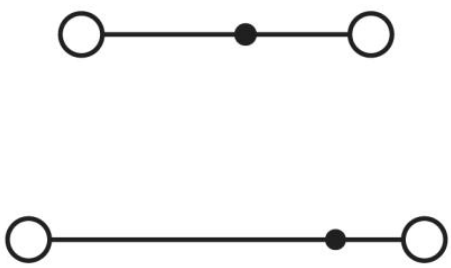

End clamp - CLIPFIX 35-5 - 3022276

Please be informed that the data shown in this PDF Document is generated from our Online Catalog. Please find the complete data in the user's documentation. Our General Terms of Use for Downloads are valid (http://phoenixcontact.com/download)

Quick mounting end clamp for NS 35/7,5 DIN rail or NS 35/15 DIN rail, with marking option, with parking option for FBS...5, FBS...6, KSS 5, KSS 6, width: 5.15 mm, color: gray

Why buy this product

- Phoenix Contact has engineered its CLIPFIX end brackets to maintain a secure grip on the various DIN rail systems
- Design width of just 5.2 mm
- Parking option for bridges and plugs
- Large-surface labeling

Key Commercial Data

Packing unit	50 STK
Minimum order quantity	50 STK
GTIN	4 017918 194154
Weight per Piece (excluding packing)	5.13 g
Custom tariff number	39269099
Country of origin	Germany

Technical data

Dimensions

Height	35 mm
Length	48.5 mm
Width	5.15 mm

General

Material	PA
Color	gray

Standards and Regulations

Flammability rating according to UL 94	V2

End clamp - CLIPFIX 35-5 - 3022276

Classifications

eCl@ss

eCl@ss 4.0	27141199
eCl@ss 4.1	27141199
eCl@ss 5.0	27141135
eCl@ss 5.1	27141135
eCl@ss 6.0	27141135
eCl@ss 7.0	27141135
eCl@ss 8.0	27141135
eCl@ss 9.0	27141135

ETIM

ETIM 2.0	EC000761
ETIM 3.0	EC001041
ETIM 4.0	EC001041
ETIM 5.0	EC001041

UNSPSC

UNSPSC 6.01	30212109
UNSPSC 7.0901	39121708
UNSPSC 11	39121708
UNSPSC 12.01	39121708
UNSPSC 13.2	39121708

Phoenix Contact 2016 © - all rights reserved
http://www.phoenixcontact.com

TRIO-PS/ 3AC/24DC/10

Order No.: 2866459

http://eshop.phoenixcontact.ca/phoenix/treeViewClick.do?UID=2866459

Commercial data	
EAN	4 046356 046701
Pack	1 pcs.
Customs tariff	85044094
Catalog page information	Page 593 (IF-2011)

Product notes

WEEE/RoHS-compliant since: Sep/06/2006

Please note that the data given here has been taken from the online catalog. For comprehensive information and data, please refer to the user documentation at http://www.download.phoenixcontact.com. The General Terms and Conditions of Use apply to Internet downloads.

Product description

TRIO POWER is the DIN-rail-mountable power supply unit with basic functions. With an output voltage of 5 V DC, 12 V DC, 24 V DC, and 48 V DC and 1- and 3-phase versions with 60 W or 960 W, it is particularly suited for use in series production in mechanical engineering. The wide-range input and international certification package allow worldwide implementation.

The high MTBF of 500,000 h stands for high supply reliability. The devices can be connected in parallel to increase the capacity and redundancy.

The clear LED signaling and the device connection with double terminal block for plus and minus for fast potential distribution are further advantages of this device series. A third minus terminal block simplifies the grounding on the secondary side. All power supply units are idle-proof and short-circuit-proof and provide a regulated and adjustable output voltage.

Technical data

Input data

Nominal input voltage	2x / 3x 400 V AC ... 500 V AC
AC input voltage range	3x 320 V AC ... 575 V AC (for 3-phase operation)
	2x 360 V AC ... 575 V AC (for 2-phase operation)
AC frequency range	45 Hz ... 65 Hz
Current consumption	Approx. 3x 0.6 A (400 V AC)
	3x 0.5 A (480 V AC)
Inrush surge current	< 15 A
Power failure bypass	> 20 ms (400 V AC)
	> 25 ms (480 V AC)
Permissible backup fuse	B6
	B10
	B16
Required backup fuse (device and line protection)	(externally via 3 circuit breakers 6 A, 10 A or 16 A, characteristic B)
Power factor (cos phi)	0.59
Type of protection	Transient surge protection
Protective circuit/component	Varistor

Output data

Nominal output voltage	24 V DC ±1%
Setting range of the output voltage	22.5 V DC ... 29.5 V DC (> 24 V constant capacity)
Output current	10 A (-25°C ... 55°C)
Derating	55 °C ... 70 °C (2.5%/K)
Connection in parallel	Yes, for redundancy and increased capacity
Connection in series	Yes
Max. capacitive load	Unlimited
Current limitation	Approx. 15 A
Control deviation	< 1 % (change in load, static 10% ... 90%)
	< 2 % (change in load, dynamic 10% ... 90%)
	< 0.1 % (change in input voltage ±10%)
Residual ripple	< 10 mV_{PP}
Peak switching voltages nominal load	< 30 mV_{PP}
Maximum power dissipation idling	6 W
Power loss nominal load max.	28 W

General data	
Width	60 mm
Height	130 mm
Depth	152.5 mm
Net weight	1.3 kg
Operating voltage display	Green LED
Efficiency	> 89 % (at 400 V AC and nominal values)
Insulation voltage input/output	4 kV AC (type test)
	2 kV AC (routine test)
Degree of protection	IP20
Protection class	I, with PE connection
MTBF (IEC 61709, SN 29500)	> 500000 h
Ambient temperature (operation)	-25 °C ... 70 °C (> 55° C derating)
Ambient temperature (storage/transport)	-40 °C ... 85 °C
Max. permissible relative humidity (operation)	95 % (at 25 °C, no condensation)
Mounting position	horizontal DIN rail NS 35, EN 60715
Assembly instructions	Can be aligned: Horizontally 0 mm, vertically 50 mm
Electromagnetic compatibility	Conformance with EMC Directive 2004/108/EC
Noise immunity	EN 61000-6-2:2005
Low Voltage Directive	Conformance with LV directive 2006/95/EC
Standard – Electrical equipment of machines	EN 60204
Standard - Safety of transformers	EN 61558-2-17
Standard - Electrical safety	EN 60950-1/VDE 0805 (SELV)
	EN 61558-2-17
Standard – Electronic equipment for use in electrical power installations and their assembly into electrical power installations	EN 50178/VDE 0160 (PELV)
Standard – Safety extra-low voltage	EN 60950-1 (SELV)
	EN 60204 (PELV)
Standard - Safe isolation	DIN VDE 0100-410
	DIN VDE 0106-1010
Standard – Protection against electric shock	DIN 57100-410
Standard – Protection against shock currents, basic requirements for protective separation in electrical equipment	DIN VDE 0106-101
Standard – Limitation of mains harmonic currents	EN 61000-3-2

UL approvals	UL/C-UL listed UL 508
	UL/C-UL Recognized UL 60950
Surge voltage category	III

Connection data, input

Connection method	Screw connection
Conductor cross section solid min.	0.2 mm²
Conductor cross section solid max.	2.5 mm²
Conductor cross section stranded min.	0.2 mm²
Conductor cross section stranded max.	2.5 mm²
Conductor cross section AWG/kcmil min.	24
Conductor cross section AWG/kcmil max	14
Stripping length	9 mm
Screw thread	M2,5

Connection data, output

Connection method	Screw connection
Conductor cross section solid min.	0.2 mm²
Conductor cross section solid max.	2.5 mm²
Conductor cross section stranded min.	0.2 mm²
Conductor cross section stranded max.	2.5 mm²
Conductor cross section AWG/kcmil min.	16
Conductor cross section AWG/kcmil max	12
Stripping length	9 mm

Signaling

Status display	"DC OK" LED green
Note on status display	U_{OUT} > 21.5 V: LED lights up

Drawings

Block diagram

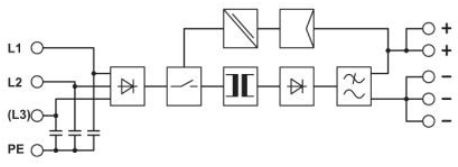

Dimensioned drawing

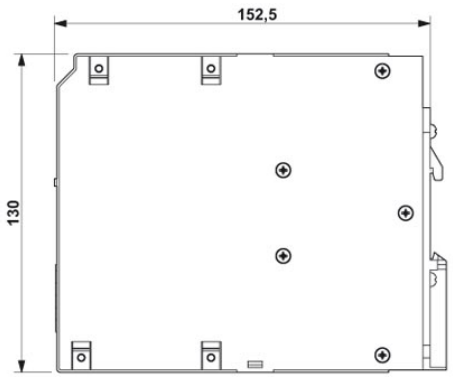

Address

PHOENIX CONTACT Ltd
8240 Parkhill Drive
Milton, Ontario L9T 5V7,Canada
Phone (800) 890-2820
Fax (905) 864-7900
http://www.phoenixcontact.ca

© 2012 Phoenix Contact
Technical modifications reserved;

HOL-SEALERS® Non-Metallic Hole Seals

Industry Standards

UL 508A Component Recognized; Type 3R, 4, 4X, 12, 13; File No. E61997

CSA File No. 42186: Type 3R, 4, 4X, 12, 13
NEMA/EEMAC Type 3R, 4, 4X, 12, 13
IEC 60529, IP66

Application

Designed for use in corrosive environments to seal extra pushbutton holes, conduit openings and knockout openings against dust, dirt, oil and water. These hole seals are suitable for sealing enclosure openings in industries such as petroleum and chemical processing, wastewater processing, pulp and paper, outdoor monitoring and any other industry exposed to harsh environments.

Innovative 3-in-1 self-centering design

- Thread self-centers on one hole size
- Nut orientation "A" self-centers on a second hole size (see Nut Orientation drawing)
- Nut orientation "B" self-centers on a third hole size

Features

- Innovative 3-in-1 self-centering design reduces inventory requirements; 4 models cover 12 common industry cutouts ranging from 1/2 in. to 4 in.
- Non-metallic construction provides superior corrosion resistance for reliability in harsh environments
- UV stabilized; ideal for direct sunlight (avoids fiberbloom associated with fiberglass)
- Chemically resistant to a broad range of chemicals
- Durable and impact resistant; resists cracking
- Sold in quantities of 2 per catalog number
- Cost-effective alternative to stainless steel
- Polyester material has a UL 94 rating of 5VA
- Easy to install; no tools required

Specifications

- Thread and nut are constructed of non-glass-filled polyester
- Oil-resistant gasket

Finish

RAL 7035 light-gray textured finish

Bulletin: A80HS

Standard Product **Non-Metallic Hole Seals**

Catalog Number	AxBxC in./mm	Qty.	D in./mm	E in./mm	F in./mm	Max. Hole Diameter in./mm	Outside Diameter in./mm	Torque (in. lbs.)
ASPB05075NM	1.56 x 0.85 x 0.12	2	1.28	1.48	.47	1.28	1.56	15
	40 x 22 x 3		32	38	12	33	40	
ASPB100125NM	2.19 x 1.19 x 0.12	2	1.18	2.14	.51	1.91	2.19	20
	56 x 30 x 3		30	54	13	49	56	
AS150200250NM	3.50 x 1.95 x 0.12	2	.95	3.42	.51	3.14	3.50	35
	89 x 49 x 3		24	87	13	80	89	
AS300350400NM	5.12 x 3.55 x 0.12	2	.81	5.05	.51	4.77	5.12	50
	130 x 90 x 3		21	128	13	121	130	

Seal

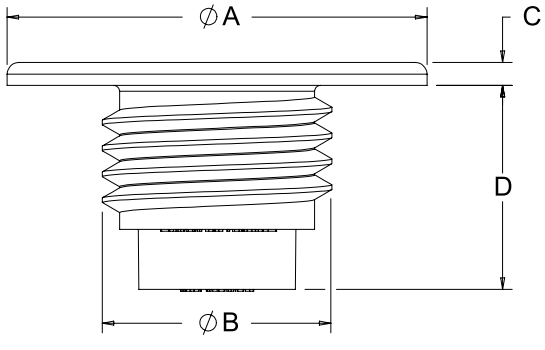

Nut

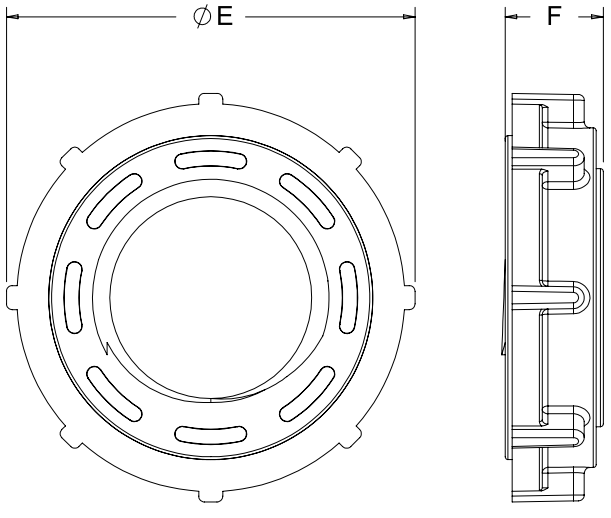

87929497

© 2010 Pentair Technical Products

HOL-SEALERS® Fit These Hole Sizes

Catalog Number	Fits	Min. Hole Dia. (inch)	Min. Hole Dia. (millimeter)	Nut Orientation
ASPB05075NM	.5-in. conduit holes	.86	22	A
	22.5-mm pushbutton holes	.88	22	A
	.75-in. conduit holes	1.09	28	A
ASPB100125NM	30.5-mm pushbutton holes	1.20	31	A
	1-in. conduit holes	1.36	35	B
	1.25-in. conduit holes	1.70	43	A
AS150200250NM	1.5-in. conduit holes	1.95	50	A
	2-in. conduit holes	2.38	60	B
	2.5-in. conduit holes	2.88	73	A
AS300350400NM	3-in. conduit holes	3.50	89	A
	3.5-in. conduit holes	4.00	102	B
	4-in. conduit holes	4.50	114	A

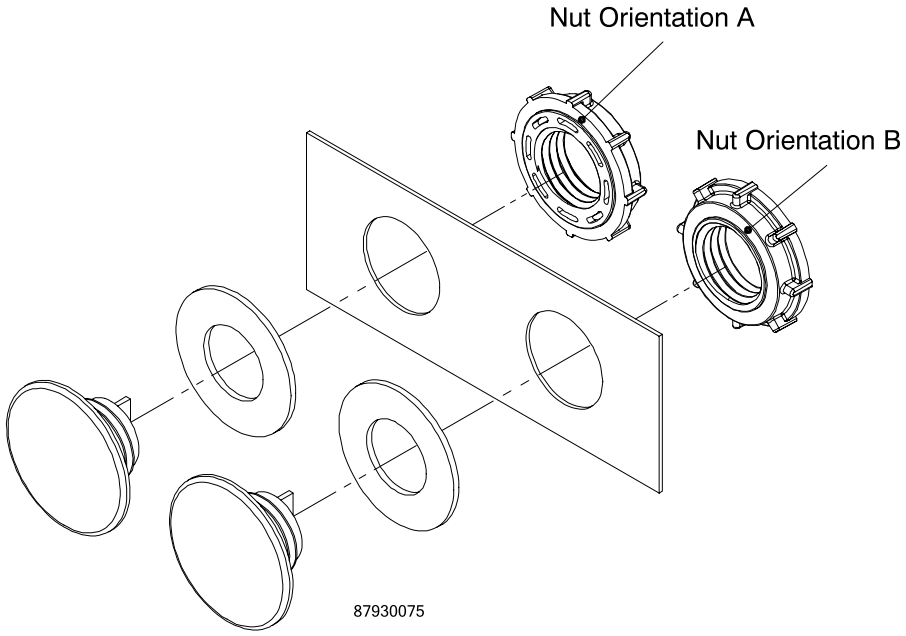

© 2010 Pentair Technical Products

3-pole contactors, for motor control and power switching

AC / DC Control supply				Type	AF09	AF12	AF16	AF26	AF30	AF38	AF40	AF52	AF65	AF80	AF96
IEC	AC-3	Rated operational power θ ≤ 60 °C for AF09 ... AF370 θ ≤ 55 °C for AF400 ... AF2650	220 - 230 - 240 V	kW	2.2	3	4	6.5	9	11	11	15	18.5	22	25
			380 - 400 V	**kW**	**4**	**5.5**	**7.5**	**11**	**15**	**18.5**	**18.5**	**22**	**30**	**37**	**45**
			415 V	kW	4	5.5	9	11	15	18.5	22	30	37	45	55
			440 V	kW	4	5.5	9	15	18.5	22	22	30	37	45	55
			500 V	kW	5.5	7.5	9	15	18.5	22	22	30	37	45	55
			690 V	kW	5.5	7.5	9	15	18.5	22	22	30	37	45	55
			1000 V	kW	–	–	–	–	–	–	–	–	–	35	40
		Rated operational current	**380 - 400 V**	**A**	**9**	**12**	**18**	**26**	**32**	**38**	**40**	**53**	**65**	**80**	**96**
	AC-1	Rated operational current	**θ ≤ 40 °C, 690 V**	**A**	**25**	**28**	**30**	**45**	**50**	**50**	**70**	**100**	**105**	**125**	**130**
UL / CSA	1-phase motor rating		120 V	hp	0.75	1	1.5	2	2	2	3	3	5	7.5	7.5
			240 V	hp	1.5	2	3	3	5	5	7.5	10	15	15	20
	3-phase motor rating		200 - 208 V	hp	2	3	5	7.5	10	10	10	15	20	25	30
			220 - 240 V	hp	2	3	5	7.5	10	10	15	20	25	30	30
			440 - 480 V	**hp**	**5**	**7.5**	**10**	**15**	**20**	**25**	**30**	**40**	**50**	**60**	**60**
			550 - 600 V	hp	7.5	10	15	20	25	30	40	50	60	75	75
	General use rating		**600 V**	**A**	**25**	**28**	**30**	**45**	**50**	**50**	**60**	**80**	**90**	**105**	**115**
NEMA	NEMA Size				**00**	**0**	–	**1**	–	–	**2**	–	–	**3**	–

Main accessories

Auxiliary contact blocks	Front mounting	**CA4-10** (1 x N.O.) **CA4-01** (1 x N.C.)				
	Side mounting	**CAL4-11** (1 x N.O. + 1 x N.C.)				
Timers	Electronic	**TEF4-ON** **TEF4-OFF**				
Interlocking units	Mechanical	**VM4**			**VM96-4**	
	Mechanical / Electrical	**VEM4**				
Connection sets	For reversing contactors	**BER16-4**	**BER38-4**		**BER65-4**	**BER96-4**
Surge suppressors		Built-in surge protection				

Overload relays

Thermal relays	Class 10 (Class 10A for TF140, TA200DU)	**TF42** (0.10...38 A)			**TF65** (22...67 A)	**TF96** (40...96 A)
Electronic relays	Class 10E, 20E, 30E	**EF19** (0.10...18.9 A)	**EF19** (0.10...18.9 A) **EF45** (9...45 A)		**EF65** (20...70 A)	**EF96** (36...100 A)

Manual motor starters

	Thermal / magnetic protection Class 10	**MS116** (0.10...32 A) Ics up to 50 kA for class 10 A		**MS165** (10...65 A) Ics up to 100 kA (1)		**MS5100** (40...100 A) Ics up to 50 kA
		MS132 (0.10...32 A) Ics up to 100 kA			**MS495** (45...100 A) Ics up to 50 kA	
				MS497 (22...100 A) Ics up to 100 kA		
	Magnetic only types	**MO132** (0.16...32 A) Ics up to 100 kA		**MO165** (16...65 A) Ics up to 100 kA (1)		**MO5100** (70...100 A) Ics up to 36 kA
					MO496 (32...100 A) Ics up to 100 kA	
						MO495 (63...100 A) Ics up to 50 kA
Accessories	For contactor mounting	**BEA16-4**	**BEA38-4**		**BEA65-4** (2)	

(1) MS165/MO165 are suitable for use with AF09 ... AF30 for North american applications.
(2) BEA65-4 suitable for MS165 and MO165 only.

AF09 ... AF38 3-pole contactors
4 to 18.5 kW
AC / DC operated

AF09-30-10

AF26-30-00

5

Description

AF09 ... AF38 contactors are mainly used for controlling 3-phase motors and power circuits up to 690 V AC and 220 V DC. These contactors are of the block type design with 3 main poles.

– control circuit: AC or DC operated with electronic coil interface accepting a wide control voltage range (e.g. 100...250 V AC and DC), only 4 control voltage ranges covering 24...500V 50/60 Hz and 20...500 V DC
  - can manage large control voltage variations
  - reduced panel energy consumption
  - very distinct closing and opening.
– built-in surge suppression
– add-on auxiliary contact blocks for front or side mounting and a wide range of accessories.

Ordering details

IEC		UL/CSA		Rated control circuit voltage Uc min. ... Uc max.			Auxiliary contacts fitted		Type (1)	Order code		Weight
Rated operational power 400 V AC-3	current θ ≤ 40 °C AC-1	3-phase motor rating 480 V	General use rating 600 V AC									Pkg (1 pce)
kW	A	hp	A	V 50/60 Hz	V DC							kg
4	25	5	25	24...60	-	(2)	1	0	AF09-30-10-41	1SBL137001R4110		0.270
							0	1	AF09-30-01-41	1SBL137001R4101		0.270
				48...130	48...130		1	0	AF09-30-10-12	1SBL137001R1210		0.270
							0	1	AF09-30-01-12	1SBL137001R1201		0.270
				100...250	100...250		1	0	AF09-30-10-13	1SBL137001R1310		0.270
							0	1	AF09-30-01-13	1SBL137001R1301		0.270
				250...500	250...500		1	0	AF09-30-10-14	1SBL137001R1410		0.310
							0	1	AF09-30-01-14	1SBL137001R1401		0.310
5.5	28	7.5	28	24...60	-	(2)	1	0	AF12-30-10-41	1SBL157001R4110		0.270
							0	1	AF12-30-01-41	1SBL157001R4101		0.270
				48...130	48...130		1	0	AF12-30-10-12	1SBL157001R1210		0.270
							0	1	AF12-30-01-12	1SBL157001R1201		0.270
				100...250	100...250		1	0	AF12-30-10-13	1SBL157001R1310		0.270
							0	1	AF12-30-01-13	1SBL157001R1301		0.270
				250...500	250...500		1	0	AF12-30-10-14	1SBL157001R1410		0.310
							0	1	AF12-30-01-14	1SBL157001R1401		0.310
7.5	30	10	30	24...60	-	(2)	1	0	AF16-30-10-41	1SBL177001R4110		0.270
							0	1	AF16-30-01-41	1SBL177001R4101		0.270
				48...130	48...130		1	0	AF16-30-10-12	1SBL177001R1210		0.270
							0	1	AF16-30-01-12	1SBL177001R1201		0.270
				100...250	100...250		1	0	AF16-30-10-13	1SBL177001R1310		0.270
							0	1	AF16-30-01-13	1SBL177001R1301		0.270
				250...500	250...500		1	0	AF16-30-10-14	1SBL177001R1410		0.310
							0	1	AF16-30-01-14	1SBL177001R1401		0.310
11	45	15	45	24...60	-	(2)	0	0	AF26-30-00-41	1SBL237001R4100		0.310
				48...130	48...130		0	0	AF26-30-00-12	1SBL237001R1200		0.310
				100...250	100...250		0	0	AF26-30-00-13	1SBL237001R1300		0.310
				250...500	250...500		0	0	AF26-30-00-14	1SBL237001R1400		0.350
15	50	20	50	24...60	-	(2)	0	0	AF30-30-00-41	1SBL277001R4100		0.310
				48...130	48...130		0	0	AF30-30-00-12	1SBL277001R1200		0.310
				100...250	100...250		0	0	AF30-30-00-13	1SBL277001R1300		0.310
				250...500	250...500		0	0	AF30-30-00-14	1SBL277001R1400		0.350
18.5	50	25	50	24...60	-	(2)	0	0	AF38-30-00-41	1SBL297001R4100		0.310
				48...130	48...130		0	0	AF38-30-00-12	1SBL297001R1200		0.310
				100...250	100...250		0	0	AF38-30-00-13	1SBL297001R1300		0.310
				250...500	250...500		0	0	AF38-30-00-14	1SBL297001R1400		0.350

(1) For other auxiliary contacts arrangements, please contact your ABB local sales organization.
(2) For 24...60 V 50/60 Hz - 20...60 V DC, use AF..Z-30-..-21.

Main dimensions mm, *inches*

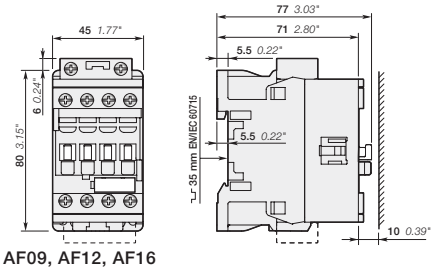

AF09, AF12, AF16

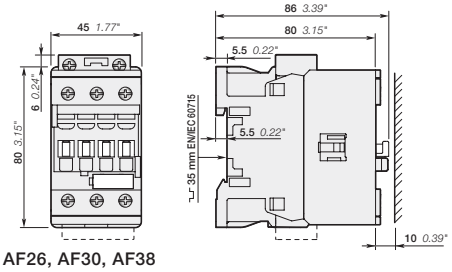

AF26, AF30, AF38

1SBC101371S0201 - Rev. C

MINIATURE CIRCUIT BREAKERS

SU200M Datasheet

Branch protection acc. to CSA C22.2 No.5 / UL 489

The miniature circuit breaker SU200 M is ABB's solution for UL 489 branch circuit protection up to 480 Y/277 V AC and 96 V DC. This circuit breaker is an all-round device for AC and DC applications for universal use in North American and global markets due to its approvals acc. to the international standards UL, CSA and IEC. Moreover, SU 200 M is fully compatible with System pro M compact® UL 489 accessories.

—
01 SU201M / SU203M miniature circuit breakers

Features

- High performance MCB with 10 kA interrupting capacity acc. to UL 489 / CSA 22.2 No. 5 and 15 kA breaking capacity acc. to IEC/EN 60947-2
- Certified up to In = 40 A at 480 Y/277 V AC acc. to UL 489 /CSA 22.2 No. 5
- Certified for AC and DC use acc. to UL and CSA
- 40 °C reference temperature acc. to UL and CSA
- Current limiting acc. to UL 489
- Clear contact position indication in red/green ("real CPI")
- Laser printing provides clear product information on device
- Robust thermoplastic housing material for better protection against external influences
- Unique, patented twin terminal for wiring up to 35 mm² with captive screws
- Possibility to add more than one wire per terminal up to 25A

Standards and approvals

Standards	
UL 489	
CSA 22.2. No. 5	
IEC/EN 60947-2	
Approvals	
UL 489	US
CSA 22.2. No. 5	CA
VDE	DE
CCC	CN

Miniature Circuit Breaker SU200M

Technical data

General Data	
Standards	UL 489, CSA 22.2 No. 5, IEC/EN 60947-2
Poles	1P, 2P, 3P, 4P
Tripping characteristics	C, K, Z
Rated current I_n	0.2…63A
Rated frequency f	50 / 60 Hz, DC (0 Hz)
Rated insulation voltage U_i acc. to IEC/EN 60664-1	250 Vac (phase to ground), 440 Vac (phase to phase)
Overvoltage category	III
Pollution degree	3
Data acc. to UL / CSA	
Rated voltage	1P: 240 Vac up to 63A 1P: 277 Vac up to 40A (C and Z characteristic) 1P: 277 Vac up to 35A (K characteristic) 1P: 48Vdc up to 63A 2P +: 480Y / 277 Vac up to 40A (C and Z characteristic) 2P +: 480Y / 277 Vac up to 35A (K characteristic) 2P +: 240 Vac up to 63A 2P +: 96 Vdc (2P in series)
Rated interrupting capacity acc. to UL 1077	-
Short-circuit current rating acc. to UL 489	10kA
Application	-
Reference temperature for tripping characteristics	40 °C
Electrical endurance	6,000 ops (AC), 6,000 ops. (DC); 1 cycle (1s - ON, 9s - OFF)
Mechanical Data	
Housing	Insulation group II, RAL 7035
Toggle	Insulation group II, black, sealable
Contact position indication	CPI (red ON / green OFF)
Protection degree acc. to EN 60529	IP20, IP40 in enclosure with cover
Mechanical endurance	20,000 ops.
Shock resistance acc. to IEC/EN 60068-2-27	25 g - 2 shocks - 13 ms
Vibration resistance acc. to IEC/EN 60068-2-6	5g - 20 cycles at 5…150…5 Hz with load 0.8 I_n
Environmental conditions (damp heat) acc. to IEC/EN 60068-2-30	28 cycles with 55°C/90-96% and 25°C/95-100%
Ambient temperature	-25 … +55 °C (with performance derating possibility)
Storage temperature	-40 … +70 °C
Installation	
Terminal	Failsafe bi-directional cylinder-lift terminal
Cross-section of conductors (top / bottom) Solid, Stranded	35 mm^2 / 35 mm^2
Flexible	25 mm^2 / 25 mm^2 18 - 4 AWG
Cross-section of busbars (top / bottom)	10 mm^2 / 10 mm^2 14 - 8 AWG
Tightening Torque	2.8 Nm AWG 18-16: 8.85 in-lbs. AWG 14-10: 17.7 in-lbs. AWG 8-4: 39.8 in-lbs.
Screwdriver	No. 2 Pozidrive
Mounting	On DIN rail 35 mm acc. to EN 60715 by fast clip
Mounting position	any
Supply	optional
Dimensions and weight	
Mounting dimensions acc. to DIN 43880	Mounting dimension 1
Pole dimensions (H x D x W)	88 x 69 x 17.5 mm
Pole weight	approx. 115 g
Combination with aux. elements	
Auxiliary contact	Yes
Signal contact	Yes
Shunt trip	Yes

Miniature Circuit Breaker SU200 M

Tripping characteristics

Tripping characteristics

Acc. to	Tripping characteristics	Rated current	Thermal release [1] Currents:		Tripping time	Electromagnetic release [2] Range of instantaneous tripping	Tripping time
			conventional non-tripping current	conventional tripping current			
		I_n	I_1	I_2			
UL489	C	0.5 to 63 A	$1.03 \cdot I_n$		> 1 h	$5 \cdot I_n$	> 0.2 s
				$1.25 \cdot I_n$	< 1 h [3]	$10 \cdot I_n$	< 0.2 s
	K	0.5 to 63 A	$1.03 \cdot I_n$		> 1 h	$10 \cdot I_n$	> 0.2 s
				$1.25 \cdot I_n$	< 1 h [3]	$14 \cdot I_n$	< 0.2 s
	Z	0.5 to 63 A	$1.03 \cdot I_n$		> 1 h	$2 \cdot I_n$	> 0.2 s
				$1.25 \cdot I_n$	< 1 h [3]	$3 \cdot I_n$	< 0.2 s

1) The thermal releases are calibrated to a nominal reference ambient temperature of 40 °C. In the case of higher ambient temperatures, the current values fall by approx. 6 % for each 10 K temperature rise.

2) The indicated tripping values of electromagnetic tripping devices apply to a frequency of 50/60 Hz. The thermal release operates independent of frequency.

3) As from operating temperature (after I_1 > 1h)

C characteristic

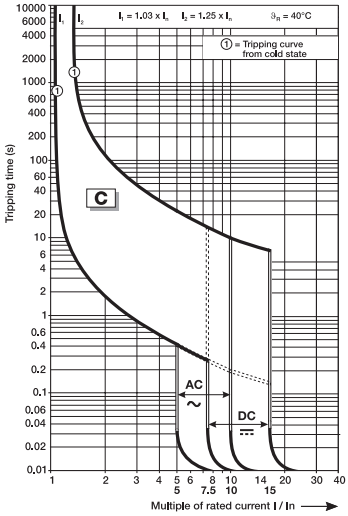

K characteristic

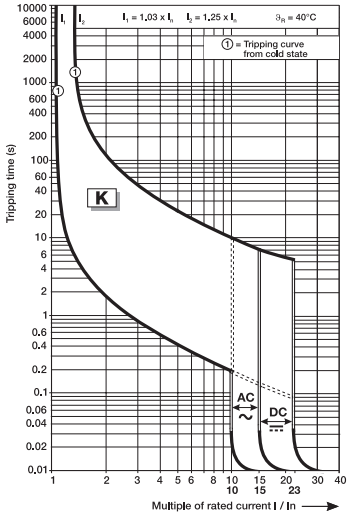

Z characteristic

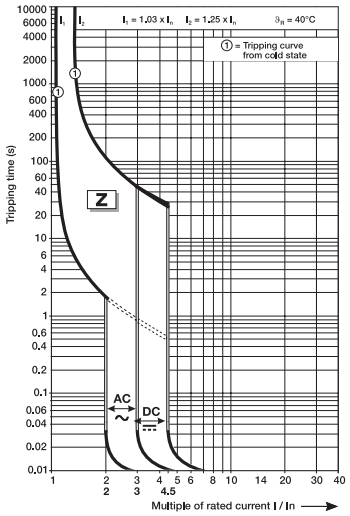

Miniature Circuit Breaker SU200M

Accessory overview and dimensional drawing

—
H:
Auxiliary contact
(S2C-H6RU)

S/H:
Signal contact
(S2C-S6RU)

ST:
Shunt trip for SU200M MCB
(S2C-A...U)

The certification of the accessories has been done with one accessory only. The number of electrical operations is limited to 4,000 operations for the maximum combinations and the combinations including shunt trips.

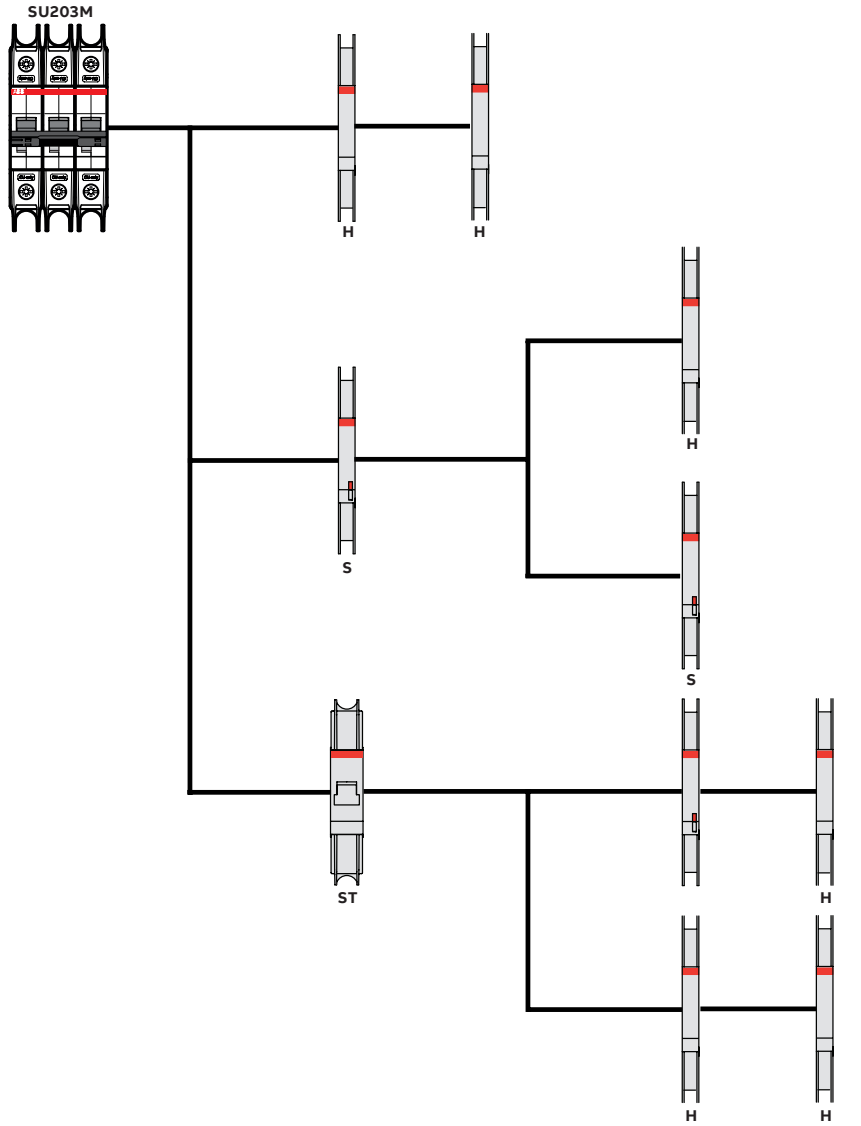

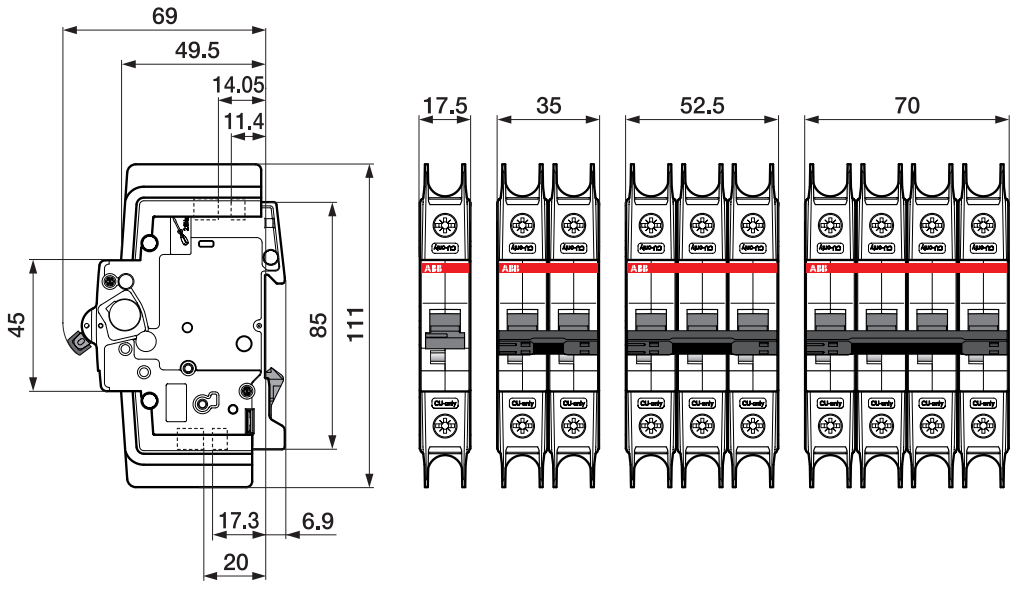

Miniature Circuit Breaker SU200M
for branch circuit protection acc. to UL 489

The miniature circuit breaker SU 200 M is ABB's solution for UL 489 branch circuit protection up to 480 Y/277 V AC and 96 V DC. This circuit breaker is an all-round device for AC and DC applications for universal use in North American and global markets due to its approvals acc. to the international standards UL, CSA and IEC. Moreover, SU 200 M is fully compatible with System pro *M* compact® UL 489 accessories.

Features

- High performance MCB with 10 kA interrupting capacity acc. to UL 489 / CSA 22.2 No. 5 and 15 kA breaking capacity acc. to IEC/EN 60947-2
- Certified up to I_n = 40 A at 480 Y/277 V AC acc. to UL 489 / CSA 22.2 No. 5
- Certified for AC and DC use acc. to UL and CSA
- 40 °C reference temperature acc. to UL and CSA
- Current limiting acc. to UL 489
- Clear contact position indication in red/green ("real CPI")

Standards and approvals

Standards	
UL 489	
CSA 22.2 No. 5	
IEC/EN 60947-2	
Approvals	
UL 489	US
CSA 22.2 No. 5	CA
VDE	DE
CCC	CN

General Data		
Standards		UL 489, CSA 22.2 No. 5, IEC/EN 60947-2
Poles		1P, 2P, 3P, 4P
Tripping characteristics		C, K, Z
Rated current I_n		0.2 - 63 A
Rated frequency f		50 / 60 Hz, DC (0 Hz)
Rated insulation voltage U_i acc. to IEC/EN 60664-1		250 V AC (phase to ground), 440 V AC (phase to phase)
Overvoltage category		III
Pollution degree		3
IEC/EN 60947-2		
Rated operational voltage U_e		1P: 230 V AC; 2P, 3P, 4P: 400 V AC
Max. power frequency recovery voltage U_{max}	AC	1P: 253 V AC; 2P, 3P, 4P: 440 V AC
Min. operating voltage		12 V AC, 12 V DC
Rated ultimate short-circuit breaking capacity I_{cu}		15 kA
Rated service short-circuit breaking capacity I_{cs}		≤ 40 A: 11.25 kA > 40 A: 7.5 kA
Rated impulse withstand voltage U_{imp} (1.2/50µs)		4 kV (test voltage 6.2 kV at sea level, 5 kV at 2,000 m)
Dielectric test voltage		2 kV (50 / 60Hz, 1 min.)
Reference temperature for tripping characteristics		30 °C
Electrical endurance		I_n < 30 A: 20,000 ops (AC), I_n ≥ 30 A: 10,000 ops. (AC); 1 cycle (2 s - ON, 13 s - OFF, I_n ≤ 32 A), 1 cycle (2 s - ON, 28 s - OFF, I_n > 32 A)
UL / CSA		
Rated voltage	AC	1P: 277 V AC up to 40 A for C, Z char.,
	AC	277 V AC up to 35 A for K char., 240 V AC
	AC	2P, 3P, 4P: 480 Y / 277 V AC up to 40 A for C, Z char.,
	AC	480 Y / 277 V AC up to 35 A for K char., 240 V AC
	DC	1P: 48 V DC; 2P: 96 V DC (2p in series)
Rated interrupting capacity acc. to UL 1077		–
Short-circuit current rating acc. to UL 489		10 kA
Application		–
Reference temperature for tripping characteristics		40 °C
Electrical endurance		6,000 ops (AC), 6,000 ops. (DC); 1 cycle (1 s - ON, 9 s - OFF)
Mechanical data		
Housing		Insulation group II, RAL 7035
Toggle		Insulation group II, black, sealable
Contact position indication		Real CPI (green OFF / red ON)
Protection degree acc. to DIN EN 60529		IP20*, IP40 in enclosure with cover
Mechanical endurance		20,000 ops.
Shock resistance acc. to IEC/EN 60068-2-27		25 g - 2 shocks - 13 ms
Vibration resistance acc. to IEC/EN 60068-2-6		5g - 20 cycles at 5…150…5 Hz with load 0.8 I_n
Environmental conditions (damp heat cyclic) acc. to IEC/EN 60068-2-30		28 cycles with 55°C/90-96% and 25°C/95-100%
Ambient temperature		-25 ... +55°C
Storage temperature		-40 ... +70 °C
Installation		
Terminal		Failsafe bi-directional cylinder-lift terminal
Cross-section of conductors (top/bottom)		solid, stranded: 35 mm² / 35 mm² flexible: 25 mm² / 25 mm² 18 – 4 AWG
Cross-section of busbars (top/bottom)		10 mm² / 10 mm² 18 – 8 AWG
Torque		2.8 Nm AWG 18-16: 13.3 in-lbs. AWG 14-10: 17.7 in-lbs. AWG 8-4: 39.8 in-lbs.
Screwdriver		No. 2 Pozidrive
Mounting		On DIN rail 35 mm acc. to EN 60715 by fast clip
Mounting position		any
Supply		optional
Dimensions and weight		
Mounting dimensions acc. to DIN 43880		Mounting dimension 3
Pole dimensions (H x D x W)		111 x 69 x 17.5 mm
Pole weight		approx. 125 g
Combination with auxiliary elements		
Auxiliary contact		Yes
Signal contact		Yes
Shunt trip		Yes

Tripping characteristics

Acc. to	Tripping characte-ristics	Rated current	Thermal release [1]			Electromagnetic release [2]		
		I_n	Currents: conventional non-tripping current I_1	conventional tripping current I_2	Tripping time	Range of instantaneous tripping		Tripping time
IEC/EN 60947-2	C	0.5 to 63 A	1.05 · I_n	1.3 · I_n	> 1 h < 1 h [3]	5 · I_n	10 · I_n	> 0.2 s < 0.2 s
	K	0.2 to 63 A	1.05 · I_n	1.3 · I_n	> 1 h < 1 h [3]	10 · I_n	14 · I_n	> 0.2 s < 0.2 s
	Z	0.5 to 63 A	1.05 · I_n	1.3 · I_n	> 1 h < 1 h [3]	2 · I_n	3 · I_n	> 0.2 s < 0.2 s

[1] The thermal releases are calibrated to a nominal reference ambient temperature of 30 °C.
In the case of higher ambient temperatures, the current values fall by approx. 6 % for each 10 K temperature rise.

[2] The indicated tripping values of electromagnetic tripping devices apply to a frequency of 50/60 Hz. The thermal release operates independent of frequency.

[3] As from operating temperature (after I_1 > 1h)

C characteristic

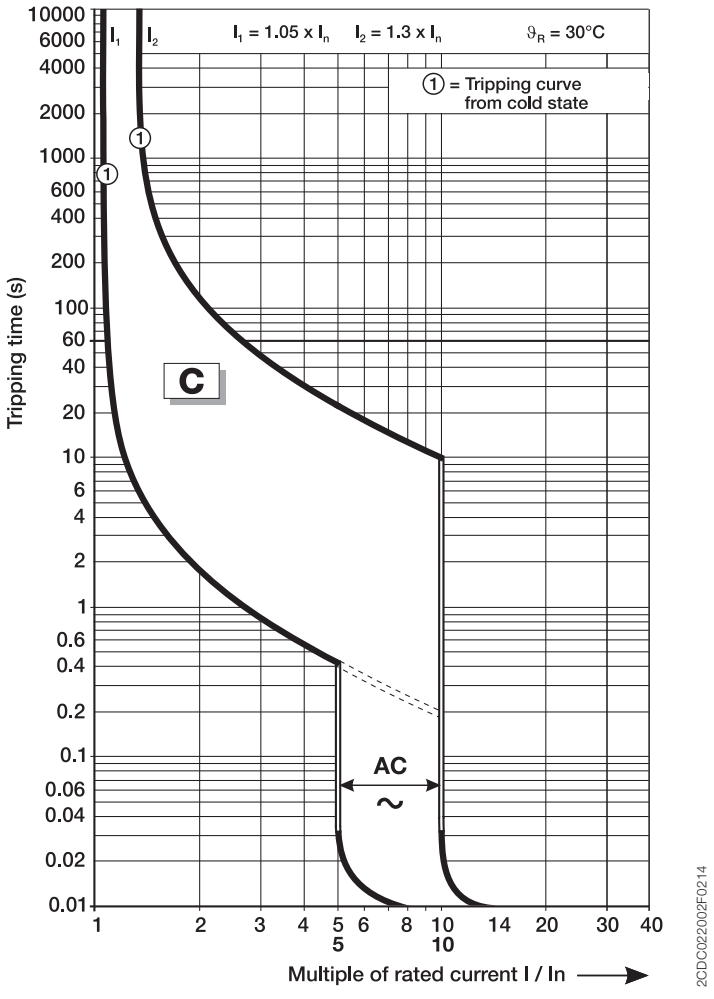

K characteristic

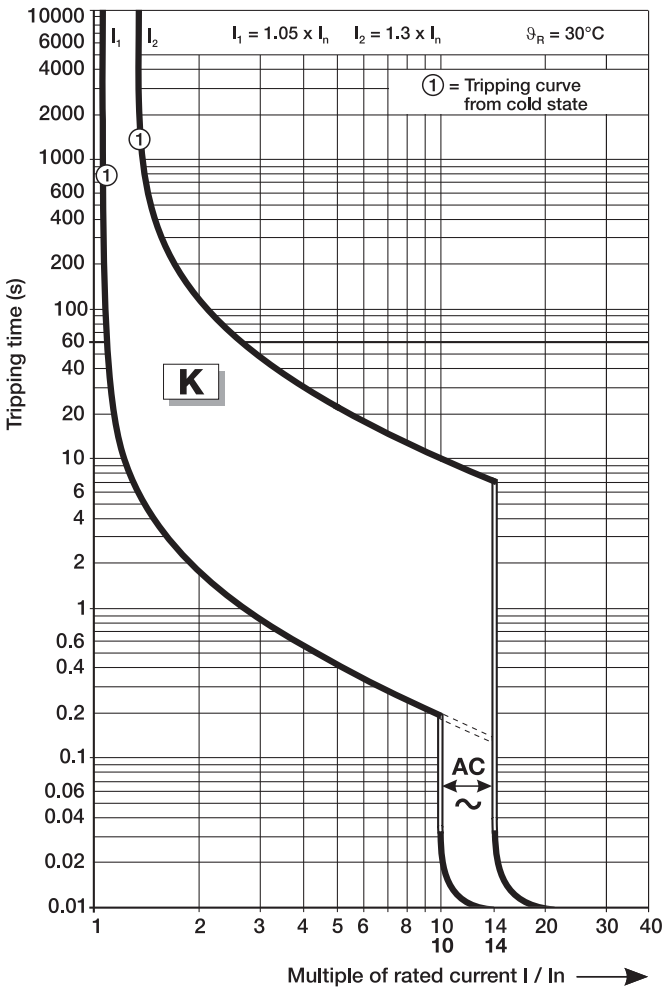

Z characteristic

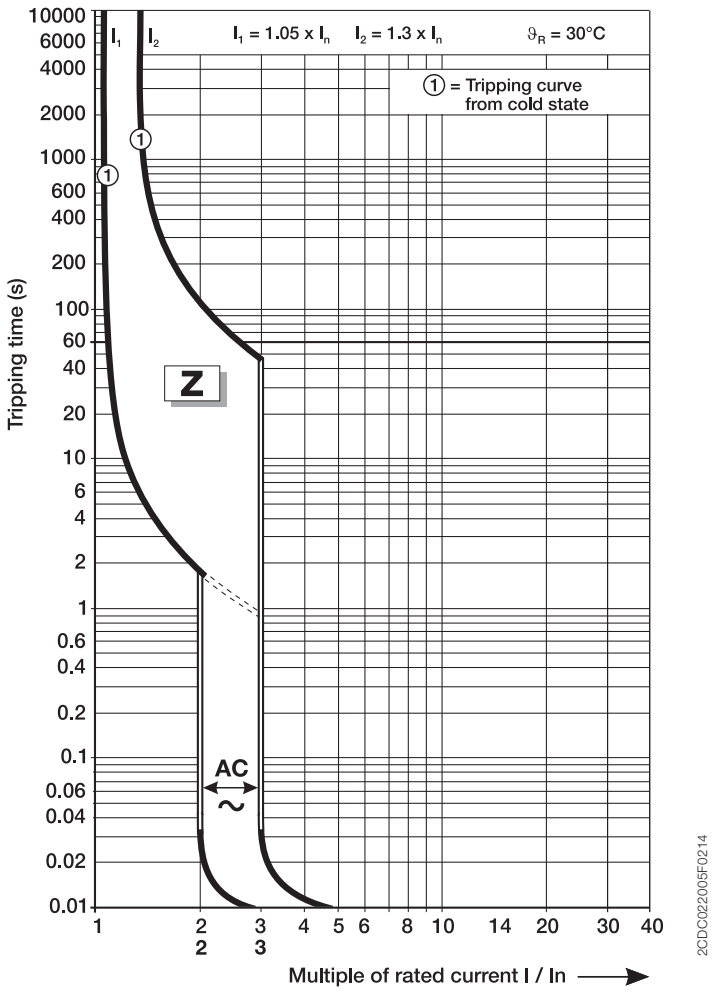

Type	Voltage	Current	Power Factor	Phase	I_{peak}	I^2t
		A			kA	kA^2S
SU203M-K0.2	480Y/277	10000	0.45-0.5	3	0.026	0.008
SU203M-K7	480Y/277	4095	0.45-0.5	3	2.3	11.9
SU203M-K7	480Y/277	7500	0.45-0.5	3	3.4	16.7
SU203M-K7	480Y/277	10000	0.45-0.5	3	4.6	19.0
SU203M-K20	480Y/277	4095	0.45-0.5	3	2.9	18.1
SU203M-K20	480Y/277	7500	0.45-0.5	3	4.3	28.1
SU203M-K20	480Y/277	10000	0.45-0.5	3	6.4	34.6
SU203M-K35	480Y/277	4095	0.45-0.5	3	3.4	27.9
SU203M-K35	480Y/277	7500	0.45-0.5	3	4.7	33.1
SU203M-K35	480Y/277	10000	0.45-0.5	3	9.0	72.0
SU203M-C40	480Y/277	4095	0.45-0.5	3	3.4	22.8
SU203M-C40	480Y/277	7500	0.45-0.5	3	5.1	42.5
SU203M-C40	480Y/277	10000	0.45-0.5	3	9.3	74.6
SU201M-K0.2	277	10000	0.45-0.5	1	0.7	0.092
SU201M-K7	277	4095	0.45-0.5	1	2.5	10.5
SU201M-K7	277	7500	0.45-0.5	1	3.4	16.9
SU201M-K7	277	10000	0.45-0.5	1	3.4	14.5
SU201M-K20	277	4095	0.45-0.5	1	2.8	14.7
SU201M-K20	277	7500	0.45-0.5	1	4.1	23.5
SU201M-K20	277	10000	0.45-0.5	1	4.7	32.5
SU201M-K35	277	4095	0.45-0.5	1	3.0	19.8
SU201M-K35	277	7500	0.45-0.5	1	4.7	36.5
SU201M-K35	277	10000	0.45-0.5	1	4.4	22.1
SU201M-C40	277	4095	0.45-0.5	1	3.6	22.9
SU201M-C40	277	7500	0.45-0.5	1	5.3	52.6
SU201M-C40	277	10000	0.45-0.5	1	5.9	44.9
SU203M-K63	240	4095	0.45-0.5	3	3.6	19.9
SU203M-K63	240	7500	0.45-0.5	3	5.1	33.0
SU203M-K63	240	10000	0.45-0.5	3	6.3	43.3
SU201M-K63	240	4095	0.45-0.5	1	3.9	33.8
SU201M-K63	240	7500	0.45-0.5	1	5.2	43.8
SU201M-K63	240	10000	0.45-0.5	1	6.5	61.8

Accessory overview

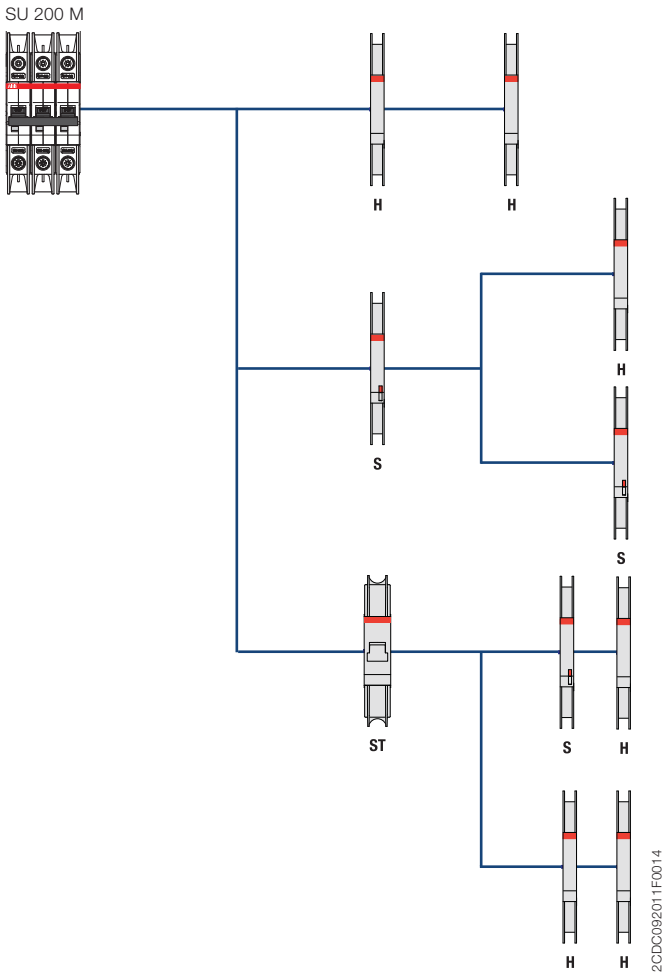

H	Auxiliary contact (change-over contact)	S2C-H6RU
S/H	Signal contact	S2C-S6RU
ST	Shunt trip	S2C-A...U

The certification of the Accessories has been done with one accessory only.

The number of electrical operations is limited to 4,000 operations for the maximum combinations and the combinations including shunt trips.

Dimensional drawing

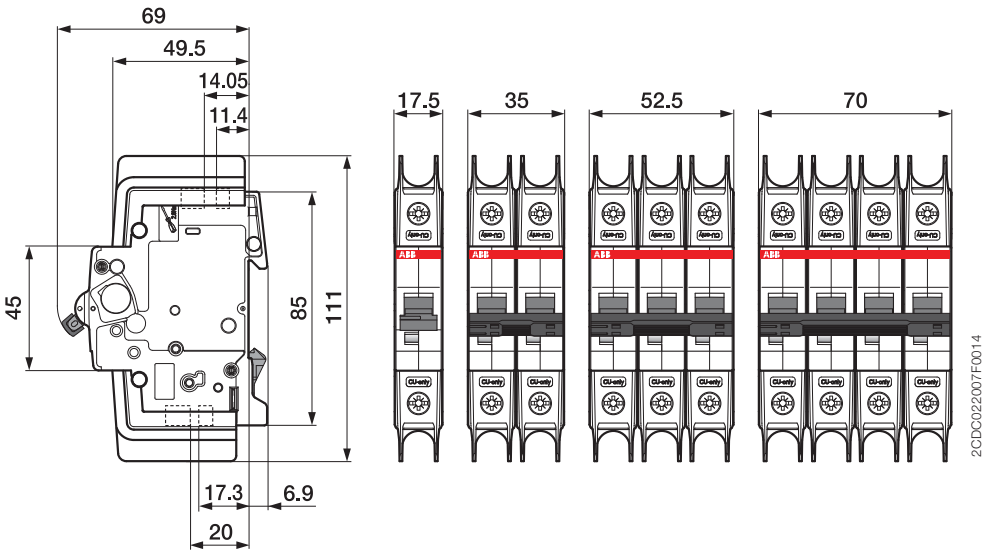

SU201M-C10

PDC Item 51

Breaker, 10A 1P AC/DC C ABB - ABB SU201M-C10- Trojan P/N 917139-MC1100 - Page 1/3

General Information

Extended Product Type:	SU201M-C10
Product ID:	2CDS271337R0104
EAN:	4016779930840
Catalog Description:	Miniature Circuit Breaker - SU200M - 1P - C
Long Description:	SU201M-C10 Miniature Circuit Breaker C-Char., 10kA, 10A, 1P UL489

Additional Information

Actuator Material:	Insulation Group II, Black, Sealable
Ambient Air Temperature:	Operation -25 ... +55 °C Storage -40 ... +70 °C
Built-In Depth (t_2):	69 mm
Connecting Capacity:	Busbar 10 / 10 mm² Flexible with Ferrule 0.75 ... 25 mm² Flexible 0.75 ... 25 mm² Rigid 0.75 ... 35 mm² Stranded 0.75 ... 35 mm²
Connecting Capacity UL/CSA:	Busbar 18-8 AWG Conductor 18-4 AWG
Contact Position Indication:	Red ON / Green OFF
Country of Origin:	Bulgaria (BG)
Customs Tariff Number:	85362010
Data Sheet, Technical Information:	2CDC002177D0202
Declaration of Conformity - CE:	2CDK400595D2702
Degree of Protection:	IP20
EAN:	4016779930840
EPLAN Catalog Tree:	Electrical engineering / Protection devices / General
EPLAN Function Definition:	Circuit breaker / Single circuit breaker / Circuit breaker 1_2
ETIM 5:	EC000042 - Miniature circuit breaker (MCB)
ETIM 6:	EC000042 - Miniature circuit breaker (MCB)
Environmental Conditions:	28 cycles with 55 °C / 90-96 % and 25 °C / 95-100 %
Housing Material:	Insulation Group I, RAL 7035
Installation Size:	acc. to DIN 43880 3
Instructions and Manuals:	2CDC002177D0202
Interrupting Rating acc. to UL1077:	(277 V AC) 10 kA
Invoice Description:	SU201M-C10 Miniature Circuit Breaker C-Char., 10kA, 10A, 1P
Maximum Operating Voltage UL/CSA:	277 V AC 48 V DC
Mechanical Endurance:	20000 cycle
Minimum Order Quantity:	1 piece
Mounting Position:	Any
Mounting on DIN Rail:	TH35-7.5 (35 x 7.5 mm Mounting Rail) acc. to IEC 60715 TH35-15 (35 x 15 mm Mounting Rail) acc. to IEC 60715
Number of Poles:	1
Number of Protected Poles:	1
Overvoltage Category:	III

Package Level 1 Gross Weight:	1.3 kg
Package Level 1 Height:	82 mm
Package Level 1 Length:	191 mm
Package Level 1 Units:	10 piece
Package Level 1 Width:	121 mm
Package Level 2 EAN:	4016779937665
Package Level 2 Gross Weight:	16 kg
Package Level 2 Height:	210 mm
Package Level 2 Length:	395 mm
Package Level 2 Units:	72 piece
Package Level 2 Width:	35 mm
Pole Net Weight:	0.125 kg
Pollution Degree:	3
Power Loss:	2,1 W at Rated Operating Conditions per Pole 2,1 W
Power Supply Connection:	Arbitrary
Product Main Type:	SU200M
Product Name:	Miniature Circuit Breaker
Product Net Depth:	69 mm
Product Net Height:	111 mm
Product Net Weight:	0.125 kg
Product Net Width:	17.5 mm
Rated Current (I_n):	10 A
Rated Frequency (f):	50 Hz 60 Hz DC Hz
Rated Insulation Voltage (U_i):	acc. to IEC/EN 60664-1 440 V
Rated Operational Voltage:	acc. to IEC 60947-2 230 V AC
Rated Service Short-Circuit Breaking Capacity (I_{cs}):	(230 V AC) 11.3 kA
Rated Ultimate Short-Circuit Breaking Capacity (I_{cu}):	(230 V AC) 15 kA
Recommended Screw Driver:	Pozidriv 2
Remarks:	IP40 in enclosure with cover
Resistance to Shock acc. to IEC 60068-2-27:	25g / 2 shocks / 13 ms
Resistance to Vibrations acc. to IEC 60068-2-6:	5g, 20 cycles at 5 ... 150 ... 5 Hz with load 0.8 In
RoHS Information:	2CDK400596D0201
RoHS Status:	Following EU Directive 2002/95/EC August 18, 2005 and amendment
Screw Terminal Type:	Failsafe Bi-directional Cylinder-lift Terminal
Selling Unit of Measure:	piece
Standards:	CSA 22.2 No. 5 IEC/EN 60947-2 UL 489
Terminal Type:	Screw Terminals
Tightening Torque:	2.8 N·m
Tripping Characteristic:	C
UNSPSC:	39121614
Width in Number of Modular Spacings:	1

eClass:	7.0 27141901
Accessories Available:	Yes
Interrupting Rating acc. to UL489:	(277 V AC) 10 kA (48 V DC) 10 kA

SU203M-C10

PDC Item 50

Breaker, 10A 3P AC/DC C ABB - ABB SU203M-C10 - Trojan P/N 917139-MC3100 - Page 1/2

Extended Product Type:	SU203M-C10
Product ID:	2CDS273337R0104
EAN:	4016779931304
Catalog Description:	Miniature Circuit Breaker - SU200M - 3P - C
Long Description:	SU203M-C10 Miniature Circuit Breaker C-Char., 10kA, 10A, 3P UL489

Categories

Products » Low Voltage Products and Systems » Modular DIN Rail Products » Miniature Circuit Breakers MCBs

Ordering

Minimum Order Quantity:	1 piece
Customs Tariff Number:	85362010

Popular Downloads

Data Sheet, Technical Information:	2CDC002177D0202

Dimensions

Product Net Width:	52.5 mm
Product Net Depth:	69 mm
Product Net Height:	111 mm
Product Net Weight:	0.375 kg

Technical

Standards:	CSA 22.2 No. 5 IEC/EN 60947-2 UL 489
Number of Poles:	3
Tripping Characteristic:	C
Rated Current (I_n):	10 A
Rated Operational Voltage:	acc. to IEC 60947-2 400 V AC
Power Loss:	6,3 W at Rated Operating Conditions per Pole 2,1 W
Rated Insulation Voltage (U_i):	acc. to IEC/EN 60664-1 440 V
Rated Frequency (f):	50 Hz 60 Hz DC Hz
Rated Ultimate Short-Circuit Breaking Capacity (I_{cu}):	(400 V AC) 15 kA
Rated Service Short-Circuit Breaking Capacity (I_{cs}):	(400 V AC) 11.2 kA
Overvoltage Category:	III
Pollution Degree:	3
Housing Material:	Insulation Group I, RAL 7035
Contact Position Indication:	Red ON / Green OFF
Degree of Protection:	IP20
Remarks:	IP40 in enclosure with cover
Mechanical Endurance:	20000 cycle
Terminal Type:	Screw Terminals
Screw Terminal Type:	Failsafe Bi-directional Cylinder-lift Terminal
Connecting Capacity:	Busbar 10 / 10 mm² Flexible with Ferrule 0.75 ... 25 mm² Flexible 0.75 ... 25 mm² Rigid 0.75 ... 35 mm² Stranded 0.75 ... 35 mm²
Tightening Torque:	2.8 N·m
Recommended Screw Driver:	Pozidriv 2
Mounting on DIN Rail:	TH35-7.5 (35 x 7.5 mm Mounting Rail) acc. to IEC 60715 TH35-15 (35 x 15 mm Mounting Rail) acc. to IEC 60715
Mounting Position:	Any

Environmental

Ambient Air Temperature:	Operation -25 ... +55 °C

Resistance to Shock acc. to IEC 60068-2-27:	25g / 2 shocks / 13 ms
Resistance to Vibrations acc. to IEC 60068-2-6:	5g, 20 cycles at 5 ... 150 ... 5 Hz with load 0.8 In
Environmental Conditions:	28 cycles with 55 °C / 90-96 % and 25 °C / 95-100 %
RoHS Status:	Following EU Directive 2002/95/EC August 18, 2005 and amendment

Technical UL/CSA

Maximum Operating Voltage UL/CSA:	480Y / 277 V AC
Connecting Capacity UL/CSA:	Busbar 18-8 AWG Conductor 18-4 AWG

Certificates and Declarations (Document Number)

Declaration of Conformity - CE:	2CDK400595D2702
Instructions and Manuals:	2CDC002177D0202
RoHS Information:	2CDK400596D0201

Container Information

Package Level 1 Units:	3 piece
Package Level 1 Width:	121 mm
Package Level 1 Length:	191 mm
Package Level 1 Height:	82 mm
Package Level 1 Gross Weight:	1.175 kg
Package Level 1 EAN:	4016779935760
Package Level 2 Units:	24 piece
Package Level 2 Width:	275 mm
Package Level 2 Length:	395 mm
Package Level 2 Height:	210 mm
Package Level 2 Gross Weight:	16 kg
Package Level 2 EAN:	4016779939560

Classifications

ETIM 5:	EC000042 - Miniature circuit breaker (MCB)
ETIM 6:	EC000042 - Miniature circuit breaker (MCB)
eClass:	7.0 27141901
UNSPSC:	39121614

Tmax XT ranges

Introduction

There are the 4 new SACE Tmax XT UL/CSA frames:

– XT1 available up to 125A
– XT2 available up to 125A with 600Vac ratings
– XT3 available up to 225A
– XT4 available up to 250A with 600Vac ratings

600Y/347VAC, 480VAC

XT1 - 125A

XT3 - 225A

600VAC

XT2 - 125A

XT4 - 250A

Tmax XT ranges

Circuit breakers for power distribution

Molded case circuit breakers (MCCB)			XT1		
Frame Size		[A]	125		
Rated		80% rated	■		
		100% rated TM	up to 100A		
		100% rated Ekip	-		
Poles		[No.]	3, 4		
Rated voltage	(AC) 50-60Hz	[V]	600Y/347		
	(DC)	[V]	500		
Versions			Fixed, Plug-in		
Interrupting ratings			N	S	H
240 V (AC)		[kA]	50	65	100
480 V (AC)		[kA]	25	35	65
600Y/347 V (AC)		[kA]	18	22	25
600 V (AC)		[kA]	–	–	–
250 V (DC) 2 poles in series		[kA]	35	42	50
500 V (DC) 3 poles in series		[kA]	–	–	–
500 V (DC) 4 poles in series		[kA]	35	50	50
600 V (DC) 3 poles in series		[kA]	–	–	–
Mechanical life		[No. Operations]	25000		
		[No. Hourly operations]	240		
Dimensions - Fixed (Width x Depth x Height)	3 poles	[mm]/[in]	[76,2 x 70 x 130] / [3 x 2.75 x 5.12]		
	4 poles	[mm]/[in]	[101,6 x 70 x 130] / [4 x 2.75 x 5.12]		
Weight	Fixed 3/4 poles	[kg]/[lbs]	[1,1 - 2.43] / [1,4 - 3.07]		
	Plug-in (EF) 3/4 poles	[kg]/[lbs]	[2,21 - 4.87] / [2,82 - 6.22]		
	Withdrawable (EF) 3/4 poles	[kg]/[lbs]	–		
Total opening time	CB with SOR	[ms]	15		
	CB with UVR	[ms]	15		
Trip units for power distribution					
TMF			■		
TMA			–		
Ekip LS/I			–		
Ekip I			–		
Ekip LSI			–		
Ekip LSIG			–		
Ekip E-LSIG			–		
Interchangeable protection trip units			–		

(1) Current Limiting circuit breaker in 480V AC and 600V AC
(2) 2-poles version available only as complete circuit breaker with TMF, trip units interchangeable; 4-poles version available only as complete circuit breaker from In=80 to In=250 with TMF, trip units interchangeable
(3) With F, EF, ES, FCCuAl installation
(4) 100kA up to 150A, 65kA from 175A up to 250A

Motor protection (1)			XT1
Frame Size		[A]	125
Poles		[No.]	3
Rated service voltage	(AC) 50-60Hz	[V]	600Y/347
	(DC)	[V]	500
Versions			Fixed, Plug-in
Rating level			H
Trip units for motor protection			
MA (MCP)			■
Ekip M-LIU (MPCB)			–

(1) Available only as complete circuit breaker

Molded case disconnect switches (MCS)			XT1		
Frame Size		[A]	125		
Poles		[No.]	3, 4		
Rated voltage	(AC) 50-60Hz	[V]	600Y/347		
	(DC)	[V]	500 4p series / 3p CB up to 250V DC 2p series		
Versions			Fixed, Plug-in		
Rating level			N	S	H
Magnetic Override		[A]	1250		

Tmax XT ranges

Catalog number explanation

Tmax XT Part number explanation

XT	2	L	U	3	125	G	F	F	E	E	D	X	X	X
1,2	3	4	5	6	7,8,9	10	11	12	13	14	15	16	17	18

1,2 - Tmax XT prefix, XT

3 - Frame size	
1	XT1 - to 125A, 600Y/347V (UL)) - Thermal magnetic protection
2	XT2 - to 125A, 600V (UL) - Thermal magnetic and electronic protection
3	XT3 - to 225A, 600Y/347V (UL) - Thermal magnetic protection
4	XT4 - to 250A, 600V (UL) - Thermal magnetic and electronic protection

4 - Breaking Capacity	XT1	XT2	XT3	XT4
N	18kA @ 600Y/347Vac	18kA @ 600Vac	10kA @ 600Y/347Vac	18 @ 600Vac
S	22kA @ 600Y/347Vac	22kA @ 600Vac	10kA @ 600Y/347Vac	22 @ 600Vac
H	25kA @ 600Y/347Vac	25kA @ 600Vac	-	25 @ 600Vac
L	-	35kA @ 600Vac	-	50 @ 600Vac
V	-	42kA @ 600Vac	-	65 @ 600Vac
X	-	45kA @ 600Vac	-	100kA @ 600Vac (1)

(1) 100kA up to 150A. 65kA from 175A up to 250A

5 - Standard	
U	UL standard version
Q	UL 100% rated version

6 - Number of poles	
2	2 poles (XT4N UL version only)
3	3 poles
4	4 poles, 100% neutral

7,8,9 - Nominal current (amperage)

	XT1				XT2					XT3				XT4				
	TMF	Elect.	MCP (MA)	MCS	TMF/ TMA (1)	Elect.	MCP (MA)	Elect. LIU	MCS	TMF	MCP (MA)	Elect. LIU	MCS	TMF/ TMA (2)	Elect.	MCP (MA)	Elect. LIU	MCS
003	-	-	3A	-	-	-	3A	-	-	-	-	-	-	-	-	-	-	-
007	-	-	7A	-	-	-	7A	-	-	-	-	-	-	-	-	-	-	-
010	-	-	-	-	-	10A	-	-	-	-	-	-	-	-	-	-	-	-
015	15A	-	15A	-	15A	-	15A	-	-	-	-	-	-	-	-	-	-	-
020	20A	-	-	-	20A	-	-	-	-	-	-	-	-	-	-	-	-	-
025	25A	-	-	-	25A	25A	-	25A	-	-	-	-	-	25A	-	25A	-	-
030	30A	-	30A	-	30A	-	30A	-	-	-	-	-	-	30A	-	-	-	-
035	35A	-	-	-	35A	-	-	-	-	-	-	-	-	35A	-	-	-	-
040	40A	-	-	-	40A	-	-	-	-	-	-	-	-	40A	40A	-	40A	-
045	45A	-	-	-	-	-	-	-	-	-	-	-	-	-	-	-	-	-
050	50A	-	50A	-	50A	-	50A	-	-	-	-	-	-	50A	-	50A	-	-
060	60A	-	-	-	60A	60A	-	60A	-	60A	-	-	-	60A	60A	-	60A	-
070	70A	-	70A	-	70A	-	70A	-	-	70A	-	-	-	70A	-	-	-	-
080	80A	-	80A	-	80A	-	80A	-	-	80A	-	-	-	80A	-	80A	-	-
090	90A	-	-	-	90A	-	-	-	-	90A	-	-	-	90A	-	-	-	-
100	100A	-	100A	-	100A	100A	100A	100A	-	100A	100A	-	-	100A	100A	100A	100A	-
110	110A	-	-	-	110A	-	-	-	-	110A	110A	-	-	110A	-	110A	-	-
125	125A	-	125A	125A	125A	125A	125A	-	125A	125A	125A	-	-	125A	-	125A	-	-
150	-	-	-	-	-	-	-	-	-	150A	150A	-	-	150A	150A	150A	150A	-
175	-	-	-	-	-	-	-	-	-	175A	-	-	-	175A	-	175A	-	-
200	-	-	-	-	-	-	-	-	-	200A	200A	-	-	200A	-	200A	-	-
225	-	-	-	-	-	-	-	-	-	225A	-	-	225A	225A	225A	225A	-	-
250	-	-	-	-	-	-	-	-	-	-	-	-	-	250A	250A	250A	-	250A

(1) XT2 TMF FIXED treshold up to 70A, TMA adjustable for 80A and higher.

(2) XT4 2p version with TMF version only. XT4 3p TMF version up to 70A, TMA adjustable for 80A and higher. XT4 4p TMA version only

Tmax XT ranges

Catalog number explanation

10 - Trip unit	
A	Thermal magnetic fixed (TMF)
B	Thermal magnetic adjustable (TMD/TMA)
D	Molded case switch disconnector (MCS)
E	Ekip LS/I (Electronic, LS/I protection)
F	Ekip LSI (Electronic, LSI protection)
G	Ekip LSIG (Electronic, LSIG protection)
H	Ekip E-LSIG (Electronic, LSIG plus measurements)
J	Ekip I (Electronic, Instantaneous trip only)
L	Ekip M-LIU (Electronic Motor Protector with integrated overload and phase loss detection)
M	Motor circuit protector (MCP - magnetic only (MA)

11 - Line side termination (top)	
F	F Front terminals, no lugs installed
A	FC Cu Terminals for Cu cables (Saddle Clamps)
B	FC CuAl Terminals for CuAl cables, 14-1/0 AWG, 110A (UL XT2)(1)
G	FC CuAl Terminals for CuAl cables, 14-1/0 AWG, 100A (UL XT3, UL XT4)(2)
H	FC CuAl Terminals for CuAl cables, 14-1/0 AWG, 100A, Control Tap Included (UL XT3, UL XT4)(1)(2)
J	FC CuAl Terminals for CuAl cables, 4 AWG-300 kcmil, 225A (UL XT3, UL XT4)(2)
K	FC CuAl Terminals for CuAl cables, 4 AWG-300 kcmil, 225A, Control Tap Included (UL XT3, UL XT4)(1)(2)
L	FC CuAL Terminals for CuAl Cables, 250-350 kcmil, 250A (UL XT4)(1)(2)
Z	MC Multi-cable terminals for Cu (6 wire)
1	EF Extended front terminals
2	ES Extended spread terminals
3	FB Terminals for flexible busbar (IEC only)
4	R Rear terminals (IEC only)
5	Panel board Adapter(1)
6	Plug-in kit (Must also use 6 for load side)
7	Withdrawable kit - XT2 & XT4 only (Must also use 7 for the load side)

(1)Contact ABB for availability.
(2)Not available for XT4 X version to 150A.
Note: Additional terminal options are available as loose accessories for IEC versions. Please see the IEC catalog for more details.

12 - Load side termination (bottom)	
F	F Front terminals, no lugs installed
A	FC Cu Terminals for Cu cables (Saddle Clamps)
B	FC CuAl Terminals for CuAl cables, 14-1/0 AWG, 110A (UL XT2)(1)
G	FC CuAl Terminals for CuAl cables, 14-1/0 AWG, 100A (UL XT3, UL XT4)(2)
H	FC CuAl Terminals for CuAl cables, 14-1/0 AWG, 100A, Control Tap Included (UL XT3, UL XT4)(1)(2)
J	FC CuAl Terminals for CuAl cables, 4 AWG-300 kcmil, 225A (UL XT3, UL XT4)(2)
K	FC CuAl Terminals for CuAl cables, 4 AWG-300 kcmil, 225A, Control Tap Included (UL XT3, UL XT4)(1)(2)
L	FC CuAL Terminals for CuAl Cables, 250-350 kcmil, 250A (UL XT4)(1)(2)
Z	MC Multi-cable terminals for Cu (6 wire)
1	EF Extended front terminals
2	ES Extended spread terminals
3	FB Terminals for flexible busbar (IEC only)
4	R Rear terminals (IEC only)
6	Plug-in kit (Must also use 6 for line side)
7	Withdrawable kit - XT2 & XT4 only (Must also use 7 for the line side)

(1)Contact ABB for availability.
(2)Not available for XT4 X version to 150A.
Note: Additional terminal options are available as loose accessories for IEC versions. Please see the IEC catalog for more details.

Tmax XT ranges

Ordering details XT1

XT1 125A TMF - Fixed (F) - 3 poles - Front terminals (F) - UL/CSA

Thermal magnetic trip unit			IC Rating (600Y/347V)	N 18kA Part number	S 22kA Part number	H 25kA Part number
Type	In	I_3				
TMF	15	500		XT1NU3015AFF000XXX	XT1SU3015AFF000XXX	XT1HU3015AFF000XXX
	20	500		XT1NU3020AFF000XXX	XT1SU3020AFF000XXX	XT1HU3020AFF000XXX
	25	500		XT1NU3025AFF000XXX	XT1SU3025AFF000XXX	XT1HU3025AFF000XXX
	30	500		XT1NU3030AFF000XXX	XT1SU3030AFF000XXX	XT1HU3030AFF000XXX
	35	500		XT1NU3035AFF000XXX	XT1SU3035AFF000XXX	XT1HU3035AFF000XXX
	40	500		XT1NU3040AFF000XXX	XT1SU3040AFF000XXX	XT1HU3040AFF000XXX
	45	500		XT1NU3045AFF000XXX	XT1SU3045AFF000XXX	XT1HU3045AFF000XXX
	50	500		XT1NU3050AFF000XXX	XT1SU3050AFF000XXX	XT1HU3050AFF000XXX
	60	600		XT1NU3060AFF000XXX	XT1SU3060AFF000XXX	XT1HU3060AFF000XXX
	70	700		XT1NU3070AFF000XXX	XT1SU3070AFF000XXX	XT1HU3070AFF000XXX
	80	800		XT1NU3080AFF000XXX	XT1SU3080AFF000XXX	XT1HU3080AFF000XXX
	90	900		XT1NU3090AFF000XXX	XT1SU3090AFF000XXX	XT1HU3090AFF000XXX
	100	1000		XT1NU3100AFF000XXX	XT1SU3100AFF000XXX	XT1HU3100AFF000XXX
	110	1100		XT1NU3110AFF000XXX	XT1SU3110AFF000XXX	XT1HU3110AFF000XXX
	125	1250		XT1NU3125AFF000XXX	XT1SU3125AFF000XXX	XT1HU3125AFF000XXX

XT1 125A TMF - Fixed (F) - 3 poles - Front terminals (F) - 100% rated UL/CSA

Thermal magnetic trip unit			IC Rating (600Y/347V)	NQ 18kA Part number	SQ 22kA Part number	HQ 25kA Part number
Type	In	I_3				
TMF	15	500		XT1NQ3015AFF000XXX	XT1SQ3015AFF000XXX	XT1HQ3015AFF000XXX
	20	500		XT1NQ3020AFF000XXX	XT1SQ3020AFF000XXX	XT1HQ3020AFF000XXX
	25	500		XT1NQ3025AFF000XXX	XT1SQ3025AFF000XXX	XT1HQ3025AFF000XXX
	30	500		XT1NQ3030AFF000XXX	XT1SQ3030AFF000XXX	XT1HQ3030AFF000XXX
	35	500		XT1NQ3035AFF000XXX	XT1SQ3035AFF000XXX	XT1HQ3035AFF000XXX
	40	500		XT1NQ3040AFF000XXX	XT1SQ3040AFF000XXX	XT1HQ3040AFF000XXX
	45	500		XT1NQ3045AFF000XXX	XT1SQ3045AFF000XXX	XT1HQ3045AFF000XXX
	50	500		XT1NQ3050AFF000XXX	XT1SQ3050AFF000XXX	XT1HQ3050AFF000XXX
	60	600		XT1NQ3060AFF000XXX	XT1SQ3060AFF000XXX	XT1HQ3060AFF000XXX
	70	700		XT1NQ3070AFF000XXX	XT1SQ3070AFF000XXX	XT1HQ3070AFF000XXX
	80	800		XT1NQ3080AFF000XXX	XT1SQ3080AFF000XXX	XT1HQ3080AFF000XXX
	90	900		XT1NQ3090AFF000XXX	XT1SQ3090AFF000XXX	XT1HQ3090AFF000XXX
	100	1000		XT1NQ3100AFF000XXX	XT1SQ3100AFF000XXX	XT1HQ3100AFF000XXX

XT1 125A TMF - Fixed (F) - 4 poles - Front terminals (F) - UL/CSA

Thermal magnetic trip unit			IC Rating (600Y/347V)	N 18kA Part number	S 22kA Part number	H 25kA Part number
Type	In	I_3				
TMF	15	500		XT1NU4015AFF000XXX	XT1SU4015AFF000XXX	XT1HU4015AFF000XXX
	20	500		XT1NU4020AFF000XXX	XT1SU4020AFF000XXX	XT1HU4020AFF000XXX
	25	500		XT1NU4025AFF000XXX	XT1SU4025AFF000XXX	XT1HU4025AFF000XXX
	30	500		XT1NU4030AFF000XXX	XT1SU4030AFF000XXX	XT1HU4030AFF000XXX
	35	500		XT1NU4035AFF000XXX	XT1SU4035AFF000XXX	XT1HU4035AFF000XXX
	40	500		XT1NU4040AFF000XXX	XT1SU4040AFF000XXX	XT1HU4040AFF000XXX
	45	500		XT1NU4045AFF000XXX	XT1SU4045AFF000XXX	XT1HU4045AFF000XXX
	50	500		XT1NU4050AFF000XXX	XT1SU4050AFF000XXX	XT1HU4050AFF000XXX
	60	600		XT1NU4060AFF000XXX	XT1SU4060AFF000XXX	XT1HU4060AFF000XXX
	70	700		XT1NU4070AFF000XXX	XT1SU4070AFF000XXX	XT1HU4070AFF000XXX
	80	800		XT1NU4080AFF000XXX	XT1SU4080AFF000XXX	XT1HU4080AFF000XXX
	90	900		XT1NU4090AFF000XXX	XT1SU4090AFF000XXX	XT1HU4090AFF000XXX
	100	1000		XT1NU4100AFF000XXX	XT1SU4100AFF000XXX	XT1HU4100AFF000XXX
	110	1100		XT1NU4110AFF000XXX	XT1SU4110AFF000XXX	XT1HU4110AFF000XXX
	125	1250		XT1NU4125AFF000XXX	XT1SU4125AFF000XXX	XT1HU4125AFF000XXX

Tmax XT ranges

Introduction

There are the 4 new SACE Tmax XT UL/CSA frames:

– XT1 available up to 125A
– XT2 available up to 125A with 600Vac ratings
– XT3 available up to 225A
– XT4 available up to 250A with 600Vac ratings

600Y/347VAC, 480VAC

XT1 - 125A

XT3 - 225A

600VAC

XT2 - 125A

XT4 - 250A

Tmax XT ranges

Circuit breakers for power distribution

Molded case circuit breakers (MCCB)			XT1		
Frame Size		[A]	125		
Rated		80% rated	■		
		100% rated TM	up to 100A		
		100% rated Ekip	-		
Poles		[No.]	3, 4		
Rated voltage	(AC) 50-60Hz	[V]	600Y/347		
	(DC)	[V]	500		
Versions			Fixed, Plug-in		
Interrupting ratings			N	S	H
240 V (AC)		[kA]	50	65	100
480 V (AC)		[kA]	25	35	65
600Y/347 V (AC)		[kA]	18	22	25
600 V (AC)		[kA]	–	–	–
250 V (DC) 2 poles in series		[kA]	35	42	50
500 V (DC) 3 poles in series		[kA]	–	–	–
500 V (DC) 4 poles in series		[kA]	35	50	50
600 V (DC) 3 poles in series		[kA]	–	–	–
Mechanical life		[No. Operations]	25000		
		[No. Hourly operations]	240		
Dimensions - Fixed (Width x Depth x Height)	3 poles	[mm]/[in]	[76,2 x 70 x 130] / [3 x 2.75 x 5.12]		
	4 poles	[mm]/[in]	[101,6 x 70 x 130] / [4 x 2.75 x 5.12]		
Weight	Fixed 3/4 poles	[kg]/[lbs]	[1,1 - 2.43] / [1,4 - 3.07]		
	Plug-in (EF) 3/4 poles	[kg]/[lbs]	[2,21 - 4.87] / [2,82 - 6.22]		
	Withdrawable (EF) 3/4 poles	[kg]/[lbs]	–		
Total opening time	CB with SOR	[ms]	15		
	CB with UVR	[ms]	15		
Trip units for power distribution					
TMF			■		
TMA			–		
Ekip LS/I			–		
Ekip I			–		
Ekip LSI			–		
Ekip LSIG			–		
Ekip E-LSIG			–		
Interchangeable protection trip units			–		

(1) Current Limiting circuit breaker in 480V AC and 600V AC
(2) 2-poles version available only as complete circuit breaker with TMF, trip units interchangeable; 4-poles version available only as complete circuit breaker from In=80 to In=250 with TMF, trip units interchangeable
(3) With F, EF, ES, FCCuAl installation
(4) 100kA up to 150A, 65kA from 175A up to 250A

Motor protection (1)			XT1
Frame Size		[A]	125
Poles		[No.]	3
Rated service voltage	(AC) 50-60Hz	[V]	600Y/347
	(DC)	[V]	500
Versions			Fixed, Plug-in
Rating level			H
Trip units for motor protection			
MA (MCP)			■
Ekip M-LIU (MPCB)			–

(1) Available only as complete circuit breaker

Molded case disconnect switches (MCS)			XT1		
Frame Size		[A]	125		
Poles		[No.]	3, 4		
Rated voltage	(AC) 50-60Hz	[V]	600Y/347		
	(DC)	[V]	500 4p series / 3p CB up to 250V DC 2p series		
Versions			Fixed, Plug-in		
Rating level			N	S	H
Magnetic Override		[A]	1250		

Tmax XT ranges

Catalog number explanation

Tmax XT Part number explanation

XT	2	L	U	3	125	G	F	F	E	E	D	X	X	X
1,2	3	4	5	6	7,8,9	10	11	12	13	14	15	16	17	18

1,2 - Tmax XT prefix, XT

3 - Frame size

1	XT1 - to 125A, 600Y/347V (UL)) - Thermal magnetic protection
2	XT2 - to 125A, 600V (UL) - Thermal magnetic and electronic protection
3	XT3 - to 225A, 600Y/347V (UL) - Thermal magnetic protection
4	XT4 - to 250A, 600V (UL) - Thermal magnetic and electronic protection

4 - Breaking Capacity

	XT1	XT2	XT3	XT4
N	18kA @ 600Y/347Vac	18kA @ 600Vac	10kA @ 600Y/347Vac	18 @ 600Vac
S	22kA @ 600Y/347Vac	22kA @ 600Vac	10kA @ 600Y/347Vac	22 @ 600Vac
H	25kA @ 600Y/347Vac	25kA @ 600Vac	-	25 @ 600Vac
L	-	35kA @ 600Vac	-	50 @ 600Vac
V	-	42kA @ 600Vac	-	65 @ 600Vac
X	-	45kA @ 600Vac	-	100kA @ 600Vac (1)

(1) 100kA up to 150A. 65kA from 175A up to 250A

5 - Standard

U	UL standard version
Q	UL 100% rated version

6 - Number of poles

2	2 poles (XT4N UL version only)
3	3 poles
4	4 poles, 100% neutral

7,8,9 - Nominal current (amperage)

	XT1				XT2					XT3				XT4				
	TMF	Elect.	MCP (MA)	MCS	TMF/ TMA (1)	Elect.	MCP (MA)	Elect. LIU	MCS	TMF	MCP (MA)	Elect. LIU	MCS	TMF/ TMA (2)	Elect.	MCP (MA)	Elect. LIU	MCS
003	-	-	3A	-	-	-	3A	-	-	-	-	-	-	-	-	-	-	-
007	-	-	7A	-	-	-	7A	-	-	-	-	-	-	-	-	-	-	-
010	-	-	-	-	-	10A	-	-	-	-	-	-	-	-	-	-	-	-
015	15A	-	15A	-	15A	-	15A	-	-	-	-	-	-	-	-	-	-	-
020	20A	-	-	-	20A	-	-	-	-	-	-	-	-	-	-	-	-	-
025	25A	-	-	-	25A	25A	-	25A	-	-	-	-	-	25A	-	25A	-	-
030	30A	-	30A	-	30A	-	30A	-	-	-	-	-	-	30A	-	-	-	-
035	35A	-	-	-	35A	-	-	-	-	-	-	-	-	35A	-	-	-	-
040	40A	-	-	-	40A	-	-	-	-	-	-	-	-	40A	40A	-	40A	-
045	45A	-	-	-	-	-	-	-	-	-	-	-	-	-	-	-	-	-
050	50A	-	50A	-	50A	-	50A	-	-	-	-	-	-	50A	-	50A	-	-
060	60A	-	-	-	60A	60A	-	60A	-	60A	-	-	-	60A	60A	-	60A	-
070	70A	-	70A	-	70A	-	70A	-	-	70A	-	-	-	70A	-	-	-	-
080	80A	-	80A	-	80A	-	80A	-	-	80A	-	-	-	80A	-	80A	-	-
090	90A	-	-	-	90A	-	-	-	-	90A	-	-	-	90A	-	-	-	-
100	100A	-	100A	-	100A	100A	100A	100A	-	100A	100A	-	-	100A	100A	100A	100A	-
110	110A	-	-	-	110A	-	-	-	-	110A	110A	-	-	110A	-	110A	-	-
125	125A	-	125A	125A	125A	125A	125A	-	125A	125A	125A	-	-	125A	-	125A	-	-
150	-	-	-	-	-	-	-	-	-	150A	150A	-	-	150A	150A	150A	150A	-
175	-	-	-	-	-	-	-	-	-	175A	-	-	-	175A	-	175A	-	-
200	-	-	-	-	-	-	-	-	-	200A	200A	-	-	200A	-	200A	-	-
225	-	-	-	-	-	-	-	-	-	225A	-	-	225A	225A	225A	225A	-	-
250	-	-	-	-	-	-	-	-	-	-	-	-	-	250A	250A	250A	-	250A

(1) XT2 TMF FIXED treshold up to 70A, TMA adjustable for 80A and higher.

(2) XT4 2p version with TMF version only. XT4 3p TMF version up to 70A, TMA adjustable for 80A and higher. XT4 4p TMA version only

Tmax XT ranges

Catalog number explanation

10 - Trip unit	
A	Thermal magnetic fixed (TMF)
B	Thermal magnetic adjustable (TMD/TMA)
D	Molded case switch disconnector (MCS)
E	Ekip LS/I (Electronic, LS/I protection)
F	Ekip LSI (Electronic, LSI protection)
G	Ekip LSIG (Electronic, LSIG protection)
H	Ekip E-LSIG (Electronic, LSIG plus measurements)
J	Ekip I (Electronic, Instantaneous trip only)
L	Ekip M-LIU (Electronic Motor Protector with integrated overload and phase loss detection)
M	Motor circuit protector (MCP - magnetic only (MA)

11 - Line side termination (top)	
F	F Front terminals, no lugs installed
A	FC Cu Terminals for Cu cables (Saddle Clamps)
B	FC CuAl Terminals for CuAl cables, 14-1/0 AWG, 110A (UL XT2)(1)
G	FC CuAl Terminals for CuAl cables, 14-1/0 AWG, 100A (UL XT3, UL XT4)(2)
H	FC CuAl Terminals for CuAl cables, 14-1/0 AWG, 100A, Control Tap Included (UL XT3, UL XT4)(1)(2)
J	FC CuAl Terminals for CuAl cables, 4 AWG-300 kcmil, 225A (UL XT3, UL XT4)(2)
K	FC CuAl Terminals for CuAl cables, 4 AWG-300 kcmil, 225A, Control Tap Included (UL XT3, UL XT4)(1)(2)
L	FC CuAL Terminals for CuAl Cables, 250-350 kcmil, 250A (UL XT4)(1)(2)
Z	MC Multi-cable terminals for Cu (6 wire)
1	EF Extended front terminals
2	ES Extended spread terminals
3	FB Terminals for flexible busbar (IEC only)
4	R Rear terminals (IEC only)
5	Panel board Adapter(1)
6	Plug-in kit (Must also use 6 for load side)
7	Withdrawable kit - XT2 & XT4 only (Must also use 7 for the load side)

(1)Contact ABB for availability.
(2)Not available for XT4 X version to 150A.
Note: Additional terminal options are available as loose accessories for IEC versions. Please see the IEC catalog for more details.

12 - Load side termination (bottom)	
F	F Front terminals, no lugs installed
A	FC Cu Terminals for Cu cables (Saddle Clamps)
B	FC CuAl Terminals for CuAl cables, 14-1/0 AWG, 110A (UL XT2)(1)
G	FC CuAl Terminals for CuAl cables, 14-1/0 AWG, 100A (UL XT3, UL XT4)(2)
H	FC CuAl Terminals for CuAl cables, 14-1/0 AWG, 100A, Control Tap Included (UL XT3, UL XT4)(1)(2)
J	FC CuAl Terminals for CuAl cables, 4 AWG-300 kcmil, 225A (UL XT3, UL XT4)(2)
K	FC CuAl Terminals for CuAl cables, 4 AWG-300 kcmil, 225A, Control Tap Included (UL XT3, UL XT4)(1)(2)
L	FC CuAL Terminals for CuAl Cables, 250-350 kcmil, 250A (UL XT4)(1)(2)
Z	MC Multi-cable terminals for Cu (6 wire)
1	EF Extended front terminals
2	ES Extended spread terminals
3	FB Terminals for flexible busbar (IEC only)
4	R Rear terminals (IEC only)
6	Plug-in kit (Must also use 6 for line side)
7	Withdrawable kit - XT2 & XT4 only (Must also use 7 for the line side)

(1)Contact ABB for availability.
(2)Not available for XT4 X version to 150A.
Note: Additional terminal options are available as loose accessories for IEC versions. Please see the IEC catalog for more details.

Tmax XT ranges

Ordering details XT1

XT1 125A TMF - Fixed (F) - 3 poles - Front terminals (F) - UL/CSA

Thermal magnetic trip unit			IC Rating (600Y/347V)	N 18kA Part number	S 22kA Part number	H 25kA Part number
Type	In	I_3				
TMF	15	500		XT1NU3015AFF000XXX	XT1SU3015AFF000XXX	XT1HU3015AFF000XXX
	20	500		XT1NU3020AFF000XXX	XT1SU3020AFF000XXX	XT1HU3020AFF000XXX
	25	500		XT1NU3025AFF000XXX	XT1SU3025AFF000XXX	XT1HU3025AFF000XXX
	30	500		XT1NU3030AFF000XXX	XT1SU3030AFF000XXX	XT1HU3030AFF000XXX
	35	500		XT1NU3035AFF000XXX	XT1SU3035AFF000XXX	XT1HU3035AFF000XXX
	40	500		XT1NU3040AFF000XXX	XT1SU3040AFF000XXX	XT1HU3040AFF000XXX
	45	500		XT1NU3045AFF000XXX	XT1SU3045AFF000XXX	XT1HU3045AFF000XXX
	50	500		XT1NU3050AFF000XXX	XT1SU3050AFF000XXX	XT1HU3050AFF000XXX
	60	600		XT1NU3060AFF000XXX	XT1SU3060AFF000XXX	XT1HU3060AFF000XXX
	70	700		XT1NU3070AFF000XXX	XT1SU3070AFF000XXX	XT1HU3070AFF000XXX
	80	800		XT1NU3080AFF000XXX	XT1SU3080AFF000XXX	XT1HU3080AFF000XXX
	90	900		XT1NU3090AFF000XXX	XT1SU3090AFF000XXX	XT1HU3090AFF000XXX
	100	1000		XT1NU3100AFF000XXX	XT1SU3100AFF000XXX	XT1HU3100AFF000XXX
	110	1100		XT1NU3110AFF000XXX	XT1SU3110AFF000XXX	XT1HU3110AFF000XXX
	125	1250		XT1NU3125AFF000XXX	XT1SU3125AFF000XXX	XT1HU3125AFF000XXX

XT1 125A TMF - Fixed (F) - 3 poles - Front terminals (F) - 100% rated UL/CSA

Thermal magnetic trip unit			IC Rating (600Y/347V)	NQ 18kA Part number	SQ 22kA Part number	HQ 25kA Part number
Type	In	I_3				
TMF	15	500		XT1NQ3015AFF000XXX	XT1SQ3015AFF000XXX	XT1HQ3015AFF000XXX
	20	500		XT1NQ3020AFF000XXX	XT1SQ3020AFF000XXX	XT1HQ3020AFF000XXX
	25	500		XT1NQ3025AFF000XXX	XT1SQ3025AFF000XXX	XT1HQ3025AFF000XXX
	30	500		XT1NQ3030AFF000XXX	XT1SQ3030AFF000XXX	XT1HQ3030AFF000XXX
	35	500		XT1NQ3035AFF000XXX	XT1SQ3035AFF000XXX	XT1HQ3035AFF000XXX
	40	500		XT1NQ3040AFF000XXX	XT1SQ3040AFF000XXX	XT1HQ3040AFF000XXX
	45	500		XT1NQ3045AFF000XXX	XT1SQ3045AFF000XXX	XT1HQ3045AFF000XXX
	50	500		XT1NQ3050AFF000XXX	XT1SQ3050AFF000XXX	XT1HQ3050AFF000XXX
	60	600		XT1NQ3060AFF000XXX	XT1SQ3060AFF000XXX	XT1HQ3060AFF000XXX
	70	700		XT1NQ3070AFF000XXX	XT1SQ3070AFF000XXX	XT1HQ3070AFF000XXX
	80	800		XT1NQ3080AFF000XXX	XT1SQ3080AFF000XXX	XT1HQ3080AFF000XXX
	90	900		XT1NQ3090AFF000XXX	XT1SQ3090AFF000XXX	XT1HQ3090AFF000XXX
	100	1000		XT1NQ3100AFF000XXX	XT1SQ3100AFF000XXX	XT1HQ3100AFF000XXX

XT1 125A TMF - Fixed (F) - 4 poles - Front terminals (F) - UL/CSA

Thermal magnetic trip unit			IC Rating (600Y/347V)	N 18kA Part number	S 22kA Part number	H 25kA Part number
Type	In	I_3				
TMF	15	500		XT1NU4015AFF000XXX	XT1SU4015AFF000XXX	XT1HU4015AFF000XXX
	20	500		XT1NU4020AFF000XXX	XT1SU4020AFF000XXX	XT1HU4020AFF000XXX
	25	500		XT1NU4025AFF000XXX	XT1SU4025AFF000XXX	XT1HU4025AFF000XXX
	30	500		XT1NU4030AFF000XXX	XT1SU4030AFF000XXX	XT1HU4030AFF000XXX
	35	500		XT1NU4035AFF000XXX	XT1SU4035AFF000XXX	XT1HU4035AFF000XXX
	40	500		XT1NU4040AFF000XXX	XT1SU4040AFF000XXX	XT1HU4040AFF000XXX
	45	500		XT1NU4045AFF000XXX	XT1SU4045AFF000XXX	XT1HU4045AFF000XXX
	50	500		XT1NU4050AFF000XXX	XT1SU4050AFF000XXX	XT1HU4050AFF000XXX
	60	600		XT1NU4060AFF000XXX	XT1SU4060AFF000XXX	XT1HU4060AFF000XXX
	70	700		XT1NU4070AFF000XXX	XT1SU4070AFF000XXX	XT1HU4070AFF000XXX
	80	800		XT1NU4080AFF000XXX	XT1SU4080AFF000XXX	XT1HU4080AFF000XXX
	90	900		XT1NU4090AFF000XXX	XT1SU4090AFF000XXX	XT1HU4090AFF000XXX
	100	1000		XT1NU4100AFF000XXX	XT1SU4100AFF000XXX	XT1HU4100AFF000XXX
	110	1100		XT1NU4110AFF000XXX	XT1SU4110AFF000XXX	XT1HU4110AFF000XXX
	125	1250		XT1NU4125AFF000XXX	XT1SU4125AFF000XXX	XT1HU4125AFF000XXX

EF terminal

FCCu terminal

Front extended spread terminal - ES

Multi-cable terminals (MC)

Terminals

Type	XT1				XT2			
	3pcs	4pcs	6pcs	8pcs	3pcs	4pcs	6pcs	8pcs
	Catalog number	Catalog number	Catalog number	Catalog number	Catalog number	Catalog number	Catalog number	Catalog number
F Front terminals	KXT1F-3PC	KXT1F-4PC	KXT1F-6PC	KXT1F-8PC	KXT2F-3PC	KXT2F-4PC	KXT2F-6PC	KXT2F-8PC
F Front terminals for MCP	KXT1F3PCMCP	–	KXT1F6PCMCP	–	–	–	–	–
EF Extended front terminals	KXT1EF-3PC	KXT1EF-4PC	KXT1EF-6PC	KXT1EF-8PC	KXT2EF-3PC	KXT2EF-4PC	KXT2EF-6PC	KXT2EF-8PC
ES Extended spread terminals	KXT1ES-3PC	KXT1ES-4PC	KXT1ES-6PC	KXT1ES-8PC	KXT2ES-3PC	KXT2ES-4PC	KXT2ES-6PC	KXT2ES-8PC
FC CuAl Terminals for CuAl cables 100A, 14-1/0 AWG, 1x2.5…50mm[2][2][4]	–	–	–	–	–	–	–	–
FC CuAl Terminals for CuAl cables w/control tap 100A, 14-1/0 AWG, 1x2.5…50mm[2][2][4]	–	–	–	–	–	–	–	–
FC CuAl Terminals for CuAl cables 110A, 14-1/0 AWG, 1x2.5…50mm[2][2][4]	–	–	–	–	KXT2CUAL1-3PC	KXT2CUAL1-4PC	KXT2CUAL1-6PC	KXT2CUAL1-8PC
FC CuAl Terminals for CuAl cables 225A, 4 AWG-300 kcmil, 1x35…150mm[2][2][4]	–	–	–	–	–	–	–	–
FC CuAl Terminals for CuAl cables w/control tap 225A, 4 AWG-300 kcmil, 1x35…150mm[2][2][4]	–	–	–	–	–	–	–	–
FC CuAl Terminals for CuAl cables 250A, 250-350 kcmil, 1x120…185mm[2][2][4]	–	–	–	–	–	–	–	–
FC Cu Terminals for Cu cables 125A, 14-1/0 AWG, 1x2.5…50mm[2]	KXT1CU-3PC	KXT1CU-4PC	KXT1CU-6PC	KXT1CU-8PC	–	–	–	–
FC Cu Terminals for Cu cables MCP, 14-1/0 AWG, 1x1.5…50mm[2]	KXT1CUMCP-3PC	KXT1CUMCP-4PC	KXT1CUMCP-6PC	KXT1CUMCP-8PC	–	–	–	–
FC Cu Terminals for Cu cables 125A, 14-1/0 AWG, 1x2.5…95mm[2]	–	–	---	–	KXT2CU-3PC	KXT2CU-4PC	KXT2CU-6PC	KXT2CU-8PC
FC Cu Terminals for Cu cables 10-250 AWG, 1x6…185mm[2]	–	–	–	–	–	–	–	–
FC Cu Terminals for Cu cables, XT4X to 150A, 14-1/0 AWG, 1x2.5…50mm[2][3]	–	–	–	–	–	–	–	–
MC Multi cable terminals for Cu cables, 6x14-2 AWG, 6x2.5…35mm[2]	KXT1MC-3PC	KXT1MC-4PC	KXT1MC-6PC	KXT1MC-8PC	KXT2MC-3PC	KXT2MC-4PC	KXT2MC-6PC	KXT2MC-8PC
MC Multi cable terminals for Cu cables, 6x12-2 AWG, 6x2.5…35mm[2]	–	–	–	–	–	–	–	–
R Rear adjustable terminals[1]	KXT1ER-3PC	KXT1ER-4PC	KXT1ER-6PC	KXT1ER-8PC	KXT2ER-3PC	KXT2ER-4PC	KXT2ER-6PC	KXT2ER-8PC
R-RC Rear terminals for residual current[1]	–	KXT1ERRC-4PC	–	–	–	–	–	–
FB Flexibar Terminals[1]	KXT1EFB-3PC	KXT1EFB-4PC	KXT1EFB-6PC	KXT1EFB-8PC	KXT2EFB-3PC	KXT2EFB-4PC	KXT2EFB-6PC	KXT2EFB-8PC

Type	XT3				XT4			
	3pcs	4pcs	6pcs	8pcs	3pcs	4pcs	6pcs	8pcs
	Catalog number	Catalog number	Catalog number	Catalog number	Catalog number	Catalog number	Catalog number	Catalog number
F Front terminals	KXT3F-3PC	KXT3F-4PC	KXT3F-6PC	KXT3F-8PC	KXT4F-3PC	KXT4F-4PC	KXT4F-6PC	KXT4F-8PC
F Front terminals for MCP	–	–	–	–	–	–	–	–
EF Extended front terminals	KXT3EF-3PC	KXT3EF-4PC	KXT3EF-6PC	KXT3EF-8PC	KXT4EF-3PC	KXT4EF-4PC	KXT4EF-6PC	KXT4EF-8PC
ES Extended spread terminals	KXT3ES-3PC	KXT3ES-4PC	KXT3ES-6PC	KXT3ES-8PC	KXT4ES-3PC	KXT4ES-4PC	KXT4ES-6PC	KXT4ES-8PC
FC CuAl Terminals for CuAl cables 100A, 14-1/0 AWG, 1x2.5…50mm[2][4]	KXT3CUAL1-3PC	KXT3CUAL1-4PC	KXT3CUAL1-6PC	KXT3CUAL1-8PC	KXT4CUAL1-3PC	KXT4CUAL1-4PC	KXT4CUAL1-6PC	KXT4CUAL1-8PC
FC CuAl Terminals for CuAl cables w/control tap 100A, 14-1/0 AWG, 1x2.5…50mm[2][4]	KXT3CUAL1C-3PC	KXT3CUAL1C-4PC	–	–	KXT4CUAL1C-3PC	KXT4CUAL1C-4PC	–	–
FC CuAl Terminals for CuAl cables 110A, 14-1/0 AWG, 1x2.5…50mm[2][4]	–	–	–	–	–	–	–	–
FC CuAl Terminals for CuAl cables 225A, 4 AWG-300 kcmil, 1x35…150mm[2][4]	KXT3CUAL2-3PC	KXT3CUAL2-4PC	KXT3CUAL2-6PC	KXT3CUAL2-8PC	KXT4CUAL2-3PC	KXT4CUAL2-4PC	KXT4CUAL2-6PC	KXT4CUAL2-8PC
FC CuAl Terminals for CuAl cables w/control tap 225A, 4 AWG-300 kcmil, 1x35…150mm[2][4]	KXT3CUAL2C-3PC	KXT3CUAL2C-4PC	–	–	KXT4CUAL2C-3PC	KXT4CUAL2C-4PC	–	–
FC CuAl Terminals for CuAl cables 250A, 250-350 kcmil, 1x120…185mm[2][4]	–	–	–	–	KXT4CUAL3-3PC	KXT4CUAL3-4PC	KXT4CUAL3-6PC	KXT4CUAL3-8PC
FC Cu Terminals for Cu cables 125A, 14-1/0 AWG, 1x2.5…50mm[2]	–	–	–	–	–	–	–	–
FC Cu Terminals for Cu cables MCP, 14-1/0 AWG, 1x1.5…50mm[2]	–	–	–	–	–	–	–	–
FC Cu Terminals for Cu cables 125A, 14-1/0 AWG, 1x2.5…95mm[2]	–	–	–	–	–	–	–	–
FC Cu Terminals for Cu cables 250A, 10-250 AWG, 1x6…185mm[2]	KXT3CU-3PC	KXT3CU-4PC	KXT3CU-6PC	KXT3CU-8PC	KXT4CU-3PC	KXT4CU-4PC	KXT4CU-6PC	KXT4CU-8PC
FC Cu Terminals for Cu cables, XT4X to 150A, 14-1/0 AWG, 1x2.5…50mm[2][3]	–	–	–	–	KXT4XCU-3PC	KXT4XCU-4PC	–	–
MC Multi cable terminals for Cu cables, 6x14-2 AWG, 6x2.5…35mm[2]	–	–	–	–	–	–	–	–
MC Multi cable terminals for Cu cables, 6x12-2 AWG, 6x2.5…35mm[2]	KXT3MC-3PC	KXT3MC-4PC	KXT3MC-6PC	KXT3MC-8PC	KXT4MC-3PC	KXT4MC-4PC	KXT4MC-6PC	KXT4MC-8PC
R Rear adjustable terminals[1]	KXT3ER-3PC	KXT3ER-4PC	KXT3ER-6PC	KXT3ER-8PC	KXT4ER-3PC	KXT4ER-4PC	KXT4ER-6PC	KXT4ER-8PC
R-RC Rear terminals for residual current[1]	–	KXT3ERRC-4PC	–	–	–	–	–	–
FB Flexibar Terminals[1]	KXT3EFB-3PC	KXT3EFB-4PC	KXT3EFB-6PC	KXT3EFB-8PC	KXT4EFB-3PC	KXT4EFB-4PC	KXT4EFB-6PC	KXT4EFB-8PC

[1] IEC rated only.

[2] Consult ABB for availability.

[3] For use with the XT4 X version up to 150A only. Note: XT4 X from 175-250A uses the standard 250A CU lug.

[4] Not available for XT4 X up to 150A.

7

Main accessories
MS5100, MO5100 manual motor starters

AUX-C

SOR-C

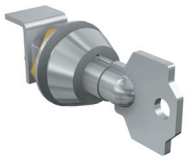

KLC Ronis

Description

Manual motor starters can be equipped with auxiliary contacts, undervoltage release and shunt trips. Undervoltage release are used for remote tripping of the manual motor starter especially for emergency stop circuits. Shunt trips release the MMS used for remote tripping.

For this manual motor starter range we also offer key lock solutions for customer applications.

Ordering details

Suitable for	Auxiliary contacts N.O.	Auxiliary contacts N.C.	Description	Type	Order code		Pkg qty pcs	Weight (1 pc) kg
Auxiliary contacts - mountable inside the breaker on the left slot (cabled version)								
MS5100, MO5100			Changeover	**AUX-C 1Q+1SY 250V AC**	KXTAAXCQSYFP		2	0.06
			Changeover	**AUX-C 2Q+1SY 250V AC**	KXTAAXC2QSYFP		3	0.09
MS5100			Changeover	**AUX-C 2Q+2SY+1SA 250V AC**	KXTCAXC2Q2SYS51FP		5	0.15
			Changeover	**AUX-C 3Q+1SY 250V AC**	KXTDAXC3QSYFP		4	0.12
			Changeover	**AUX-C 3Q+2SY 250V AC**	KXTCAXC3Q2SYFP		5	0.15
MO5100			Changeover	**AUX-C 1Q+1SY 24V DC**	KXTAAXCDQSYFP		2	0.06

Suitable for	Rated control supply voltage V	Description	Type	Order code		Pkg qty pcs	Weight (1 pc) kg
Shunt trips units - mountable inside the breaker on the left slot (cabled version)							
MS5100, MO5100		Normally NON energized	**SOR-C 12V DC**	KXTASORCFPA		1	0.14
		Normally NON energized	**SOR-C 24-30V AC/DC**	KXTASORCFPB		1	0.14
		Normally NON energized	**SOR-C 48-60V AC/DC**	KXTASORCFPC		1	0.14
		Normally NON energized	**SOR-C 110-127V AC / 110-125V DC**	KXTASORCFPD		1	0.14
		Normally NON energized	**SOR-C 220-240V AC / 220-250V DC**	KXTASORCFPE		1	0.14
		Normally NON energized	**SOR-C 380-440V AC**	KXTASORCFPF		1	0.14
		Normally NON energized	**SOR-C 480-525V AC**	KXTASORCFPG		1	0.14
Undervoltages releases - mountable inside the breaker on the left slot (cabled version)							
MS5100, MO5100		Normally energized	**UVR-C 24-30V AC/DC**	KXTAUVRCFP1		1	0.14
		Normally energized	**UVR-C 48V AC/DC**	KXTAUVRCFP2		1	0.14
		Normally energized	**UVR-C 60V AC/DC**	KXTAUVRCFP3		1	0.14
		Normally energized	**UVR-C 110-127V AC / 110-125V DC**	KXTAUVRCFP4		1	0.14
		Normally energized	**UVR-C 220-240V AC / 220-250V DC**	KXTAUVRCFP5		1	0.14
		Normally energized	**UVR-C 380-440V AC**	KXTAUVRCFP6		1	0.14
		Normally energized	**UVR-C 480-525V AC**	KXTAUVRCFP7		1	0.14

Suitable for	Description	Type	Order code		Pkg qty pcs	Weight (1 pc) kg
Key locks						
MS5100	Key lock on the circuit breaker, different keys, removable in open position	**KLC Ronis**	KXTCKLCCBDIF		1	NA
MO5100	Key lock on the circuit breaker, different keys, removable in open position	**KLC Ronis**	KXT1KLCCBDIF		1	NA

PDC Item 42
Standard Pistol Handle - ABB OHB65L10B / Trojan P/N 912787-410 Page 1/1

Rotary handle operating mechanisms

Direct rotary handle

Extended rotary handle

Rotary handle operating mechanism

Type	Part number			
RHD Standard Direct Handle	KXTBRHDSTFP			
RHD Emergency Direct Handle	KXTBRHDEMFP			
RHE Standard Extended Handle	KXTBRHESTFP			
RHE Emergency Extended Handle	KXTBRHEEMFP			
RHE Standard Extended Handle with Padlock[1]	KXTBRHESTFPPLK			
RHE Emergency Extended Handle with Padlock[1]	KXTBRHEEMFPPLK			
RHS-L Standard Left Side Handle	KXTBRHSLSTFP			
RHS-L Emergency Left Side Handle	KXTBRHSLEMFP			
RHS-R Standard Right Side Handle	KXTBRHSRSTFP			
RHS-R Emergency Right Side Handle	KXTBRHSREMFP			
Extended handle spare parts				
RHE_B Base for Extended Handle	KXTBRHEBFP			
RHE_B Base for Extended Handle with Padlock[1]	KXTBRHEBFPPLK			
RHE_S 500mm Shaft	KXTARHES500			
RHE_H Standard Extended Handle	KXTARHEHST			
RHE_H Emergency Extended Handle	KXTARHEHEM			
LH Standard Large Handle, NEMA 1	KXTALHNDLST			
LH Emergency Large Handle, NEMA 1	KXTALHNDLEM			
Standard Pistol Handle with reset function, 65mm, NEMA 3R,12	OHB65J10B			
Emergency Pistol Handle with reset function, 65mm, NEMA 3R,12[1]	OHY65J10B			
Standard Pistol Handle with reset function, 65mm, NEMA 4,4X[1]	OHB65L10B			
Emergency Pistol Handle with reset function, 65mm, NEMA 4, 4X[1]	OHY65L10B			
Standard Pistol Handle with reset function, 125mm, NEMA 3R,12	OHB125J10B			
Emergency Pistol Handle with reset function, 125mm, NEMA 3R,12[1]	OHY125J10B			
Standard Pistol Handle with reset function, 125mm, NEMA 4,4X[1]	OHB125L10B			
Emergency Pistol Handle with reset function, 125mm, NEMA 4, 4X[1]	OHY125L10B			
148mm Pistol Handle Shaft	OXP10X148			
225mm Pistol Handle Shaft	OXP10X225			
500mm Pistol Handle Shaft	OXP10X500			

[1]Consult ABB for availability.

IP54

IP54 protection for transmitted rotary handle[1]

Type	Part number			
IP54 protection for transmitted handle -RHE	KXTAERHEIP54			

[1]IEC rated only.

Flange handle[1]

Type	Part number			
Flange Handle + Mechanism + 4ft Cable (NEMA 1, 3R, 12, 4)	KXT1N12FLHDL4			
Flange Handle + Mechanism + 6ft Cable (NEMA 1, 3R, 12, 4)	KXT1N12FLHDL6			
Flange Handle + Mechanism + 10ft Cable (NEMA 1, 3R, 12, 4)	KXT1N12FLHDL10			
Flange Handle + Mechanism + 4ft Cable (NEMA 1, 3R, 12, 4, 4X)	KXT1N4FLHDL4			
Flange Handle + Mechanism + 6ft Cable (NEMA 1, 3R, 12, 4, 4X)	KXT1N4FLHDL6			
Flange Handle + Mechanism + 10ft Cable (NEMA 1, 3R, 12, 4, 4X)	KXT1N4FLHDL10			
Flange Handle Spare Parts				
Flange Handle only (NEMA 1, 3R, 12, 4)	KXTAN12FLHDL			
Flange Handle only (NEMA 1, 3R, 12, 4, 4X)	KXTAN4XFLHDL			
Flange Handle Hardware	KXTAFLHDLHW			
Flange Mounting Hardware	KXTBFLMTHW			

[1]Consult ABB for availability.

7

OXP10X500

PDC Item 41
500mm Pistol Handle Shaft / ABB OXP10X500
Trojan P/N 912786-10X500 Page 1/1

General Information

Extended Product Type:	OXP10X500
Product ID:	1SCA022505R5050
EAN:	6417019169262
Catalog Description:	Shaft OXP10X500
Long Description:	Shaft diameter 10 mm.

Categories

Products » Low Voltage Products and Systems » Switches » Switch Disconnectors Accessories

Ordering

EAN:	6417019169262
Minimum Order Quantity:	1 piece
Customs Tariff Number:	85389099

Dimensions

Product Net Width:	10 mm
Product Net Height:	10 mm
Product Net Depth:	500 mm
Product Net Weight:	0.4 kg

Container Information

Package Level 1 Units:	1 piece
Package Level 1 Width:	10 mm
Package Level 1 Height:	10 mm
Package Level 1 Length:	500 mm
Package Level 1 Gross Weight:	0.4 kg
Package Level 1 EAN:	6417019169262

Environmental

RoHS Status:	Planned to follow EU Directive 2002/95/EC August 18, 2005 and amendment after 2009 Q4

Additional Information

IIT Publishing Status:	Level 0 - Information enabled
Order Multiple:	1 piece
Product Main Type:	OXP10
Product Name:	SHAFT
Product Type:	OXP
Shaft Diameter:	10 mm
Shaft Length:	500 mm
Suitable For:	MCCB
Suitable for Product Class:	MCCB

Certificates and Declarations (Document Number)

Data Sheet, Technical Information:	1SCC301020C0201

Classifications

ETIM 5:	EC000916 - Axle for switch
Object Classification Code:	N/A

PDC Item 40
RHE B Base for Extended Handle - ABB KXTBRHEBFP / Trojan P/N 916814-KXTBRHE Page1/1

Rotary handle operating mechanisms

Direct rotary handle

Extended rotary handle

Rotary handle operating mechanism

Type	Part number			
RHD Standard Direct Handle	KXTBRHDSTFP			
RHD Emergency Direct Handle	KXTBRHDEMFP			
RHE Standard Extended Handle	KXTBRHESTFP			
RHE Emergency Extended Handle	KXTBRHEEMFP			
RHE Standard Extended Handle with Padlock[1]	KXTBRHESTFPPLK			
RHE Emergency Extended Handle with Padlock[1]	KXTBRHEEMFPPLK			
RHS-L Standard Left Side Handle	KXTBRHSLSTFP			
RHS-L Emergency Left Side Handle	KXTBRHSLEMFP			
RHS-R Standard Right Side Handle	KXTBRHSRSTFP			
RHS-R Emergency Right Side Handle	KXTBRHSREMFP			
Extended handle spare parts				
RHE_B Base for Extended Handle	KXTBRHEBFP			
RHE_B Base for Extended Handle with Padlock[1]	KXTBRHEBFPPLK			
RHE_S 500mm Shaft	KXTARHES500			
RHE_H Standard Extended Handle	KXTARHEHST			
RHE_H Emergency Extended Handle	KXTARHEHEM			
LH Standard Large Handle, NEMA 1	KXTALHNDLST			
LH Emergency Large Handle, NEMA 1	KXTALHNDLEM			
Standard Pistol Handle with reset function, 65mm, NEMA 3R,12	OHB65J10B			
Emergency Pistol Handle with reset function, 65mm, NEMA 3R,12[1]	OHY65J10B			
Standard Pistol Handle with reset function, 65mm, NEMA 4,4X[1]	OHB65L10B			
Emergency Pistol Handle with reset function, 65mm, NEMA 4, 4X[1]	OHY65L10B			
Standard Pistol Handle with reset function, 125mm, NEMA 3R,12	OHB125J10B			
Emergency Pistol Handle with reset function, 125mm, NEMA 3R,12[1]	OHY125J10B			
Standard Pistol Handle with reset function, 125mm, NEMA 4,4X[1]	OHB125L10B			
Emergency Pistol Handle with reset function, 125mm, NEMA 4, 4X[1]	OHY125L10B			
148mm Pistol Handle Shaft	OXP10X148			
225mm Pistol Handle Shaft	OXP10X225			
500mm Pistol Handle Shaft	OXP10X500			

[1]Consult ABB for availability.

IP54

IP54 protection for transmitted rotary handle[1]

Type	Part number			
IP54 protection for transmitted handle -RHE	KXTAERHEIP54			

[1]IEC rated only.

Flange handle[1]

Type	Part number			
Flange Handle + Mechanism + 4ft Cable (NEMA 1, 3R, 12, 4)	KXT1N12FLHDL4			
Flange Handle + Mechanism + 6ft Cable (NEMA 1, 3R, 12, 4)	KXT1N12FLHDL6			
Flange Handle + Mechanism + 10ft Cable (NEMA 1, 3R, 12, 4)	KXT1N12FLHDL10			
Flange Handle + Mechanism + 4ft Cable (NEMA 1, 3R, 12, 4, 4X)	KXT1N4FLHDL4			
Flange Handle + Mechanism + 6ft Cable (NEMA 1, 3R, 12, 4, 4X)	KXT1N4FLHDL6			
Flange Handle + Mechanism + 10ft Cable (NEMA 1, 3R, 12, 4, 4X)	KXT1N4FLHDL10			
Flange Handle Spare Parts				
Flange Handle only (NEMA 1, 3R, 12, 4)	KXTAN12FLHDL			
Flange Handle only (NEMA 1, 3R, 12, 4, 4X)	KXTAN4XFLHDL			
Flange Handle Hardware	KXTAFLHDLHW			
Flange Mounting Hardware	KXTBFLMTHW			

[1]Consult ABB for availability.

7

Tmax XT ranges

XT1 Accessories

RC Inst / RC Sel

Residual current devices

Residual current devices[1]

Type	3p Part number	4p Part number
RC Sel Low 200mm	-	KXT1ERCSEL200-4
RC Inst	KXT1ERCINST-3	KXT1ERCINST-4
RC Sel	KXT1ERCSEL-3	KXT1ERCSEL-4

[1]IEC rated only.

Panel type residual current relay[1]

Type	Part number
RCQ020/A 115-230V AC	KXTAERCQ230
RCQ020/A 415V AC	KXTAERCQ415
Toroid closed Ø 60mm	KXTTETOR60
Toroid closed Ø 110mm	KXTTETOR110
Toroid closed Ø 185mm	KXTTETOR185

[1]IEC rated only.

DIN guide

Installation

Bracket for mounting onto DIN rail[1]

Type	3p Part number	4p Part number
KIT DIN50022	KXT1EDIN-3	KXT1EDIN-4
KIT DIN50022 XT1 + RC Low 200mm	-	KXT1EDINRCSELPL
KIT DIN50022 XT1 + RC Sel/RC INst	KXT1EDINRCPL	KXT1EDINRCPL

[1]IEC rated only.

Terminal covers

Terminals, terminal covers and phase barriers

Insulating terminal covers

Type	3p Part number	4p Part number
LTC low terminal covers	KXT1LTC-3	KXT1LTC-4
HTC high terminal covers	KXT1HTC-3	KXT1HTC-4

Sealable screw

Sealable screws for terminal covers[1]

Type	Part number
Kit with two sealable screws	KXTAESSEAL

[1]IEC rated only.

Phase barriers

Phase barriers

Type	4pcs Part number	6pcs Part number
PB height 25mm/0.98in	KXTBPB25-3	KXTBPB25-4
PB height 100mm/3.94in	KXTBPB100-3	KXTBPB100-4
PB height 200mm/7.87in	KXTBPB200-3	KXTBPB200-4

DBL175 distribution terminal blocks
Single pole - 46.2 mm *1.81 in* spacing

DBL175

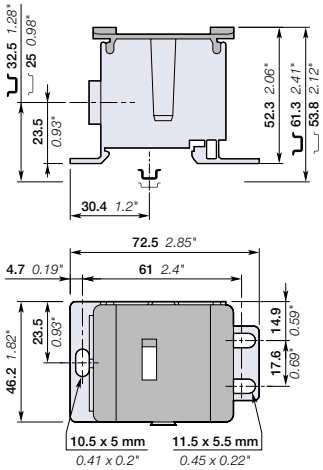

46.2 mm *1.81 in* spacing

Description

- Save installation time with our modular solutions,
- Ease the installation with plate or rail mounting options on our modular blocks,
- Easily increase the number of outputs using jumpers.

Ordering details

Description		Color	Type	Order code		Pkg qty	Weight (1 pce) g
Feed-through	Single pole distribution, 12 connections	Grey ☐	DBL175	1SNL317510R0000		1	200

Main technical data

Connecting capacity		IEC	UL	Connection type	Cross section	
Max current / Max cross section	Copper	175 A / 70 mm²	*175 A / 2/0 AWG*	2 x Ø 11.8 mm	10 ... 50 mm²	10 ... 70 mm²
	Aluminium	135 A / 70 mm²			*8 ... 1/0 AWG*	*6 ... 2/0 AWG*
Rated voltage		1000 V AC / 1500 V DC	*1000 V*	10x Ø 6.5 mm	2.5 ... 16 mm²	2.5 ... 16 mm²
Rated impulse voltage					*14 ... 6 AWG*	*14 ... 6 AWG*
Short-time withstand current (Icw 1s)		11000 A				
Short Circuit Current Rating (SCCR)			*100 kA*			
Rated peak withstand current (Ipk)		30 kA				
Protection		IP10	*NEMA 1*			

The connecting capacity data for one Rigid - Solid / Stranded - Flexible conductor (when applicable) is a mandatory information required by IEC, UL and CSA standards (Copper conductors). All other data are provided as supplementary information only. For more details, please consult our CB, UL or CSA certificates and technical datasheet available on http://www.ABB.com

CE RoHS USR EAC

Mounting instructions

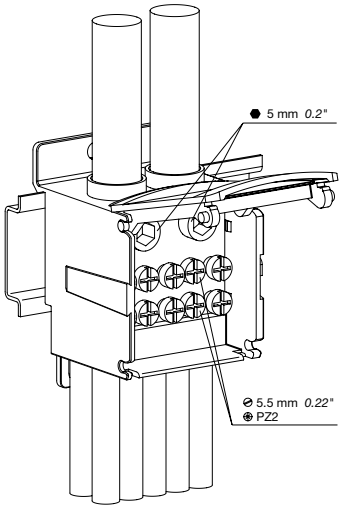

Rail		TH 35-7.5, TH 35-15			
Tool	**Diameter of cable Ø**		**Wire stripping length**		**Recommended torque**	
Allen key						
5 mm	*0.20 in*	11.8 mm	*0.46 in*	15 mm	*0.708 in*	6... 10 Nm	*53 ... 88 lb.in*
Posidriv - flat screwdriver						
5.5 mm	*0.22 in*	6.5 mm	*0.26 in*	11 mm	*0.43 in*	2 ... 3 Nm	*18 ... 26.5 lb.in*

Accessories

	Description			Color	Type	Order code		Pkg qty	Weight (1 pce) g
1	**End stops**	10 mm	*0.394 in*	Grey ☐	BAM2	1SNA206351R1600		50	12.00
		9 mm	*0.354 in*		BADL	1SNA399903R0200		50	4.70
		12 mm	*0.472 in*		BADH	1SNA116900R2700		50	20.00
2	**Terminal block markers**	Pre-printed marker card		White ☐	MC512PA	1SNK149002R0000		1	10.00
		Blank card			MC512	1SNK140000R0000		22	9.00

Complete list of accessories is indicated in the terminal block datasheet including end stops.
Some accessories such as jumper bars may modify the terminal block's ratings: Complete information available in the accessories section of the catalog.

1SNC166015S0201

Stranded conductor – Flexible with insulated ferrule – Rigid conductor

All the technical data for UL/CSA standard and dimensions in inches are in italic.

PDC Item 31
Ground Bar, 12 Tap 6-14AWG - ILSCO D167-10 / Trojan P/N 916079-012 Page 1/1

About Us
Products
New Products
OEM Custom Parts
Request a Catalog
Reference
ILSCO Product Catalog

D167 GROUND BARS

Home > ILSCO Product Catalog > Grounding > Neutral/Ground Bars > D167 GROUND BARS

- Manufactured from high strength copper tubing.
- Outlets are numbered and are clearly marked on the bar.
- Range Taking.
- UL Recognized and CSA Certified for 2,000 Volts.
- For Copper Conductor only.
- UL File E6207

Items Per Page 20 Compare

Compare	Item ID	Number of Taps	Conductor Range Tap	Conductor Range Main	Length	Width	Height	Mounting Hole Tapped Size	Mounting Hole Position	Standard Package Quantity	NAED/UPC Number
☐	D167-4	4	6-14 AWG	4-14 AWG	2.7500	0.3438	0.7500	13/64	1 & 6	20	0783669160925
☐	D167-6	6	6-14 AWG	4-14 AWG	3.5000	0.3438	0.7500	13/64	2 & 7	20	0783669161052
☐	D167-8	8	6-14 AWG	4-14 AWG	4.4375	0.3438	0.7500	13/64	4 & 9	20	0783669161212
☐	D167-10	10	6-14 AWG	4-14 AWG	5.1250	0.3438	0.7500	13/64	4 & 9	20	0783669161564
☐	D167-12	12	6-14 AWG	4-14 AWG	5.9375	0.3438	0.7500	13/64	5 & 10	20	0783669161724
☐	D167-14	14	6-14 AWG	4-14 AWG	6.7188	0.3438	0.7500	13/64	7 & 12	20	0783669161991

Contact Us Privacy Policy
©1991-2013 CDI Technology All Rights Reserved

ILSCO
4730 MADISON ROAD
CINCINNATI, OH 45227
513-533-6200
800-776-9775

Multiple Cable Sealing Bushing for Metric SKINTOP® Cable Glands

SKINTOP® DIX is a multiple hole sealing bushing designed to allow several cables to be inserted through one cable gland. This results in a reduction of space and cost, as a separate cable gland is not required for each cable.

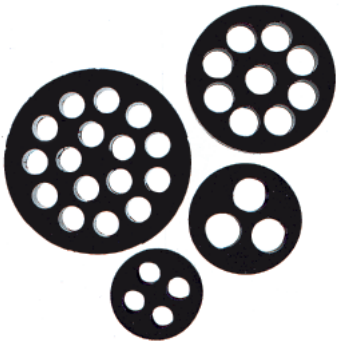

Technical Data:

Materials: NBR (Rubber)

Temperature: -40°C to +100°C

Seal: IP 54
IP 68 when all holes are optimally filled.

Special shapes available on request. Consult factory for details

Part Number	Thread Type & Size	# of Holes	Size of Holes inches	Size of Holes mm	Standard Pack Size
53316220	M-16	2	.079	2.0	100
53316230	M-16	2	.118	3.0	100
53316240	M-16	2	.157	4.0	100
53320250	M-20	2	.197	5.0	100
53320260	M-20	2	.236	6.0	100
53320340	M-20	3	.157	4.0	100
53320353	M-20	3	.209	5.3	100
53320440	M-20	4	.157	4.0	100
53320920	M-20	9	.079	2.0	100
53320430	M-20	4	.118	3.0	100
53325260	M-25	2	.236	6.0	50
53325350	M-25	3	.197	5.0	50
53325360	M-25	3	.236	6.0	50
53325370	M-25	3	.276	7.0	50
53325450	M-25	4	.197	5.0	50
53325540	M-25	5	.157	4.0	50
53325640	M-25	6	.157	4.0	50
53332270	M-32	2	.276	7.0	50
53332280	M-32	2	.315	8.0	50
53332290	M-32	2	.354	9.0	50
53332370	M-32	3	.276	7.0	50
53332380	M-32	3	.315	8.0	50
53332460	M-32	4	.236	6.0	50
53332470	M-32	4	.276	7.0	50
53332560	M-32	5	.236	6.0	50
53332650	M-32	6	.197	5.0	50
53332840	M-32	8	.157	4.0	50
53332850	M-32	8	.197	5.0	50
53332940	M-32	9	.157	4.0	50
53340290	M-40	2	.354	9.0	25
53340310	M-40	3	.394	10.0	25
53340480	M-40	4	.315	8.0	25
53340490	M-40	4	.354	9.0	25
53340580	M-40	5	.315	8.0	25
53340590	M-40	5	.354	9.0	25
53340670	M-40	6	.276	7.0	25
53340860	M-40	8	.236	6.0	25
53340969	M-40	9	.272	6.9	25
53350680	M-50	6	.315	8.0	10
53350780	M-50	7	.315	8.0	10
53350870	M-50	8	.276	7.0	10
53350164	M-50	16	.157	4.0	10
53350166	M-50	16	.236	6.0	10

Multiple Cable Sealing Bushing for Metric SKINTOP® Cable Glands

SKINTOP® DIX is a multiple hole sealing bushing designed to allow several cables to be inserted through one cable gland. This results in a reduction of space and cost, as a separate cable gland is not required for each cable.

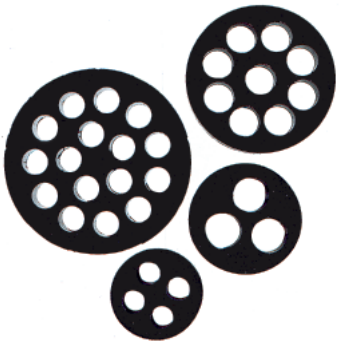

Technical Data:

Materials: NBR (Rubber)

Temperature: -40°C to +100°C

Seal: IP 54
IP 68 when all holes are optimally filled.

Special shapes available on request. Consult factory for details

Part Number	Thread Type & Size	# of Holes	Size of Holes inches	Size of Holes mm	Standard Pack Size
53316220	M-16	2	.079	2.0	100
53316230	M-16	2	.118	3.0	100
53316240	M-16	2	.157	4.0	100
53320250	M-20	2	.197	5.0	100
53320260	M-20	2	.236	6.0	100
53320340	M-20	3	.157	4.0	100
53320353	M-20	3	.209	5.3	100
53320440	M-20	4	.157	4.0	100
53320920	M-20	9	.079	2.0	100
53320430	M-20	4	.118	3.0	100
53325260	M-25	2	.236	6.0	50
53325350	M-25	3	.197	5.0	50
53325360	M-25	3	.236	6.0	50
53325370	M-25	3	.276	7.0	50
53325450	M-25	4	.197	5.0	50
53325540	M-25	5	.157	4.0	50
53325640	M-25	6	.157	4.0	50
53332270	M-32	2	.276	7.0	50
53332280	M-32	2	.315	8.0	50
53332290	M-32	2	.354	9.0	50
53332370	M-32	3	.276	7.0	50
53332380	M-32	3	.315	8.0	50
53332460	M-32	4	.236	6.0	50
53332470	M-32	4	.276	7.0	50
53332560	M-32	5	.236	6.0	50
53332650	M-32	6	.197	5.0	50
53332840	M-32	8	.157	4.0	50
53332850	M-32	8	.197	5.0	50
53332940	M-32	9	.157	4.0	50
53340290	M-40	2	.354	9.0	25
53340310	M-40	3	.394	10.0	25
53340480	M-40	4	.315	8.0	25
53340490	M-40	4	.354	9.0	25
53340580	M-40	5	.315	8.0	25
53340590	M-40	5	.354	9.0	25
53340670	M-40	6	.276	7.0	25
53340860	M-40	8	.236	6.0	25
53340969	M-40	9	.272	6.9	25
53350680	M-50	6	.315	8.0	10
53350780	M-50	7	.315	8.0	10
53350870	M-50	8	.276	7.0	10
53350164	M-50	16	.157	4.0	10
53350166	M-50	16	.236	6.0	10

PDC Item 25
Strain Relief M-40 1.102 B - Lapp Group S2529 / Trojan PN 915889-S2529 Page 1/1

SKINTOP®

Metric Thread — **Non-Metallic Cable Glands**

SKINTOP® SLM/SLRM

Strain Relief with Metric Thread

Similar Products
- SKINTOP® FLEX

Complete the Installation

SKINTOP® BRUSH Add-on: page 547

Plugs: page 550

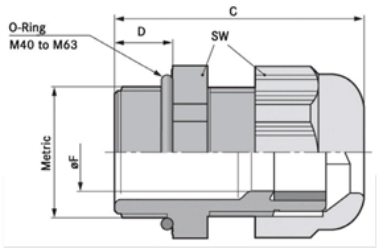

SKINTOP® SLM/SLRM is a durable, liquid-tight, easy-to-assemble strain relief cable gland with metric thread that is universally suited for all types of machinery & equipment, including automation, motion control, process control, and robotics.

Application Advantage

- The heavy duty SKINTOP® design provides great pullout strength and very reliable strain relief
- Superior integrated locking mechanism includes an internal ratchet for vibration-proof protection
- Multi-trapezoidal thread requires just one twist to tighten
- Generous high-quality neoprene bushing provides a liquid-tight and dust-proof hermetic seal

Approvals

Technical Data

Material:	
- Body:	Polyamide
- Bushing:	CR
Locknuts:	Included
Temperature Range:	
- Static:	-40°C to +100°C
- Dynamic:	-20°C to +100°C
Color:	Black (RAL 9005), UV resistant Gray (RAL 7001)
Protection:	70 PSI
- Seal:	IP69K IP68, 5 bar (Exceeds NEMA 6/6P pressure rating)

Part Number Black	Part Number Gray	Thread Type & Size	UL Status	øF Clamping Range (inches)	øF Clamping Range (mm)	SW Wrenching Flats (inches)	C Overall Length (inches)	D Thread Length (inches)	Standard Pack Size
SKINTOP® SLM: Standard									
S2507	S1507	M12 x 1.5	Recognized	0.138 - 0.276	3.5 - 7.0	0.591	1.181	0.315	100
S2509	S1509	M16 x 1.5*	Recognized	0.177 - 0.394	4.5 - 10.0	0.748	1.339	0.315	100
S2513	S1513	M20 x 1.5*	Listed	0.276 - 0.512	7.0 - 13.0	0.984	1.457	0.354	100
S2516	S1516	M25 x 1.5*	Listed	0.354 - 0.669	9.0 - 17.0	1.181	1.575	0.394	50
S2521	S1521	M32 x 1.5	Listed	0.433 - 0.827	11.0 - 21.0	1.417	1.850	0.394	25
S2529	S1529	M40 x 1.5	Listed	0.748 - 1.102	19.0 - 28.0	1.811	2.047	0.394	10
S2536	S1536	M50 x 1.5	Listed	1.063 - 1.378	27.0 - 35.0	2.165	2.441	0.472	5
S2542	S1542	M63 x 1.5	Listed	1.339 - 1.772	34.0 - 45.0	2.598	2.795	0.472	5
SKINTOP® SLRM: Reducer Bushing									
S2607	S1607	M12 x 1.5	Recognized	0.039 - 0.197	1.0 - 5.0	0.591	1.181	0.315	100
S2609	S1609	M16 x 1.5*	Recognized	0.079 - 0.276	2.0 - 7.0	0.748	1.339	0.315	100
S2613	S1613	M20 x 1.5*	Listed	0.197 - 0.394	5.0 - 10.0	0.984	1.457	0.354	100
S2616	S1616	M25 x 1.5*	Listed	0.236 - 0.512	6.0 - 13.0	1.181	1.575	0.394	50
S2621	S1621	M32 x 1.5	Listed	0.276 - 0.591	7.0 - 15.0	1.417	1.850	0.394	25
S2629	S1629	M40 x 1.5	Listed	0.591 - 0.906	15.0 - 23.0	1.811	2.047	0.394	10
S2636	S1636	M50 x 1.5	Listed	0.866 - 1.142	22.0 - 29.0	2.165	2.441	0.472	5
S2642	S1642	M63 x 1.5	Listed	1.102 - 1.535	28.0 - 39.0	2.598	2.795	0.472	5

* Metric sizes M16, M20, and M25 also available in an extended thread version. To maintain UL rating, please use a locknut.
Orders of 2000 pieces or more per item will be bulk packaged unless otherwise requested.

Photographs are not to scale and are not true representations of the products in question.
For current information go to our website. If not otherwise specified, all values relating to the product are nominal values.

DOWNLOAD PDF CATALOG PAGE | SAMPLE REQUEST

Multiple Cable Sealing Bushing for PG & NPT SKINTOP® Cable Glands

SKINTOP® DIX is a multiple hole sealing bushing designed to allow several cables to be inserted through one cable gland. This results in a reduction of space and cost, as a separate cable gland is not required for each cable.

Technical Data:

- Color: Natural
- Materials: Silicone
- Temperature: -30°C to +100°C
- Seal: IP 54
  IP 68 when all holes are optimally filled.

Part Number	Thread Type & Size	Thread Type & Size	# of Holes	Size of Holes inches	Size of Holes mm	Standard Pack Size
53607225	PG-7	-	2	.098	2.5	100
53607417	PG-7	-	4	.067	1.7	100
53609230	PG-9	NPT-3/8"	2	.118	3.0	100
53611225	PG-11	-	2	.098	2.5	100
53611240	PG-11	-	2	.157	4.0	100
53611330	PG-11	-	3	.118	3.0	100
53611430	PG-11	-	4	.118	3.0	100
53613250	PG-13	NPT-1/2"	2	.197	5.0	100
53613340	PG-13	NPT-1/2"	3	.157	4.0	100
53613440	PG-13	NPT-1/2"	4	.157	4.0	100
53616140	PG-16	-	1	.157	4.0	50
53616225	PG-16	-	2	.098	2.5	50
53616240	PG-16	-	2	.157	4.0	50
53616260	PG-16	-	2	.236	6.0	50
53616340	PG-16	-	3	.157	4.0	50
53616350	PG-16	-	3	.197	5.0	50
53616356	PG-16	-	3	.220	5.6	50
53616360	PG-16	-	3	.236	6.0	50
53616440	PG-16	-	4	.157	4.0	50
53616450	PG-16	-	4	.197	5.0	50
53616540	PG-16	NPT-3/4"	5	.157	4.0	50
53621270	PG-21	NPT-3/4"	2	.276	7.0	50
53621280	PG-21	NPT-3/4"	2	.315	8.0	50
53621370	PG-21	NPT-3/4"	3	.276	7.0	50
53621380	PG-21	NPT-3/4"	3	.315	8.0	50
53621460	PG-21	NPT-3/4"	4	.236	6.0	50
53621550	PG-21	NPT-3/4"	5	.197	5.0	50
53621640	PG-21	NPT-1"	6	.157	4.0	50
53629290	PG-29	NPT-1"	2	.354	9.0	50
53629390	PG-29	NPT-1"	3	.354	9.0	50
53629470	PG-29	NPT-1"	4	.276	7.0	50
53629480	PG-29	NPT-1"	4	.315	8.0	50
53629490	PG-29	NPT-1"	4	.354	9.0	50
53629556	PG-29	NPT-1"	5	.220	5.6	50
53629570	PG-29	NPT-1"	5	.276	7.0	50
53629675	PG-29		6	.295	7.5	50

SKINTOP® DIX-DV INSERTS

Inserts for SKINTOP® DIX NPT, PG & Metric

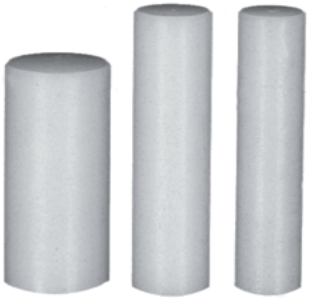

SKINTOP® DIX-DV inserts are designed to seal unused positions in SKINTOP® DIX bushings, which need to be closed to ensure the proper class protection.

Technical Data:

- Materials: Polyamide

Part Number	Diameter inches	Diameter mm	Length inches	Length mm	Standard Pack Size
53100003	.118	3.0	.354	9	100
53100004	.157	4.0	.354	9	100
53100005	.197	5.0	.433	11	100
53100006	.236	6.0	.551	14	100
53100007	.276	7.0	.551	14	100
53100008	.315	8.0	.551	14	100
53100009	.354	9.0	.551	14	100

Multiple Cable Sealing Bushing for PG & NPT SKINTOP® Cable Glands

SKINTOP® DIX is a multiple hole sealing bushing designed to allow several cables to be inserted through one cable gland. This results in a reduction of space and cost, as a separate cable gland is not required for each cable.

Technical Data:

Color:	Natural
Materials:	Silicone
Temperature:	-30°C to +100°C
Seal:	IP 54 IP 68 when all holes are optimally filled.

Part Number	Thread Type & Size	Thread Type & Size	# of Holes	Size of Holes inches	Size of Holes mm	Standard Pack Size
53607225	PG-7	-	2	.098	2.5	100
53607417	PG-7	-	4	.067	1.7	100
53609230	PG-9	NPT-3/8"	2	.118	3.0	100
53611225	PG-11	-	2	.098	2.5	100
53611240	PG-11	-	2	.157	4.0	100
53611330	PG-11	-	3	.118	3.0	100
53611430	PG-11	-	4	.118	3.0	100
53613250	PG-13	NPT-1/2"	2	.197	5.0	100
53613340	PG-13	NPT-1/2"	3	.157	4.0	100
53613440	PG-13	NPT-1/2"	4	.157	4.0	100
53616140	PG-16	-	1	.157	4.0	50
53616225	PG-16	-	2	.098	2.5	50
53616240	PG-16	-	2	.157	4.0	50
53616260	PG-16	-	2	.236	6.0	50
53616340	PG-16	-	3	.157	4.0	50
53616350	PG-16	-	3	.197	5.0	50
53616356	PG-16	-	3	.220	5.6	50
53616360	PG-16	-	3	.236	6.0	50
53616440	PG-16	-	4	.157	4.0	50
53616450	PG-16	-	4	.197	5.0	50
53616540	PG-16	NPT-3/4"	5	.157	4.0	50
53621270	PG-21	NPT-3/4"	2	.276	7.0	50
53621280	PG-21	NPT-3/4"	2	.315	8.0	50
53621370	PG-21	NPT-3/4"	3	.276	7.0	50
53621380	PG-21	NPT-3/4"	3	.315	8.0	50
53621460	PG-21	NPT-3/4"	4	.236	6.0	50
53621550	PG-21	NPT-3/4"	5	.197	5.0	50
53621640	PG-21	NPT-1"	6	.157	4.0	50
53629290	PG-29	NPT-1"	2	.354	9.0	50
53629390	PG-29	NPT-1"	3	.354	9.0	50
53629470	PG-29	NPT-1"	4	.276	7.0	50
53629480	PG-29	NPT-1"	4	.315	8.0	50
53629490	PG-29	NPT-1"	4	.354	9.0	50
53629556	PG-29	NPT-1"	5	.220	5.6	50
53629570	PG-29	NPT-1"	5	.276	7.0	50
53629675	PG-29		6	.295	7.5	50

SKINTOP® DIX-DV INSERTS

Inserts for SKINTOP® DIX NPT, PG & Metric

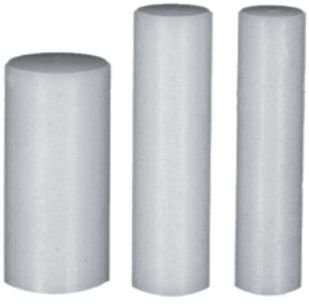

SKINTOP® DIX-DV inserts are designed to seal unused positions in SKINTOP® DIX bushings, which need to be closed to ensure the proper class protection.

Technical Data:

Materials:	Polyamide

Part Number	Diameter inches	Diameter mm	Length inches	Length mm	Standard Pack Size
53100003	.118	3.0	.354	9	100
53100004	.157	4.0	.354	9	100
53100005	.197	5.0	.433	11	100
53100006	.236	6.0	.551	14	100
53100007	.276	7.0	.551	14	100
53100008	.315	8.0	.551	14	100
53100009	.354	9.0	.551	14	100

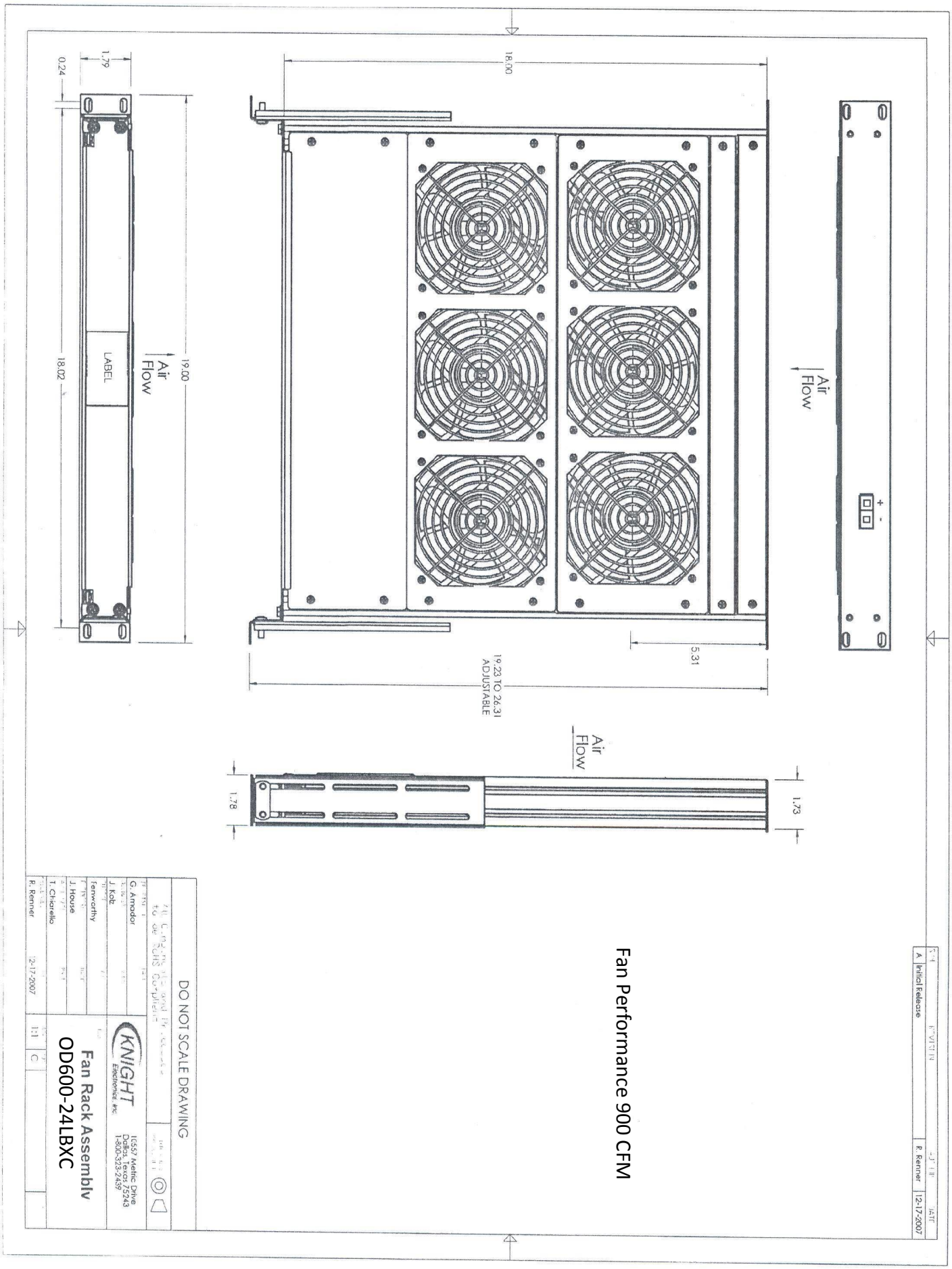
18.00
1.79
0.24
19.00
18.02
LABEL
Air Flow
Air Flow
5.31
19.23 TO 26.31
ADJUSTABLE
Air Flow
1.78
1.73
Fan Performance 900 CFM
DO NOT SCALE DRAWING
G. Amador
J. Kolb
Fenworthy
J. House
T. Chiarello
R. Renner
12-17-2007
KNIGHT Electronics, Inc.
10557 Metric Drive
Dallas, Texas 75243
1-800-323-2439
Fan Rack Assembly
OD600-24LBXC
1:1
C
A
Initial Release
R. Renner
12-17-2007

SPECTRACOOL INDOOR/OUTDOOR

G57
20000 BTU/Hr.
5861 Watt

G52
8000/12000 BTU/Hr.
2300/3500 Watt

G28
4000/6000 BTU/Hr.
1172/1758 Watt

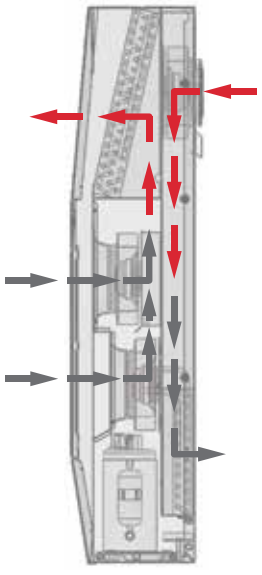

Clean AirFlow
Ambient AirFlow

INDUSTRY STANDARDS

UL/cUL Listed; Type 12, 3R, 4; 4X optional; File No. SA6453

CE
EAC
IP 56 Internal Loop
IP 34 on External Loop
Telcordia GR-487 capable (Outdoor)

APPLICATION

- Industrial automation
- Telecommunications equipment
- Waste water treatment systems
- Package handling equipment
- Security and defense systems
- And more

FEATURES

- Energy-efficient rotary compressor on most models
- R407c and R134a earth-friendly refrigerants
- 115, 230 and 400/460 VAC 3-phase power input on most models
- UL Listed to save customers time and money with agency approvals
- Outdoor model operating temperature range from -40 F/-40 C to 131 F/55 C
- Exterior and partially recessed mounting options
- Attractive industrial design with minimal use of visible fasteners
- Reliable mechanical thermostat on enclosure side of the unit; indoor air conditioner models include digital display on ambient side
- Dual condenser-side air movers for performance redundancy on G52 and G57 models
- Galvanized sheet-metal cover for rugged factory and outdoor environments
- Easy-mount flanges for simple installation
- Cut-out adapter options for enclosures with GENESIS and T-Series air conditioners, enable users to easily transition to the new unit
- Dust-resistant condenser coil allows the unit to be run filterless in most applications
- Cleanable, reusable aluminum mesh filter protects coils for maximum cooling performance
- Mounting hardware, gaskets and user manual furnished with the unit
- Every unit functionally tested before shipping
- Standard Indoor Air Conditioner models also include:
  - Active condensate management with heater strip
  - Power-off relay for door switch and other system requirements
  - Malfunction switch
- Standard Outdoor Air Conditioner models also include:
  - Telcordia GR-487 capable
  - Corrosion-resistant components
  - Malfunction switch
  - Compressor heater
  - Head pressure control
  - Up to 2000 Watt (G28, G52) and 3000 Watt (G57) enclosure heater

SPECIFICATIONS

- Nominal cooling capacity:
  G28 4000 & 6000 BTU/Hr. (1172 and 1758 W)
  G52 8000 & 12000 BTU/Hr. (2344 and 3516 W)
  G57 20000 BTU/Hr. (5861 W)
- Outdoor model operating temperature range from -40 F/-40 C to 131 F/55 C

FINISH

- RAL 7035 light-gray, semi-textured powder-coat paint
- Other colors and textures available

NOTES

Visit www.PentairProtect.com to download 2D and 3D CAD drawings into the overall design of your electrical system.

Performance Data G52 Models 8000/12000 BTU/Hr. (2300/3500 Watt)

CATALOG NUMBER						
Indoor Model	G520816G050	G520826G050	G520846G050	G521216G050	G521226G050	G521246G050
Indoor Model Stainless Steel Type 4X	G520816G051	G520826G051	G520846G051	G521216G051	G521226G051	G521246G051
Indoor Model with Remote Access Control*	G520816G060	G520826G060	G520846G060	G521216G060	G521226G060	G521246G060
Outdoor Model without Heat Pkg.	G520816G100	G520826G100	G520846G100	G521216G100	G521226G100	G521246G100
Outdoor Model Partial Recessed Mount	G520816G101	G520826G101	G520846G101	G521216G101	G521226G101	G521246G101
Outdoor Model without Heat Pkg. Stainless Steel Type 4X	G520816G102	G520826G102	G520846G102	G521216G102	G521226G102	G521246G102
Outdoor Model with Heat Pkg.	G520816G150	G520826G150	G520846G150	G521216G150	G521226G150	G521246G150
Outdoor Model with Heat Pkg. Stainless Steel Type 4X	G520816G151	G520826G151	G520846G151	G521216G151	G521226G151	G521246G151
COOLING PERFORMANCE						
Nominal:						
BTU/Hr.	**8000**	**8000**	**8000**	**12000**	**12000**	**12000**
Watts	**2300**	**2300**	**2300**	**3500**	**3500**	**3500**
At 131 F/131 F (55 C/55 C):						
BTU/Hr.	7300/8200	7300/8200	8800/9800	12000/12500	12000/12500	11100/12000
Watts	2139/2403	2139/2403	2578/2871	3516/3662	3516/3662	3252/3516
At 95 F/95 F (35 C/35 C):						
BTU/Hr.	6000/6800	6000/6800	7400/8200	9900/10700	9900/10700	9900/10700
Watts	1758/1992	1758/1992	2168/2402	2900/3135	2900/3135	2900/3135
Refrigerant	R134a	R134a	R134a	R134a	R134a	R134a
Refrigerant Charge (ounces/grams)	24/680	24/680	24/680	38/1077	38/1077	38/1077
Operating Temperature Range:						
Maximum (°F/°C)	131/55	131/55	131/55	131/55	131/55	131/55
Indoor Minimum (°F/°C)	50/10	50/10	50/10	50/10	50/10	50/10
Outdoor Minimum (°F/°C)	-40/-40	-40/-40	-40/-40	-40/-40	-40/-40	-40/-40
Airflow at 0 Static Pressure:						
Internal loop 50 Hz (CFM / m^3/hr.)	285/484	285/484	285/484	287/487	287/487	287/487
External loop 50 Hz (CFM / m^3/hr.)	650/1104	650/1104	650/1104	635/1078	635/1078	635/1078
Internal loop 60 Hz (CFM / m^3/hr.)	310/527	310/527	310/527	305/518	305/518	305/518
External loop 60 Hz (CFM / m^3/hr.)	700/1189	700/1189	700/1189	650/1104	650/1104	650/1104
Max. Heater W (Outdoor Models):	2000	2000	NA	2000	2000	NA
ELECTRICAL DATA						
Rated Voltage	**115**	**230/208-230**	**400/460 3~**	**115**	**230/208-230**	**400/460 3~**
Frequency (Hz)	50/60	50/60	50/60	50/60	50/60	50/60
Operating Range	+/- 10%	+/- 10%	+/- 10%	+/- 10%	+/- 10%	+/- 10%
Max. Power Consumption (W)	1250/1415	1250/1415	806/957**	2100/2427	1830/2130	910/1106**
Max. Nominal Current (A at 50/60 Hz)	11.2/12.3	5.6/7.0-6.2	3.1/3.2	16.1/21.0	9.1/10.6-9.5	3.6/3.5
Starting Current (A)	48	27	16	57	38	16
Agency Approvals	UL/cUL Listed CE EAC Others available upon request					
Power Input Description	Terminal Block					
ENCLOSURE PROTECTION						
UL Type	Type 12, 3R, 4 standard Type 4X Stainless steel optional					
International Rating	IP56 internal loop IP34 external loop					
CONTROLLER						
Description	Basic mechanical thermostat with digital display					
Thermostat Location	Enclosure side on all base models					
Digital Display Location:						
Indoor Models	Ambient side					
Outdoor Models	Enclosure side					
Factory Thermostat Setting (F/C)	80/27					
SOUND LEVEL						
At 1.5 Meters	68 dB(A)					
UNIT CONSTRUCTION						
Material	Galvanized sheet metal standard Stainless steel optional					
Finish	RAL 7035 light-gray, semi-textured powder-coat paint standard Other colors available					
ACCESSORIES						
EASYSWAP Adaptor Plenum (GENESIS M52)	Enables SPECTRACOOL to be mounted to a GENESIS M52 air conditioner cutout Catalog Number PLM52G52					
UNIT DIMENSIONS						
Height (in./mm)	52.69/1338					
Width (in./mm)	17.12/435					
Depth (in./mm)	11.66/296					
Weight (lb./kg)	128/58.1	128/58.1	138/62.6	131/59.4	131/59.4	141/64.0

*Units with Remote Access Control utilize a digital controller and communicate via EtherNet/IP, Profinet, Modbus TCP/IP and SNMP over ethernet or modbus RTU over USB.

**Watts based on .65 power factor.

Performance Curves for G52 Models 8000 BTU/Hr. (2300 Watt)

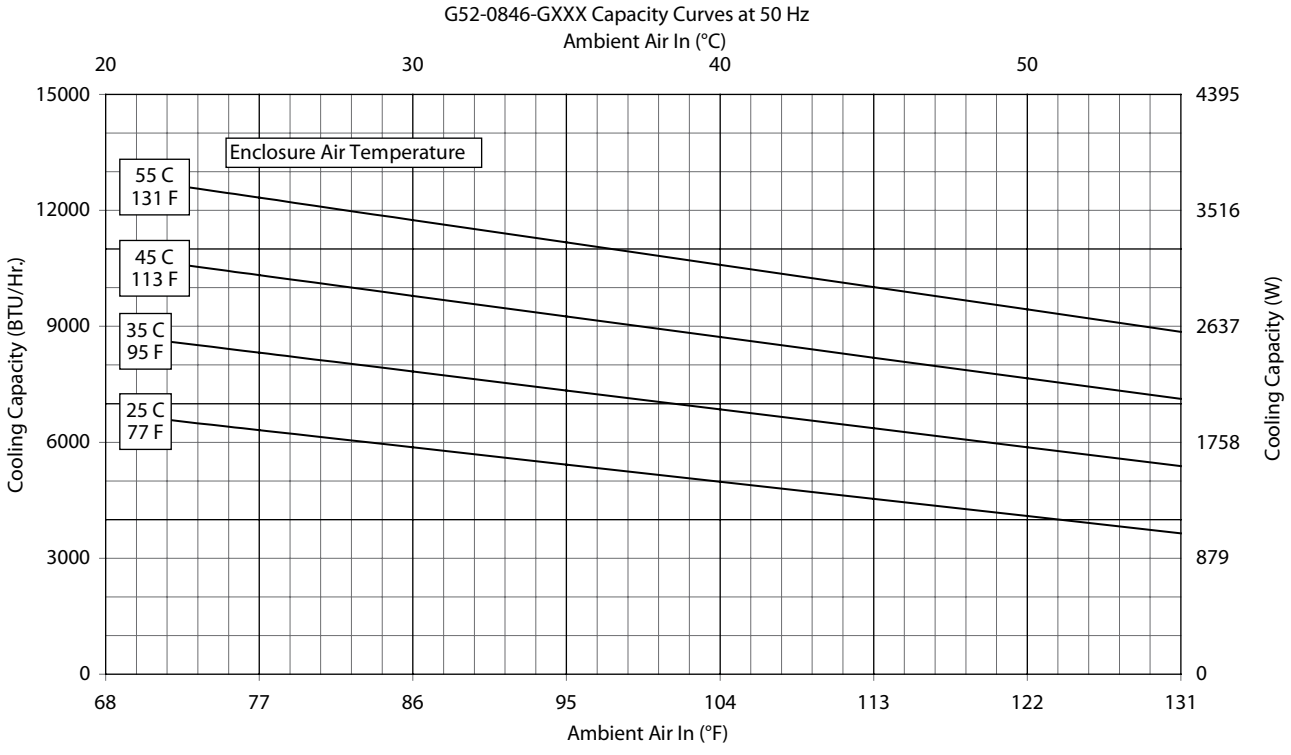

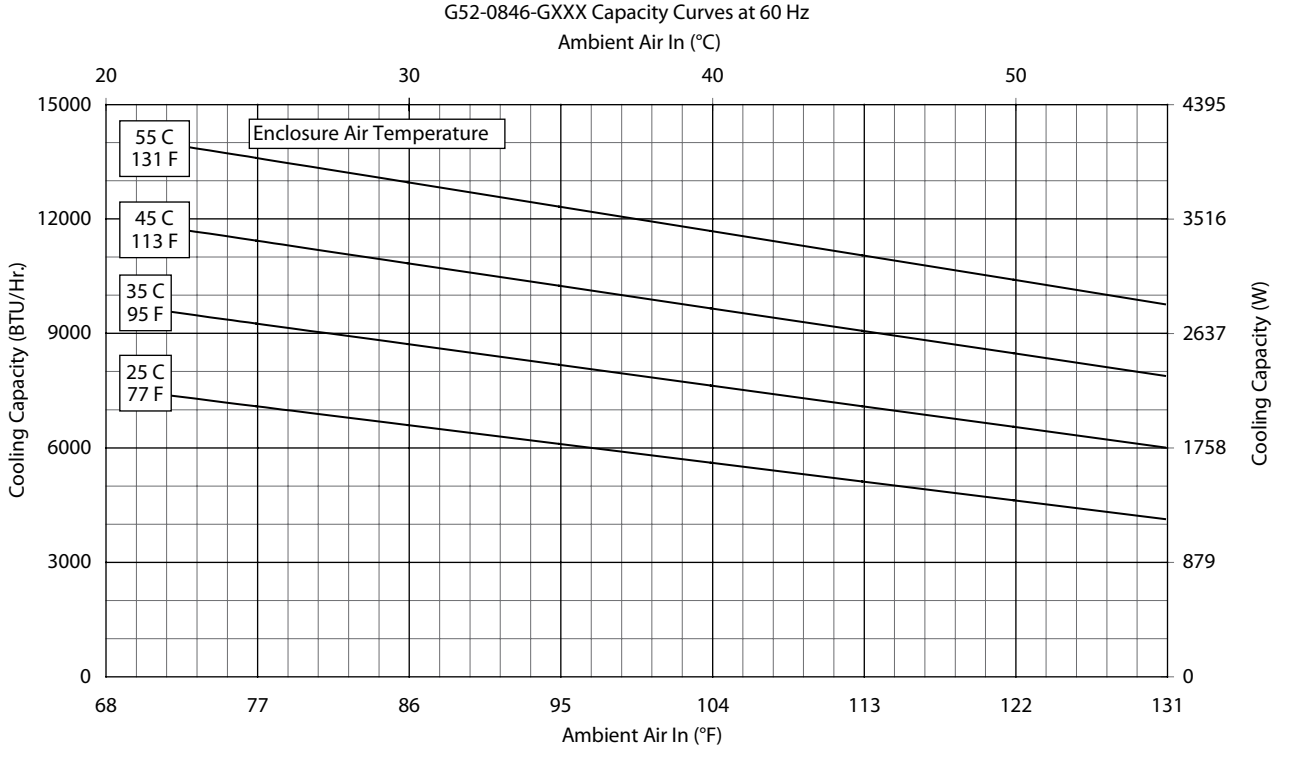

G52 Models 8000/12000 BTU/Hr. (2300/3500 Watt)

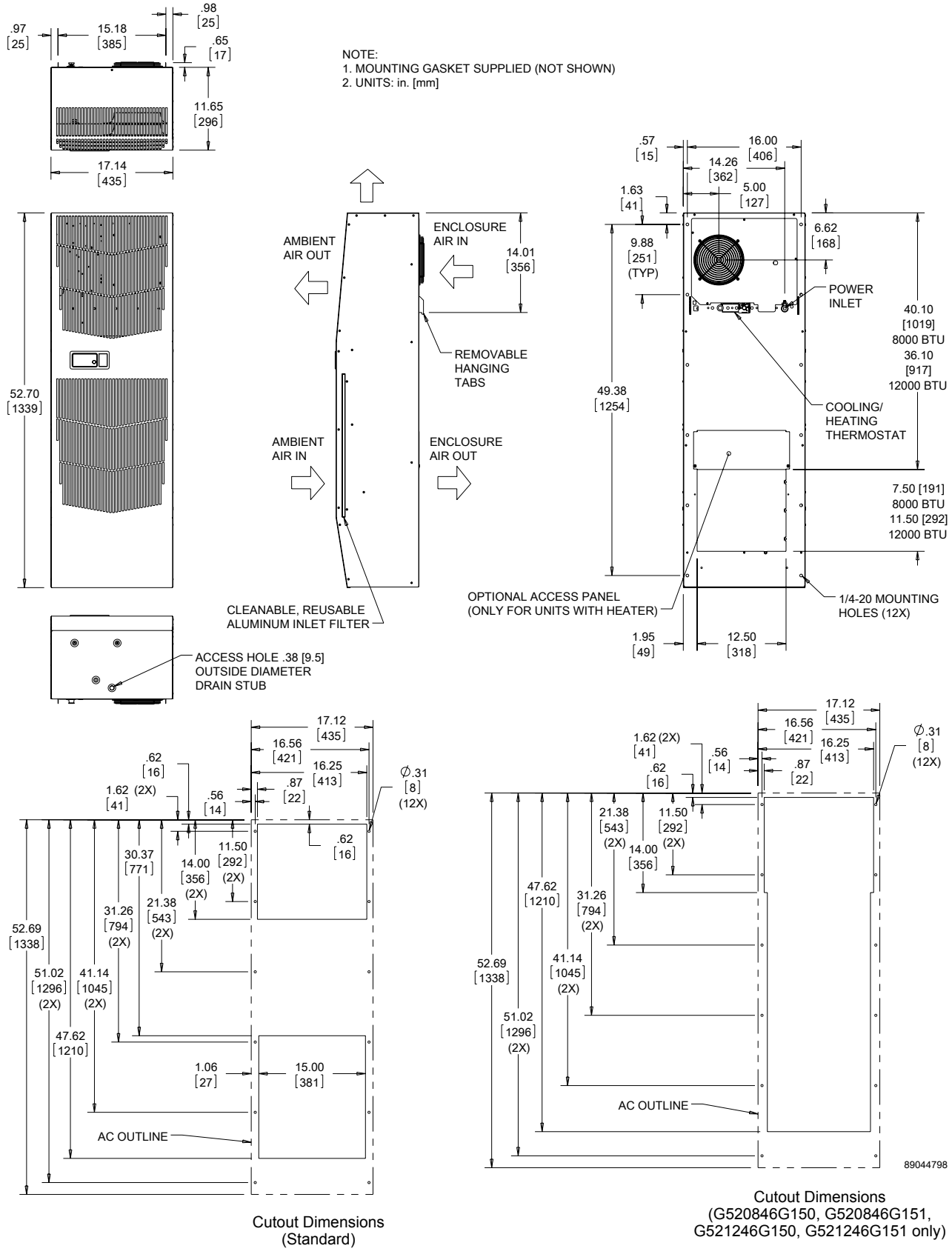

Cutout Dimensions (Standard)

Cutout Dimensions (G520846G150, G520846G151, G521246G150, G521246G151 only)

Visit nVent.com/HOFFMAN to download 2D and 3D CAD drawings into the overall design of your electrical system.

REV	REVISION DESCRIPTION	LOG NO.	REV'D BY	CHK'D BY	APPRV'D BY	DATE YYYY-MM-DD
A	RELEASED	–	MJU	LG	HM	2023-03-30

TABLE OF CONTENTS

SHEET NO.	DESCRIPTION	SHEET NO.	DESCRIPTION
00	TABLE OF CONTENTS	15	
01	MAIN POWER	16	
02	CONTROLLER & RELAY OUTPUT CARDS	17	
03	RELAY OUTPUT CARDS	18	
04	RELAY OUTPUT CARDS	19	
05	DISCRETE INPUT CARDS	20	
06	BACKPLATE LAYOUT & BOM	21	
07		22	
08		23	
09		24	
10		25	
11		26	
12		27	
13		28	
14		29	

NOTES:

1. ELECTRICAL ASSEMBLY TO BE ASSEMBLED UNDER UL508A AND THE MINIMUM REQUIREMENTS OUTLINED IN ES0127.WHERE THERE IS A CONFLICT BETWEEN THIS DOCUMENT AND REQUIREMENTS OF ES0127, THE INFORMATION PRESENTED IN THIS DOCUMENT WILL BE USED.
2. ENCLOSURE ENVIRONMENTAL RATING – UL TYPE 4X (IP66).
3. MINIMUM WIRE SIZE FOR CONTROL WIRE IS 16AWG STRANDED COPPER UNLESS WIRE CABLE OR HARNESS IS PROVIDED FOR COMPONENTS BY MANUFACTURER OR PER TROJAN DESIGN.

WIRE COLOUR CODING LEGEND

DESCRIPTION	DESIGNATION	WIRE
3 PHASE POWER	L1	BLACK
	L2	BLACK
	L3	BLACK
DC CONTROL	24VDC	BLUE
	0VDC	WHITE/BLUE
GROUND	G	GREEN/YELLOW
EXTERNAL POWER		YELLOW

NOTE: EXCEPTION TO MANUFACTURER PRE-ASSEMBLED CABLES.

UNLESS OTHERWISE SPECIFIED:
DIMENSIONS ARE IN INCHES
TOLERANCES: 2 PL DEC ± N/A
3 PL DEC ± N/A
ANGLE DEG ± N/A
REMOVE ALL BURRS, ALL CORNERS
R 0.010 OR BREAK EDGE
◇ – CRITICAL CHARACTERISTIC

TROJANUV
3020 GORE ROAD, LONDON, ONTARIO, CANADA, N5V 4T7
COPYRIGHT © TROJAN TECHNOLOGIES, 2023. ALL RIGHTS RESERVED.

DESCRIPTION: WD, UVSIGNA HSC 1
EL CENTRO, CA

THIRD ANGLE PROJECTION
0 0.5 1.0
1.0" ON ORIGINAL DWG
SCALE: NTS
DWG NO. E810206H1
REV A
SHEET 00 OF 06
SIZE D

INCOMING SUPPLY—DISCONNECTING MEANS AND OVERCURRENT PROTECTION DEVICE (BY OTHERS)
480VAC, 2.5kVA, 3A, 3PH, 3W+GND, 60HZ WYE SOURCE
SHORT CIRCUIT CURRENT 10kA RMS SYMMETRICAL @480VAC MAX.

L1
L2
L3
PE

SUPPLY LIMIT

PE/GND

1L1 1L2 1L3

14AWG

0120MCB 1.6–2.5A (0505)
0255CON 1.8A

01200
01210
01220

0120MTR

HYDRAULIC PUMP
1.0 HP
1.8FLA

0130CB 6A

0130PS

01300
01310
01320

0130CB1 10A

01301

16AWG

24VDC
0VDC

0200

24VDC 10A
POWER SUPPLY

TROJANUV
3020 GORE ROAD, LONDON, ONTARIO, CANADA, N5V 4T7
COPYRIGHT © TROJAN TECHNOLOGIES, 2023 . ALL RIGHTS RESERVED.

DESCRIPTION: WD, UVSIGNA HSC 1
EL CENTRO, CA

REVISED BY	MJU
CHECKED BY	LG
APPROVED BY	HM
APPROVAL DATE YYYY-MM-DD	2023-03-30
SCALE:	NTS
1.0" ON ORIGINAL DWG	0 0.5 1.0
DWG NO.	E810206H1
REV	A
SHEET	01 OF 06
SIZE	D

+24VDC
0130
24VDC

0VDC
0132
0VDC

+24VDC
0235
24VDC

0VDC
0235
0VDC

02 00
02 01
02 02
02 03
02 04
02 05
02 06
02 07
02 08
02 09
02 10
02 11
02 12
02 13
02 14
02 15
02 16
02 17
02 18
02 19
02 20
02 21
02 22
02 23
02 24
02 25
02 26
02 27
02 28
02 29
02 30
02 31
02 32
02 33
02 34
02 35

/16AWG

RS+
220Ω
*NOTE
1&2
RS−
COM

RS+ WHITE/ORANGE
RS− ORANGE/WHITE
COM BLUE/WHITE

FROM SCC

SEE NOTE 2

0218_CAB
TROJAN
#917750

RS485 PORT DETAIL
PIN/TERMINAL 3 = RS+
PIN/TERMINAL 8 = RS−
PIN/TERMINAL 5 − COM

0215CNTLR (SLOT 0)

24V
0V
+
+
−
−

/16AWG
/16AWG

916554-8102T

CPU
ETHERNET TCP/IP

RS 485
COMMUNICATIONS

02 36
02 37
02 38
02 39
02 40
02 41
02 42
02 43
02 44
02 45
02 46
02 47
02 48
02 49
02 50
02 51
02 52
02 53
02 54
02 55
02 56
02 57
02 58
02 59
02 60
02 61
02 62
02 63
02 64
02 65
02 66
02 67
02 68
02 69
02 70
02 71

0237SOL
0239SOL
0237CAB

CARD 2 (SLOT 1)
DO1 1
DO2 5
24V 2
24V 6
0V 3
0V 7
4
8

750-512

0255CON
(A2) (A1)
DO3
02550
(13)
0120MCB
(14)
0VDC

CARD 3 (SLOT 2)
DO3 1
DO4 5
24V 2
24V 6
0V 3
0V 7
4
8

750-512

2PT RELAY OUTPUT CARD

WIPER EXTEND/LIFT UP

WIPER RETRACT/LIFT DOWN

2PT RELAY OUTPUT CARD

HYD. PUMP MOTOR
(0120, 0121, 0122, 0505)

24VDC
0236

0VDC
0236

24VDC
0300

0VDC
0300

NOTE:
1. IF HSC IS LAST PIECE OF EQUIPMENT IN RS485 COMMUNICATION CHAIN, INSTALL END OF LINE RESISTOR ACROSS RS+ AND RS− TERMINALS.
2. USE 220 OHM RESISTOR AS SHOWN IN WIRING DIAGRAM, IN CASE OF COMMUNICATION FAILURE USE 120 OHM RESISTOR (INCLUDED IN BOM).

TROJANUV
3020 GORE ROAD, LONDON, ONTARIO, CANADA, N5V 4T7
COPYRIGHT © TROJAN TECHNOLOGIES, 2023 . ALL RIGHTS RESERVED.

DESCRIPTION: WD, UVSIGNA HSC 1
EL CENTRO, CA

REVISED BY	MJU	DWG NO.	REV
CHECKED BY	LG	E810206H1	A
APPROVED BY	HM		
APPROVAL DATE YYYY-MM-DD	2023-03-30	SHEET 02 OF 06	SIZE D

0 0.5 1.0
1.0" ON ORIGINAL DWG
SCALE: NTS

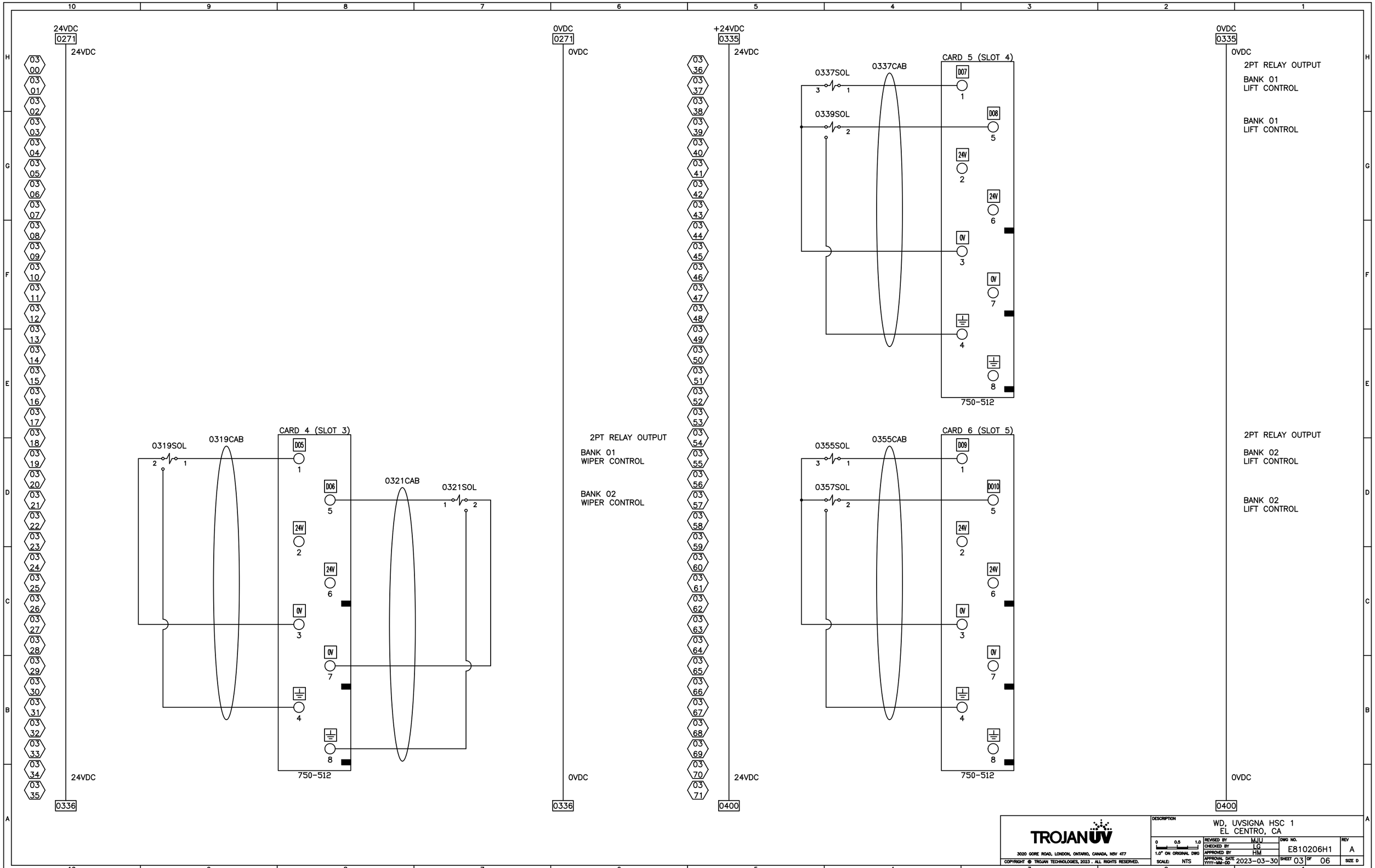
24VDC
0271
24VDC
0336
0VDC
0271
0VDC
0336
+24VDC
0335
24VDC
0400
0VDC
0335
0VDC
0400
0319SOL
0319CAB
CARD 4 (SLOT 3)
D05
D06
24V
0V
750-512
0321CAB
0321SOL
2PT RELAY OUTPUT
BANK 01
WIPER CONTROL
BANK 02
WIPER CONTROL
0337SOL
0337CAB
0339SOL
CARD 5 (SLOT 4)
D07
D08
750-512
0355SOL
0355CAB
0357SOL
CARD 6 (SLOT 5)
D09
D010
750-512
2PT RELAY OUTPUT
BANK 01
LIFT CONTROL
BANK 01
LIFT CONTROL
2PT RELAY OUTPUT
BANK 02
LIFT CONTROL
BANK 02
LIFT CONTROL
TROJAN UV
3020 GORE ROAD, LONDON, ONTARIO, CANADA, N5V 4T7
COPYRIGHT © TROJAN TECHNOLOGIES, 2023 . ALL RIGHTS RESERVED.
DESCRIPTION
WD, UVSIGNA HSC 1
EL CENTRO, CA
REVISED BY MJU
CHECKED BY LG
APPROVED BY HM
APPROVAL DATE YYYY-MM-DD 2023-03-30
SCALE: NTS
DWG NO. E810206H1
REV A
SHEET 03 OF 06
SIZE D

24VDC
0371
24VDC

04 00
04 01
04 02
04 03
04 04
04 05
04 06
04 07
04 08
04 09
04 10
04 11
04 12
04 13
04 14
04 15
04 16
04 17
04 18
04 19
04 20
04 21
04 22
04 23
04 24
04 25
04 26
04 27
04 28
04 29
04 30
04 31
04 32
04 33
04 34
04 35

24VDC
0436

0401SOL
0401CAB
CARD 7 (SLOT 6)
D011
D012
24V
0V
0V
1
5
2
6
3
7
4
8
750-512

0419SOL
0421SOL
0419CAB
CARD 8 (SLOT 7)
D013
D014
24V
0V
0V
1
5
2
6
3
7
4
8
750-512

0VDC
0371
0VDC
2PT RELAY OUTPUT
BANK 03
WIPER CONTROL

2PT RELAY OUTPUT
BANK 03
LIFT CONTROL

BANK 03
LIFT CONTROL

0VDC
0436

+24VDC
0435
24VDC

04 36
04 37
04 38
04 39
04 40
04 41
04 42
04 43
04 44
04 45
04 46
04 47
04 48
04 49
04 50
04 51
04 52
04 53
04 54
04 55
04 56
04 57
04 58
04 59
04 60
04 61
04 62
04 63
04 64
04 65
04 66
04 67
04 68
04 69
04 70
04 71

24VDC
0500

0VDC
0435
0VDC

0VDC
0500

TROJANUV
3020 GORE ROAD, LONDON, ONTARIO, CANADA, N5V 4T7
COPYRIGHT © TROJAN TECHNOLOGIES, 2023 . ALL RIGHTS RESERVED.

DESCRIPTION: WD, UVSIGNA HSC 1
EL CENTRO, CA

REVISED BY	MJU	DWG NO.	REV
CHECKED BY	LG	E810206H1	A
APPROVED BY	HM		
APPROVAL DATE YYYY-MM-DD	2023-03-30	SHEET 04 OF 06	SIZE D

0 0.5 1.0
1.0" ON ORIGINAL DWG
SCALE: NTS

+24VDC
0471

24VDC

0501HP
(BN) (BK)
(BU)

0503LS
(1) (2)
(4)

24VDC /16AWG — 0255CON (13) (14) — DI3 /16AWG

24VDC /16AWG — EXT RET / SEQ — 0X0 N.C.–C(2) — 0507SS (1) — DI4 /16AWG

24VDC /16AWG — 00X N.O.–L(4) (3) — DI5 /16AWG

24VDC /16AWG — WIPE / LIFT — 0X N.O.–R(4) — 0511SS (3) — DI6 /16AWG

CARD 9 (SLOT 8)

DI1	1	WIPER HIGH PRESSURE
DI2	5	HYDRAULIC FLUID LOW LEVEL
DI3	2	PUMP ON
DI4	6	LOCAL EXTEND
DI5	3	LOCAL SEQUENCE
DI6	7	LIFT
DI7	4	
DI8	8	

750-430

0VDC
0471

0VDC
8PT INPUT

CARD 10 (SLOT 9)

24VDC /16AWG — OFF / UP / DOWN — X00 N.O.–R(4) — 0519SS (3) — DI9 /16AWG

24VDC /16AWG — 00X N.O.–L(4) (3) — DI10 /16AWG

24VDC /16AWG — REMOTE OFF / LOC — 00X N.O.–L(4) — 0523SS (3) — DI11 /16AWG

24VDC /16AWG — 0X0 N.C.–C(2) (1) 2 1 3 4 — X000 N.O.–CT(4) — 0527SS (3) — DI12 /16AWG

24VDC /16AWG — REMOTE OFF / LOC — 00X N.O.–L(4) — 0529SS (3) — DI13 /16AWG

24VDC /16AWG — 0X0 N.C.–C(2) (1) 2 1 3 4 — X00 N.O.–CB(4) — 0527SS (3) — DI14 /16AWG

DI9	1	8PT INPUT
DI10	5	LIFT UP
DI11	2	LIFT DOWN
DI12	6	BANK 01 LOCAL
DI13	3	BANK 01 REMOTE
DI14	7	BANK 01 LIFT
DI15	4	BANK 02 LOCAL
DI16	8	BANK 02 REMOTE
		BANK 02 LIFT

750-430

24VDC

0536

24VDC
0535

24VDC

24VDC /16AWG — REMOTE OFF / LOC — 00X N.O.–L(4) — 0537SS (3) — DI17 /16AWG

24VDC /16AWG — 0X0 N.C.–C(2) (1) 2 1 3 4 — 00X0 N.O.–T(4) — 0527SS (3) — DI18 /16AWG

24VDC /16AWG — DI19 /16AWG

CARD 11 (SLOT 10)

DI17	1	
DI18	5	
DI19	2	
DI20	6	
DI21	3	
DI22	7	
DI23	4	
DI24	8	

750-430

0VDC

0VDC
0535

0VDC
8PT INPUT

BANK 03 LOCAL

BANK 03 REMOTE

BANK 03 LIFT

NODE ADDRESS
BIT ONE

HSC	BIT 2	BIT 1	NODE ID
1	0	0	10
2	0	1	20
3	1	0	30
4	1	1	40

BIT TWO

TROJANUV
3020 GORE ROAD, LONDON, ONTARIO, CANADA, N5V 4T7

COPYRIGHT © TROJAN TECHNOLOGIES, 2023 . ALL RIGHTS RESERVED.

DESCRIPTION: WD, UVSIGNA HSC 1
EL CENTRO, CA

REVISED BY	MJU	DWG NO.	REV
CHECKED BY	JG	E810206H1	A
APPROVED BY	HM		
APPROVAL DATE YYYY-MM-DD	2023-03-30	SHEET 05 OF 06	SIZE D

0 0.5 1.0
1.0" ON ORIGINAL DWG
SCALE: NTS

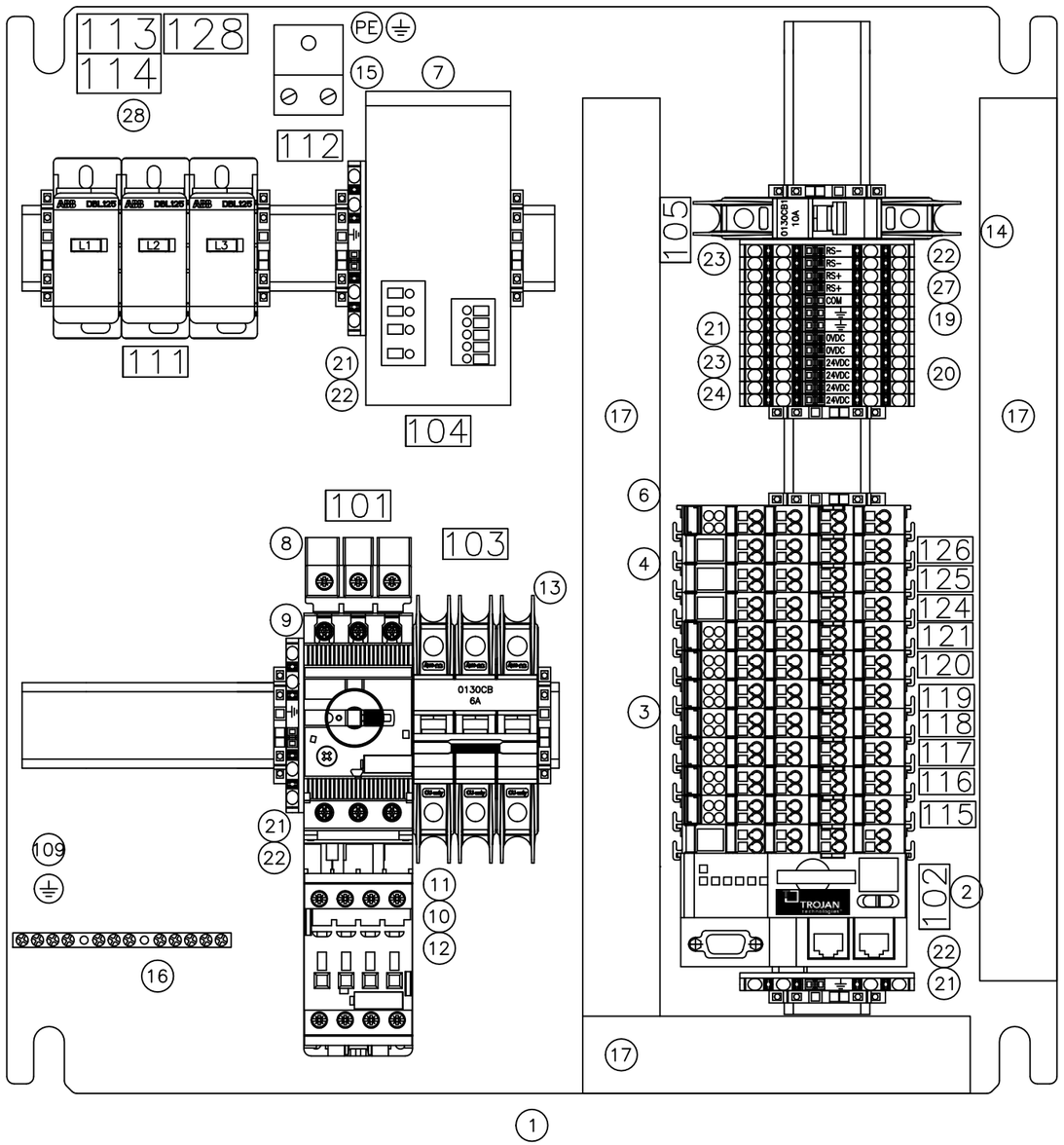

ITEM	QTY	NAMEPLATE NUMBER	DESCRIPTION 1	DESCRIPTION 2	DESCRIPTION 3
128	1	EMLP (27x12.5)	MAIN FEED	75C WIRE	
127					
126	1	EMLP (27x12.5)	DI3		
125	1	EMLP (27x12.5)	DI2		
124	1	EMLP (27x12.5)	DI1		
123					
122					
121	1	EMLP (27x12.5)	DO7		
120	1	EMLP (27x12.5)	DO6		
119	1	EMLP (27x12.5)	DO5		
118	1	EMLP (27x12.5)	DO4		
117	1	EMLP (27x12.5)	DO3		
116	1	EMLP (27x12.5)	DO2		
115	1	EMLP (27x12.5)	DO1		
114	1	EMLP (45x25)	INCOMING SUPPLY	480V 60 HZ	
113	1	EMLP (45x25)	ALL FIELD WIRING	USE COPPER	CONDUCTORS ONLY
112	1	EMLP (27x12.5)	TORQUE	50 lb.in	
111	1	EMLP (27x12.5)	TORQUE	31–44 lb.in	
110	1	US–EML (D12.5)	PE		
109	2	US–EML (D12.5)	⏚		
108					
107					
106					
105	1	EMLP (27x12.5)	0130CB1	10A PS	
104	1	EMLP (27x12.5)	0130PS	24VDC	
103	1	EMLP (27x12.5)	0130CB	POWER SUPPLY	
102	1	EMLP (27x12.5)	0215CNTLR	CONTROLLER	
101	1	EMLP (27x12.5)	0120MCB	MOTOR STARTER	
100					

ITEM	QTY	DESCRIPTION	MANUFACTURER	PART NUMBER	TROJAN NUMBER
36	1	CABLE ASSY, HSC G4 RS485	CUSTOM	917750	917750
35					
34					
33					
32					
31					
30					
29					
NOTE 1 → 28	3	DIST BLOCK, 125A ABB	ABB	DBL125	917305–125
NOTE 2 → 27	1	RESISTOR, 2200HM 1/4WATT	––	––	917835
26	1	RESISTOR, 120ohm DNET	––	––	913840
25	A/R	TERM BLK, END STOP CLIPFIX 35	PHOENIX CONTACT	3022276	916050–3022276
24	1	TERM BLK, JUMPER 4P FBS 4 5	PHOENIX CONTACT	3030187	916050–3030187
23	3	TERM BLK, JUMPER 2P FBS 2 5	PHOENIX CONTACT	3030161	916050–3030161
22	4	TERM BLK, END PLT D ST 2.5 QU	PHOENIX CONTACT	3030514	916050–3030514
21	5	TERM BLK, PIT 2.5 PE QUAT GND	PHOENIX CONTACT	3209594	916049–3209594
20	6	TERM BLK, PIT 2.5 QUATTRO BLU	PHOENIX CONTACT	3209581	916049–3209581
19	5	TERM BLK, PIT 2.5 QUATTRO GRY	PHOENIX CONTACT	3209578	916049–3209578
18	A/R	TERM BLK, DIN RAIL PERF 35X7.5	PHOENIX CONTACT	0801733	914147
17	A/R	WIRE DUCT, TYPE F LT GRY 1x3	PANDUIT	F1X3LG6 / C1LG6	913437–004
16	1	GROUND BAR, 12 TAP	T&B	35610203	917380–012BLU
NOTE 1 → 15	1	LUG, GND 2CON 600V 1/0–14AWG	BLACKBURN	ADR11–21	917397–1121
14	1	BREAKER, 10A 1P AC/DC C ABB	ABB	SU201M–C10	917139–MC1100
13	1	BREAKER, 6A 3P AC/DC C ABB	ABB	SU203M–C6	917139–MC3060
12	1	STARTER, AUXILIARY CONTACT	ABB	MS132–HKF1–11	917182–HKF111
11	1	STARTER, COUPLING LINK	ABB	BEA16–4	917182–BEA164
10	1	CONTACTOR, AF09 25A 1NO 24V	ABB	AF09–30–10–11	917180–09A024
9	1	STARTER, MS132 2.50A	ABB	MS132–2.5	917182–MS132G
8	1	STARTER, POWER IN FEED 3 PHASE	ABB	MS132–S1–M3–25	917182–S1M325
7	1	PS, 24VDC 3P TRIO 10A	PHOENIX CONTACT	2866459	916051–459
6	1	END MODULE	WAGO	750–600	916554–600
5					
4	3	DI 8CH 24VDC	WAGO	750–430	916554–430
3	7	DO 2CH RELAY	WAGO	750–512	916554–512
2	1	CONTROLLER, 8102T ENET RS485	CUSTOM	916554–8102T	916554–8102T
1	1	BACKPLATE, HSC G4 ELEC	CUSTOM	CUSTOM	900041

NOTE:

1. ACCORDING TO UL 508A, SECTION 54, ALL FIELD WIRING CONDUCTORS, EXTERNAL TO THE PANEL SHALL BE "COPPER CONDUCTORS ONLY" AND TEMPERATURE RATINGS FOR THE FIELD WIRING CONDUCTORS RATED LESS THAN 100 AMPS SHALL BE 75°C (167°F). REFER THE FOLLOWING BELOW MENTIONED DETAILS FOR FIELD WIRING TERMINATION TIGHTENING TORQUE.
   A. GROUND LUG 5.65 N–m (50 lb–in).
   B. DISTRIBUTION BLOCK 3.5– 5 N–m (30.97 – 44.25 lb–in).
2. USE 220 OHM RESISTOR AS SHOWN IN WIRING DIAGRAM, IN CASE OF COMMUNICATION FAILURE USE 120 OHM RESISTOR (INCLUDED IN BOM ITEM# 26).

TROJANUV
3020 GORE ROAD, LONDON, ONTARIO, CANADA, N5V 4T7
COPYRIGHT © TROJAN TECHNOLOGIES, 2023 . ALL RIGHTS RESERVED.

DESCRIPTION: WD, UVSIGNA HSC 1 EL CENTRO, CA
REVISED BY MJU
CHECKED BY LG
APPROVED BY HM
APPROVAL DATE YYYY–MM–DD 2023–03–30
DWG NO. E810206H1
REV A
SCALE: NTS
SHEET 06 OF 06
SIZE D
1.0" ON ORIGINAL DWG (0 0.5 1.0)

REV	REVISION DESCRIPTION	LOG NO.	REV'D BY	CHK'D BY	APPRV'D BY	DATE YYYY-MM-DD
A	RELEASED	–	MJU	LG	HM	2023-03-30

TABLE OF CONTENTS

SHEET NO.	DESCRIPTION	SHEET NO.	DESCRIPTION
00	TABLE OF CONTENTS	15	
01	MAIN POWER	16	
02	CONTROLLER & RELAY OUTPUT CARDS	17	
03	RELAY OUTPUT CARDS	18	
04	RELAY OUTPUT CARDS	19	
05	DISCRETE INPUT CARDS	20	
06	BACKPLATE LAYOUT & BOM	21	
07		22	
08		23	
09		24	
10		25	
11		26	
12		27	
13		28	
14		29	

NOTES:

1. ELECTRICAL ASSEMBLY TO BE ASSEMBLED UNDER UL508A AND THE MINIMUM REQUIREMENTS OUTLINED IN ES0127.WHERE THERE IS A CONFLICT BETWEEN THIS DOCUMENT AND REQUIREMENTS OF ES0127, THE INFORMATION PRESENTED IN THIS DOCUMENT WILL BE USED.
2. ENCLOSURE ENVIRONMENTAL RATING – UL TYPE 4X (IP66).
3. MINIMUM WIRE SIZE FOR CONTROL WIRE IS 16AWG STRANDED COPPER UNLESS WIRE CABLE OR HARNESS IS PROVIDED FOR COMPONENTS BY MANUFACTURER OR PER TROJAN DESIGN.

WIRE COLOUR CODING LEGEND

DESCRIPTION	DESIGNATION	WIRE
3 PHASE POWER	L1	BLACK
	L2	BLACK
	L3	BLACK
DC CONTROL	24VDC	BLUE
	0VDC	WHITE/BLUE
GROUND	G	GREEN/YELLOW
EXTERNAL POWER		YELLOW

NOTE: EXCEPTION TO MANUFACTURER PRE-ASSEMBLED CABLES.

UNLESS OTHERWISE SPECIFIED:
DIMENSIONS ARE IN INCHES
TOLERANCES: 2 PL DEC ± N/A
3 PL DEC ± N/A
ANGLE DEG ± N/A
REMOVE ALL BURRS, ALL CORNERS
R 0.010 OR BREAK EDGE
◇ – CRITICAL CHARACTERISTIC

TROJANUV
3020 GORE ROAD, LONDON, ONTARIO, CANADA, N5V 4T7
COPYRIGHT © TROJAN TECHNOLOGIES, 2023. ALL RIGHTS RESERVED.

DESCRIPTION: WD, UVSIGNA HSC 2
EL CENTRO, CA

THIRD ANGLE PROJECTION
0 0.5 1.0
1.0" ON ORIGINAL DWG
SCALE: NTS
DWG NO. E810206H2
REV A
SHEET 00 OF 06
SIZE D

INCOMING SUPPLY—DISCONNECTING MEANS AND OVERCURRENT PROTECTION DEVICE (BY OTHERS)
480VAC, 2.5kVA, 3A, 3PH, 3W+GND, 60HZ WYE SOURCE
SHORT CIRCUIT CURRENT 10kA RMS SYMMETRICAL @480VAC MAX.

L1
L2
L3
PE

SUPPLY LIMIT

PE/GND

1L1 1L2 1L3

14AWG

0120MCB 1.6–2.5A (0505) 1.8A
0255CON

01200 01210 01220

0120MTR

HYDRAULIC PUMP
1.0 HP
1.8FLA

0130CB 6A

0130PS

01300 01310 01320

0130CB1 10A

01301 16AWG

24VDC 16AWG 0200

0VDC 16AWG 0200

24VDC 10A
POWER SUPPLY

1L1 1L2 1L3

TROJANUV
3020 GORE ROAD, LONDON, ONTARIO, CANADA, N5V 4T7

COPYRIGHT © TROJAN TECHNOLOGIES, 2023 . ALL RIGHTS RESERVED.

DESCRIPTION: WD, UVSIGNA HSC 2
EL CENTRO, CA

REVISED BY	MJU	DWG NO.	REV
CHECKED BY	LG	E810206H2	A
APPROVED BY	HM		
APPROVAL DATE YYYY-MM-DD	2023-03-30	SHEET 01 OF 06	SIZE D

0 0.5 1.0
1.0" ON ORIGINAL DWG
SCALE: NTS

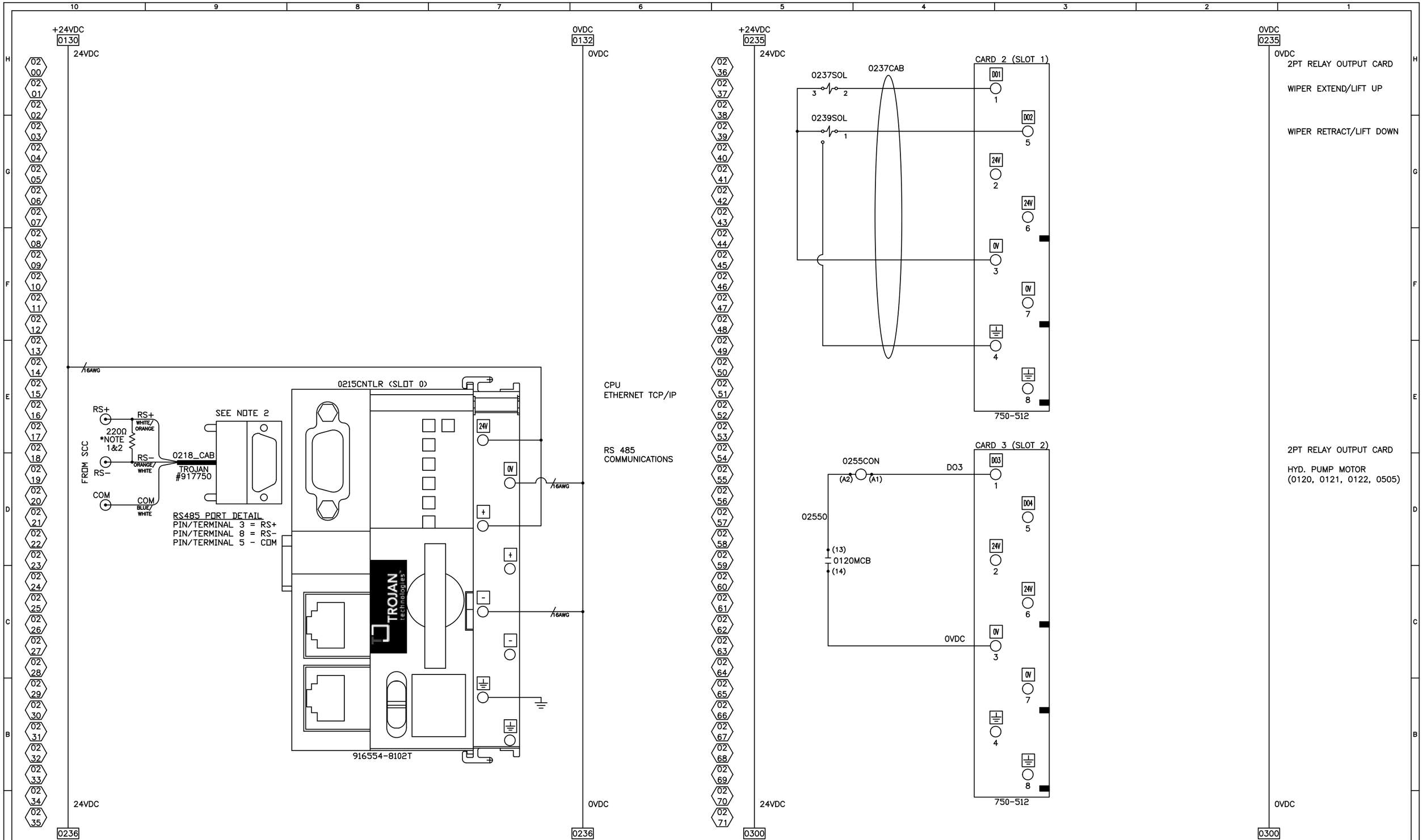

NOTE:
1. IF HSC IS LAST PIECE OF EQUIPMENT IN RS485 COMMUNICATION CHAIN, INSTALL END OF LINE RESISTOR ACROSS RS+ AND RS- TERMINALS.
2. USE 220 OHM RESISTOR AS SHOWN IN WIRING DIAGRAM, IN CASE OF COMMUNICATION FAILURE USE 120 OHM RESISTOR (INCLUDED IN BOM).

TROJAN UV
3020 GORE ROAD, LONDON, ONTARIO, CANADA, N5V 4T7

COPYRIGHT © TROJAN TECHNOLOGIES, 2023 . ALL RIGHTS RESERVED.

DESCRIPTION	WD, UVSIGNA HSC 2 EL CENTRO, CA		
REVISED BY	MJU	DWG NO.	E810206H2
CHECKED BY	LG	REV	A
APPROVED BY	HM		
SCALE: NTS	APPROVAL DATE YYYY-MM-DD 2023-03-30	SHEET 02 OF 06	SIZE D

24VDC
0271
24VDC

0319SOL
0319CAB
0321CAB
0321SOL

CARD 4 (SLOT 3)
D05
D06
24V
0V
750-512

0336

0VDC
0271
0VDC

2PT RELAY OUTPUT
BANK 01
WIPER CONTROL

BANK 02
WIPER CONTROL

0336

+24VDC
0335
24VDC

0337SOL
0337CAB
0339SOL

CARD 5 (SLOT 4)
D07
D08
24V
0V
750-512

0355SOL
0355CAB
0357SOL

CARD 6 (SLOT 5)
D09
D010
24V
0V
750-512

0400

0VDC
0335
0VDC

2PT RELAY OUTPUT
BANK 01
LIFT CONTROL

BANK 01
LIFT CONTROL

2PT RELAY OUTPUT
BANK 02
LIFT CONTROL

BANK 02
LIFT CONTROL

0400

TROJANUV
3020 GORE ROAD, LONDON, ONTARIO, CANADA, N5V 4T7
COPYRIGHT © TROJAN TECHNOLOGIES, 2023 . ALL RIGHTS RESERVED.

DESCRIPTION: WD, UVSIGNA HSC 2
EL CENTRO, CA

REVISED BY	MJU	DWG NO.	REV
CHECKED BY	LG	E810206H2	A
APPROVED BY	HM		
APPROVAL DATE YYYY-MM-DD	2023-03-30	SHEET 03 OF 06	SIZE D

0 0.5 1.0
1.0" ON ORIGINAL DWG
SCALE: NTS

24VDC
0371
24VDC

04 00
04 01
04 02
04 03
04 04
04 05
04 06
04 07
04 08
04 09
04 10
04 11
04 12
04 13
04 14
04 15
04 16
04 17
04 18
04 19
04 20
04 21
04 22
04 23
04 24
04 25
04 26
04 27
04 28
04 29
04 30
04 31
04 32
04 33
04 34
04 35

24VDC
0436

0401SOL
0401CAB
2 1

CARD 7 (SLOT 6)
D011 1
D012 5
24V 2
24V 6
0V 3
0V 7
4
8
750-512

0419SOL
0419CAB
3 1

0421SOL
2

CARD 8 (SLOT 7)
D013 1
D014 5
24V 2
24V 6
0V 3
0V 7
4
8
750-512

0VDC
0371
0VDC

2PT RELAY OUTPUT

BANK 03
WIPER CONTROL

2PT RELAY OUTPUT

BANK 03
LIFT CONTROL

BANK 03
LIFT CONTROL

0VDC
0436

+24VDC
0435
24VDC

04 36
04 37
04 38
04 39
04 40
04 41
04 42
04 43
04 44
04 45
04 46
04 47
04 48
04 49
04 50
04 51
04 52
04 53
04 54
04 55
04 56
04 57
04 58
04 59
04 60
04 61
04 62
04 63
04 64
04 65
04 66
04 67
04 68
04 69
04 70
04 71

24VDC
0500

0VDC
0435
0VDC

0VDC
0500

TROJANUV
3020 GORE ROAD, LONDON, ONTARIO, CANADA, N5V 4T7
COPYRIGHT © TROJAN TECHNOLOGIES, 2023 . ALL RIGHTS RESERVED.

DESCRIPTION: WD, UVSIGNA HSC 2
EL CENTRO, CA

REVISED BY	MJU	DWG NO.	REV
CHECKED BY	LG	E810206H2	A
APPROVED BY	HM		
APPROVAL DATE YYYY-MM-DD	2023-03-30	SHEET 04 OF 06	SIZE D

0 0.5 1.0
1.0" ON ORIGINAL DWG
SCALE: NTS

+24VDC
0471

24VDC

0501HP
(BN) (BK)
(BU)

0503LS
(1) (2)
(4)

24VDC /16AWG — 0255CON (13) (14) — DI3 /16AWG

24VDC /16AWG — EXT RET / SEQ — 0X0 N.C.–C(2) — 0507SS (1) — DI4 /16AWG

24VDC /16AWG — 00X N.O.–L(4) (3) — DI5 /16AWG

24VDC /16AWG — WIPE / LIFT — 0X N.O.–R(4) — 0511SS (3) — DI6 /16AWG

CARD 9 (SLOT 8)

DI1	1	WIPER HIGH PRESSURE
DI2	5	HYDRAULIC FLUID LOW LEVEL
DI3	2	PUMP ON
DI4	6	LOCAL EXTEND
DI5	3	LOCAL SEQUENCE
DI6	7	LIFT
DI7	4	
DI8	8	

750-430

0VDC
0471

0VDC
8PT INPUT
WIPER HIGH PRESSURE
HYDRAULIC FLUID LOW LEVEL
PUMP ON
LOCAL EXTEND
LOCAL SEQUENCE
LIFT

CARD 10 (SLOT 9)

24VDC /16AWG — OFF / UP / DOWN — XOO N.O.–R(4) — 0519SS (3) — DI9 /16AWG

24VDC /16AWG — 00X N.O.–L(4) (3) — DI10 /16AWG

24VDC /16AWG — REMOTE OFF / LOC — 00X N.O.–L(4) — 0523SS (3) — DI11 /16AWG

24VDC /16AWG — 0X0 N.C.–C(2) (1) 2 1 3 4 — DI12 /16AWG

24VDC /16AWG — X000 N.O.–CT(4) — 0527SS (3) — DI13 /16AWG

24VDC /16AWG — REMOTE OFF / LOC — 00X N.O.–L(4) — 0529SS (3) — DI14 /16AWG

24VDC /16AWG — 0X0 N.C.–C(2) (1) 2 1 3 4 — DI15 /16AWG

24VDC /16AWG — 0XOO N.O.–CB(4) — 0527SS (3) — DI16 /16AWG

CARD 10 (SLOT 9)

DI9	1	8PT INPUT LIFT UP
DI10	5	LIFT DOWN
DI11	2	BANK 01 LOCAL
DI12	6	BANK 01 REMOTE
DI13	3	BANK 01 LIFT
DI14	7	BANK 02 LOCAL
DI15	4	BANK 02 REMOTE
DI16	8	BANK 02 LIFT

750-430

24VDC

0536

24VDC
0535

24VDC

24VDC /16AWG — REMOTE OFF / LOC — 00X N.O.–L(4) — 0537SS (3) — DI17 /16AWG

24VDC /16AWG — 0X0 N.C.–C(2) (1) 2 1 3 4 — DI18 /16AWG

24VDC /16AWG — 00X0 N.O.–T(4) — 0527SS (3) — DI19 /16AWG

CARD 11 (SLOT 10)

DI17	1	
DI18	5	
DI19	2	
DI20	6	
DI21	3	
DI22	7	
DI23	4	
DI24	8	

750-430

24VDC

0536

0VDC
0535

0VDC
8PT INPUT
BANK 03 LOCAL
BANK 03 REMOTE
BANK 03 LIFT

NODE ADDRESS
BIT ONE

HSC	BIT 2	BIT 1	NODE ID
1	0	0	10
2	0	1	20
3	1	0	30
4	1	1	40

BIT TWO

0VDC

TROJANUV
3020 GORE ROAD, LONDON, ONTARIO, CANADA, N5V 4T7
COPYRIGHT © TROJAN TECHNOLOGIES, 2023 . ALL RIGHTS RESERVED.

DESCRIPTION: WD, UVSIGNA HSC 2
EL CENTRO, CA

REVISED BY	MJU	DWG NO.	REV
CHECKED BY	JG	E810206H2	A
APPROVED BY	HM		
APPROVAL DATE YYYY-MM-DD	2023-03-30	SHEET 05 OF 06	SIZE D

0 0.5 1.0
1.0" ON ORIGINAL DWG
SCALE: NTS

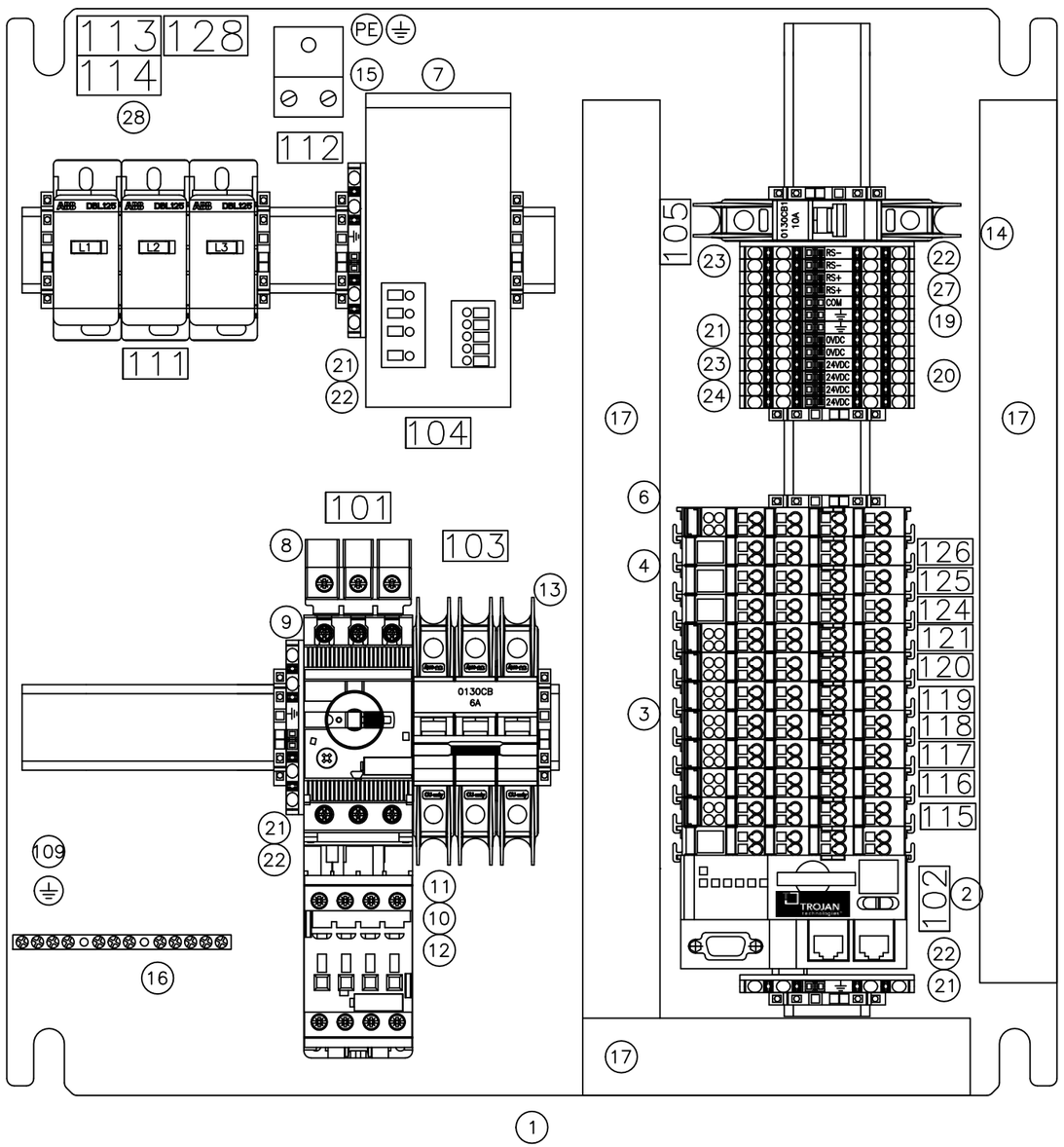

ITEM	QTY	DESCRIPTION	MANUFACTURER	PART NUMBER	TROJAN NUMBER
128	1	EMLP (27x12.5)	MAIN FEED	75C WIRE	
127					
126	1	EMLP (27x12.5)	DI3		
125	1	EMLP (27x12.5)	DI2		
124	1	EMLP (27x12.5)	DI1		
123					
122					
121	1	EMLP (27x12.5)	DO7		
120	1	EMLP (27x12.5)	DO6		
119	1	EMLP (27x12.5)	DO5		
118	1	EMLP (27x12.5)	DO4		
117	1	EMLP (27x12.5)	DO3		
116	1	EMLP (27x12.5)	DO2		
115	1	EMLP (27x12.5)	DO1		
114	1	EMLP (45x25)	INCOMING SUPPLY	480V 60 HZ	
113	1	EMLP (45x25)	ALL FIELD WIRING	USE COPPER	CONDUCTORS ONLY
112	1	EMLP (27x12.5)	TORQUE	50 lb.in	
111	1	EMLP (27x12.5)	TORQUE	31–44 lb.in	
110	1	US–EML (D12.5)	PE		
109	2	US–EML (D12.5)	⏚		
108					
107					
106					
105	1	EMLP (27x12.5)	0130CB1	10A PS	
104	1	EMLP (27x12.5)	0130PS	24VDC	
103	1	EMLP (27x12.5)	0130CB	POWER SUPPLY	
102	1	EMLP (27x12.5)	0215CNTLR	CONTROLLER	
101	1	EMLP (27x12.5)	0120MCB	MOTOR STARTER	
100					
36	1	CABLE ASSY, HSC G4 RS485	CUSTOM	917750	917750
35					
34					
33					
32					
31					
30					
29					
NOTE 1 → 28	3	DIST BLOCK, 125A ABB	ABB	DBL125	917305–125
NOTE 2 → 27	1	RESISTOR, 2200HM 1/4WATT	––	––	917835
26	1	RESISTOR, 120ohm DNET	––	––	913840
25	A/R	TERM BLK, END STOP CLIPFIX 35	PHOENIX CONTACT	3022276	916050–3022276
24	1	TERM BLK, JUMPER 4P FBS 4 5	PHOENIX CONTACT	3030187	916050–3030187
23	3	TERM BLK, JUMPER 2P FBS 2 5	PHOENIX CONTACT	3030161	916050–3030161
22	4	TERM BLK, END PLT D ST 2.5 QU	PHOENIX CONTACT	3030514	916050–3030514
21	5	TERM BLK, PIT 2.5 PE QUAT GND	PHOENIX CONTACT	3209594	916049–3209594
20	6	TERM BLK, PIT 2.5 QUATTRO BLU	PHOENIX CONTACT	3209581	916049–3209581
19	5	TERM BLK, PIT 2.5 QUATTRO GRY	PHOENIX CONTACT	3209578	916049–3209578
18	A/R	TERM BLK, DIN RAIL PERF 35X7.5	PHOENIX CONTACT	0801733	914147
17	A/R	WIRE DUCT, TYPE F LT GRY 1x3	PANDUIT	F1X3LG6 / C1LG6	913437–004
16	1	GROUND BAR, 12 TAP	T&B	35610203	917380–012BLU
NOTE 1 → 15	1	LUG, GND 2CON 600V 1/0–14AWG	BLACKBURN	ADR11–21	917397–1121
14	1	BREAKER, 10A 1P AC/DC C ABB	ABB	SU201M–C10	917139–MC1100
13	1	BREAKER, 6A 3P AC/DC C ABB	ABB	SU203M–C6	917139–MC3060
12	1	STARTER, AUXILIARY CONTACT	ABB	MS132–HKF1–11	917182–HKF111
11	1	STARTER, COUPLING LINK	ABB	BEA16–4	917182–BEA164
10	1	CONTACTOR, AF09 25A 1NO 24V	ABB	AF09–30–10–11	917180–09A024
9	1	STARTER, MS132 2.50A	ABB	MS132–2.5	917182–MS132G
8	1	STARTER, POWER IN FEED 3 PHASE	ABB	MS132–S1–M3–25	917182–S1M325
7	1	PS, 24VDC 3P TRIO 10A	PHOENIX CONTACT	2866459	916051–459
6	1	END MODULE	WAGO	750–600	916554–600
5					
4	3	DI 8CH 24VDC	WAGO	750–430	916554–430
3	7	DO 2CH RELAY	WAGO	750–512	916554–512
2	1	CONTROLLER, 8102T ENET RS485	CUSTOM	916554–8102T	916554–8102T
1	1	BACKPLATE, HSC G4 ELEC	CUSTOM	CUSTOM	900041

NOTE:

1. ACCORDING TO UL 508A, SECTION 54, ALL FIELD WIRING CONDUCTORS, EXTERNAL TO THE PANEL SHALL BE "COPPER CONDUCTORS ONLY" AND TEMPERATURE RATINGS FOR THE FIELD WIRING CONDUCTORS RATED LESS THAN 100 AMPS SHALL BE 75°C (167°F). REFER THE FOLLOWING BELOW MENTIONED DETAILS FOR FIELD WIRING TERMINATION TIGHTENING TORQUE.
   A. GROUND LUG 5.65 N–m (50 lb–in).
   B. DISTRIBUTION BLOCK 3.5– 5 N–m (30.97 – 44.25 lb–in).
2. USE 220 OHM RESISTOR AS SHOWN IN WIRING DIAGRAM, IN CASE OF COMMUNICATION FAILURE USE 120 OHM RESISTOR (INCLUDED IN BOM ITEM# 26).

TROJANUV
3020 GORE ROAD, LONDON, ONTARIO, CANADA, N5V 4T7
COPYRIGHT © TROJAN TECHNOLOGIES, 2023 . ALL RIGHTS RESERVED.

DESCRIPTION: WD, UVSIGNA HSC 2 EL CENTRO, CA
REVISED BY MJU
CHECKED BY LG
APPROVED BY HM
APPROVAL DATE YYYY–MM–DD 2023–03–30
DWG NO. E810206H2
REV A
SHEET 06 OF 06
SIZE D
SCALE: NTS
1.0" ON ORIGINAL DWG

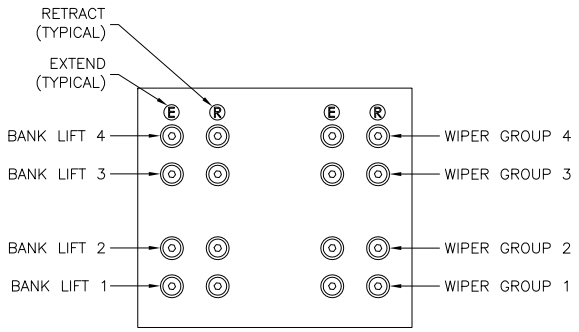

DETAIL A

SCALE: NOT TO SCALE

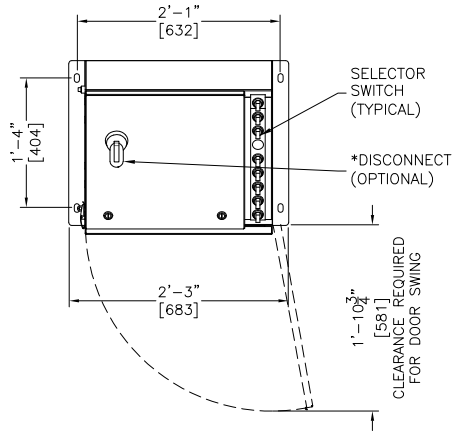

PLAN VIEW

SCALE: NOT TO SCALE

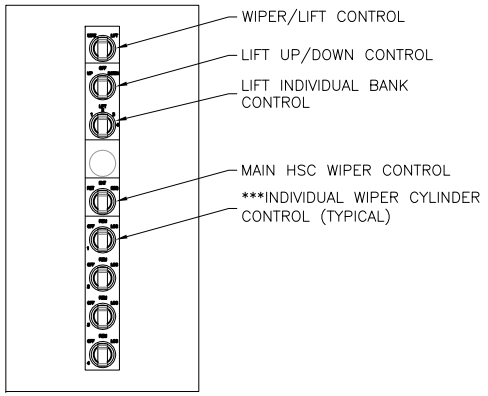

DETAIL B

SCALE: NOT TO SCALE

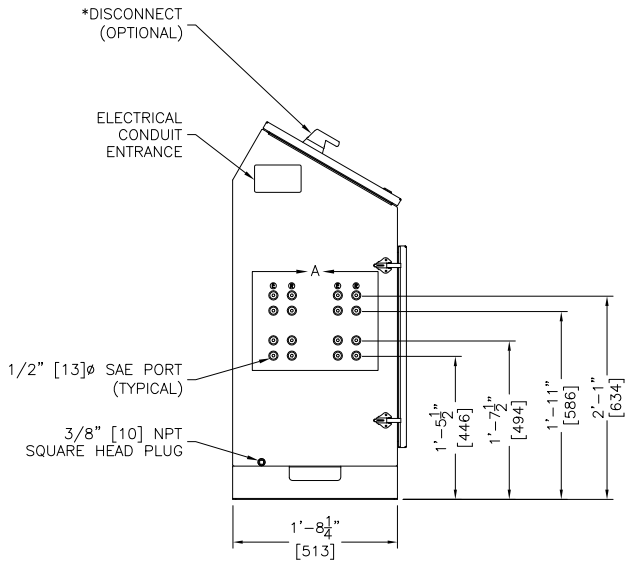

LEFT VIEW

SCALE: NOT TO SCALE

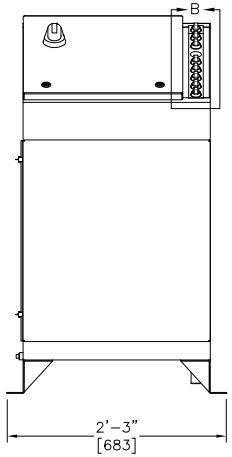

FRONT VIEW

SCALE: NOT TO SCALE

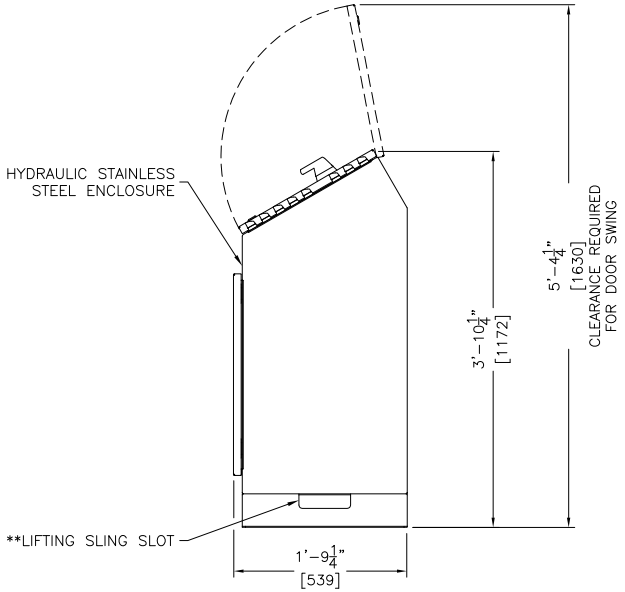

RIGHT VIEW

SCALE: NOT TO SCALE

NOTES:

: HYDRAULIC SYSTEM CENTER (HSC) TO BE 304 SST OR 316 SST (OPTIONAL)
: HSC WEIGHT 310 lbs. [141 kg]
* DISCONNECT WILL BE PROVIDED ON CE VERSION OR AVAILABLE AS AN OPTION ON UL VERSION.
** LIFTING SLING SLOT NOT FOR USE WITH LIFT CART OR LIFT TRUCK.
*** NOTE: THE NUMBER OF INDIVIDUAL WIPER CYLINDER CONTROL SWITCHES WILL VARY DEPENDING ON THE NUMBER IF BANKS. UNUSED PORTS TO BE SEALED BY TROJAN.

[ ] INDICATES mm UNLESS OTHERWISE SHOWN.

TROJANUV
A TROJAN TECHNOLOGIES BUSINESS

CONFIDENTIALITY NOTICE
Copyright@ 2017 by Trojan Technologies. All rights reserved. No part of this document may be reproduced, stored in a retrieval system, or transmitted in any form, without the written permission of Trojan Technologies.

DESCRIPTION: STD, TROJANUVSIGNA HYDRAULIC SYSTEM CENTER (HSC) G4 ASSEMBLY			
DRAWN BY :	SAH/MVW	DATE :	17SE21
CHECKED BY :	MMB	DATE :	17SE21
APPROVED BY :	CHB	DATE :	17SE21
SCALE (8.5x11) :	NOT TO SCALE	LOG NUMBER :	N/A

STD. DRAWING NO.	
SG0024	
REFERENCE NO.	
907717C	
DWG NO.	REV.
D01	C

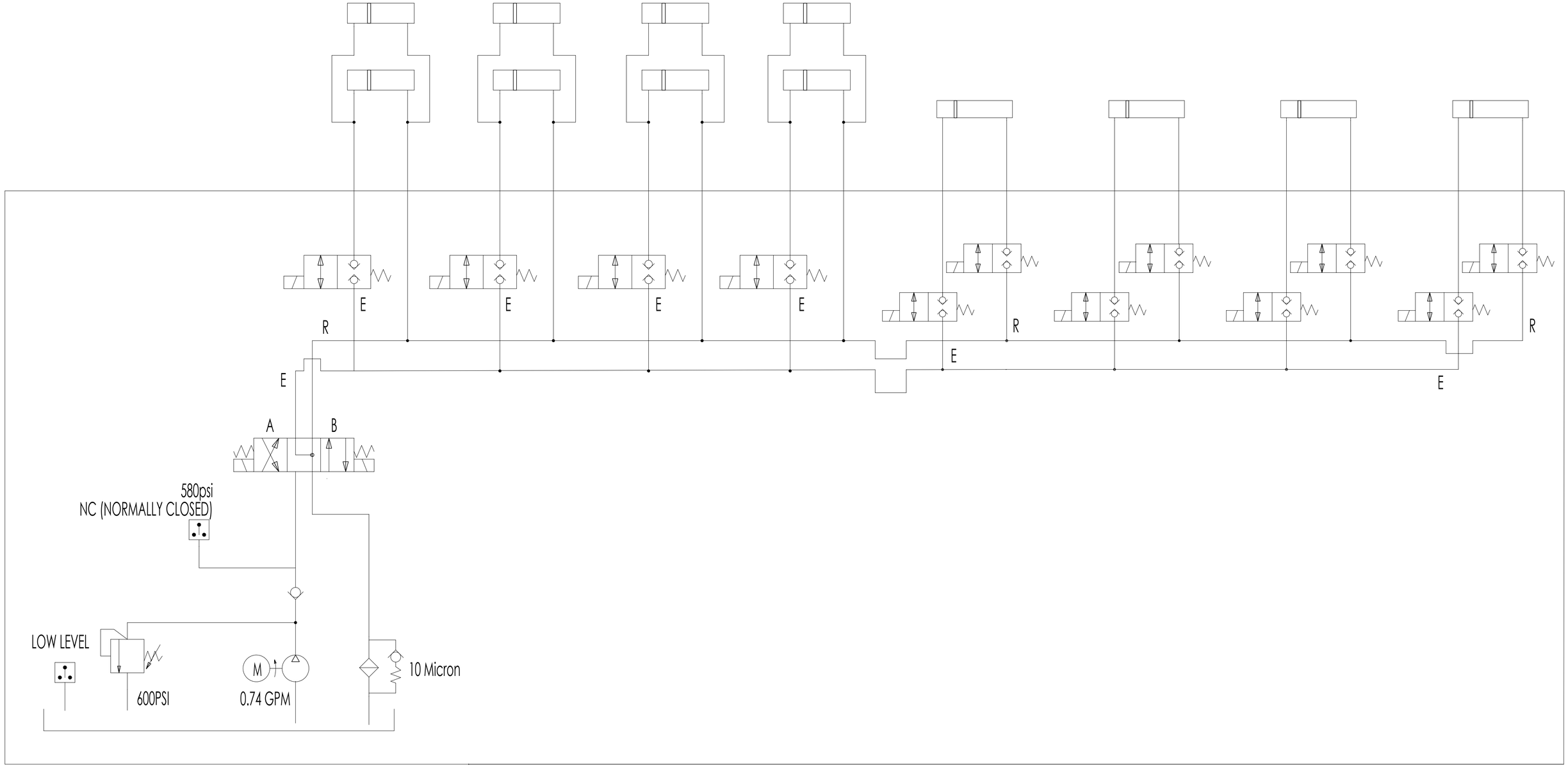

UVSIGNA 2 ROW GEN 2- 4 BANKS WIPER/LIFT HYDRAULIC DIAGRAM

UNLESS OTHERWISE SPECIFIED:
DO NOT SCALE DRAWING

INTERPRET DIMENSIONS AND TOLERANCES PER ASME Y14.5M-2009

DIMENSIONS ARE IN INCHES

TOLERANCES APPLY AS SHOWN BELOW:
2 PL DEC ± 0.01
3 PL DEC ± 0.005
ANGLE ± 1.0

REMOVE ALL BURRS. ALL CORNERS R 0.010" OR BREAK EDGE. ⊞ CRITICAL CHARACTERISTIC

THIRD ANGLE PROJECTION

COPYRIGHT BY TROJAN TECHNOLOGIES, 2022. ALL RIGHTS RESERVED.

SolidWorks MAINTAINED DATA CHANGES SHALL BE INCORPORATED ELECTRONICALLY

TROJAN technologies

TROJANUV Aquafine VIQUA sciencetech

3020 GORE RD, LONDON, ONTARIO, CANADA, N5V-4T7

DESCRIPTION: HSC, G4

DRAWN BY	SML	DWG NO. 907717C	REV AA
CREATED ON	2013-01-21		
RELEASE LOG #	12-926	MASS: 0.00 lbs	SCALE 1:3	SHEET 15 OF 16	SIZE D

Miniature Circuit Breaker SU200M
for branch circuit protection acc. to UL 489

The miniature circuit breaker SU 200 M is ABB's solution for UL 489 branch circuit protection up to 480 Y/277 V AC and 96 V DC. This circuit breaker is an all-round device for AC and DC applications for universal use in North American and global markets due to its approvals acc. to the international standards UL, CSA and IEC. Moreover, SU 200 M is fully compatible with System pro *M* compact® UL 489 accessories.

Features

- High performance MCB with 10 kA interrupting capacity acc. to UL 489 / CSA 22.2 No. 5 and 15 kA breaking capacity acc. to IEC/EN 60947-2
- Certified up to I_n = 40 A at 480 Y/277 V AC acc. to UL 489 / CSA 22.2 No. 5
- Certified for AC and DC use acc. to UL and CSA
- 40 °C reference temperature acc. to UL and CSA
- Current limiting acc. to UL 489
- Clear contact position indication in red/green ("real CPI")

Standards and approvals

Standards	
UL 489	
CSA 22.2 No. 5	
IEC/EN 60947-2	
Approvals	
UL 489	US
CSA 22.2 No. 5	CA
VDE	DE
CCC	CN

General Data		
Standards		UL 489, CSA 22.2 No. 5, IEC/EN 60947-2
Poles		1P, 2P, 3P, 4P
Tripping characteristics		C, K, Z
Rated current I_n		0.2 - 63 A
Rated frequency f		50 / 60 Hz, DC (0 Hz)
Rated insulation voltage U_i acc. to IEC/EN 60664-1		250 V AC (phase to ground), 440 V AC (phase to phase)
Overvoltage category		III
Pollution degree		3
IEC/EN 60947-2		
Rated operational voltage U_e		1P: 230 V AC; 2P, 3P, 4P: 400 V AC
Max. power frequency recovery voltage U_{max}	AC	1P: 253 V AC; 2P, 3P, 4P: 440 V AC
Min. operating voltage		12 V AC, 12 V DC
Rated ultimate short-circuit breaking capacity I_{cu}		15 kA
Rated service short-circuit breaking capacity I_{cs}		≤ 40 A: 11.25 kA > 40 A: 7.5 kA
Rated impulse withstand voltage U_{imp} (1.2/50µs)		4 kV (test voltage 6.2 kV at sea level, 5 kV at 2,000 m)
Dielectric test voltage		2 kV (50 / 60Hz, 1 min.)
Reference temperature for tripping characteristics		30 °C
Electrical endurance		I_n < 30 A: 20,000 ops (AC), I_n ≥ 30 A: 10,000 ops. (AC); 1 cycle (2 s - ON, 13 s - OFF, I_n ≤ 32 A), 1 cycle (2 s - ON, 28 s - OFF, I_n > 32 A)
UL / CSA		
Rated voltage	AC	1P: 277 V AC up to 40 A for C, Z char.,
	AC	277 V AC up to 35 A for K char., 240 V AC
	AC	2P, 3P, 4P: 480 Y / 277 V AC up to 40 A for C, Z char.,
	AC	480 Y / 277 V AC up to 35 A for K char., 240 V AC
	DC	1P: 48 V DC; 2P: 96 V DC (2p in series)
Rated interrupting capacity acc. to UL 1077		–
Short-circuit current rating acc. to UL 489		10 kA
Application		–
Reference temperature for tripping characteristics		40 °C
Electrical endurance		6,000 ops (AC), 6,000 ops. (DC); 1 cycle (1 s - ON, 9 s - OFF)
Mechanical data		
Housing		Insulation group II, RAL 7035
Toggle		Insulation group II, black, sealable
Contact position indication		Real CPI (green OFF / red ON)
Protection degree acc. to DIN EN 60529		IP20*, IP40 in enclosure with cover
Mechanical endurance		20,000 ops.
Shock resistance acc. to IEC/EN 60068-2-27		25 g - 2 shocks - 13 ms
Vibration resistance acc. to IEC/EN 60068-2-6		5g - 20 cycles at 5…150…5 Hz with load 0.8 I_n
Environmental conditions (damp heat cyclic) acc. to IEC/EN 60068-2-30		28 cycles with 55°C/90-96% and 25°C/95-100%
Ambient temperature		-25 ... +55°C
Storage temperature		-40 ... +70 °C
Installation		
Terminal		Failsafe bi-directional cylinder-lift terminal
Cross-section of conductors (top/bottom)		solid, stranded: 35 mm² / 35 mm² flexible: 25 mm² / 25 mm² 18 – 4 AWG
Cross-section of busbars (top/bottom)		10 mm² / 10 mm² 18 – 8 AWG
Torque		2.8 Nm AWG 18-16: 13.3 in-lbs. AWG 14-10: 17.7 in-lbs. AWG 8-4: 39.8 in-lbs.
Screwdriver		No. 2 Pozidrive
Mounting		On DIN rail 35 mm acc. to EN 60715 by fast clip
Mounting position		any
Supply		optional
Dimensions and weight		
Mounting dimensions acc. to DIN 43880		Mounting dimension 3
Pole dimensions (H x D x W)		111 x 69 x 17.5 mm
Pole weight		approx. 125 g
Combination with auxiliary elements		
Auxiliary contact		Yes
Signal contact		Yes
Shunt trip		Yes

Tripping characteristics

Acc. to	Tripping characte-ristics	Rated current	Thermal release [1]			Electromagnetic release [2]		
			Currents: conventional non-tripping current	conventional tripping current	Tripping time	Range of instantaneous tripping		Tripping time
		I_n	I_1	I_2				
IEC/EN 60947-2	C	0.5 to 63 A	$1.05 \cdot I_n$	$1.3 \cdot I_n$	> 1 h < 1 h [3]	$5 \cdot I_n$	$10 \cdot I_n$	> 0.2 s < 0.2 s
	K	0.2 to 63 A	$1.05 \cdot I_n$	$1.3 \cdot I_n$	> 1 h < 1 h [3]	$10 \cdot I_n$	$14 \cdot I_n$	> 0.2 s < 0.2 s
	Z	0.5 to 63 A	$1.05 \cdot I_n$	$1.3 \cdot I_n$	> 1 h < 1 h [3]	$2 \cdot I_n$	$3 \cdot I_n$	> 0.2 s < 0.2 s

[1] The thermal releases are calibrated to a nominal reference ambient temperature of 30 °C.
In the case of higher ambient temperatures, the current values fall by approx. 6 % for each 10 K temperature rise.

[2] The indicated tripping values of electromagnetic tripping devices apply to a frequency of 50/60 Hz. The thermal release operates independent of frequency.

[3] As from operating temperature (after I_1 > 1h)

C characteristic

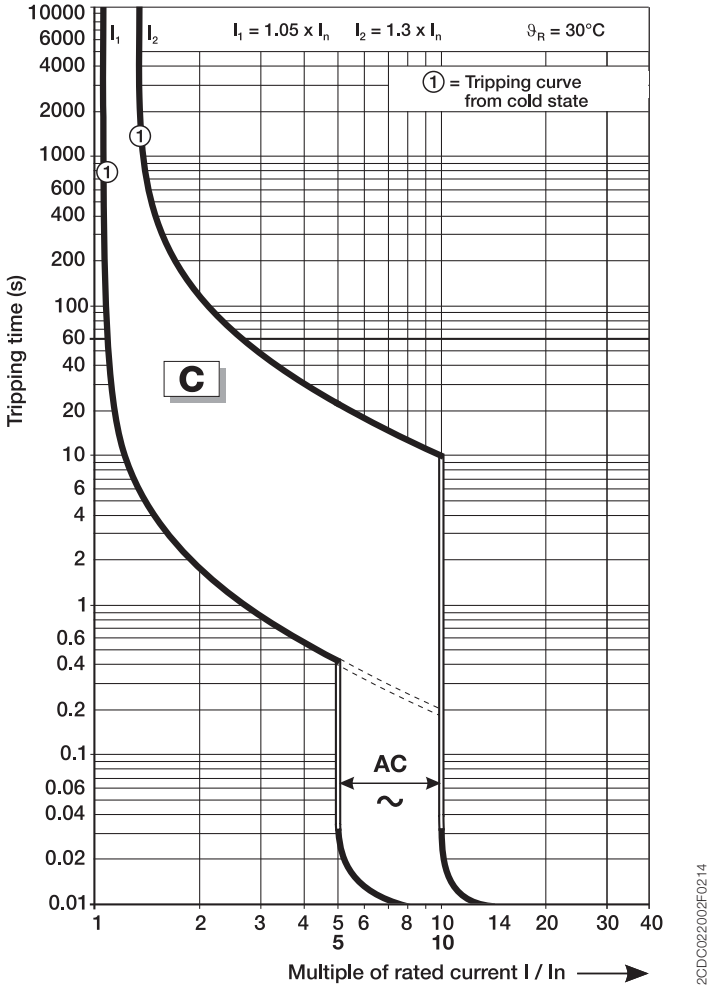

2CDC022002F0214

K characteristic

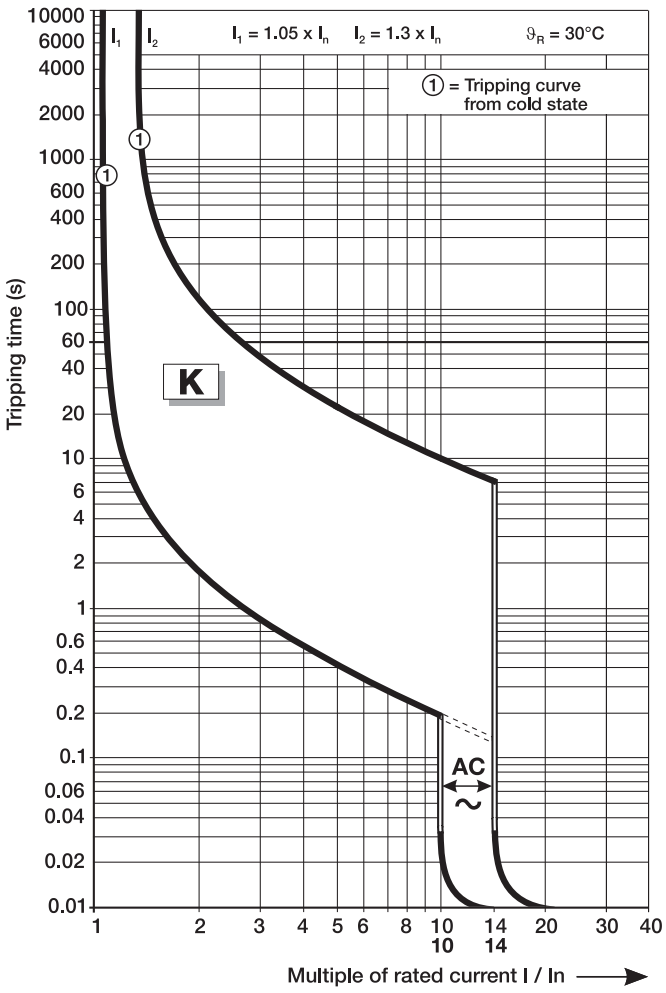

Z characteristic

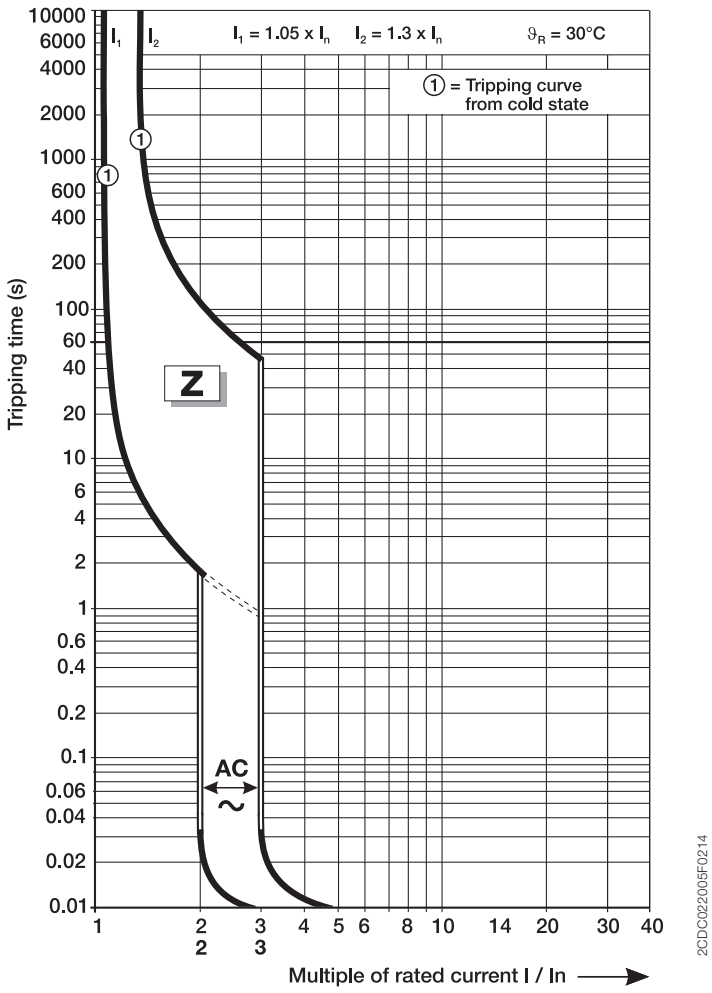

Type	Voltage	Current	Power Factor	Phase	I_{peak}	I^2t
		A			kA	kA^2S
SU203M-K0.2	480Y/277	10000	0.45-0.5	3	0.026	0.008
SU203M-K7	480Y/277	4095	0.45-0.5	3	2.3	11.9
SU203M-K7	480Y/277	7500	0.45-0.5	3	3.4	16.7
SU203M-K7	480Y/277	10000	0.45-0.5	3	4.6	19.0
SU203M-K20	480Y/277	4095	0.45-0.5	3	2.9	18.1
SU203M-K20	480Y/277	7500	0.45-0.5	3	4.3	28.1
SU203M-K20	480Y/277	10000	0.45-0.5	3	6.4	34.6
SU203M-K35	480Y/277	4095	0.45-0.5	3	3.4	27.9
SU203M-K35	480Y/277	7500	0.45-0.5	3	4.7	33.1
SU203M-K35	480Y/277	10000	0.45-0.5	3	9.0	72.0
SU203M-C40	480Y/277	4095	0.45-0.5	3	3.4	22.8
SU203M-C40	480Y/277	7500	0.45-0.5	3	5.1	42.5
SU203M-C40	480Y/277	10000	0.45-0.5	3	9.3	74.6
SU201M-K0.2	277	10000	0.45-0.5	1	0.7	0.092
SU201M-K7	277	4095	0.45-0.5	1	2.5	10.5
SU201M-K7	277	7500	0.45-0.5	1	3.4	16.9
SU201M-K7	277	10000	0.45-0.5	1	3.4	14.5
SU201M-K20	277	4095	0.45-0.5	1	2.8	14.7
SU201M-K20	277	7500	0.45-0.5	1	4.1	23.5
SU201M-K20	277	10000	0.45-0.5	1	4.7	32.5
SU201M-K35	277	4095	0.45-0.5	1	3.0	19.8
SU201M-K35	277	7500	0.45-0.5	1	4.7	36.5
SU201M-K35	277	10000	0.45-0.5	1	4.4	22.1
SU201M-C40	277	4095	0.45-0.5	1	3.6	22.9
SU201M-C40	277	7500	0.45-0.5	1	5.3	52.6
SU201M-C40	277	10000	0.45-0.5	1	5.9	44.9
SU203M-K63	240	4095	0.45-0.5	3	3.6	19.9
SU203M-K63	240	7500	0.45-0.5	3	5.1	33.0
SU203M-K63	240	10000	0.45-0.5	3	6.3	43.3
SU201M-K63	240	4095	0.45-0.5	1	3.9	33.8
SU201M-K63	240	7500	0.45-0.5	1	5.2	43.8
SU201M-K63	240	10000	0.45-0.5	1	6.5	61.8

Accessory overview

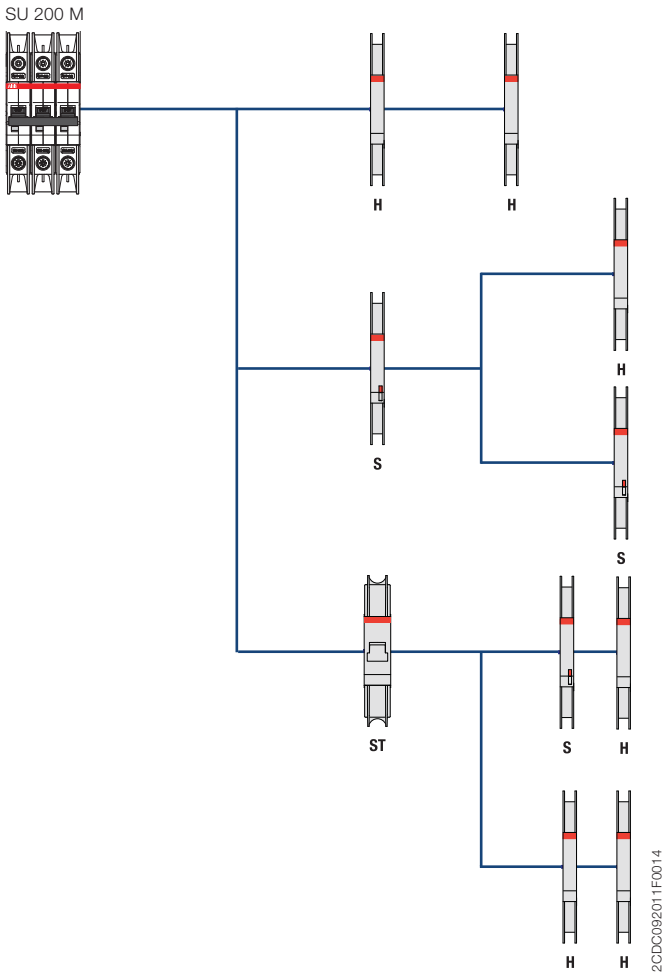

H	Auxiliary contact (change-over contact)	S2C-H6RU
S/H	Signal contact	S2C-S6RU
ST	Shunt trip	S2C-A...U

The certification of the Accessories has been done with one accessory only.

The number of electrical operations is limited to 4,000 operations for the maximum combinations and the combinations including shunt trips.

Dimensional drawing

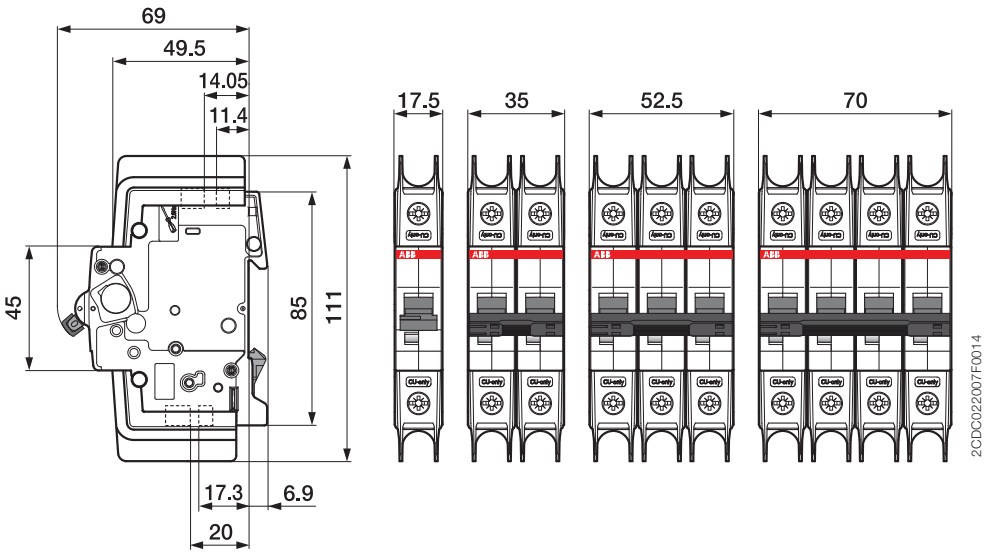

DBK INDUSTRIAL THERMAL MANAGEMENT

RFHSS Electromechanical Hygrostat

Technical Data		Features
Operating Voltage	24 - 230V AC	
Setting Range	40 - 90% RH	Exterior setting, fine adjustment knob
Sensor	Plastic fibres	
Switching Current		
Dehumidification	5 (0.2) A @24V, min 100mA	
Humidification	2 (0.2) A @ 24V, min 100mA	
Contact	1 Change-over	
Switching Differential	~5%RH	
Service Life	>100,000	
Protection Rating	IP30	
Protection Class	0 (protection class must be guaranteed by installation location)	
Connection Type	Screw terminals, 0.5 - 2.5mm²	
Mounting Type	DIN rail (35mm)	
Operating/Storage/Temperature	T60 (0...60°C) / (32...140°F)	
Housing	Plastic grey (RAL7035)	
Weight	Approx. 50g	
Approval/Marking	UL / CE	

Type	Setting Range	Switching Differential	Features	Scale
RFHSS 114.110	40 - 90%RH	~5%RH	1 Change-over	Blue

The information is subject to change without notice. Data is given for illustration purpose only and does not release the customer from independent application tests.

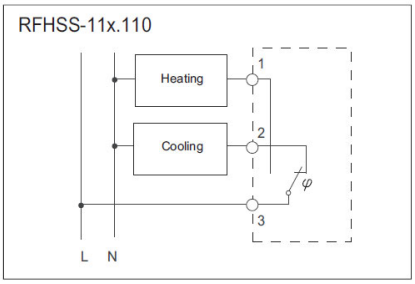

For more information regarding the RFHSS Hygrostat, please feel free to contact:

DBK USA, Inc.
212 Northeast Drive
Spartanburg, SC 29303

Phone: (864) 599-1600
Fax: (864) 578-6464
sales-us@dbk-group.com
www.dbk-group.com

VAL-MS 320 ST

Order No.: 2838843

http://eshop.phoenixcontact.ca/phoenix/treeViewClick.do?UID=2838843

Surge protection connector type 2 with high-capacity varistor for VAL-MS base element, thermal monitoring, visual fault warning. Design: 320 V AC

Commercial data	
EAN	4 017918 170813
Pack	1 pcs.
Customs tariff	85363030
Catalog page information	Page 39 (TT-2011)

Product notes

WEEE/RoHS-compliant since: May/03/2006

Please note that the data given here has been taken from the online catalog. For comprehensive information and data, please refer to the user documentation at http://www.download.phoenixcontact.com. The General Terms and Conditions of Use apply to Internet downloads.

Technical data

Standards

Housing material	PA
Inflammability class according to UL 94	V0
Color	black

Standards for air and creepage distances	DIN VDE 0110-1
	IEC 60664-1: 1992-10
	IEC 61643-1
Surge voltage category	III
Pollution degree	2
Degree of protection	IP20
Mounting type	On base element
Design	DIN rail module, two-section, divisible
Number of positions	1
Ambient temperature (operation)	-40 °C ... 80 °C
Arrester can be tested with CHECKMASTER from software version:	From SW rev. 1.10
Message: Surge protection fault	Optical
Direction of action	1L-N/PE
Width	17.70 mm
Height	54.50 mm
Length	52.40 mm
Pitch unit	1 Div.

Protective circuit

IEC category	II
	T2
EN type	T2
Nominal voltage U_N	230 V AC
	277 V AC
Arrester rated voltage U_C	335 V AC
U_T (TOV-proof)	415 V AC (5 s)
Nominal frequency f_N	50 Hz (60 Hz)
Ground conductor current I_{PE}	≤ 0.32 mA
Standby power consumption P_C	≤ 110 mW
Max. discharge surge current Imax (8/20) µs	40 kA
Nominal discharge surge current I_n (8/20) µs	20 kA
Lightning test current (10/350) µs, peak value I_{imp}	3 kA
Max. energy absorption (2 ms)	640 J
Protection level U_p	≤ 1.5 kV

Residual voltage	≤ 1.2 kV (at 5 kA)
	≤ 1.4 kV (at 15 kA)
	≤ 1.3 kV (at 10 kA)
	≤ 1.5 kV (at In)
	≤ 1.1 kV (at 3 kA)
Response time	≤ 25 ns
Max. required backup fuse with branch wiring	125 A (gL)
Short-circuit resistance I_P with max. backup fuse (effective)	25 kA
Capacity	2.3 nF (typical)

Standards

Standards/regulations	IEC 61643-1 1998
	DIN EN 61643-11 2002
	UL 1449 ed. 2
	IEEE C62.1 / C62.34 / C62.45

Certificates

Certification	CB, CCA, CUL, GL, GOST, KEMA, OEVE, UL

Additional products

Item	Designation	Description
General		
2817741	VAL-MS BE	Base element for type 2 arresters of the VALVETRAB MS series of products. Design: 1-channel
2817738	VAL-MS BE/FM	Base element for type 2 arresters of the VALVETRAB MS series of products, with remote indication contact. Design: 1-channel

Drawings

Dimensioned drawing

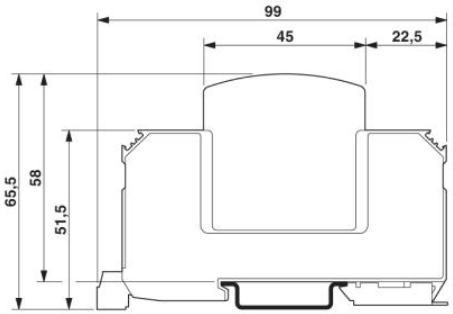

Circuit diagram

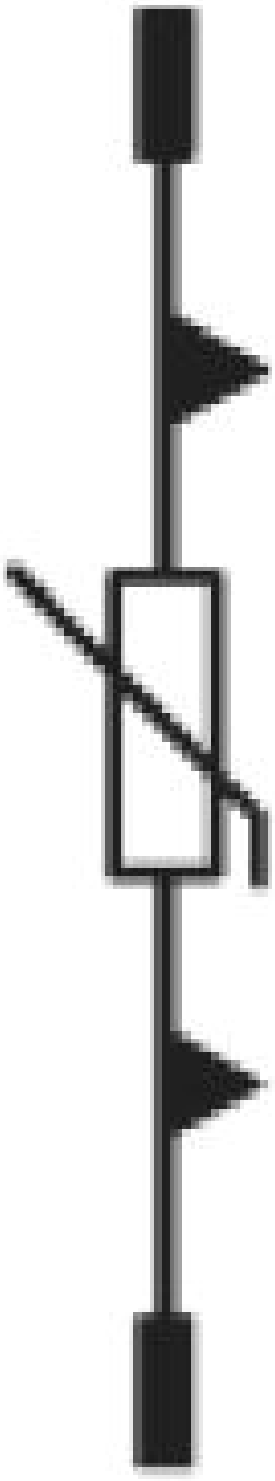

MPB 18/1- 3

Order No.: 2809212

The illustration shows the version MPB 18/1-6

http://eshop.phoenixcontact.ca/phoenix/treeViewClick.do?UID=2809212

Wiring bridge for modules with connecting pitch 17.5 mm, 1-phase, 3-pos.

Commercial data	
EAN	4 017918 076283
Pack	1 pcs.
Customs tariff	85369085
Catalog page information	Page 58 (TT-2011)

Product notes

WEEE/RoHS-compliant since: Jan/01/2005

Please note that the data given here has been taken from the online catalog. For comprehensive information and data, please refer to the user documentation at http://www.download.phoenixcontact.com. The General Terms and Conditions of Use apply to Internet downloads.

Technical data

General

Nominal current I_N	100 A
Housing material	Plastic
Design	Comb bridge
Number of positions	3
Length	55.20 mm
Color	gray

VAL-MS BE

Order No.: 2817741

The illustration shows the base element with remote indication contact

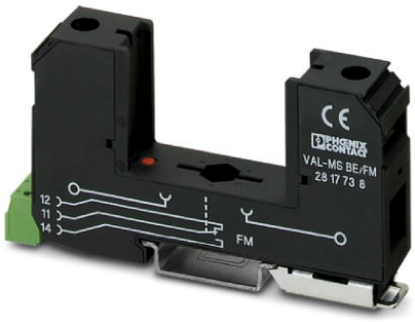

http://eshop.phoenixcontact.ca/phoenix/treeViewClick.do?UID=2817741

Base element for type 2 arresters of the VALVETRAB MS series of products. Design: 1-channel

Commercial data	
EAN	4 017918 148164
Pack	1 pcs.
Customs tariff	85363010
Catalog page information	Page 45 (TT-2011)

Product notes

WEEE/RoHS-compliant since: Nov/01/2005

Please note that the data given here has been taken from the online catalog. For comprehensive information and data, please refer to the user documentation at http://www.download.phoenixcontact.com. The General Terms and Conditions of Use apply to Internet downloads.

Technical data

Standards

Housing material	PA
Inflammability class according to UL 94	V0
Color	black
Degree of protection	IP20
Mounting type	DIN rail: 35 mm
Design	DIN rail module, two-section, divisible

Number of positions	1
Ambient temperature (operation)	-40 °C ... 80 °C
Altitude	max. 2000 m
Message: Surge protection fault	None
Width	17.70 mm
Height	52.00 mm
Length	90.00 mm
Pitch unit	1 Div.

Protective circuit

Nominal voltage U_N	500 V AC
Arrester rated voltage U_C	600 V AC
Nominal frequency f_N	50 Hz (60 Hz)
Max. required backup fuse with branch wiring	125 A (gL/gG)
Short-circuit resistance I_P with max. backup fuse (effective)	25 kA

Connection, protective circuit

Connection method	Biconnect terminal blocks
Connection type IN	Biconnect screw terminal block
Connection type OUT	Biconnect screw terminal block
Connection method	Biconnect terminal block
Screw thread	M5
Tightening torque	4.5 Nm
Stripping length	16 mm
Conductor cross section stranded min.	1.5 mm²
Conductor cross section stranded max.	25 mm²
Conductor cross section solid min.	1.5 mm²
Conductor cross section solid max.	35 mm²
Conductor cross section AWG/kcmil min.	15
Conductor cross section AWG/kcmil max	2

Standards

Standards/regulations	IEC 61643-1 2005
	EN 61643-11/A11 2007

Certificates

Certification	CB, CCA, CSA, CUL, GL, GOST, KEMA, OEVE, UL

Drawings

Dimensioned drawing

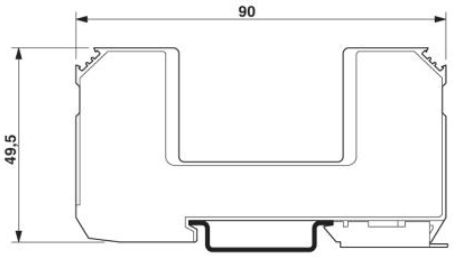

Circuit diagram

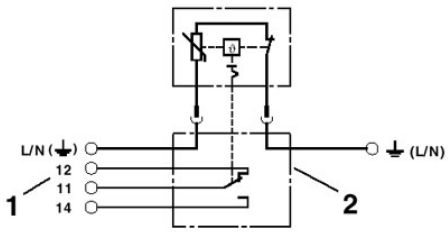

General Information

Extended Product Type:	DBL125
Product ID:	1SNL312510R0000
EAN:	3472599856585
Catalog Description:	DBL125 Distribution Terminal Blocks
Long Description:	- Save installation time with our modular solutions, - Ease the installation with plate or rail mounting options on our modular blocks, - Easily increase the number of outputs using jumpers.

Categories

Products » Low Voltage Products and Systems » Connection Devices » Terminal Blocks » Solution Series

Ordering

Minimum Order Quantity:	1 piece
Customs Tariff Number:	85369010
Color:	Grey

Dimensions

Product Net Height:	75 mm
Product Net Depth:	50.7 mm
Product Net Weight:	120 g
Product Net Width:	28.2 mm

Technical

Spacing:	28.2 mm
Connection Type:	Screw clamp
Function:	Feed-through
Connecting Capacity Main Circuit:	Screw Clamp / Rigid 1x 10 ... 35 mm²
Rated Current (I_n):	Main Circuit 125 A
Rated Short-time Withstand Current (I_{cw}):	for 1 s 4000 A
Pollution Degree:	3
Power Loss:	4 W
Degree of Protection:	acc. to IEC 60529, IEC 60947-1, EN 60529 Main Terminals IP20
Insulation Material:	Polyamide
Mounting on DIN Rail:	TH35-7.5 (35 x 7.5 mm Mounting Rail) acc. to IEC 60715 TH35-15 (35 x 15 mm Mounting Rail) acc. to IEC 60715
Tightening Torque:	Main Circuit 3.5 ... 5 N·m
Rated Cross-Section:	35 mm²

Technical UL/CSA

Connecting Capacity UL/CSA:	Stranded 2 AWG
Short-Circuit Current Rating (SCCR):	100 kA
Maximum Operating Voltage UL/CSA:	Main Circuit 1000 V

Environmental

RoHS Status:	Following EU Directive 2002/95/EC August 18, 2005 and amendment
Ambient Air Temperature:	Operation -55 ... +110 °C Storage -55 ... +110 °C

Certificates and Declarations (Document Number)

Instructions and Manuals:	1SNC166001B0201
CB Certificate:	1SND166005A0200
CSA Certificate:	1SND166007A0200
cUL Certificate:	1SND166006A0200
Data Sheet, Technical Information:	1SNC166013B0201
Declaration of Conformity - CE:	1SND225005U1000
EAC Certificate:	1SND161011A1100
RoHS Information:	1SND230557F0200

Classifications

ETIM 5:	EC000276 - Distribution terminal block
ETIM 6:	EC000276 - Distribution terminal block
Object Classification Code:	X

Container Information

Package Level 1 Width:	57 mm
Package Level 1 Length:	95 mm
Package Level 1 Height:	37 mm
Package Level 1 Gross Weight:	0.14 kg
Package Level 1 EAN:	3472599856585
Package Level 2 Units:	75 piece
Package Level 2 Width:	230 mm
Package Level 2 Length:	380 mm
Package Level 2 Height:	310 mm
Product Packing Type:	Box
Package Level 1 Units:	1 piece

KOA SPEER ELECTRONICS, INC.

CF

carbon film leaded resistors

EU RoHS COMPLIANT

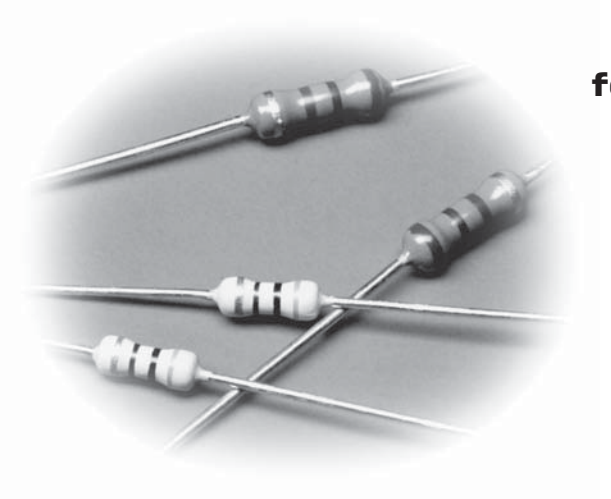

features

- Flameproof coating is available (specify “CFP”)
- Reduced body size (specify “CFS/CFPS”)
- Suitable for automatic machine insertion
- Marking: Beige body color with color-coded bands on CF
  Green body color with color-coded bands on CFP
  Ivory body color with color-coded bands on CFS1/4
- Products with lead-free terminations meet EU RoHS and China RoHS requirements

dimensions and construction

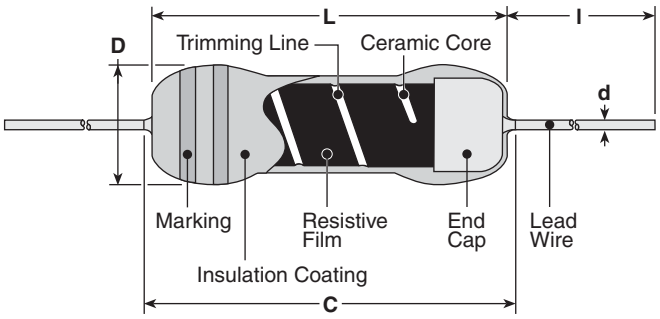

Type	Dimensions inches (mm) L	C (max.)	D	d (nom.)	l
CFS1/4 CFPS1/4	.126±.008 (3.2±0.2)	.134 (3.4)	.067±.008 (1.7±0.2)	.018 (0.45)	0.008 Min. (20.0 Min.)
CF1/4 CFP1/4	.240±0.2 (6.1±0.5)	.280 (7.1)	.092±.012 (2.3±0.3)	.024 (0.6)	
CF1/2 CFP1/2	.335±0.2 (8.5±0.5)	.374 (9.5)	.118±.012 (3.0±0.3)	.028 (0.7)	
CFS1/2 CFPS1/2	.248±.02 (6.3±0.5)	.280 (7.1)	.112±.012 (2.85±0.3)	.024 (0.6)	

ordering information

New Part #

CF	1/4	C	T52	R	103	J
Type	**Power Rating**	**Termination Material**	**Taping and Forming**	**Packaging**	**Nominal Resistance**	**Tolerance**
CF CFP	S1/4: 0.25W 1/4: 0.25W 1/2: 0.5W S1/2: 0.5W	C: SnCu	Axial: T26, T52, L52 Radial: VT, MT, MHT, VTP, VTE U Forming: U, UCL M Forming: M5, M10, M12.5 L Forming: L10, L12.5	A: Ammo R: Reel	2 significant figures + 1 multiplier “R” indicates decimal on value <10Ω	G: ±2% J: ±5%

For further information on packaging, please refer to Appendix C.

Specifications given herein may be changed at any time without prior notice. Please confirm technical specifications before you order and/or use.

KOA SPEER ELECTRONICS, INC.

applications and ratings

Part Designation	Power Rating @ 70°C	Minimum Dielectric Withstanding Voltage	T.C.R. (ppm/°C) +350 to -450	0 to -700	0 to -1000	0 to -1300	Resistance Range E-24 (G±2%)	Resistance Range E-24 (J±5%)	Absolute Maximum Working Voltage	Absolute Maximum Overload Voltage
CFS1/4	0.25W	300V	2.2Ω - 47kΩ	51kΩ - 100kΩ	110kΩ - 330kΩ	360kΩ - 1MΩ	10Ω - 330kΩ	2.2Ω - 1MΩ	250V	500V
CFPS1/4							10Ω - 100kΩ	2.2Ω - 1MΩ		
CF1/4		500V	2.2Ω - 100kΩ	110kΩ - 330kΩ	360kΩ - 1MΩ	1.1MΩ - 5.1MΩ	10Ω - 1MΩ	2.2Ω - 5.1MΩ	300V	600V
CFP1/4						—		2.2Ω - 1MΩ		
CF1/2*	0.50W	700V		110kΩ - 1MΩ	1.1MΩ - 2.2MΩ	2.4MΩ - 5.1MΩ		2.2Ω - 5.1MΩ	400V	800V
CFP1/2*					—	—		2.2Ω - 1MΩ		
CFS1/2			2.2Ω - 91kΩ	100kΩ - 1MΩ	1.1MΩ - 2.2MΩ	2.4MΩ - 5.1MΩ		2.2Ω - 5.1MΩ	350V	700V
CFPS1/2					—	—		2.2Ω - 1MΩ		

* Not recommended for new designs.

environmental applications

Derating Curve

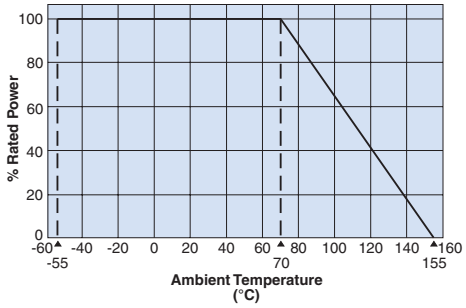

Surface Temperature Rise

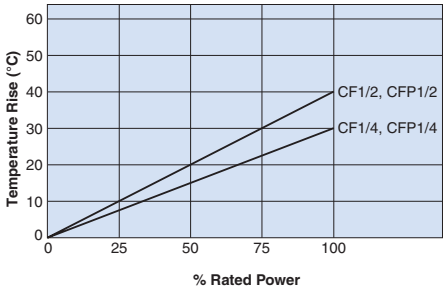

Load Life @ 70°C, 1000 Hr

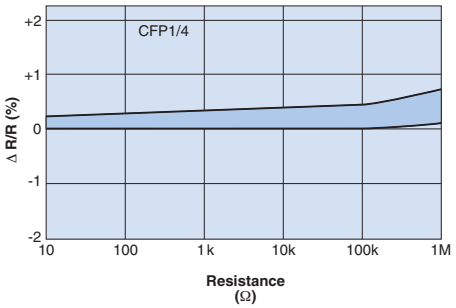

Performance Characteristics

Parameter	Requirement ΔR ±(% + 0.05Ω) Limit	Typical	Test Method
Resistance	Within specified tolerance	—	Measuring points are at 10mm ±1mm from the end cap.
T.C.R.	Within specified T.C.R.	—	Room temperature +100°C
Overload (Short time)	±1%	±0.5%	Rated voltage x 2.5 or max. overload voltage for 5 seconds, whichever is lower
Resistance to Solder Heat	±1%	±0.5%	260°C ±5°C, 10 seconds ± 1 second
Terminal Strength	No lead-coming off and loose terminals	—	Twist 360°C, 5 times
Rapid Change of Temperature	±1%	±0.5%	-55°C (30 minutes), +125°C (30 minutes), 5 cycles
Moisture Resistance	±5%	±2.5%	40°C ± 2°C, 90 - 95% RH, 1000 hours, 1.5 hr ON, 0.5 hr OFF cycle
Endurance at 70°C	±3%	±1.5%	70°C ± 2°C, 1000 hours, 1.5 hr ON, 0.5 hr OFF cycle

Specifications given herein may be changed at any time without prior notice. Please confirm technical specifications before you order and/or use.

HSC Item 25
Term Blk, End Stop Clipfix - Phoenix Contact 3022276 / Trojan P/N 916050-3022276

Snap-on end bracket, for NS 15 and NS 35 DIN rails

- Phoenix Contact has engineered its CLIPFIX end brackets to maintain a secure grip on the various DIN rail systems
- Design width of just 5.2 mm
- Parking facility for bridges and connectors
- Large area for labeling

End bracket for NS 15 DIN rail

End bracket for NS 35 DIN rail

	Technical data			Technical data		
Dimensions	Width	Length	Height	Width	Length	Height
[mm]	**5.2**	**22**	**22.6**	**5.15**	**48.5**	**35**
General data						
Material	PA			PA		
Inflammability class according to UL 94	V2			V2		

	Ordering data			Ordering data		
Description / Color	Type	Order No.	Pcs. / Pkt.	Type	Order No.	Pcs. / Pkt.
End bracket, for snapping onto NS 15, 5.2 mm wide, can be labeled with ZB 5 and ZBF 5, KLM, parking facilities for bridges and test accessories, gray	**CLIPFIX 15**	**3022263**	50			
End bracket, for snapping onto NS 35, 5.15 mm wide, can be labeled with ZB 5, parking facility for bridges and test plugs, gray				**CLIPFIX 35-5**	**3022276**	50
End bracket, for snapping onto NS 35, 9.5 mm wide, can be labeled with ZB 6, ZB 8/27, KLM..., gray				**CLIPFIX 35**	**3022218**	50

Screw-on end bracket, for NS 15 DIN rail

- With universal foot for NS 35 and NS 32 DIN rails
- High and low designs
- Large area for labeling

For NS 35 and NS 32 DIN rails

For multi-level terminal blocks on NS 35 and NS 32 DIN rails

	Technical data			Technical data		
Dimensions	Width	Length	Height	Width	Length	Height
[mm]	**9.5**	**50.5**	**35.3**	**10**	**55.5**	**50**
General data						
Material	PA			PA		
Inflammability class according to UL 94	V2			V2		

	Ordering data			Ordering data		
Description / Color	Type	Order No.	Pcs. / Pkt.	Type	Order No.	Pcs. / Pkt.
End bracket, for screwing on, for NS 35 and NS 32, can be labeled with ZB 6, KLM, KLM-A and UBE, gray	**E/UK**	**1201442**	50			
Universal end bracket, for screwing on, for NS 35 and NS 32, for supporting the ends of double-level and three-level terminal blocks, can be labeled with ZB 10, gray				**E/UK 1**	**1201413**	50

Extract from the online catalog

FBS 4-5

Order No.: 3030187

http://catalog.phoenixcontact.net/phoenix/treeViewClick.do?UID=3030187

Plug-in bridge, Number of positions: 4, Color: red

Commercial data	
EAN	4 017918 193829
sales group	A690
Pack	50 Pcs.
Customs tariff	85389099
Gross weight in pieces	0.00339 KG
Net weight per piece	0.0036 KG
Catalog page information	Page 472 (CAT-3-2013)

Product notes

WEEE/RoHS-compliant since: 01/01/2003

http://www.download.phoenixcontact.com
Please note that the data given here has been taken from the online catalog. For comprehensive information and data, please refer to the user documentation. The General Terms and Conditions of Use apply to Internet downloads.

Certificates / Approvals

Certification

Certifications applied for:

Certification Ex:

Extract from the online catalog

FBS 2-5

Order No.: 3030161

http://catalog.phoenixcontact.net/phoenix/treeViewClick.do?UID=3030161

Plug-in bridge, Number of positions: 2, Color: red

Commercial data	
EAN	4 017918 188511
sales group	A690
Pack	50 Pcs.
Customs tariff	85389099
Gross weight in pieces	0.001696 KG
Net weight per piece	0.001684 KG
Catalog page information	Page 390 (CL1-2011)

Product notes

WEEE/RoHS-compliant since: 01/01/2003

http://www.download.phoenixcontact.com
Please note that the data given here has been taken from the online catalog. For comprehensive information and data, please refer to the user documentation. The General Terms and Conditions of Use apply to Internet downloads.

Certificates / Approvals

Certification

Certifications applied for:

Certification Ex:

Extract from the online catalog

D-ST 2,5-QUATTRO

Order No.: 3030514

http://eshop.phoenixcontact.ca/phoenix/treeViewClick.do?UID=3030514

End cover, Length: 72 mm, Width: 2.2 mm, Height: 36.5 mm,
Color: gray

Commercial data	
EAN	4 017918 187972
Pack	1 pcs.
Customs tariff	85369010
Catalog page information	Page 95 (CL1-2011)

Product notes

WEEE/RoHS-compliant since:
Jan/01/2003

Please note that the data given here has been taken from the online catalog. For comprehensive information and data, please refer to the user documentation at http://www.download.phoenixcontact.com. The General Terms and Conditions of Use apply to Internet downloads.

Extract from the online catalog

PT 2,5-QUATTRO-PE

Order No.: 3209594

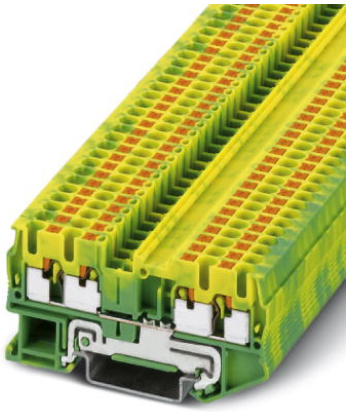

http://catalog.phoenixcontact.net/phoenix/treeViewClick.do?UID=3209594

Ground modular terminal block, Connection method: Push-in connection, Cross section: 0.14 mm² - 4 mm², AWG: 26 - 12, Width: 5.2 mm, Color: green-yellow, Mounting type: NS 35/7.5, NS 35/15

Commercial data	
EAN	4 046356 329842
sales group	A633
Pack	50 Pcs.
Customs tariff	85369010
Gross weight in pieces	0.01355 KG
Net weight per piece	0.01355 KG
Catalog page information	Page 97 (CL1-2011)

Product notes

WEEE/RoHS-compliant since: 11/22/2007

http://www.download.phoenixcontact.com
Please note that the data given here has been taken from the online catalog. For comprehensive information and data, please refer to the user documentation. The General Terms and Conditions of Use apply to Internet downloads.

Technical data

General

Number of levels	1
Number of connections	4
Color	green-yellow
Insulating material	PA

Inflammability class according to UL 94	V0

Dimensions

Width	5.2 mm
Length	72.2 mm
Height NS 35/7,5	36.8 mm
Height NS 35/15	44.3 mm

Technical data

Rated surge voltage	8 kV
Pollution degree	3
Surge voltage category	III
Insulating material group	I
Connection in acc. with standard	IEC 60947-7-2
Open side panel	ja
Shock protection test specification	DIN EN 50274 (VDE 0660-514):2002-11
Back of the hand protection	guaranteed
Finger protection	guaranteed
Test specification, oscillation, broadband noise	DIN EN 50155 (VDE 0115-200):2008-03
Test spectrum	Service life test category 1, class B, on vehicle body
Test frequency	f_1 = 5 Hz to f_2 = 150 Hz
ASD level	1.857 $(m/s^2)^2$/Hz
Acceleration	0.8 g
Test duration per axis	5 h
Test directions	X-, Y- and Z-axis
Oscillation, broadband noise test result	Test passed
Test specification, shock test	DIN EN 50155 (VDE 0115-200):2008-03
Shock form	Half-sine
Acceleration	5 g
Shock duration	30 ms
Number of shocks per direction	3
Test directions	X-, Y- and Z-axis (pos. and neg.)
Shock test result	Test passed
Temperature index, insulating material (DIN EN 60216-1 (VDE 0304-21))	125 °C
Static insulating material application in cold	-60 °C

Connection data

Conductor cross section solid min.	0.14 mm²
Conductor cross section solid max.	4 mm²
Conductor cross section AWG/kcmil min.	26
Conductor cross section AWG/kcmil max	12
Conductor cross section stranded min.	0.14 mm²
Conductor cross section stranded max.	2.5 mm²
Min. conductor AWG cross section, stranded	26
Max. AWG conductor cross section, stranded	14
Conductor cross section stranded, with ferrule without plastic sleeve min.	0.14 mm²
Conductor cross section stranded, with ferrule without plastic sleeve max.	2.5 mm²
Conductor cross section stranded, with ferrule with plastic sleeve min.	0.14 mm²
Conductor cross section stranded, with ferrule with plastic sleeve max.	2.5 mm²
2 conductors with same cross section, stranded, TWIN ferrules with plastic sleeve, max.	0.5 mm²
Connection method	Push-in connection
Stripping length	10 mm
Internal cylindrical gage	A3

Certificates / Approvals

Certification	CSA, cULus Recognized, GOST, ABS, BV, GL, LR, NK, RS
Certification Ex:	ATEX, IECEx
Certifications applied for:	

Accessories

Item	Designation	Description
Assembly		
3030815	ATP-ST QUATTRO	Partition plate, Length: 90.9 mm, Width: 2 mm, Height: 45 mm, Color: gray
3022218	CLIPFIX 35	Snap-on end bracket, for 35 mm NS 35/7.5 or NS 35/15 DIN rail, can be fitted with Zack strip ZB 8 and ZB 8/27, terminal strip marker KLM 2 and KLM, width: 9.5 mm, color: gray
3022276	CLIPFIX 35-5	Quick mounting end clamp for NS 35/7,5 DIN rail or NS 35/15 DIN rail, can be fitted with ZB 5 and ZBF 5 zack marker strip, KLM 2, KLM3, and KML3L terminal strip marker, parking option for FBS...5, FBS...6, KSS 5, KSS 6, width: 5.15 mm, color: gray
3030514	D-ST 2,5-QUATTRO	End cover, Length: 72 mm, Width: 2.2 mm, Height: 36.5 mm, Color: gray
3030513	D-ST 2,5-QUATTRO-0,8 OG	End cover, Length: 72 mm, Width: 0.8 mm, Height: 29 mm, Color: orange
3036602	DS-ST 2,5	Cover segment, Length: 72 mm, Height: 36.5 mm, Color: gray
0801704	NS 35/ 7,5 AL UNPERF 2000MM	DIN rail, material: Aluminum, unperforated, height 7.5 mm, width 35 mm, length: 2 m
1206560	NS 35/ 7,5 CAP	DIN rail end piece, for DIN rail NS 35/7.5
0801762	NS 35/ 7,5 CU UNPERF 2000MM	DIN rail, material: Copper, unperforated, height 7.5 mm, width 35 mm, length: 2 m
0801733	NS 35/ 7,5 PERF 2000MM	DIN rail, material: steel galvanized and passivated with a thick layer, perforated, height 7.5 mm, width 35 mm, length: 2000 mm
0801681	NS 35/ 7,5 UNPERF 2000MM	DIN rail, material: Steel, unperforated, height 7.5 mm, width 35 mm, length: 2 m
1204119	NS 35/ 7,5 WH PERF 2000MM	DIN rail 35 mm (NS 35)
1204122	NS 35/ 7,5 WH UNPERF 2000MM	DIN rail 35 mm (NS 35)
1206421	NS 35/ 7,5 ZN PERF 2000MM	DIN rail, material: Galvanized, perforated, height 7.5 mm, width 35 mm, length: 2 m
1206434	NS 35/ 7,5 ZN UNPERF 2000MM	DIN rail, material: Galvanized, unperforated, height 7.5 mm, width 35 mm, length: 2 m
1201756	NS 35/15 AL UNPERF 2000MM	DIN rail, deep drawn, high profile, unperforated, 1.5 mm thick, material: aluminum, height 15 mm, width 35 mm, length 2000 mm
1206573	NS 35/15 CAP	DIN rail end piece, for DIN rail NS 35/15
1201895	NS 35/15 CU UNPERF 2000MM	DIN rail, material: Copper, unperforated, 1.5 mm thick, height 15 mm, width 35 mm, length: 2 m
1201730	NS 35/15 PERF 2000MM	DIN rail, material: steel galvanized and passivated with a thick layer, perforated, height 15 mm, width 35 mm, length: 2000 mm
1201714	NS 35/15 UNPERF 2000MM	DIN rail, material: Steel, unperforated, height 15 mm, width 35 mm, length: 2 m

0806602	NS 35/15 WH PERF 2000MM	DIN rail 35 mm (NS 35)
1204135	NS 35/15 WH UNPERF 2000MM	DIN rail 35 mm (NS 35)
1206599	NS 35/15 ZN PERF 2000MM	DIN rail, material: Galvanized, perforated, height 15 mm, width 35 mm, length: 2 m
1206586	NS 35/15 ZN UNPERF 2000MM	DIN rail, material: Galvanized, unperforated, height 15 mm, width 35 mm, length: 2 m
1201798	NS 35/15-2,3 UNPERF 2000MM	DIN rail, material: Steel, unperforated, 2.3 mm thick, height 15 mm, width 35 mm, length: 2 m

Bridges

3030161	FBS 2-5	Plug-in bridge, Number of positions: 2, Color: red
3030174	FBS 3-5	Plug-in bridge, Number of positions: 3, Color: red
3030187	FBS 4-5	Plug-in bridge, Number of positions: 4, Color: red
3030190	FBS 5-5	Plug-in bridge, Number of positions: 5, Color: red
3030213	FBS 10-5	Plug-in bridge, Number of positions: 10, Color: red
3030226	FBS 20-5	Plug-in bridge, Number of positions: 20, Color: red
3038930	FBS 50-5	Plug-in bridge, Number of positions: 50, Color: red
3038943	RB ST (2,5/4)-1,5	Reducing bridge, Number of positions: 2, Color: red

General

0800886	E/NS 35 N	End clamp, width: 9.5 mm, color: gray
3048564	PS-8/2,3MM RD	Test adapter, Color: red

Marking

0810588	GBS 5-25X12	Group marker label, snaps onto terminal center for screw, spring-cage and quick connection terminal blocks, labeled with a 25 x 12 mm label or manually with the B-STIFT, in the foot part with ZB 5
0809298	GBS-ZB/26X6	Group marking label, snaps onto terminal center for screw, spring-cage and quick connection terminal blocks, labeled with ESL 26x6 mm or EST 25x6 mm, in the foot part with Zack marker strip, length: 29 mm
3037643	STP 5-2-ZB	Double marker carrier, snaps onto the spring-cage terminal blocks ST 2.5..., labeled with ZB 5 or ZBF 5
0818108	UC-TM 5	Marker for terminal blocks, Sheet, white, Unlabeled, Can be labeled with: Bluemark, Plotter, BLUEMARK CLED, Mounting type: Snap into tall marker groove, For terminal block width: 5.2 mm, Lettering field: 10.5 x 4.6 mm
0824581	UC-TM 5 CUS	Marker for terminal blocks, Can be ordered: By sheet, white, Labeled according to customer specifications, Mounting type: Snap into tall marker groove, For terminal block width: 5.2 mm, Lettering field: 10.5 x 4.6 mm

0818153	UC-TMF 5	Marker for terminal blocks, Sheet, white, Unlabeled, Can be labeled with: Bluemark, Plotter, BLUEMARK CLED, Mounting type: Snap into flat marker groove, For terminal block width: 5.2 mm, Lettering field: 4.6 x 5.1 mm
0824638	UC-TMF 5 CUS	Marker for terminal blocks, Can be ordered: By sheet, white, Labeled according to customer specifications, Mounting type: Snap into flat marker groove, For terminal block width: 5.2 mm, Lettering field: 4.6 x 5.1 mm
0828734	UCT-TM 5	Marker for terminal blocks, Sheet, white, Unlabeled, Can be labeled with: Thermomark C+, Thermomark C, Bluemark, BLUEMARK CLED, Mounting type: Snap into tall marker groove, For terminal block width: 5.2 mm, Lettering field: 4.6 x 10.5 mm
0829595	UCT-TM 5 CUS	Marker for terminal blocks, Can be ordered: By sheet, white, Labeled according to customer specifications, Mounting type: Snap into tall marker groove, Lettering field: 4.6 x 10.5 mm
0828744	UCT-TMF 5	Marker for terminal blocks, Sheet, white, Unlabeled, Can be labeled with: Thermomark C+, Thermomark C, Bluemark, BLUEMARK CLED, Mounting type: Snap into flat marker groove, For terminal block width: 5.2 mm, Lettering field: 4.4 x 4.7 mm
0829658	UCT-TMF 5 CUS	Marker for terminal blocks, Can be ordered: By sheet, white, Labeled according to customer specifications, Mounting type: Snap into flat marker groove, For terminal block width: 5.2 mm, Lettering field: 4.4 x 4.7 mm
1050004	ZB 5 :UNBEDRUCKT	Zack marker strip, Strip, white, Unlabeled, Can be labeled with: Plotter, Mounting type: Snap into tall marker groove, For terminal block width: 5.2 mm, Lettering field: 5.1 x 10.5 mm
0824962	ZB 5 CUS	Zack marker strip, Can be ordered: Strip, white, Labeled according to customer specifications, Mounting type: Snap into tall marker groove, For terminal block width: 5.2 mm, Lettering field: 5.15 x 10.5 mm
0825025	ZBF 5 CUS	Zack Marker strip, flat, Can be ordered: Strip, white, Labeled according to customer specifications, Mounting type: Snap into flat marker groove, For terminal block width: 5 mm, Lettering field: 5.15 x 5.15 mm
0808642	ZBF 5:UNBEDRUCKT	Zack Marker strip, flat, Strip, white, Unlabeled, Can be labeled with: Plotter, Mounting type: Snap into flat marker groove, For terminal block width: 5 mm, Lettering field: 5.1 x 5.2 mm

Plug/Adapter

3036725	DP PS-5	Spacer plate, Color: red
3002843	ISH 2,5/0,2	Insulation stop sleeve, Color: white
3002856	ISH 2,5/0,5	Insulation stop sleeve, Color: gray
3002869	ISH 2,5/1,0	Insulation stop sleeve, Color: black
0201731	MPS-IH BK	Insulating sleeve, Color: black
0201689	MPS-IH BU	Insulating sleeve, Color: blue
0201702	MPS-IH GN	Insulating sleeve, Color: green

0201728	MPS-IH GY	Insulating sleeve, Color: gray
0201676	MPS-IH RD	Insulating sleeve, Color: red
0201663	MPS-IH WH	Insulating sleeve, Color: white
0201692	MPS-IH YE	Insulating sleeve, Color: yellow
0201744	MPS-MT	Test plugs
3032871	PAI-4-N GY	Test adapter, Color: gray
3030983	PS-5	Test adapter, Color: red
3038723	PS-5/2,3MM RD	Test plugs, Color: red
3038736	PS-6/2,3MM RD	Test plugs, Color: red

Software

5146040	CLIP-PROJECT ADVANCED	Multilingual software for easy planning of Phoenix Contact on DIN rails together with the integrated TRABTECH-select software module for planning comprehensive surge protection concepts.
5146053	CLIP-PROJECT PROFESSIONAL	Multi-lingual software for terminal strip project planning. A marking module allows professional labeling of markers and labels for marking terminal blocks, conductors, cables and devices. The additionally integrated software module TRABTECH-select for planning comprehensive surge protection concepts.

Tools

1204517	SZF 1-0,6X3,5	Actuation tool, for ST terminal blocks, also suitable for use as a bladed screwdriver, size: 0.6 x 3.5 x 100 mm, 2-component grip, with non-slip grip

Drawings

Circuit diagram

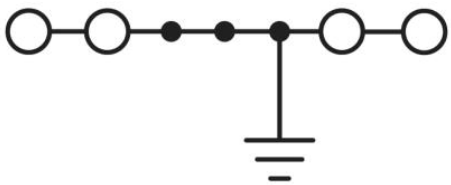

Feed-through terminal block - PT 2,5-QUATTRO BU - 3209581

Please be informed that the data shown in this PDF Document is generated from our Online Catalog. Please find the complete data in the user's documentation. Our General Terms of Use for Downloads are valid (http://phoenixcontact.com/download)

Feed-through terminal block, Connection method: Push-in connection, Cross section: 0.14 mm² - 4 mm², AWG: 26 - 12, Width: 5.2 mm, Height: 35.3 mm, Color: blue, Mounting type: NS 35/7,5, NS 35/15

Why buy this product

- The Push-in connection terminal blocks are characterized by the system features of the CLIPLINE complete system and by easy and tool-free wiring of conductors with ferrules or solid conductors
- The compact design and front connection enable wiring in a confined space
- In addition to the testing facility in the double function shaft, all terminal blocks provide an additional test connection
- Tested for railway applications

Key Commercial Data

Packing unit	50 STK
Weight per Piece (excluding packing)	10.65 g
Custom tariff number	85369040
Country of origin	Germany

Technical data

General

Number of levels	1
Number of connections	4
Potentials	1
Nominal cross section	2.5 mm²
Color	blue
Insulating material	PA
Flammability rating according to UL 94	V0
Area of application	Railway industry
	Machine building
	Plant engineering
	Process industry

Feed-through terminal block - PT 2,5-QUATTRO BU - 3209581

Technical data

General

Rated surge voltage	8 kV
Degree of pollution	3
Overvoltage category	III
Insulating material group	I
Maximum load current	28 A (In case of a 4 mm² conductor cross section, the maximum load current must not be exceeded by the total current of all connected conductors.)
Nominal current I_N	24 A (with 2.5 mm² conductor connection cross section)
Nominal voltage U_N	800 V
Open side panel	Yes

Dimensions

Width	5.2 mm
End cover width	2.2 mm
Length	72.2 mm
Height	35.3 mm
Height NS 35/7,5	36.8 mm
Height NS 35/15	44.3 mm

Connection data

Connection method	Push-in connection
Connection in acc. with standard	IEC 60947-7-1
Conductor cross section solid min.	0.14 mm²
Conductor cross section solid max.	4 mm²
Conductor cross section AWG min.	26
Conductor cross section AWG max.	12
Conductor cross section flexible min.	0.14 mm²
Conductor cross section flexible max.	2.5 mm²
Min. AWG conductor cross section, flexible	26
Max. AWG conductor cross section, flexible	14
Conductor cross section flexible, with ferrule without plastic sleeve min.	0.14 mm²
Conductor cross section flexible, with ferrule without plastic sleeve max.	2.5 mm²
Conductor cross section flexible, with ferrule with plastic sleeve min.	0.14 mm²
Conductor cross section flexible, with ferrule with plastic sleeve max.	2.5 mm²
2 conductors with same cross section, stranded, TWIN ferrules with plastic sleeve, max.	0.5 mm²
Conductor cross section AWG min.	26
Conductor cross section AWG max.	12
Stripping length	8 mm ... 10 mm
Internal cylindrical gage	A3

Standards and Regulations

Connection in acc. with standard	CSA

Feed-through terminal block - PT 2,5-QUATTRO BU - 3209581

Technical data

Standards and Regulations

	IEC 60947-7-1
Flammability rating according to UL 94	V0

Classifications

eCl@ss

eCl@ss 4.0	27141121
eCl@ss 4.1	27141121
eCl@ss 5.0	27141120
eCl@ss 5.1	27141120
eCl@ss 6.0	27141120
eCl@ss 7.0	27141120
eCl@ss 8.0	27141120
eCl@ss 9.0	27141120

ETIM

ETIM 2.0	EC000897
ETIM 3.0	EC000897
ETIM 4.0	EC000897
ETIM 5.0	EC000897

UNSPSC

UNSPSC 6.01	30211811
UNSPSC 7.0901	39121410
UNSPSC 11	39121410
UNSPSC 12.01	39121410
UNSPSC 13.2	39121410

Approvals

Approvals

Approvals

CSA / UL Recognized / VDE Zeichengenehmigung / cUL Recognized / RS / ABS / NK / IECEE CB Scheme / BV / EAC / NK / EAC / DNV GL / cULus Recognized

Ex Approvals

ATEX / IECEx / EAC Ex

Approvals submitted

Feed-through terminal block - PT 2,5-QUATTRO BU - 3209581

Approvals

Approval details

CSA

	B	C
mm²/AWG/kcmil	26-12	26-12
Nominal current IN	20 A	20 A
Nominal voltage UN	600 V	600 V

UL Recognized

	B	C
mm²/AWG/kcmil	26-12	26-12
Nominal current IN	20 A	20 A
Nominal voltage UN	600 V	600 V

VDE Zeichengenehmigung

mm²/AWG/kcmil	0.2-2.5
Nominal current IN	24 A
Nominal voltage UN	800 V

cUL Recognized

	B	C
mm²/AWG/kcmil	26-12	26-12
Nominal current IN	20 A	20 A
Nominal voltage UN	600 V	600 V

RS

ABS

NK

Feed-through terminal block - PT 2,5-QUATTRO BU - 3209581

Approvals

IECEE CB Scheme

mm²/AWG/kcmil	0.2-2.5
Nominal voltage UN	800 V

BV

EAC

NK

EAC

DNV GL

cULus Recognized

Phoenix Contact 2016 © - all rights reserved
http://www.phoenixcontact.com

Feed-through terminal block - PT 2,5-QUATTRO - 3209578

Please be informed that the data shown in this PDF Document is generated from our Online Catalog. Please find the complete data in the user's documentation. Our General Terms of Use for Downloads are valid (http://phoenixcontact.com/download)

Feed-through terminal block, Connection method: Push-in connection, Cross section: 0.14 mm² - 4 mm², AWG: 26 - 12, Width: 5.2 mm, Height: 35.3 mm, Color: gray, Mounting type: NS 35/7,5, NS 35/15

Why buy this product

- The Push-in connection terminal blocks are characterized by the system features of the CLIPLINE complete system and by easy and tool-free wiring of conductors with ferrules or solid conductors
- The compact design and front connection enable wiring in a confined space
- In addition to the testing facility in the double function shaft, all terminal blocks provide an additional test connection
- Tested for railway applications

Key Commercial Data

Packing unit	50 STK
Weight per Piece (excluding packing)	10.6 g
Custom tariff number	85369040
Country of origin	Germany

Technical data

General

Number of levels	1
Number of connections	4
Potentials	1
Nominal cross section	2.5 mm²
Color	gray
Insulating material	PA
Flammability rating according to UL 94	V0
Area of application	Railway industry
	Machine building
	Plant engineering
	Process industry

Feed-through terminal block - PT 2,5-QUATTRO - 3209578

Technical data

General

Rated surge voltage	8 kV
Degree of pollution	3
Overvoltage category	III
Insulating material group	I
Maximum load current	28 A (In case of a 4 mm² conductor cross section, the maximum load current must not be exceeded by the total current of all connected conductors.)
Nominal current I_N	24 A (with 2.5 mm² conductor connection cross section)
Nominal voltage U_N	800 V
Open side panel	Yes
Shock protection test specification	DIN EN 50274 (VDE 0660-514):2002-11
Back of the hand protection	guaranteed
Finger protection	guaranteed
Result of surge voltage test	Test passed
Surge voltage test setpoint	9.8 kV
Result of power-frequency withstand voltage test	Test passed
Power frequency withstand voltage setpoint	2 kV
Result of the test for mechanical stability of terminal points (5 x conductor connection)	Test passed
Result of bending test	Test passed
Bending test rotation speed	10 rpm
Bending test turns	135
Bending test conductor cross section/weight	0.14 mm² / 0.2 kg
	2.5 mm² / 0.7 kg
	4 mm² / 0.9 kg
Tensile test result	Test passed
Conductor cross section tensile test	0.14 mm²
Tractive force setpoint	10 N
Conductor cross section tensile test	2.5 mm²
Tractive force setpoint	50 N
Conductor cross section tensile test	4 mm²
Tractive force setpoint	60 N
Result of tight fit on support	Test passed
Tight fit on carrier	NS 35
Setpoint	1 N
Result of voltage-drop test	Test passed
Requirements, voltage drop	≤ 3.2 mV
Result of temperature-rise test	Test passed
Short circuit stability result	Test passed
Conductor cross section short circuit testing	2.5 mm²
Short-time current	0.3 kA

Feed-through terminal block - PT 2,5-QUATTRO - 3209578

Technical data

General

Conductor cross section short circuit testing	4 mm²
Short-time current	0.48 kA
Result of aging test	Test passed
Ageing test for screwless modular terminal block temperature cycles	192
Result of thermal test	Test passed
Proof of thermal characteristics (needle flame) effective duration	30 s
Oscillation, broadband noise test result	Test passed
Test specification, oscillation, broadband noise	DIN EN 50155 (VDE 0115-200):2008-03
Test spectrum	Service life test category 2, bogie mounted
Test frequency	f_1 = 5 Hz to f_2 = 250 Hz
ASD level	6.12 $(m/s^2)^2$/Hz
Acceleration	3.12 g
Test duration per axis	5 h
Test directions	X-, Y- and Z-axis
Shock test result	Test passed
Test specification, shock test	DIN EN 50155 (VDE 0115-200):2008-03
Shock form	Half-sine
Acceleration	30g
Shock duration	18 ms
Number of shocks per direction	3
Test directions	X-, Y- and Z-axis (pos. and neg.)
Relative insulation material temperature index (Elec., UL 746 B)	130 °C
Temperature index of insulation material (DIN EN 60216-1 (VDE 0304-21))	125 °C
Static insulating material application in cold	-60 °C
Flame test method (DIN EN 60695-11-10)	V0
Oxygen index (DIN EN ISO 4589-2)	>32 %
	2
	passed
	passed
	passed
	28 MJ/kg
	HL 1 - HL 3
	HL 1 - HL 3
	HL 1 - HL 3
	HL 1 - HL 3

Dimensions

Width	5.2 mm
End cover width	2.2 mm
Length	72.2 mm

Feed-through terminal block - PT 2,5-QUATTRO - 3209578

Technical data

Dimensions

Height	35.3 mm
Height NS 35/7,5	36.8 mm
Height NS 35/15	44.3 mm

Connection data

Connection method	Push-in connection
Connection in acc. with standard	IEC 60947-7-1
Conductor cross section solid min.	0.14 mm²
Conductor cross section solid max.	4 mm²
Conductor cross section AWG min.	26
Conductor cross section AWG max.	12
Conductor cross section flexible min.	0.14 mm²
Conductor cross section flexible max.	2.5 mm²
Min. AWG conductor cross section, flexible	26
Max. AWG conductor cross section, flexible	14
Conductor cross section flexible, with ferrule without plastic sleeve min.	0.14 mm²
Conductor cross section flexible, with ferrule without plastic sleeve max.	2.5 mm²
Conductor cross section flexible, with ferrule with plastic sleeve min.	0.14 mm²
Conductor cross section flexible, with ferrule with plastic sleeve max.	2.5 mm²
2 conductors with same cross section, stranded, TWIN ferrules with plastic sleeve, max.	0.5 mm²
Conductor cross section AWG min.	26
Conductor cross section AWG max.	12
Stripping length	8 mm ... 10 mm
Internal cylindrical gage	A3

Standards and Regulations

Connection in acc. with standard	CSA
	IEC 60947-7-1
Flammability rating according to UL 94	V0

Classifications

eCl@ss

eCl@ss 4.0	27141121
eCl@ss 4.1	27141121
eCl@ss 5.0	27141120
eCl@ss 5.1	27141120
eCl@ss 6.0	27141120
eCl@ss 7.0	27141120
eCl@ss 8.0	27141120
eCl@ss 9.0	27141120

Feed-through terminal block - PT 2,5-QUATTRO - 3209578

Classifications

ETIM

ETIM 2.0	EC000897
ETIM 3.0	EC000897
ETIM 4.0	EC000897
ETIM 5.0	EC000897

UNSPSC

UNSPSC 6.01	30211811
UNSPSC 7.0901	39121410
UNSPSC 11	39121410
UNSPSC 12.01	39121410
UNSPSC 13.2	39121410

Approvals

Approvals

Approvals

CSA / UL Recognized / VDE Zeichengenehmigung / cUL Recognized / RS / ABS / NK / IECEE CB Scheme / BV / EAC / NK / EAC / DNV GL / cULus Recognized

Ex Approvals

ATEX / IECEx / EAC Ex

Approvals submitted

Approval details

CSA

	B	C
mm²/AWG/kcmil	26-12	26-12
Nominal current IN	20 A	20 A
Nominal voltage UN	600 V	600 V

UL Recognized

	B	C
mm²/AWG/kcmil	26-12	26-12

Feed-through terminal block - PT 2,5-QUATTRO - 3209578

Approvals

	B	C
Nominal current IN	20 A	20 A
Nominal voltage UN	600 V	600 V

VDE Zeichengenehmigung

mm²/AWG/kcmil	0.2-2.5
Nominal current IN	24 A
Nominal voltage UN	800 V

cUL Recognized

	B	C
mm²/AWG/kcmil	26-12	26-12
Nominal current IN	20 A	20 A
Nominal voltage UN	600 V	600 V

RS

ABS

NK

IECEE CB Scheme

mm²/AWG/kcmil	0.2-2.5
Nominal voltage UN	800 V

BV

EAC

NK

EAC

Feed-through terminal block - PT 2,5-QUATTRO - 3209578

Approvals

DNV GL

cULus Recognized

Phoenix Contact 2016 © - all rights reserved
http://www.phoenixcontact.com

Extract from the online catalog

NS 35/ 7,5 PERF 2000MM

Order No.: 0801733

http://eshop.phoenixcontact.ca/phoenix/treeViewClick.do?UID=0801733

DIN rail, material: steel galvanized and passivated with a thick layer, perforated, height 7.5 mm, width 35 mm, length: 2000 mm

Commercial data	
EAN	4 017918 006686
Pack	2 m
Customs tariff	72287010
Catalog page information	Page 341 (CL2-2011)

Product notes

WEEE/RoHS-compliant since: Jan/13/2006

Please note that the data given here has been taken from the online catalog. For comprehensive information and data, please refer to the user documentation at http://www.download.phoenixcontact.com. The General Terms and Conditions of Use apply to Internet downloads.

Technical data

General data

Height	7.5 mm
Length	2000 mm
Width	35 mm
Material	Steel
Coating	Galvanized, passivated with a thick layer
Color	silver
Test standard	In acc. with EN 60715: 2001

Drawings

Dimensioned drawing

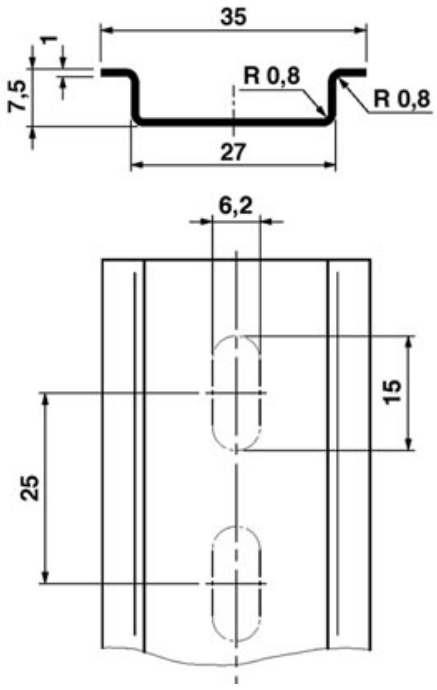

Panduct® Type F Narrow Slot Wiring Duct

- Narrow slot/finger design provides more slots to fit the spacing of high-density terminal blocks and other hardware
- Material: Lead-free PVC
- UL recognized continuous use temperature: 122°F (50°C)
- UL 94 flammability rating of V-0
- Conforms with NFPA 79-2007 section 13.3.1 requirement for flame retardant material
- Provided with mounting holes
- Base and cover length is 6 feet

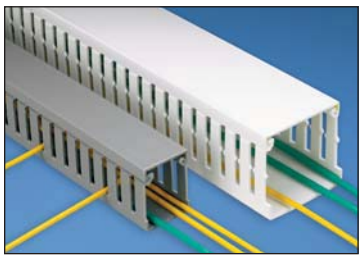

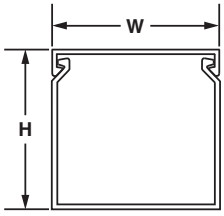

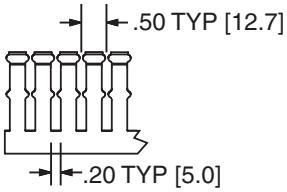

Multiple slot restrictors present with 2" and greater duct wall height.

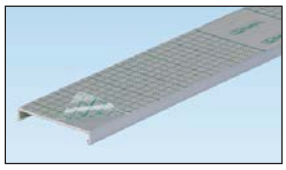

To order cover with protective film add "-F" to part number. 6" cover not available with film.

NEW!

Base Part Number	Duct Size (W x H)* In.	Duct Size (W x H)* mm	Slot Width In.	Slot Width mm	Cover Part Number	Std. Pkg. Qty.	Base Ctn. Qty.	Cover Ctn. Qty.
F.5X.5LG6	0.69 x 0.60	17.5 x 15.2	0.20	5.0	C.5LG6	6	120	120
F.5X1LG6	0.69 x 1.06	17.5 x 26.9	0.20	5.0	C.5LG6	6	120	120
F.75X.75LG6	0.93 x 0.82	23.6 x 20.9	0.20	5.0	C.75LG6	6	120	120
F.75X1.5LG6	0.93 x 1.57	23.6 x 39.9	0.20	5.0	C.75LG6	6	120	120
F1X1LG6	1.26 x 1.13	32.0 x 28.7	0.20	5.0	C1LG6	6	120	120
F1X1.5LG6	1.26 x 1.62	32.0 x 41.1	0.20	5.0	C1LG6	6	120	120
F1X2LG6	1.26 x 2.12	32.0 x 53.8	0.20	5.0	C1LG6	6	120	120
F1X3LG6	1.26 x 3.12	32.0 x 79.2	0.20	5.0	C1LG6	6	120	120
F1X4LG6	1.26 x 4.10	32.0 x 104.1	0.20	5.0	C1LG6	6	60	120
F1.5X1LG6	1.75 x 1.12	44.5 x 28.4	0.20	5.0	C1.5LG6	6	120	120
F1.5X1.5LG6	1.75 x 1.62	44.5 x 41.1	0.20	5.0	C1.5LG6	6	120	120
F1.5X2LG6	1.75 x 2.12	44.5 x 53.8	0.20	5.0	C1.5LG6	6	120	120
F1.5X3LG6	1.75 x 3.12	44.5 x 79.2	0.20	5.0	C1.5LG6	6	120	120
F1.5X4LG6	1.75 x 4.10	44.5 x 104.1	0.20	5.0	C1.5LG6	6	60	120
F2X1LG6	2.25 x 1.12	57.2 x 28.4	0.20	5.0	C2LG6	6	120	120
F2X1.5LG6	2.25 x 1.62	57.2 x 41.1	0.20	5.0	C2LG6	6	120	120
F2X2LG6	2.25 x 2.12	57.2 x 53.8	0.20	5.0	C2LG6	6	120	120
F2X3LG6	2.25 x 3.12	57.2 x 79.2	0.20	5.0	C2LG6	6	60	120
F2X4LG6	2.25 x 4.10	57.2 x 104.1	0.20	5.0	C2LG6	6	60	120
F2X5LG6	2.25 x 5.10	57.2 x 129.5	0.20	5.0	C2LG6	6	60	120
F2.5X3LG6	2.75 x 3.12	69.9 x 79.2	0.20	5.0	C2.5LG6	6	120	120
F3X1LG6	3.25 x 1.12	82.6 x 28.4	0.20	5.0	C3LG6	6	120	120
F3X2LG6	3.25 x 2.12	82.6 x 53.8	0.20	5.0	C3LG6	6	120	120
F3X3LG6	3.25 x 3.12	82.6 x 79.2	0.20	5.0	C3LG6	6	60	120
F3X4LG6	3.25 x 4.10	82.6 x 104.1	0.20	5.0	C3LG6	6	60	120
F3X5LG6	3.25 x 5.10	82.6 x 129.5	0.20	5.0	C3LG6	6	60	120
F4X2LG6	4.25 x 2.12	108.0 x 53.8	0.20	5.0	C4LG6	6	60	120
F4X3LG6	4.25 x 3.12	108.0 x 79.2	0.20	5.0	C4LG6	6	60	120
F4X4LG6	4.25 x 4.10	108.0 x 104.1	0.20	5.0	C4LG6	6	60	120
F4X5LG6	4.25 x 5.10	108.0 x 129.5	0.20	5.0	C4LG6	6	60	120
F6X4LG6	6.25 x 4.15	158.8 x 105.4	0.20	5.0	C6LG6	6	60	120

Part number shown for LG (Light Gray). For other color availability see color selection guide, page C1.48.
Base and cover sold separately.
*"H" dimension includes duct and cover.

Bars with base for ground wire

DIN 3

PR3.Z2	⊔	35 x 7,5 x 1	1SNA 174 300 R1700
PR4	⊔	35 x 15 x 2,3	1SNA 168 500 R1200
PR5	⊔	35 x 15 x 1,5	1SNA 168 700 R2200

Other rails : see section on accessories.

DBTI

7 outputs

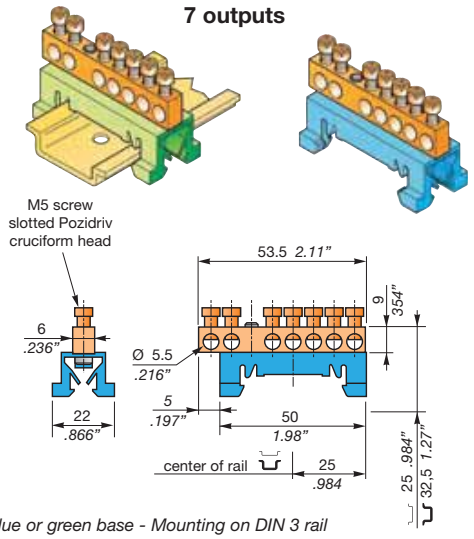

Blue or green base - Mounting on DIN 3 rail

Type	P/N
7 outputs blue base	
DBTI	1SNA **356 100** R**1500**
7 outputs green base	
DBTI	1SNA **356 101** R**0200**

12 outputs

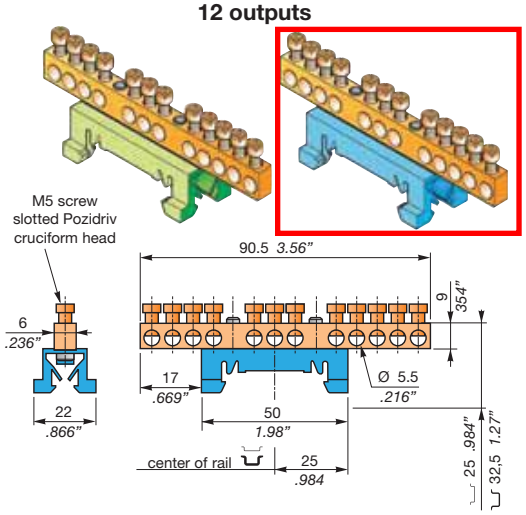

Blue or green base - Mounting on DIN 3 rail

Type	P/N
12 outputs blue base	
DBTI	1SNA **356 102** R**0300**
12 outputs green base	
DBTI	1SNA **356 103** R**0400**

Characteristics	IEC	UL	CSA	IEC	UL	CSA
Connection						
- Screw clamp	7 outputs			12 outputs		
- Max. wire size	10 mm²			10 mm²		
Torque on screw	1.5 Nm	*13.3 lb.in*	*13.3 lb.in*	1.5 Nm	*13.3 lb.in*	*13.3 lb.in*
Screw	M5	M5	M5	M5	M5	M5

Type	P/N

Type	P/N

Characteristics	IEC	UL	CSA	IEC	UL	CSA

Dual-Rated Mechanical Connectors

Type ADR–ALCÜL™ — Two Conductors, One-Hole Mount

- For copper and aluminum conductors
- Easy installation – no special tools required
- Tin-plated for low contact resistance
- All aluminum bodies

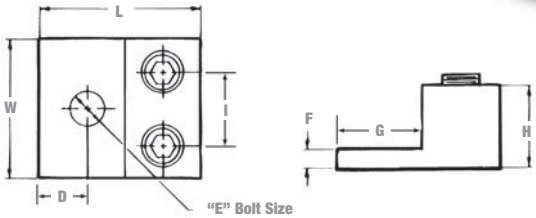

Cat. No.	Conductor Range		Dimensions (in.)							
	Max.	Min.	L	W	H	D	E	F	G	I
ADR11-21	1/0 str.	14 AWG	1-15/32	1-7/32	25/32	7/16	1/4	3/16	27/32	35/64
~~ADR21-21~~	~~2/0 str.~~			~~1-1/4~~		~~27/64~~				~~21/32~~
ADR25-21	250 kcmil	6 str.	2-9/16	1-41/64	1-3/16	7/8	3/8	1/4	1-9/16	13/16
ADR35-21	350 kcmil		2-7/8	1-59/64	1-1/4		1/2		1-3/4	61/64
ADR60-21	600 kcmil	2 str.	3-3/16	2-13/32	1-9/16	5/8		7/16	1-13/16	1-7/32
ADR80-21	800 kcmil	300 kcmil	3-3/8	3-3/16	1-15/16	7/8	5/8	1/2	1-3/4	1-5/8
ADR99-21	1000 kcmil	500 kcmil								

Type ADR–ALCÜL™ — Two Conductors, Two-Hole Mount*

- For copper and aluminum conductors
- Easy installation – no special tools required
- Tin-plated for low contact resistance
- All aluminum bodies

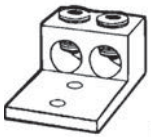

Fig. 1

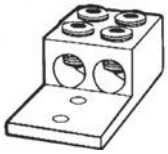

Fig. 2

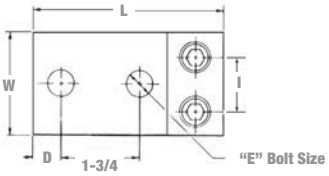

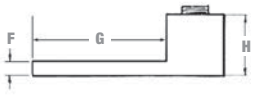

Cat. No.	Figure	Conductor Range		Dimensions (in.)							
		Max.	Min.	L	W	H	D	E	F	G	I
ADR35-22	1	350 kcmil	6 str.	4-1/4	2-19/64	1-3/8	5/8	1/2	5/16	3	1-7/32
ADR60-22D	2	600 kcmil	2 str.	5-5/16	2-3/4	1-1/2			3/8	3-1/16	1-7/16
ADR80-22D		800 kcmil	300 kcmil	6-3/16	3-1/2	1-7/8			9/16		1-13/16
ADR99-22D		1000 kcmil	350 kcmil								

* NEMA Spacing: 1-3/4 in. centers.
Connectors accommodating conductors 600 kcmil and larger have double row of set screws (D suffix).

System pro *M* compact®
Miniature Circuit Breaker SU200M
for branch circuit protection acc. to UL 489

The miniature circuit breaker SU 200 M is ABB's solution for UL 489 branch circuit protection up to 480 Y/277 V AC and 96 V DC. This circuit breaker is an all-round device for AC and DC applications for universal use in North American and global markets due to its approvals acc. to the international standards UL, CSA and IEC. Moreover, SU 200 M is fully compatible with System pro *M* compact® UL 489 accessories.

Features

- High performance MCB with 10 kA interrupting capacity acc. to UL 489 / CSA 22.2 No. 5 and 15 kA breaking capacity acc. to IEC/EN 60947-2
- Certified up to I_n = 40 A at 480 Y/277 V AC acc. to UL 489 / CSA 22.2 No. 5
- Certified for AC and DC use acc. to UL and CSA
- 40 °C reference temperature acc. to UL and CSA
- Current limiting acc. to UL 489
- Clear contact position indication in red/green ("real CPI")

Standards and approvals

Standards	
UL 489	
CSA 22.2 No. 5	
IEC/EN 60947-2	
Approvals	
UL 489	US
CSA 22.2 No. 5	CA
VDE	DE
CCC	CN

Miniature Circuit Breaker SU200M
Technical data

HSC Item 14
Breaker, 10A 1P AC/DC C - ABB SU201M-C10 / Trojan P/N 917139-MC1100 Page 2/6

General Data		
Standards		UL 489, CSA 22.2 No. 5, IEC/EN 60947-2
Poles		1P, 2P, 3P, 4P
Tripping characteristics		C, K, Z
Rated current I_n		0.2 - 63 A
Rated frequency f		50 / 60 Hz, DC (0 Hz)
Rated insulation voltage U_i acc. to IEC/EN 60664-1		250 V AC (phase to ground), 440 V AC (phase to phase)
Overvoltage category		III
Pollution degree		3
IEC/EN 60947-2		
Rated operational voltage U_e		1P: 230 V AC; 2P, 3P, 4P: 400 V AC
Max. power frequency recovery voltage U_{max}	AC	1P: 253 V AC; 2P, 3P, 4P: 440 V AC
Min. operating voltage		12 V AC, 12 V DC
Rated ultimate short-circuit breaking capacity I_{cu}		15 kA
Rated service short-circuit breaking capacity I_{cs}		≤ 40 A: 11.25 kA > 40 A: 7.5 kA
Rated impulse withstand voltage U_{imp} (1.2/50µs)		4 kV (test voltage 6.2 kV at sea level, 5 kV at 2,000 m)
Dielectric test voltage		2 kV (50 / 60Hz, 1 min.)
Reference temperature for tripping characteristics		30 °C
Electrical endurance		I_n < 30 A: 20,000 ops (AC), I_n ≥ 30 A: 10,000 ops. (AC); 1 cycle (2 s - ON, 13 s - OFF, I_n ≤ 32 A), 1 cycle (2 s - ON, 28 s - OFF, I_n > 32 A)
UL / CSA		
Rated voltage	AC	1P: 277 V AC up to 40 A for C, Z char.,
	AC	277 V AC up to 35 A for K char., 240 V AC
	AC	2P, 3P, 4P: 480 Y / 277 V AC up to 40 A for C, Z char.,
	AC	480 Y / 277 V AC up to 35 A for K char., 240 V AC
	DC	1P: 48 V DC; 2P: 96 V DC (2p in series)
Rated interrupting capacity acc. to UL 1077		–
Short-circuit current rating acc. to UL 489		10 kA
Application		–
Reference temperature for tripping characteristics		40 °C
Electrical endurance		6,000 ops (AC), 6,000 ops. (DC); 1 cycle (1 s - ON, 9 s - OFF)
Mechanical data		
Housing		Insulation group II, RAL 7035
Toggle		Insulation group II, black, sealable
Contact position indication		Real CPI (green OFF / red ON)
Protection degree acc. to DIN EN 60529		IP20*, IP40 in enclosure with cover
Mechanical endurance		20,000 ops.
Shock resistance acc. to IEC/EN 60068-2-27		25 g - 2 shocks - 13 ms
Vibration resistance acc. to IEC/EN 60068-2-6		5g - 20 cycles at 5…150…5 Hz with load 0.8 I_n
Environmental conditions (damp heat cyclic) acc. to IEC/EN 60068-2-30		28 cycles with 55°C/90-96% and 25°C/95-100%
Ambient temperature		-25 ... +55°C
Storage temperature		-40 ... +70 °C
Installation		
Terminal		Failsafe bi-directional cylinder-lift terminal
Cross-section of conductors (top/bottom)		solid, stranded: 35 mm² / 35 mm² flexible: 25 mm² / 25 mm² 18 – 4 AWG
Cross-section of busbars (top/bottom)		10 mm² / 10 mm² 18 – 8 AWG
Torque		2.8 Nm AWG 18-16: 13.3 in-lbs. AWG 14-10: 17.7 in-lbs. AWG 8-4: 39.8 in-lbs.
Screwdriver		No. 2 Pozidrive
Mounting		On DIN rail 35 mm acc. to EN 60715 by fast clip
Mounting position		any
Supply		optional
Dimensions and weight		
Mounting dimensions acc. to DIN 43880		Mounting dimension 3
Pole dimensions (H x D x W)		111 x 69 x 17.5 mm
Pole weight		approx. 125 g
Combination with auxiliary elements		
Auxiliary contact		Yes
Signal contact		Yes
Shunt trip		Yes

Miniature Circuit Breaker SU200M
Tripping characteristics

HSC Item 14
Breaker, 10A 1P AC/DC C - ABB SU201M-C10 / Trojan P/N 917139-MC1100 Page 3/6

Tripping characteristics

Acc. to	Tripping characte-ristics	Rated current	Thermal release [1]			Electromagnetic release [2]		
			Currents: conventional non-tripping current	conventional tripping current	Tripping time	Range of instantaneous tripping		Tripping time
		I_n	I_1	I_2				
IEC/EN 60947-2	C	0.5 to 63 A	$1.05 \cdot I_n$	$1.3 \cdot I_n$	> 1 h < 1 h [3]	$5 \cdot I_n$	$10 \cdot I_n$	> 0.2 s < 0.2 s
	K	0.2 to 63 A	$1.05 \cdot I_n$	$1.3 \cdot I_n$	> 1 h < 1 h [3]	$10 \cdot I_n$	$14 \cdot I_n$	> 0.2 s < 0.2 s
	Z	0.5 to 63 A	$1.05 \cdot I_n$	$1.3 \cdot I_n$	> 1 h < 1 h [3]	$2 \cdot I_n$	$3 \cdot I_n$	> 0.2 s < 0.2 s

[1] The thermal releases are calibrated to a nominal reference ambient temperature of 30 °C.
In the case of higher ambient temperatures, the current values fall by approx. 6 % for each 10 K temperature rise.

[2] The indicated tripping values of electromagnetic tripping devices apply to a frequency of 50/60 Hz. The thermal release operates independent of frequency.

[3] As from operating temperature (after I_1 > 1h)

C characteristic

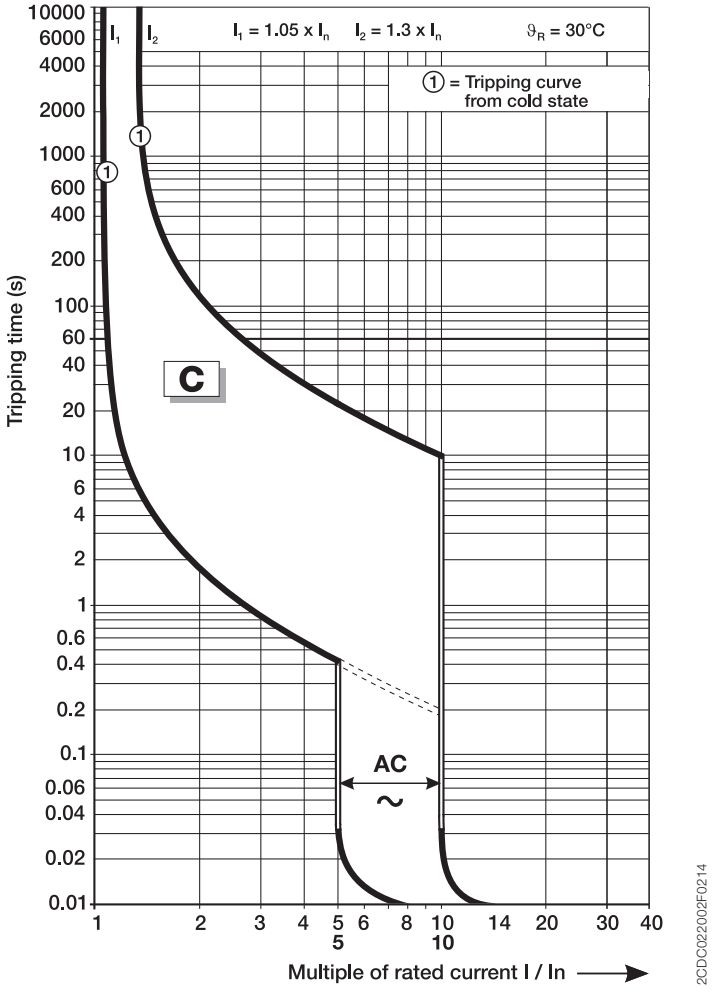

Miniature Circuit Breaker SU200M

Tripping characteristics

HSC Item 14

Breaker, 10A 1P AC/DC C - ABB SU201M-C10 / Trojan P/N 917139-MC1100 Page 4/6

K characteristic

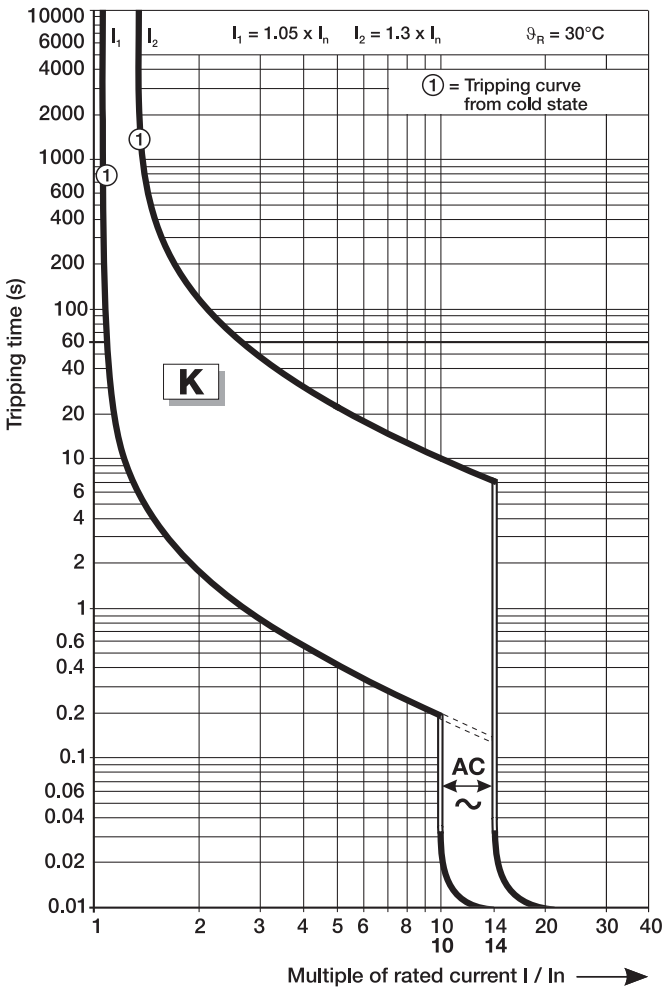

Z characteristic

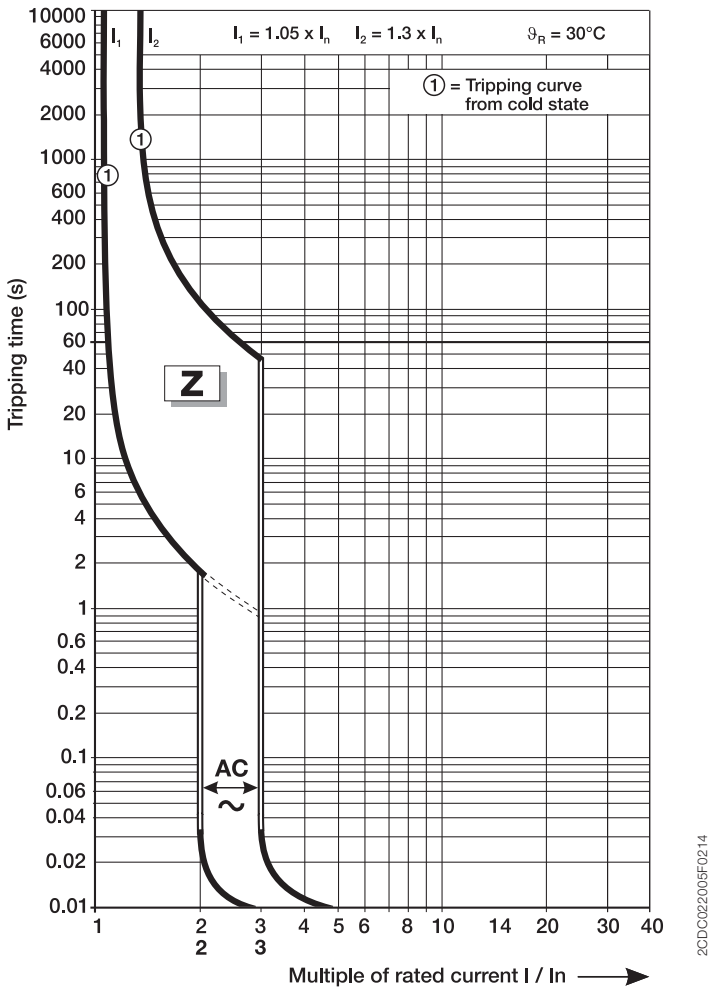

Miniature Circuit Breaker SU200M

Current limiting – I_{peak} and I^2t values acc. to UL 489

HSC Item 14

Breaker, 10A 1P AC/DC C - ABB SU201M-C10 / Trojan P/N 917139-MC1100 Page 5/6

Type	Voltage	Current	Power Factor	Phase	I_{peak}	I^2t
		A			kA	kA^2S
SU203M-K0.2	480Y/277	10000	0.45-0.5	3	0.026	0.008
SU203M-K7	480Y/277	4095	0.45-0.5	3	2.3	11.9
SU203M-K7	480Y/277	7500	0.45-0.5	3	3.4	16.7
SU203M-K7	480Y/277	10000	0.45-0.5	3	4.6	19.0
SU203M-K20	480Y/277	4095	0.45-0.5	3	2.9	18.1
SU203M-K20	480Y/277	7500	0.45-0.5	3	4.3	28.1
SU203M-K20	480Y/277	10000	0.45-0.5	3	6.4	34.6
SU203M-K35	480Y/277	4095	0.45-0.5	3	3.4	27.9
SU203M-K35	480Y/277	7500	0.45-0.5	3	4.7	33.1
SU203M-K35	480Y/277	10000	0.45-0.5	3	9.0	72.0
SU203M-C40	480Y/277	4095	0.45-0.5	3	3.4	22.8
SU203M-C40	480Y/277	7500	0.45-0.5	3	5.1	42.5
SU203M-C40	480Y/277	10000	0.45-0.5	3	9.3	74.6
SU201M-K0.2	277	10000	0.45-0.5	1	0.7	0.092
SU201M-K7	277	4095	0.45-0.5	1	2.5	10.5
SU201M-K7	277	7500	0.45-0.5	1	3.4	16.9
SU201M-K7	277	10000	0.45-0.5	1	3.4	14.5
SU201M-K20	277	4095	0.45-0.5	1	2.8	14.7
SU201M-K20	277	7500	0.45-0.5	1	4.1	23.5
SU201M-K20	277	10000	0.45-0.5	1	4.7	32.5
SU201M-K35	277	4095	0.45-0.5	1	3.0	19.8
SU201M-K35	277	7500	0.45-0.5	1	4.7	36.5
SU201M-K35	277	10000	0.45-0.5	1	4.4	22.1
SU201M-C40	277	4095	0.45-0.5	1	3.6	22.9
SU201M-C40	277	7500	0.45-0.5	1	5.3	52.6
SU201M-C40	277	10000	0.45-0.5	1	5.9	44.9
SU203M-K63	240	4095	0.45-0.5	3	3.6	19.9
SU203M-K63	240	7500	0.45-0.5	3	5.1	33.0
SU203M-K63	240	10000	0.45-0.5	3	6.3	43.3
SU201M-K63	240	4095	0.45-0.5	1	3.9	33.8
SU201M-K63	240	7500	0.45-0.5	1	5.2	43.8
SU201M-K63	240	10000	0.45-0.5	1	6.5	61.8

Miniature Circuit Breaker SU200M
Accessories and dimensional drawing
HSC Item 14
Breaker, 10A 1P AC/DC C - ABB SU201M-C10 / Trojan P/N 917139-MC1100 Page 6/6

Accessory overview

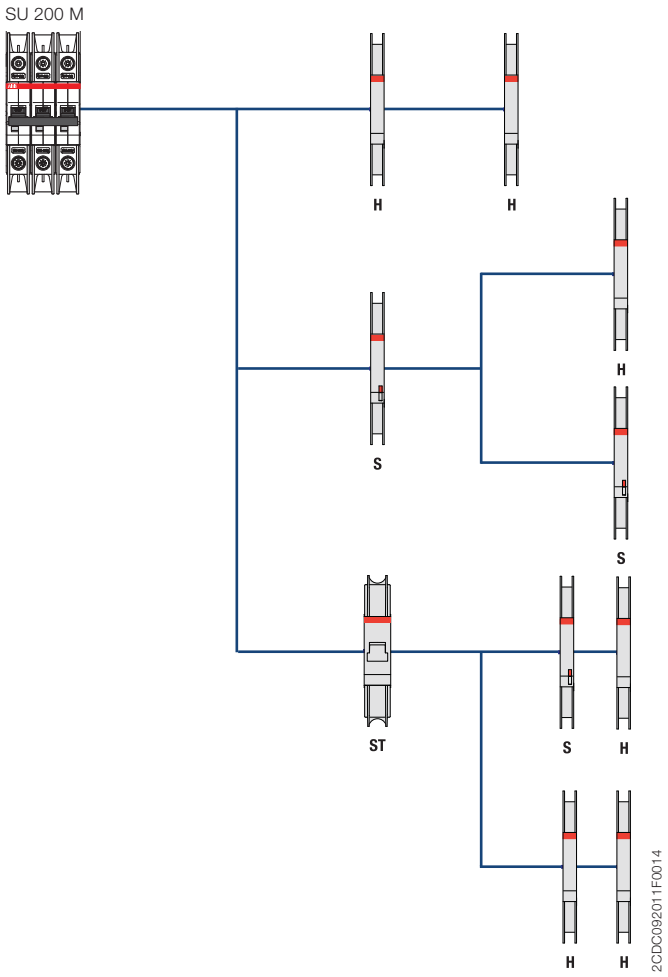

H	Auxiliary contact (change-over contact)	S2C-H6RU
S/H	Signal contact	S2C-S6RU
ST	Shunt trip	S2C-A...U

The certification of the Accessories has been done with one accessory only.

The number of electrical operations is limited to 4,000 operations for the maximum combinations and the combinations including shunt trips.

Dimensional drawing

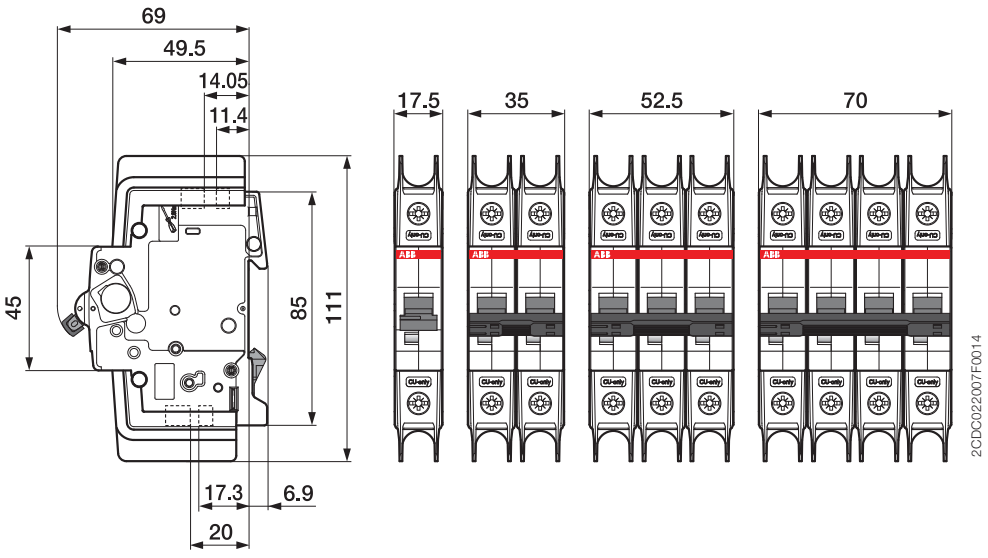

SU203M-C6

Miniature Circuit Breaker - SU200M - 3P - C - 6 ampere

General Information

Extended Product Type	SU203M-C6
Product ID	2CDS273337R0064
EAN	4016779931274
Catalog Description	Miniature Circuit Breaker - SU200M - 3P - C - 6 ampere
Long Description	SU203M-C6 Miniature Circuit Breaker C-Char., 10kA, 6A, 3P UL489

Ordering

Minimum Order Quantity	1 piece
Customs Tariff Number	85362010

Popular Downloads

Data Sheet, Technical Information	2CDC002177D0202
Instructions and Manuals	2CDC002177D0202

Dimensions

Product Net Width	52.5 mm
Product Net Depth / Length	69 mm
Product Net Height	111 mm
Product Net Weight	0.375 kg

Technical

Standards	CSA 22.2 No. 5 IEC/EN 60947-2 UL 489
Number of Poles	3
Tripping Characteristic	C
Rated Current (I_n)	6 A
Rated Operational Voltage	acc. to IEC 60947-2 400 V AC
Power Loss	6 W at Rated Operating Conditions per Pole 2,0 W
Rated Insulation Voltage (U_i)	acc. to IEC/EN 60664-1 440 V
Rated Frequency (f)	50 Hz

	60 Hz DC Hz
Rated Ultimate Short-Circuit Breaking Capacity (I_{cu})	(400 V AC) 15 kA
Rated Service Short-Circuit Breaking Capacity (I_{cs})	(400 V AC) 11.2 kA
Overvoltage Category	III
Pollution Degree	3
Housing Material	Insulation Group I, RAL 7035
Contact Position Indication	Red ON / Green OFF
Degree of Protection	IP20
Remarks	IP40 in enclosure with cover
	20000 cycle
Terminal Type	Screw Terminals
Screw Terminal Type	Failsafe Bi-directional Cylinder-lift Terminal
Connecting Capacity	Busbar 10 / 10 mm² Flexible with Ferrule 0.75 ... 25 mm² Flexible 0.75 ... 25 mm² Rigid 0.75 ... 35 mm² Stranded 0.75 ... 35 mm²
Tightening Torque	2.8 N·m
Recommended Screw Driver	Pozidriv 2
Mounting on DIN Rail	TH35-7.5 (35 x 7.5 mm Mounting Rail) acc. to IEC 60715 TH35-15 (35 x 15 mm Mounting Rail) acc. to IEC 60715
Mounting Position	Any

—

Environmental

Ambient Air Temperature	Operation -25 ... +55 °C Storage -40 ... +70 °C
Resistance to Shock acc. to IEC 60068-2-27	25g / 2 shocks / 13 ms
Resistance to Vibrations acc. to IEC 60068-2-6	5g, 20 cycles at 5 ... 150 ... 5 Hz with load 0.8 In
Environmental Conditions	28 cycles with 55 °C / 90-96 % and 25 °C / 95-100 %
RoHS Status	Following EU Directive 2002/95/EC August 18, 2005 and amendment

—

Technical UL/CSA

Maximum Operating Voltage UL/CSA	480Y / 277 V AC
Connecting Capacity UL/CSA	Busbar 18-8 AWG Conductor 18-4 AWG

—

Certificates and Declarations (Document Number)

Declaration of Conformity - CE	2CDK400595D2702
Instructions and Manuals	2CDC002177D0202
RoHS Information	2CDK400596D0203

—

Container Information

Package Level 1 Units	3 piece
Package Level 1 Width	121 mm
Package Level 1 Depth / Length	191 mm

Package Level 1 Height	82 mm
Package Level 1 Gross Weight	1.175 kg
Package Level 1 EAN	4016779935739
Package Level 2 Units	24 piece
Package Level 2 Width	275 mm
Package Level 2 Depth / Length	395 mm
Package Level 2 Height	210 mm
Package Level 2 Gross Weight	16 kg
Package Level 2 EAN	4016779939539

—

Classifications

ETIM 5	EC000042 - Miniature circuit breaker (MCB)
ETIM 6	EC000042 - Miniature circuit breaker (MCB)
ETIM 7	EC000042 - Miniature circuit breaker (MCB)
eClass	7.0 27141901
UNSPSC	39121614

—

Categories

Low Voltage Products and Systems → Modular DIN Rail Products → Miniature Circuit Breakers MCBs

Manual motor starters

Overview

Type	MS116	MS132	MS165	MS5100
Thermal and electromagnetic protection	Yes	Yes	Yes	Yes
Electromagnetic protection	-	-	-	-
Phase loss sensitivity	Yes	Yes	Yes	
Switch position	ON/OFF	ON/OFF/TRIP	ON/OFF/TRIP	ON/OFF/TRIP
Magnetic trip indication	-	Yes	Yes	
Lockable handle without accessories	-	Yes	Yes	Yes
Disconnecting feature	Yes	Yes	Yes	Yes
Width	45 mm	45 mm	55 mm	90 mm
Rated operational current I_e	0.16 ... 32 A	0.16 ... 32 A	16 ... 65 A	100 A
Setting range	0.1 ... 32 A	0.1 ... 32 A	10 ... 65 A	40 ... 100 A [2]
Ambient air temperature	-25 ... +55 °C [1]	-25 ... +60 °C [1]	-20 ... +60 °C [1]	-25 ... +70 °C

[1] Compensated
[2] For motor loads only up to 80 A

Accessories

Auxiliary contact		HKF1, HK1		AUX
Signalling contact	for tripped alarm	SK1		-
	for short-circuit alarm	-	CK1	-
Shunt trip		AA1		SOR-C
Undervoltage release		UA1		UVR-C

Table for short-circuit ratings for 400/415 V

	Standard range		Performance range		
	MS116		MS132, MS165, MS5100		
Selection parameters					
Rated operational power	**Setting range for thermal release**	**Type**	**Short-circuit breaking capacity**	**Type**	**Short-circuit breaking capacity**
			I_{cu} / I_{cs}		I_{cu} / I_{cs}
0.03 kW[1]	0.1 ... 0.16 A	MS116-0.16	50 kA / 50 kA	MS132-0.16	100 kA / 100 kA
0.06 kW	0.16 ... 0.25 A	MS116-0.25	50 kA / 50 kA	MS132-0.25	100 kA / 100 kA
0.09 kW	0.25 ... 0.4 A	MS116-0.4	50 kA / 50 kA	MS132-0.4	100 kA / 100 kA
0.18 kW	0.4 ... 0.63 A	MS116-0.63	50 kA / 50 kA	MS132-0.63	100 kA / 100 kA
0.25 kW	0.63 ... 1.0 A	MS116-1.0	50 kA / 50 kA	MS132-1.0	100 kA / 100 kA
0.55 kW	1.0...1.6 A	MS116-1.6	50 kA / 50 kA	MS132-1.6	100 kA / 100 kA
0.75 kW	1.6...2.5 A	MS116-2.5	50 kA / 50 kA	MS132-2.5	100 kA / 100 kA
1.5 kW	2.5...4.0 A	MS116-4.0	50 kA / 50 kA	MS132-4.0	100 kA / 100 kA
2.2 kW	4.0...6.3 A	MS116-6.3	50 kA / 50 kA	MS132-6.3	100 kA / 100 kA
4.0 kW	6.3...10 A	MS116-10	50 kA / 50 kA	MS132-10	100 kA / 100 kA
5.5 kW	8...12 A	MS116-12	25 kA / 25 kA	MS132-12	100 kA / 100 kA
7.5 kW	10...16 A	MS116-16	16 kA / 16 kA	MS132-16 / MS165-16	100 kA / 100 kA
7.5 kW	14 ... 20 A			MS165-20	100 kA / 100 kA
7.5 kW	16...20 A	MS116-20	15 kA / 10 kA	MS132-20	100 kA / 100 kA
11 kW	18 ... 25 A			MS165-25	100 kA / 100 kA
11 kW	20...25 A	MS116-25	15 kA / 10 kA	MS132-25	50 kA / 50 kA
15 kW	25...32 A	MS116-32	10 kA / 10 kA	MS132-32	50 kA / 25 kA
15 kW	23 ... 32 A			MS165-32	100 kA / 75 kA
22 kW	30 ... 42 A			MS165-42	50 kA / 25 kA
22 kW	40 ... 54 A			MS165-54	50 kA / 25 kA
25 kW	-				
30 kW	52 ... 65 A			MS165-65	50 kA / 25 kA
37 kW	40 ... 100 A			MS5100-100	70 kA / 70 kA
45 kW	40 ... 100 A			MS5100-100	70 kA / 70 kA

[1] 690 V

	MO132	MO165	MO5100	MS132-T
	-	-	-	Yes
	Yes	Yes	Yes	-
	-	-	-	Yes
	ON/OFF/TRIP	ON/OFF/TRIP	ON/OFF/TRIP	ON/OFF/TRIP
	-	-	-	Yes
	Yes	Yes	Yes	Yes
	Yes	Yes	Yes	Yes
	45 mm	55 mm	76.2 mm	45 mm
	0.16 ... 32 A	16 ... 65 A	70 ... 100 A	0.16 ... 32 A
	-	-	-	0.1 ... 25 A
	-25 ... +60 °C	-25 ... +60 °C	-25 ... +70 °C	-25 ... +60 °C [1]

	HKF1, HK1	AUX	HKF1
	SK1	-	SK1
	-	-	CK1
	AA1	SOR-C	AA1
	UA1	UVR-C	UA1

	Standard range MO132	Performance range MO132, MO165, MO5100	Transformer protection MS132-T

	Type	Short-circuit breaking capacity		Type	Short-circuit breaking capacity		Type	Short-circuit breaking capacity
		I_{cu}	I_{cs}		I_{cu}	I_{cs}		I_{cu} / I_{cs}
	MO132-0.16	100 kA	100 kA	MO132-0.16	100 kA	100 kA	MS132-0.16T	100 kA
	MO132-0.25	100 kA	100 kA	MO132-0.25	100 kA	100 kA	MS132-0.25T	100 kA
	MO132-0.4	100 kA	100 kA	MO132-0.4	100 kA	100 kA	MS132-0.4T	100 kA
	MO132-0.63	100 kA	100 kA	MO132-0.63	100 kA	100 kA	MS132-0.63T	100 kA
	MO132-1.0	100 kA	100 kA	MO132-1.0	100 kA	100 kA	MS132-1.0T	100 kA
	MO132-1.6	100 kA	100 kA	MO132-1.6	100 kA	100 kA	MS132-1.6T	100 kA
	MO132-2.5	100 kA	100 kA	MO132-2.5	100 kA	100 kA	MS132-2.5T	100 kA
	MO132-4.0	100 kA	100 kA	MO132-4.0	100 kA	100 kA	MS132-4.0T	100 kA
	MO132-6.3	100 kA	100 kA	MO132-6.3	100 kA	100 kA	MS132-6.3T	100 kA
	MO132-10	100 kA	100 kA	MO132-10	100 kA	100 kA	MS132-10T	100 kA
	MO132-12	100 kA	100 kA	MO132-12	100 kA	100 kA	MS132-12T	100 kA
	MO132-16	100 kA	100 kA	MO132-16 / MO165-16	100 kA	100 kA	MS132-16T	100 kA
				MO165-20	100 kA	100 kA		
	MO132-20	100 kA	100 kA	MO132-20	100 kA	100 kA	MS132-20T	100 kA
	MO132-25	50 kA	50 kA	MO132-25 / MO165-25	50 kA / 100 kA	50 kA / 100 kA	MS132-25T	50 kA
	MO132-32	50 kA	25 kA	MO132-32	50 kA	25 kA	Transformer protection: The instantaneous short-circuit current setting is 20 times the rated operational current.	
				MO165-32	100 kA	50 kA		
				MO165-42	50 kA	25 kA		
				MO165-54	50 kA	25 kA		
				MO5100-70	36 kA	36 kA		
				MO165-65	50 kA	25 kA		
				MO5100-80	36 kA	36 kA		
				MO5100-100	36 kA	36 kA		

2

2CDC131055C0201

MS116 manual motor starters
0.10 to 32 A – with thermal and electromagnetic protection

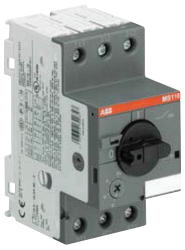
2CDC241010F0011

MS116-16

2CDC241001F0011

MS116-25

2CDC241013F0011

MS116-0.16-HKF1-11

2CDC241012F0011

MS116-32-HKF1-11

Description

MS116 is a compact and economic range for motor protection up to 15 kW (400 V) / 32 A in width of 45 mm. Further features are the build-in disconnect function, temperature compensation, trip-free mechanism and a rotary handle with a clear switch position indication. The manual motor starter is suitable for three- and single-phase applications. Auxiliary contacts, signaling contacts, undervoltage releases, shunt trips, power in-feed blocks and locking devices for protection against unauthorized changes are available as accessory. These are suitable throughout the MS116/MS132/MS165-range.

Ordering details

Rated operational power 400 V AC-3	Setting range	Short-circuit breaking capacity I_{cs} at 400 V AC	Rated instantaneous short-circuit current setting I_i	Type	Order code		Weight (1 pc)
kW	A	kA	A				kg
0.03 [2]	0.10 ... 0.16	50	2.00 [1]	MS116-0.16	1SAM250000R1001		0.225
0.06	0.16 ... 0.25	50	3.10 [1]	MS116-0.25	1SAM250000R1002		0.225
0.09	0.25 ... 0.40	50	5.00 [1]	MS116-0.4	1SAM250000R1003		0.225
0.18	0.40 ... 0.63	50	7.90 [1]	MS116-0.63	1SAM250000R1004		0.225
0.25	0.63 ... 1.00	50	12.5 [1]	MS116-1.0	1SAM250000R1005		0.225
0.55	1.00 ... 1.60	50	20.0 [1]	MS116-1.6	1SAM250000R1006		0.265
0.75	1.60 ... 2.50	50	31.3 [1]	MS116-2.5	1SAM250000R1007		0.265
1.50	2.50 ... 4.00	50	50.0	MS116-4.0	1SAM250000R1008		0.265
2.20	4.00 ... 6.30	50	78.8	MS116-6.3	1SAM250000R1009		0.265
4.00	6.30 ... 10.0	50	150	MS116-10	1SAM250000R1010		0.265
5.50	8.00 ... 12.0	25	180	MS116-12	1SAM250000R1012		0.265
7.50	10.0 ... 16.0	16	240	MS116-16	1SAM250000R1011		0.265
7.50	16.0 ... 20.0	10	300	MS116-20	1SAM250000R1013		0.310
11.0	20.0 ... 25.0	10	375	MS116-25	1SAM250000R1014		0.310
15.0	25.0 ... 32.0	10	480	MS116-32	1SAM250000R1015		0.310
0.03 [2]	0.10 ... 0.16	50	2.00 [1]	MS116-0.16-HKF1-11	1SAM250005R1001		0.240
0.06	0.16 ... 0.25	50	3.10 [1]	MS116-0.25-HKF1-11	1SAM250005R1002		0.240
0.09	0.25 ... 0.40	50	5.00 [1]	MS116-0.4-HKF1-11	1SAM250005R1003		0.240
0.18	0.40 ... 0.63	50	7.90 [1]	MS116-0.63-HKF1-11	1SAM250005R1004		0.240
0.25	0.63 ... 1.00	50	12.5 [1]	MS116-1.0-HKF1-11	1SAM250005R1005		0.240
0.55	1.00 ... 1.60	50	20.0 [1]	MS116-1.6-HKF1-11	1SAM250005R1006		0.280
0.75	1.60 ... 2.50	50	31.3 [1]	MS116-2.5-HKF1-11	1SAM250005R1007		0.280
1.50	2.50 ... 4.00	50	50.0	MS116-4.0-HKF1-11	1SAM250005R1008		0.280
2.20	4.00 ... 6.30	50	78.8	MS116-6.3-HKF1-11	1SAM250005R1009		0.280
4.00	6.30 ... 10.0	50	150	MS116-10.0-HKF1-11	1SAM250005R1010		0.280
5.50	8.00 ... 12.0	25	180	MS116-12.0-HKF1-11	1SAM250005R1012		0.280
7.50	10.0 ... 16.0	16	240	MS116-16.0-HKF1-11	1SAM250005R1011		0.280
7.50	16.0 ... 20.0	10	300	MS116-20-HKF1-11	1SAM250005R1013		0.326
11.0	20.0 ... 25.0	10	375	MS116-25-HKF1-11	1SAM250005R1014		0.326
15.0	25.0 ... 32.0	10	480	MS116-32-HKF1-11	1SAM250005R1015		0.326

Note: Manual motor starters should always be selected so that the actual motor current is within the setting range.
[1] The data is valid for products, produced after week 34, 2014.
[2] 690 V

Main dimensions mm, *inches*

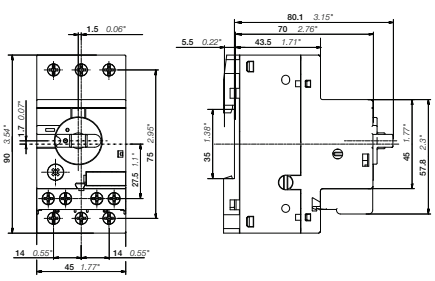

MS116 ≤ 16 A & MS116-HKF1-11 ≤ 16 A

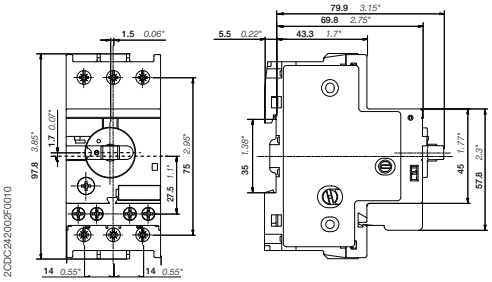

MS116 ≥ 20 A & MS116-HKF1-11 ≥ 20 A

2CDC131062C0201

MS132 manual motor starters
0.10 to 32 A – with thermal and electromagnetic protection

1SBC101232F0010

MS132-10

2CDC241001F0011

MS132-32

2CDC241014F0011

MS132-0.16-HKF1-11

2CDC241015F0011

MS132-32-HKF1-11

Description

MS132 is a compact and powerful range for motor protection up to 15 kW (400 V) / 32 A in width of 45 mm. This type has also a clear and reliable indication of fault in a separate window in the event of short-circuit tripping. Further features are the build-in disconnect function, temperature compensation, trip-free mechanism and a rotary handle with a clear switch position indication. The manual motor starter is suitable for three- and single-phase applications. The handle is lockable to protect against unauthorized changes. Auxiliary contacts, signaling contacts, undervoltage releases, shunt trips, power in-feed blocks are available as accessory. These are suitable throughout the MS116/MS132/MS165-range.

Ordering details

Rated operational power 400 V AC-3	Setting range	Short-circuit breaking capacity I_{cs} at 400 V AC	Rated instantaneous short-circuit current setting I_i	Type	Order code		Weight (1 pc)
kW	A	kA	A				kg
0.03 [2]	0.10 ... 0.16	100	2.00 [1]	MS132-0.16	1SAM350000R1001		0.215
0.06	0.16 ... 0.25	100	3.10 [1]	MS132-0.25	1SAM350000R1002		0.215
0.09	0.25 ... 0.40	100	5.00 [1]	MS132-0.4	1SAM350000R1003		0.215
0.18	0.40 ... 0.63	100	7.90 [1]	MS132-0.63	1SAM350000R1004		0.215
0.25	0.63 ... 1.00	100	12.5 [1]	MS132-1.0	1SAM350000R1005		0.215
0.55	1.00 ... 1.60	100	20.0 [1]	MS132-1.6	1SAM350000R1006		0.265
0.75	1.60 ... 2.50	100	31.3 [1]	MS132-2.5	1SAM350000R1007		0.265
1.50	2.50 ... 4.00	100	50.0	MS132-4.0	1SAM350000R1008		0.265
2.20	4.00 ... 6.30	100	78.8	MS132-6.3	1SAM350000R1009		0.265
4.00	6.30 ... 10.0	100	150	MS132-10	1SAM350000R1010		0.265
5.50	8.00 ... 12.0	100	180	MS132-12	1SAM350000R1012		0.310
7.50	10.0 ... 16.0	100	240	MS132-16	1SAM350000R1011		0.310
7.50	16.0 ... 20.0	100	300	MS132-20	1SAM350000R1013		0.310
11.0	20.0 ... 25.0	50	375	MS132-25	1SAM350000R1014		0.310
15.0	25.0 ... 32.0	25	480	MS132-32	1SAM350000R1015		0.310
0.03 [2]	0.10 ... 0.16	100	2.00 [1]	MS132-0.16-HKF1-11	1SAM350005R1001		0.231
0.06	0.16 ... 0.25	100	3.10 [1]	MS132-0.25-HKF1-11	1SAM350005R1002		0.231
0.09	0.25 ... 0.40	100	5.00 [1]	MS132-0.4-HKF1-11	1SAM350005R1003		0.231
0.18	0.40 ... 0.63	100	7.90 [1]	MS132-0.63-HKF1-11	1SAM350005R1004		0.231
0.25	0.63 ... 1.00	100	12.5 [1]	MS132-1.0-HKF1-11	1SAM350005R1005		0.231
0.55	1.00 ... 1.60	100	20.0 [1]	MS132-1.6-HKF1-11	1SAM350005R1006		0.281
0.75	1.60 ... 2.50	100	31.3 [1]	MS132-2.5-HKF1-11	1SAM350005R1007		0.281
1.50	2.50 ... 4.00	100	50.0	MS132-4.0-HKF1-11	1SAM350005R1008		0.281
2.20	4.00 ... 6.30	100	78.8	MS132-6.3-HKF1-11	1SAM350005R1009		0.281
4.00	6.30 ... 10.0	100	150	MS132-10.0-HKF1-11	1SAM350005R1010		0.281
5.50	8.00 ... 12.0	100	180	MS132-12.0-HKF1-11	1SAM350005R1012		0.326
7.50	10.0 ... 16.0	100	240	MS132-16.0-HKF1-11	1SAM350005R1011		0.326
7.50	16.0 ... 20.0	100	300	MS132-20-HKF1-11	1SAM350005R1013		0.326
11.0	20.0 ... 25.0	50	375	MS132-25-HKF1-11	1SAM350005R1014		0.326
15.0	25.0 ... 32.0	25	480	MS132-32-HKF1-11	1SAM350005R1015		0.326

Note: Manual motor starters should always be selected so that the actual motor current is within the setting range.
[1] The data is valid for products, produced after week 34, 2014.
[2] 690 V

Main dimensions mm, *inches*

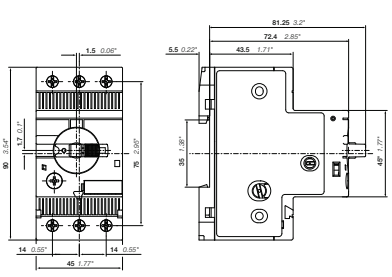
MS132 ≤ 10 A

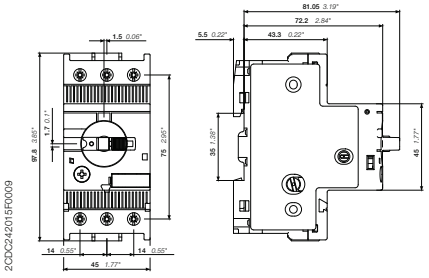
2CDC242015F0009

MS132 ≥ 12 A

2CDC131062C0201

MS165 manual motor starters
10 to 65 A – with thermal and electromagnetic protection

MS165-65

Description

MS165 is a compact and powerful range for motor protection up to 30 kW (400 V) / 65 A in width of 55 mm. This type has also a clear and reliable indication of fault in a separate window in the event of short-circuit tripping. Further features are the build-in disconnect function, temperature compensation, trip-free mechanism and a rotary handle with a clear switch position indication. The manual motor starter is suitable for three- and single-phase applications. The handle is lockable to protect against unauthorized changes. Auxiliary contacts, signaling contacts, undervoltage releases, shunt trips, power in-feed blocks are available as accessory. These are suitable throughout the MS116/MS132/MS165-range.

Ordering details

Rated operational power 400 V AC-3	Setting range	Short-circuit breaking capacity I_{cs} at 400 V AC	Rated instantaneous short-circuit current setting I_i	Type	Order code		Weight (1 pc)
kW	A	kA	A				kg
7.5	10 ... 16	100	240	MS165-16	1SAM451000R1011		0.950
7.5	14 ... 20	100	300	MS165-20	1SAM451000R1012		0.950
11	18 ... 25	100	375	MS165-25	1SAM451000R1013		0.960
15	23 ... 32	75	480	MS165-32	1SAM451000R1014		0.970
22	30 ... 42	25	630	MS165-42	1SAM451000R1015		0.970
22	40 ... 54	25	810	MS165-54	1SAM451000R1016		0.970
30	52 ... 65	25	975	MS165-65	1SAM451000R1017		0.980

Note: Manual motor starters should always be selected so that the actual motor current is within the setting range.

Main dimensions mm, *inches*

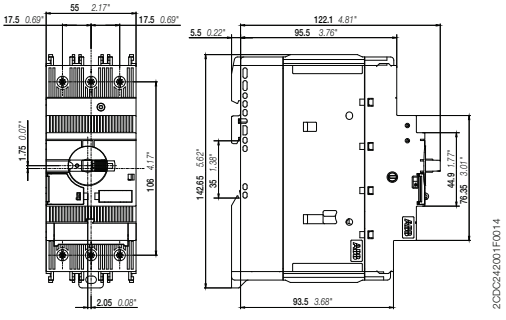

MS165

2CDC131062C0201

Accessories

For Types MS116, MS132, MS45x, MS49x

Close couplers for contactors

Manual motor protector	Miniature contactors		AF contactors						AS contactors		A / AE Contactors		Catalog number
	B6...B7	BO6...BC7	AF09...AF16	AF09Z...AF16Z	AF26...AF38	AF26Z...AF38Z	AF50...AF75	AF95...AF110	AS09...AS16	ASL09...ASL16	A50...A75, AE50...AE75	A95...A110	
MS116-0.16...16	•	•											BEA7/132
			•	•									BEA16-4
					•	•							BEA26-4
									•	•			BEA16-3
MS116-20...25			•	•									BEA16-4
					•	•							BEA38-4
MS116-32					•	•							BEA38-4
MS132-0.16...10	•	•											BEA7/132
			•	•									BEA16-4
					•	•							BEA26-4
									•	•			BEA16-3
MS132-12...16	•	•											BEA7/132
			•	•									BEA16-4
					•	•							BEA38-4
									•	•			BEA16-3
MS132-20...25			•	•									BEA16-4
					•	•							BEA38-4
MS132-32					•	•							BEA38-4
MS45x-40...50							•				•		BEA50/450
MS49x-40...100							•				•		BEA75/495
MS495-40...100								•				•	BEA110/495

Note: For spring terminated AS/ASL, use part number BEA16-3U with integral wire leads for spring terminals.

MS132 + PSR Softstarter

MS132 + AF Contactor

BEA16-4

BEA16-3

Close couplers for softstarters

Manual motor protector	PSR Softstarters				Catalog number
	PSR3...PSR16	PSR25...PSR30	PSR37...PSR45	PSR60...PSR105	
MS116-0.16...16	•				PSR16-MS116
MS116-20...32		•			PSR30-MS132
MS132-0.16...10	•				PSR16-MS116
MS132-12...32		•			PSR30-MS132
MS45x-40...50			•		PSR45-MS450
MS49x-40...100				•	PSR105-MS495

AC / DC Control supply				Type	AF09	AF12	AF16	AF26	AF30	AF38	AF40	AF52	AF65	AF80	AF96
IEC	AC-3	Rated operational power θ ≤ 60 °C for AF09 ... AF370 θ ≤ 55 °C for AF400 ... AF2650	220 - 230 - 240 V	kW	2.2	3	4	6.5	9	11	11	15	18.5	22	25
			380 - 400 V	**kW**	**4**	**5.5**	**7.5**	**11**	**15**	**18.5**	**18.5**	**22**	**30**	**37**	**45**
			415 V	kW	4	5.5	9	11	15	18.5	22	30	37	45	55
			440 V	kW	4	5.5	9	15	18.5	22	22	30	37	45	55
			500 V	kW	5.5	7.5	9	15	18.5	22	22	30	37	45	55
			690 V	kW	5.5	7.5	9	15	18.5	22	22	30	37	45	55
			1000 V	kW	–	–	–	–	–	–	–	–	–	35	40
		Rated operational current	**380 - 400 V**	**A**	**9**	**12**	**18**	**26**	**32**	**38**	**40**	**53**	**65**	**80**	**96**
	AC-1	Rated operational current	**θ ≤ 40 °C, 690 V**	**A**	**25**	**28**	**30**	**45**	**50**	**50**	**70**	**100**	**105**	**125**	**130**
UL / CSA	1-phase motor rating		120 V	hp	0.75	1	1.5	2	2	2	3	3	5	7.5	7.5
			240 V	hp	1.5	2	3	3	5	5	7.5	10	15	15	20
	3-phase motor rating		200 - 208 V	hp	2	3	5	7.5	10	10	10	15	20	25	30
			220 - 240 V	hp	2	3	5	7.5	10	10	15	20	25	30	30
			440 - 480 V	**hp**	**5**	**7.5**	**10**	**15**	**20**	**25**	**30**	**40**	**50**	**60**	**60**
			550 - 600 V	hp	7.5	10	15	20	25	30	40	50	60	75	75
	General use rating		**600 V**	**A**	**25**	**28**	**30**	**45**	**50**	**50**	**60**	**80**	**90**	**105**	**115**
NEMA	NEMA Size				**00**	**0**	–	**1**	–	–	**2**	–	–	**3**	–

Main accessories

Auxiliary contact blocks	Front mounting	**CA4-10** (1 x N.O.) **CA4-01** (1 x N.C.)				
	Side mounting	**CAL4-11** (1 x N.O. + 1 x N.C.)				
Timers	Electronic	**TEF4-ON** **TEF4-OFF**				
Interlocking units	Mechanical	**VM4**		**VM96-4**		
	Mechanical / Electrical	**VEM4**				
Connection sets	For reversing contactors	**BER16-4**	**BER38-4**	**BER65-4**	**BER96-4**	
Surge suppressors		Built-in surge protection				

Overload relays

Thermal relays	Class 10 (Class 10A for TF140, TA200DU)	**TF42** (0.10...38 A)		**TF65** (22...67 A)	**TF96** (40...96 A)	
Electronic relays	Class 10E, 20E, 30E	**EF19** (0.10...18.9 A)	**EF19** (0.10...18.9 A) **EF45** (9...45 A)	**EF65** (20...70 A)	**EF96** (36...100 A)	

Manual motor starters

	Thermal / magnetic protection Class 10	**MS116** (0.10...32 A) Ics up to 50 kA for class 10 A		**MS165** (10...65 A) Ics up to 100 kA (1)	**MS5100** (40...100 A) Ics up to 50 kA	
		MS132 (0.10...32 A) Ics up to 100 kA			**MS495** (45...100 A) Ics up to 50 kA	
				MS497 (22...100 A) Ics up to 100 kA		
	Magnetic only types	**MO132** (0.16...32 A) Ics up to 100 kA		**MO165** (16...65 A) Ics up to 100 kA (1)	**MO5100** (70...100 A) Ics up to 36 kA	
				MO496 (32...100 A) Ics up to 100 kA		
					MO495 (63...100 A) Ics up to 50 kA	
Accessories	For contactor mounting	**BEA16-4**	**BEA38-4**	**BEA65-4** (2)		

(1) MS165/MO165 are suitable for use with AF09 ... AF30 for North american applications.
(2) BEA65-4 suitable for MS165 and MO165 only.

4 to 18.5 kW
AC / DC operated

AF09-30-10

AF26-30-00

5

Description

AF09 ... AF38 contactors are mainly used for controlling 3-phase motors and power circuits up to 690 V AC and 220 V DC. These contactors are of the block type design with 3 main poles.

– control circuit: AC or DC operated with electronic coil interface accepting a wide control voltage range (e.g. 100...250 V AC and DC), only 4 control voltage ranges covering 24...500V 50/60 Hz and 20...500 V DC
  - can manage large control voltage variations
  - reduced panel energy consumption
  - very distinct closing and opening.
– built-in surge suppression
– add-on auxiliary contact blocks for front or side mounting and a wide range of accessories.

Ordering details

IEC		UL/CSA		Rated control circuit voltage Uc min. ... Uc max.			Auxiliary contacts fitted		Type (1)	Order code		Weight
Rated operational power 400 V AC-3	current θ ≤ 40 °C AC-1	3-phase motor rating 480 V	General use rating 600 V AC									Pkg (1 pce)
kW	A	hp	A	V 50/60 Hz	V DC							kg
4	25	5	25	24...60	-	(2)	1	0	AF09-30-10-41	1SBL137001R4110		0.270
							0	1	AF09-30-01-41	1SBL137001R4101		0.270
				48...130	48...130		1	0	AF09-30-10-12	1SBL137001R1210		0.270
							0	1	AF09-30-01-12	1SBL137001R1201		0.270
				100...250	100...250		1	0	AF09-30-10-13	1SBL137001R1310		0.270
							0	1	AF09-30-01-13	1SBL137001R1301		0.270
				250...500	250...500		1	0	AF09-30-10-14	1SBL137001R1410		0.310
							0	1	AF09-30-01-14	1SBL137001R1401		0.310
5.5	28	7.5	28	24...60	-	(2)	1	0	AF12-30-10-41	1SBL157001R4110		0.270
							0	1	AF12-30-01-41	1SBL157001R4101		0.270
				48...130	48...130		1	0	AF12-30-10-12	1SBL157001R1210		0.270
							0	1	AF12-30-01-12	1SBL157001R1201		0.270
				100...250	100...250		1	0	AF12-30-10-13	1SBL157001R1310		0.270
							0	1	AF12-30-01-13	1SBL157001R1301		0.270
				250...500	250...500		1	0	AF12-30-10-14	1SBL157001R1410		0.310
							0	1	AF12-30-01-14	1SBL157001R1401		0.310
7.5	30	10	30	24...60	-	(2)	1	0	AF16-30-10-41	1SBL177001R4110		0.270
							0	1	AF16-30-01-41	1SBL177001R4101		0.270
				48...130	48...130		1	0	AF16-30-10-12	1SBL177001R1210		0.270
							0	1	AF16-30-01-12	1SBL177001R1201		0.270
				100...250	100...250		1	0	AF16-30-10-13	1SBL177001R1310		0.270
							0	1	AF16-30-01-13	1SBL177001R1301		0.270
				250...500	250...500		1	0	AF16-30-10-14	1SBL177001R1410		0.310
							0	1	AF16-30-01-14	1SBL177001R1401		0.310
11	45	15	45	24...60	-	(2)	0	0	AF26-30-00-41	1SBL237001R4100		0.310
				48...130	48...130		0	0	AF26-30-00-12	1SBL237001R1200		0.310
				100...250	100...250		0	0	AF26-30-00-13	1SBL237001R1300		0.310
				250...500	250...500		0	0	AF26-30-00-14	1SBL237001R1400		0.350
15	50	20	50	24...60	-	(2)	0	0	AF30-30-00-41	1SBL277001R4100		0.310
				48...130	48...130		0	0	AF30-30-00-12	1SBL277001R1200		0.310
				100...250	100...250		0	0	AF30-30-00-13	1SBL277001R1300		0.310
				250...500	250...500		0	0	AF30-30-00-14	1SBL277001R1400		0.350
18.5	50	25	50	24...60	-	(2)	0	0	AF38-30-00-41	1SBL297001R4100		0.310
				48...130	48...130		0	0	AF38-30-00-12	1SBL297001R1200		0.310
				100...250	100...250		0	0	AF38-30-00-13	1SBL297001R1300		0.310
				250...500	250...500		0	0	AF38-30-00-14	1SBL297001R1400		0.350

(1) For other auxiliary contacts arrangements, please contact your ABB local sales organization.
(2) For 24...60 V 50/60 Hz - 20...60 V DC, use AF..Z-30-..-21.

Main dimensions mm, *inches*

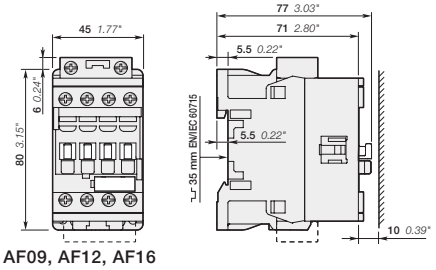

AF09, AF12, AF16

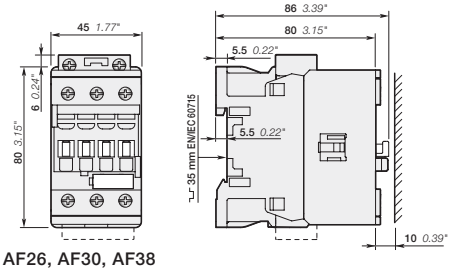

AF26, AF30, AF38

1SBC101371S0201 - Rev. C

4 to 18.5 kW
AC / DC operated - low consumption

AF09Z-30-10

AF26Z-30-00

Description

AF09Z ... AF38Z contactors are mainly used for controlling 3-phase motors and power circuits up to 690 V AC and 220 V DC. These contactors are of the block type design with 3 main poles.

– control circuit: AC or DC operated with electronic coil interface accepting a wide control voltage range (e.g. 100...250 V AC and DC), only 4 control voltage ranges covering 24...250 V 50/60 Hz and 12...250 V DC
  - can manage large control voltage variations
  - allow direct control by PLC-output ≥ 24 V DC 500 mA
  - reduced panel energy consumption
  - very distinct closing and opening
  - can withstand short voltage dips and voltage sags (SEMI F47-0706 conditions of use on request).
– built-in surge suppression
– add-on auxiliary contact blocks for front or side mounting and a wide range of accessories.

Ordering details

IEC		UL/CSA		Rated control circuit voltage Uc min. ... Uc max.		Auxiliary contacts fitted		Type (1)	Order code		Weight
Rated operational power 400 V AC-3	current θ ≤ 40 °C AC-1	3-phase motor rating 480 V	General use rating 600 V AC								Pkg (1 pce)
kW	A	hp	A	V 50/60 Hz	V DC						kg
4	25	5	25	-	12...20	1	0	AF09Z-30-10-20	1SBL136001R2010		0.310
						0	1	AF09Z-30-01-20	1SBL136001R2001		0.310
				24...60	20...60	1	0	AF09Z-30-10-21	1SBL136001R2110		0.310
						0	1	AF09Z-30-01-21	1SBL136001R2101		0.310
				48...130	48...130	1	0	AF09Z-30-10-22	1SBL136001R2210		0.310
						0	1	AF09Z-30-01-22	1SBL136001R2201		0.310
				100...250	100...250	1	0	AF09Z-30-10-23	1SBL136001R2310		0.310
						0	1	AF09Z-30-01-23	1SBL136001R2301		0.310
5.5	28	7.5	28	-	12...20	1	0	AF12Z-30-10-20	1SBL156001R2010		0.310
						0	1	AF12Z-30-01-20	1SBL156001R2001		0.310
				24...60	20...60	1	0	AF12Z-30-10-21	1SBL156001R2110		0.310
						0	1	AF12Z-30-01-21	1SBL156001R2101		0.310
				48...130	48...130	1	0	AF12Z-30-10-22	1SBL156001R2210		0.310
						0	1	AF12Z-30-01-22	1SBL156001R2201		0.310
				100...250	100...250	1	0	AF12Z-30-10-23	1SBL156001R2310		0.310
						0	1	AF12Z-30-01-23	1SBL156001R2301		0.310
7.5	30	10	30	-	12...20	1	0	AF16Z-30-10-20	1SBL176001R2010		0.310
						0	1	AF16Z-30-01-20	1SBL176001R2001		0.310
				24...60	20...60	1	0	AF16Z-30-10-21	1SBL176001R2110		0.310
						0	1	AF16Z-30-01-21	1SBL176001R2101		0.310
				48...130	48...130	1	0	AF16Z-30-10-22	1SBL176001R2210		0.310
						0	1	AF16Z-30-01-22	1SBL176001R2201		0.310
				100...250	100...250	1	0	AF16Z-30-10-23	1SBL176001R2310		0.310
						0	1	AF16Z-30-01-23	1SBL176001R2301		0.310
11	45	15	45	-	12...20	0	0	AF26Z-30-00-20	1SBL236001R2000		0.350
				24...60	20...60	0	0	AF26Z-30-00-21	1SBL236001R2100		0.350
				48...130	48...130	0	0	AF26Z-30-00-22	1SBL236001R2200		0.350
				100...250	100...250	0	0	AF26Z-30-00-23	1SBL236001R2300		0.350
15	50	20	50	-	12...20	0	0	AF30Z-30-00-20	1SBL276001R2000		0.350
				24...60	20...60	0	0	AF30Z-30-00-21	1SBL276001R2100		0.350
				48...130	48...130	0	0	AF30Z-30-00-22	1SBL276001R2200		0.350
				100...250	100...250	0	0	AF30Z-30-00-23	1SBL276001R2300		0.350
18.5	50	25	50	-	12...20	0	0	AF38Z-30-00-20	1SBL296001R2000		0.350
				24...60	20...60	0	0	AF38Z-30-00-21	1SBL296001R2100		0.350
				48...130	48...130	0	0	AF38Z-30-00-22	1SBL296001R2200		0.350
				100...250	100...250	0	0	AF38Z-30-00-23	1SBL296001R2300		0.350

(1) For other auxiliary contacts arrangements, please contact your ABB local sales organization.
Note: Only AF..Z contactors with DC control voltage 12...20 V DC need to respect the connection polarities indicated close to the coil terminals: A1+ for the positive pole and A2- for the negative pole.

Main dimensions mm, *inches*

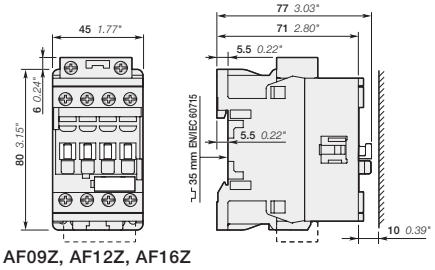

AF09Z, AF12Z, AF16Z

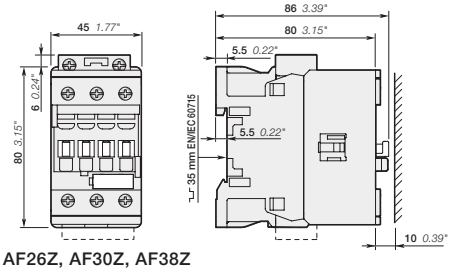

AF26Z, AF30Z, AF38Z

1SBC101372S0201 - Rev. B

Manual motor starters

Overview

Type	MS116	MS132	MS165	MS5100
Thermal and electromagnetic protection	Yes	Yes	Yes	Yes
Electromagnetic protection	-	-	-	-
Phase loss sensitivity	Yes	Yes	Yes	
Switch position	ON/OFF	ON/OFF/TRIP	ON/OFF/TRIP	ON/OFF/TRIP
Magnetic trip indication	-	Yes	Yes	
Lockable handle without accessories	-	Yes	Yes	Yes
Disconnecting feature	Yes	Yes	Yes	Yes
Width	45 mm	45 mm	55 mm	90 mm
Rated operational current I_e	0.16 ... 32 A	0.16 ... 32 A	16 ... 65 A	100 A
Setting range	0.1 ... 32 A	0.1 ... 32 A	10 ... 65 A	40 ... 100 A [2]
Ambient air temperature	-25 ... +55 °C [1]	-25 ... +60 °C [1]	-20 ... +60 °C [1]	-25 ... +70 °C

[1] Compensated
[2] For motor loads only up to 80 A

Accessories

Auxiliary contact		HKF1, HK1			AUX
Signalling contact	for tripped alarm	SK1			-
	for short-circuit alarm	-	CK1		-
Shunt trip		AA1			SOR-C
Undervoltage release		UA1			UVR-C

Table for short-circuit ratings for 400/415 V

	Standard range			Performance range		
	MS116			MS132, MS165, MS5100		
Selection parameters						
Rated operational power	**Setting range for thermal release**	**Type**	**Short-circuit breaking capacity**		**Type**	**Short-circuit breaking capacity**	
			I_{cu}	I_{cs}		I_{cu}	I_{cs}
0.03 kW[1]	0.1 ... 0.16 A	MS116-0.16	50 kA	50 kA	MS132-0.16	100 kA	100 kA
0.06 kW	0.16 ... 0.25 A	MS116-0.25	50 kA	50 kA	MS132-0.25	100 kA	100 kA
0.09 kW	0.25 ... 0.4 A	MS116-0.4	50 kA	50 kA	MS132-0.4	100 kA	100 kA
0.18 kW	0.4 ... 0.63 A	MS116-0.63	50 kA	50 kA	MS132-0.63	100 kA	100 kA
0.25 kW	0.63 ... 1.0 A	MS116-1.0	50 kA	50 kA	MS132-1.0	100 kA	100 kA
0.55 kW	1.0...1.6 A	MS116-1.6	50 kA	50 kA	MS132-1.6	100 kA	100 kA
0.75 kW	1.6...2.5 A	MS116-2.5	50 kA	50 kA	MS132-2.5	100 kA	100 kA
1.5 kW	2.5...4.0 A	MS116-4.0	50 kA	50 kA	MS132-4.0	100 kA	100 kA
2.2 kW	4.0...6.3 A	MS116-6.3	50 kA	50 kA	MS132-6.3	100 kA	100 kA
4.0 kW	6.3...10 A	MS116-10	50 kA	50 kA	MS132-10	100 kA	100 kA
5.5 kW	8...12 A	MS116-12	25 kA	25 kA	MS132-12	100 kA	100 kA
7.5 kW	10...16 A	MS116-16	16 kA	16 kA	MS132-16 / MS165-16	100 kA	100 kA
7.5 kW	14 ... 20 A				MS165-20	100 kA	100 kA
7.5 kW	16...20 A	MS116-20	15 kA	10 kA	MS132-20	100 kA	100 kA
11 kW	18 ... 25 A				MS165-25	100 kA	100 kA
11 kW	20...25 A	MS116-25	15 kA	10 kA	MS132-25	50 kA	50 kA
15 kW	25...32 A	MS116-32	10 kA	10 kA	MS132-32	50 kA	25 kA
15 kW	23 ... 32 A				MS165-32	100 kA	75 kA
22 kW	30 ... 42 A				MS165-42	50 kA	25 kA
22 kW	40 ... 54 A				MS165-54	50 kA	25 kA
25 kW	-						
30 kW	52 ... 65 A				MS165-65	50 kA	25 kA
37 kW	40 ... 100 A				MS5100-100	70 kA	70 kA
45 kW	40 ... 100 A				MS5100-100	70 kA	70 kA

[1] 690 V

MS132 manual motor starters
0.10 to 32 A – with thermal and electromagnetic protection

1SBC101232F0010

MS132-10

2CDC241001F0011

MS132-32

2CDC241014F0011

MS132-0.16-HKF1-11

2CDC241015F0011

MS132-32-HKF1-11

Description

MS132 is a compact and powerful range for motor protection up to 15 kW (400 V) / 32 A in width of 45 mm. This type has also a clear and reliable indication of fault in a separate window in the event of short-circuit tripping. Further features are the build-in disconnect function, temperature compensation, trip-free mechanism and a rotary handle with a clear switch position indication. The manual motor starter is suitable for three- and single-phase applications. The handle is lockable to protect against unauthorized changes. Auxiliary contacts, signaling contacts, undervoltage releases, shunt trips, power in-feed blocks are available as accessory. These are suitable throughout the MS116/MS132/MS165-range.

Ordering details

Rated operational power 400 V AC-3	Setting range	Short-circuit breaking capacity I_{cs} at 400 V AC	Rated instantaneous short-circuit current setting I_i	Type	Order code		Weight (1 pc)
kW	A	kA	A				kg
0.03 [2]	0.10 ... 0.16	100	2.00 [1]	MS132-0.16	1SAM350000R1001		0.215
0.06	0.16 ... 0.25	100	3.10 [1]	MS132-0.25	1SAM350000R1002		0.215
0.09	0.25 ... 0.40	100	5.00 [1]	MS132-0.4	1SAM350000R1003		0.215
0.18	0.40 ... 0.63	100	7.90 [1]	MS132-0.63	1SAM350000R1004		0.215
0.25	0.63 ... 1.00	100	12.5 [1]	MS132-1.0	1SAM350000R1005		0.215
0.55	1.00 ... 1.60	100	20.0 [1]	MS132-1.6	1SAM350000R1006		0.265
0.75	1.60 ... 2.50	100	31.3 [1]	MS132-2.5	1SAM350000R1007		0.265
1.50	2.50 ... 4.00	100	50.0	MS132-4.0	1SAM350000R1008		0.265
2.20	4.00 ... 6.30	100	78.8	MS132-6.3	1SAM350000R1009		0.265
4.00	6.30 ... 10.0	100	150	MS132-10	1SAM350000R1010		0.265
5.50	8.00 ... 12.0	100	180	MS132-12	1SAM350000R1012		0.310
7.50	10.0 ... 16.0	100	240	MS132-16	1SAM350000R1011		0.310
7.50	16.0 ... 20.0	100	300	MS132-20	1SAM350000R1013		0.310
11.0	20.0 ... 25.0	50	375	MS132-25	1SAM350000R1014		0.310
15.0	25.0 ... 32.0	25	480	MS132-32	1SAM350000R1015		0.310
0.03 [2]	0.10 ... 0.16	100	2.00 [1]	MS132-0.16-HKF1-11	1SAM350005R1001		0.231
0.06	0.16 ... 0.25	100	3.10 [1]	MS132-0.25-HKF1-11	1SAM350005R1002		0.231
0.09	0.25 ... 0.40	100	5.00 [1]	MS132-0.4-HKF1-11	1SAM350005R1003		0.231
0.18	0.40 ... 0.63	100	7.90 [1]	MS132-0.63-HKF1-11	1SAM350005R1004		0.231
0.25	0.63 ... 1.00	100	12.5 [1]	MS132-1.0-HKF1-11	1SAM350005R1005		0.231
0.55	1.00 ... 1.60	100	20.0 [1]	MS132-1.6-HKF1-11	1SAM350005R1006		0.281
0.75	1.60 ... 2.50	100	31.3 [1]	MS132-2.5-HKF1-11	1SAM350005R1007		0.281
1.50	2.50 ... 4.00	100	50.0	MS132-4.0-HKF1-11	1SAM350005R1008		0.281
2.20	4.00 ... 6.30	100	78.8	MS132-6.3-HKF1-11	1SAM350005R1009		0.281
4.00	6.30 ... 10.0	100	150	MS132-10.0-HKF1-11	1SAM350005R1010		0.281
5.50	8.00 ... 12.0	100	180	MS132-12.0-HKF1-11	1SAM350005R1012		0.326
7.50	10.0 ... 16.0	100	240	MS132-16.0-HKF1-11	1SAM350005R1011		0.326
7.50	16.0 ... 20.0	100	300	MS132-20-HKF1-11	1SAM350005R1013		0.326
11.0	20.0 ... 25.0	50	375	MS132-25-HKF1-11	1SAM350005R1014		0.326
15.0	25.0 ... 32.0	25	480	MS132-32-HKF1-11	1SAM350005R1015		0.326

Note: Manual motor starters should always be selected so that the actual motor current is within the setting range.
[1] The data is valid for products, produced after week 34, 2014.
[2] 690 V

Main dimensions mm, *inches*

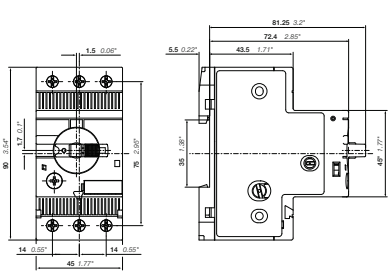
MS132 ≤ 10 A

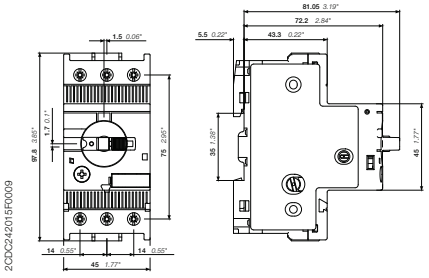
2CDC242015F0009

MS132 ≥ 12 A

2CDC131062C0201

Products Low Voltage Products and Systems Control Products Manual Motor Starters Manual Motor Starters Accessories

General Information

Extended Product Type:	S1-M3-25
Product ID:	1SAM201907R1103
EAN:	4013614400827
Catalog Description:	S1-M3-25 Power Infeed Block
Long Description:	S1-M3-25 3-phase power infeed block Flat, for MS116 / MS132, 25mm2, Type E

Additional Information

Ambient Air Temperature:	Operation -25 …. +70 °C Storage -50 …+80 °C
Ampere Rating UL/CSA:	65 A
Connecting Capacity Main Circuit UL/CSA:	Stranded 1/2x 10 ... 4 AWG Flexible 1/2x 10 ... 6 AWG
Connecting Capacity Main Circuit:	Rigid 1x 6 ... 25 mm² Flexible 1x 6 ... 16 mm²
Country of Origin:	Germany (DE)
Customs Tariff Number:	85369010
Data Sheet, Technical Information:	1SBC100192C02--
Declaration of Conformity - CE:	1SAD938510-0056
Degree of Protection:	IP20
Dimension Diagram:	1SAM200451F0003
E-nummer:	3112082
EAN:	4013614400827
EPLAN Catalog Tree:	Electrical engineering / Protection devices / Motor overload switch
ETIM 4:	EC002498 - Accessories for low-voltage switch technology
ETIM 5:	EC002498 - Accessories for low-voltage switch technology
ETIM 6:	EC002498 - Accessories for low-voltage switch technology
GOST Certificate:	1SAA937000-2703
IIT Publishing Status:	Level 0 - Information enabled
Industrial IT Certification Level:	0
Instructions and Manuals:	2CDC131011M6802 2CDC131034M6801 2CDC131022M6802
Invoice Description:	S1-M3-25 3-phase power infeed block Flat, for MS116 / MS132, 25mm2, Type E
Maximum Operating Voltage UL/CSA:	Main Circuit 600 V
Minimum Order Quantity:	1 piece
Object Classification Code:	X
Package Level 1 EAN:	4013614488207
Package Level 1 Gross Weight:	0.45 kg
Package Level 1 Height:	38 mm
Package Level 1 Length:	245 mm
Package Level 1 Units:	10 piece
Package Level 1 Width:	59 mm
Product Main Type:	S1
Product Name:	Power Infeed Block
Product Net Depth:	32 mm
Product Net Height:	43.95 mm

Product Net Weight:	0.042 kg
Product Net Width:	43.8 mm
Rated Operational Current (I_e):	65 A
Rated Operational Voltage:	690 V
Recommended Screw Driver:	Pozidriv 2 M3.5
RoHS Date:	0159
RoHS Information:	1SAA963003-4402
RoHS Status:	Following EU Directive 2002/95/EC August 18, 2005 and amendment
Selling Unit of Measure:	piece
Short Description:	S1-M3-25 3-phase power infeed block
Standards:	IEC/EN 60947-1 IEC/EN 60947-4-1 UL 60947-1 UL 60947-4-1
Suitable For:	MS116 MS132
Suitable for Product Class:	Manual Motor Starter
Tightening Torque:	Main Circuit 2.5 N·m
Tightening Torque UL/CSA:	Main Circuit 22 in·lb
UL Certificate:	1SAA963001-1602
Wire Stripping Length:	Main Circuit 10 mm
cUL Certificate:	1SAA963001-1701
eClass:	7.0 27379201

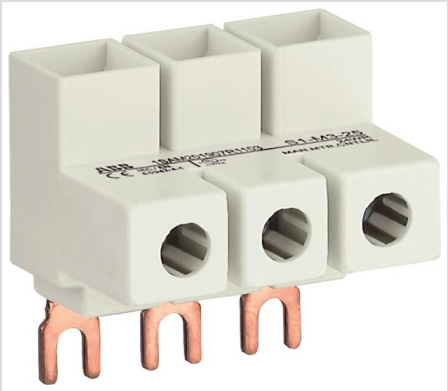

Extract from the online catalog

TRIO-PS/ 3AC/24DC/10

Order No.: 2866459

http://catalog.phoenixcontact.net/phoenix/treeViewClick.do?UID=2866459

DIN rail power supply unit, primary-switched mode, 3-phase, output: 24 V DC / 10 A

Commercial data	
EAN	4 046356 046701
sales group	H001
Pack	1 Pcs.
Customs tariff	85044082
Gross weight in pieces	1.4361 KG
Net weight per piece	1.4361 KG
Catalog page information	Page 593 (IF-2011)

Product notes

WEEE/RoHS-compliant since: 09/06/2006

http://www.download.phoenixcontact.com
Please note that the data given here has been taken from the online catalog. For comprehensive information and data, please refer to the user documentation. The General Terms and Conditions of Use apply to Internet downloads.

Product description

TRIO POWER is the DIN-rail-mountable power supply unit with basic functions. With an output voltage of 5 V DC, 12 V DC, 24 V DC, and 48 V DC and 1- and 3-phase versions with 60 W or 960 W, it is particularly suited for use in series production in mechanical engineering. The wide-range input and international certification package allow worldwide implementation.

The high MTBF of 500,000 h stands for high supply reliability. The devices can be connected in parallel to increase the capacity and redundancy.

The clear LED signaling and the device connection with double terminal block for plus and minus for fast potential distribution are further advantages of this device series. A third minus terminal block simplifies the grounding on the

secondary side. All power supply units are idle-proof and short-circuit-proof and provide a regulated and adjustable output voltage.

Technical data

Input data

Nominal input voltage	2x / 3x 400 V AC ... 500 V AC
AC input voltage range	3x 320 V AC ... 575 V AC (for 3-phase operation)
	2x 360 V AC ... 575 V AC (for 2-phase operation)
AC frequency range	45 Hz ... 65 Hz
Current consumption	Approx. 3x 0.6 A (400 V AC)
	3x 0.5 A (480 V AC)
Inrush surge current	< 15 A
Power failure bypass	> 20 ms (400 V AC)
	> 25 ms (480 V AC)
Permissible backup fuse	B6
	B10
	B16
Required backup fuse (device and line protection)	(externally via 3 circuit breakers 6 A, 10 A or 16 A, characteristic B)
Power factor (cos phi)	0.59
Type of protection	Transient surge protection
Protective circuit/component	Varistor

Output data

Nominal output voltage	24 V DC ±1%
Setting range of the output voltage	22.5 V DC ... 29.5 V DC (> 24 V constant capacity)
Output current	10 A (-25°C ... 55°C)
Derating	55 °C ... 70 °C (2.5%/K)
Connection in parallel	Yes, for redundancy and increased capacity
Connection in series	Yes
Max. capacitive load	Unlimited
Current limitation	Approx. 15 A
Control deviation	< 1 % (change in load, static 10% ... 90%)
	< 2 % (change in load, dynamic 10% ... 90%)
	< 0.1 % (change in input voltage ±10%)
Residual ripple	PP
Peak switching voltages nominal load	PP

Maximum power dissipation NO-Load	6 W
Power loss nominal load max.	28 W

General data

Width	60 mm
Height	130 mm
Depth	152.5 mm
Net weight	1.3 kg
Operating voltage display	Green LED
Efficiency	> 89 % (at 400 V AC and nominal values)
Insulation voltage input/output	4 kV AC (type test)
	2 kV AC (routine test)
Degree of protection	IP20
Protection class	I, with PE connection
MTBF (IEC 61709, SN 29500)	> 500000 h (nach EN 29500)
Ambient temperature (operation)	-25 °C ... 70 °C (> 55° C derating)
Ambient temperature (storage/transport)	-40 °C ... 85 °C
Max. permissible relative humidity (operation)	95 % (at 25 °C, no condensation)
Mounting position	horizontal DIN rail NS 35, EN 60715
Assembly instructions	Can be aligned: Horizontally 0 mm, vertically 50 mm
Electromagnetic compatibility	Conformance with EMC Directive 2004/108/EC
Noise immunity	EN 61000-6-2:2005
Low Voltage Directive	Conformance with LV directive 2006/95/EC
Standard – Electrical equipment of machines	EN 60204
Standard - Electrical safety	EN 60950-1/VDE 0805 (SELV)
Standard – Electronic equipment for use in electrical power installations and their assembly into electrical power installations	EN 50178/VDE 0160 (PELV)
Standard – Safety extra-low voltage	EN 60950-1 (SELV)
	EN 60204 (PELV)
Standard - Safe isolation	DIN VDE 0100-410
	DIN VDE 0106-1010
Standard – Protection against electric shock	DIN 57100-410
Standard – Protection against shock currents, basic requirements for protective separation in electrical equipment	DIN VDE 0106-101
Standard – Limitation of mains harmonic currents	EN 61000-3-2

UL approvals	UL/C-UL listed UL 508
	UL/C-UL Recognized UL 60950
Surge voltage category	III

Connection data, input

Connection method	Screw connection
Conductor cross section solid min.	0.2 mm²
Conductor cross section solid max.	2.5 mm²
Conductor cross section stranded min.	0.2 mm²
Conductor cross section stranded max.	2.5 mm²
Conductor cross section AWG/kcmil min.	24
Conductor cross section AWG/kcmil max	14
Stripping length	9 mm
Screw thread	M2,5

Connection data, output

Connection method	Screw connection
Conductor cross section solid min.	0.2 mm²
Conductor cross section solid max.	2.5 mm²
Conductor cross section stranded min.	0.2 mm²
Conductor cross section stranded max.	2.5 mm²
Conductor cross section AWG/kcmil min.	16
Conductor cross section AWG/kcmil max	12
Stripping length	9 mm

Signaling

Status display	"DC OK" LED green
Note on status display	U_{OUT} > 21.5 V: LED lights up

Certificates / Approvals

Certification — cULus Listed, cULus Recognized

Certifications applied for:

Certification Ex:

Drawings

Block diagram

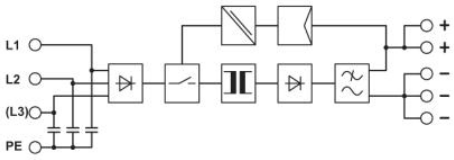

Dimensioned drawing

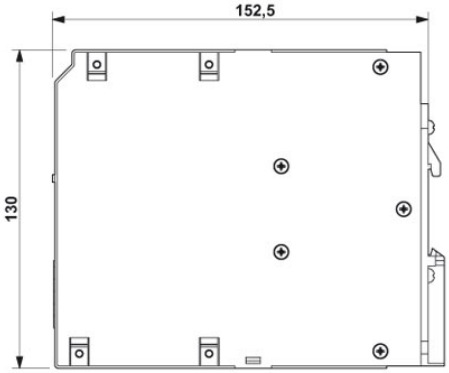

End Module

HSC Item 06
PLC, Wago End Module - WAGO 750-600 / Trojan P/N 916554-600
Page 1/1

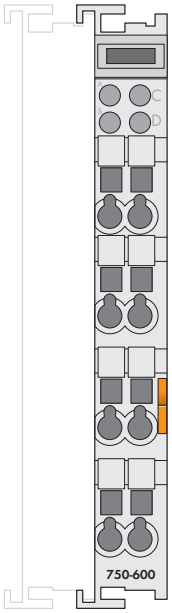

After the fieldbus node is assembled with the correct buscoupler and selected I/O modules, the end module is snapped onto the assembly.

It completes the internal data circuit and ensures correct data flow.

Description	Item no.	Pack. unit
End Module	**750-600**	10[1]
End Module/T	**750-600/025-000**	1
(Operating temperature -20 °C ... +60 °C)		

[1] Also available individually

Accessories	Item no.	Pack. unit
Miniature WSB quick marking system,		
plain	**248-501**	5
with marking	see pages 256 ... 257	

Approvals

Series 750	
Conformity marking	CE
UL 508	
ANSI/ISA 12.12.01	Class I, Div. 2, Grp. ABCD, T4
EN 60079-15	I M2 / II 3 GD Ex nA IIC T4
Marine applications	see "Approvals Overview" in section 1

Technical Data

Width	12 mm
Weight	33.5 g
EMC CE-Immunity to interference	acc. to EN 50082-2 (1996)
EMC CE-Emission of interference	acc. to EN 50081-1 (1993)
EMC marine applications - Immunity to interference	acc. to Germanischer Lloyd (2003)
EMC marine applications - Emission of interference	acc. to Germanischer Lloyd (2003)

Serial Interface RS-232 / RS-485

Configurable

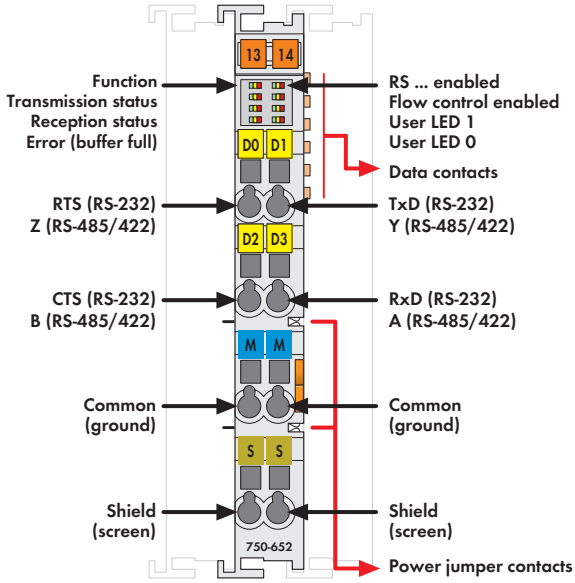

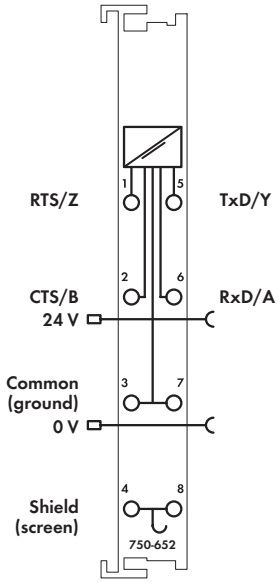

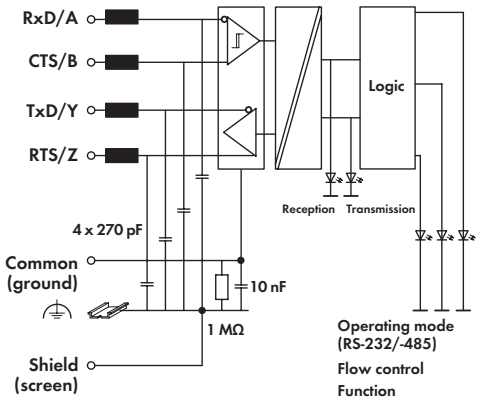

Delivered without miniature WSB markers

The serial interface module connects RS-485/422 or RS-232 interface devices to the WAGO-I/O-SYSTEM 750. It also provides gateways between the serial interface and the fieldbus systems supported by the WAGO-I/O-SYSTEM 750. No higher protocol level is required by the module. Communication is completely transparent to the fieldbus master, which provides a wide range of applications for the serial interface module. If required, communication protocols can be configured via fieldbus master.

The 2560-byte input buffer provides for high data transmission rates. At lower transmission rates, the data received in lower priority tasks is evaluated without data loss.
The 512-byte output buffer provides fast transmission of larger data strings. The module can be configured via WAGO-I/O-CHECK or GSD files. Flexible baud rate and data width selection enable easy adaptation to applications.

Compatibility with couplers/controllers:

See manual, Section 3 "Device Description"

Description	Item No.	Pack. Unit
RS-232 / RS-485 configurable	**750-652**	1
RS-232 / RS-485 configurable/T	**750-652/025-000**	1
(Operating temperature -20 °C ... +60 °C)		

Accessories	Item No.	Pack. Unit
WAGO-I/O-CHECK, RS-232 kit	**759-302**	1
Miniature WSB Quick marking system		
plain	**248-501**	5
with marking	see Full Line Catalog 2010/2011 Volume 3, Section 1	

Approvals

750 Series
Conformity marking CE
UL 508

Technical Data	
Transmission channels	1 TxD / 1 RxD, full duplex, half duplex 7 or 8 bit data, 1 or 2 stop bit
Baud rate	9,600 baud (default setting) 300 baud ... 115,200 baud
Bit transfer	RS-485/-422: ISO 8482 / DIN 66259 - 4; RS-232: EIA/TIA-232-F
Line length	RS-485/-422: max. approx. 1000 m twisted pair, RS-232: max. 40 m
Buffer	2560 bytes in / 512 bytes out
Current consumption (internal)	85 mA
Voltage supply	via system voltage DC/DC
Isolation	500 V system/supply
Internal bit width	1 x 46/1 x 24/1 x 6 bytes in/out (parametrizable), 2 bytes control/status
Wire connection	CAGE CLAMP®
Cross sections	0.08 mm² ... 2.5 mm² / AWG 28 ... 14
Stripped lengths	8 ... 9 mm / 0.33 in
Width	12 mm
Weight	50 g

Serial Interface RS-232 / RS-485

Configurable

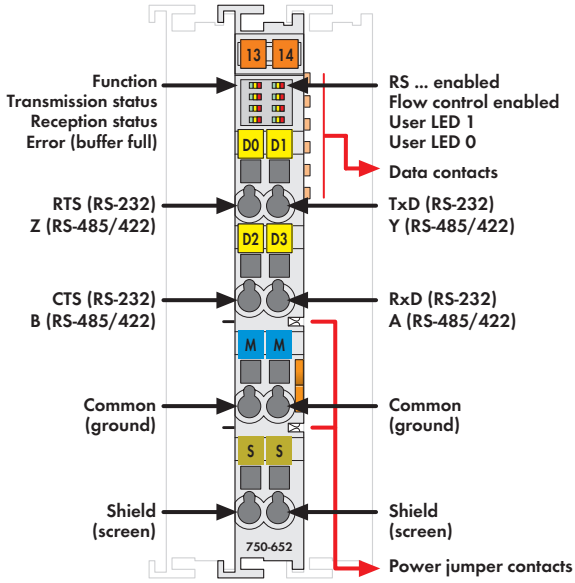

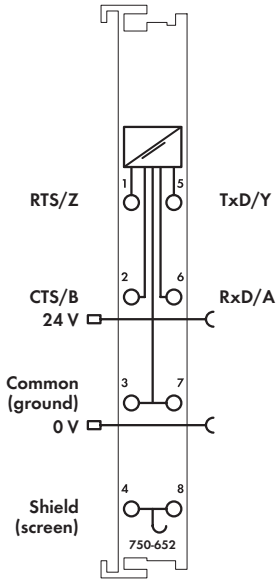

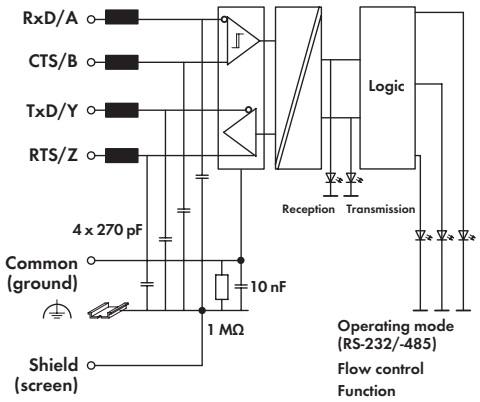

Delivered without miniature WSB markers

The serial interface module connects RS-485/422 or RS-232 interface devices to the WAGO-I/O-SYSTEM 750. It also provides gateways between the serial interface and the fieldbus systems supported by the WAGO-I/O-SYSTEM 750. No higher protocol level is required by the module. Communication is completely transparent to the fieldbus master, which provides a wide range of applications for the serial interface module. If required, communication protocols can be configured via fieldbus master.

The 2560-byte input buffer provides for high data transmission rates. At lower transmission rates, the data received in lower priority tasks is evaluated without data loss.
The 512-byte output buffer provides fast transmission of larger data strings. The module can be configured via WAGO-I/O-CHECK or GSD files. Flexible baud rate and data width selection enable easy adaptation to applications.

Compatibility with couplers/controllers:

See manual, Section 3 "Device Description"

Description	Item No.	Pack. Unit
RS-232 / RS-485 configurable	**750-652**	1
RS-232 / RS-485 configurable/T	**750-652/025-000**	1
(Operating temperature -20 °C ... +60 °C)		

Accessories	Item No.	Pack. Unit
WAGO-I/O-CHECK, RS-232 kit	**759-302**	1
Miniature WSB Quick marking system		
plain	**248-501**	5
with marking	see Full Line Catalog 2010/2011 Volume 3, Section 1	

Approvals	
750 Series	
Conformity marking	CE
UL 508	

Technical Data	
Transmission channels	1 TxD / 1 RxD, full duplex, half duplex 7 or 8 bit data, 1 or 2 stop bit
Baud rate	9,600 baud (default setting) 300 baud ... 115,200 baud
Bit transfer	RS-485/-422: ISO 8482 / DIN 66259 - 4; RS-232: EIA/TIA-232-F
Line length	RS-485/-422: max. approx. 1000 m twisted pair, RS-232: max. 40 m
Buffer	2560 bytes in / 512 bytes out
Current consumption (internal)	85 mA
Voltage supply	via system voltage DC/DC
Isolation	500 V system/supply
Internal bit width	1 x 46/1 x 24/1 x 6 bytes in/out (parametrizable), 2 bytes control/status
Wire connection	CAGE CLAMP®
Cross sections	0.08 mm² ... 2.5 mm² / AWG 28 ... 14
Stripped lengths	8 ... 9 mm / 0.33 in
Width	12 mm
Weight	50 g

750-430, 750-431 / 753-430, 753-431

8-Channel Digital Input Module DC 24 V

1-conductor connection; high-side switching

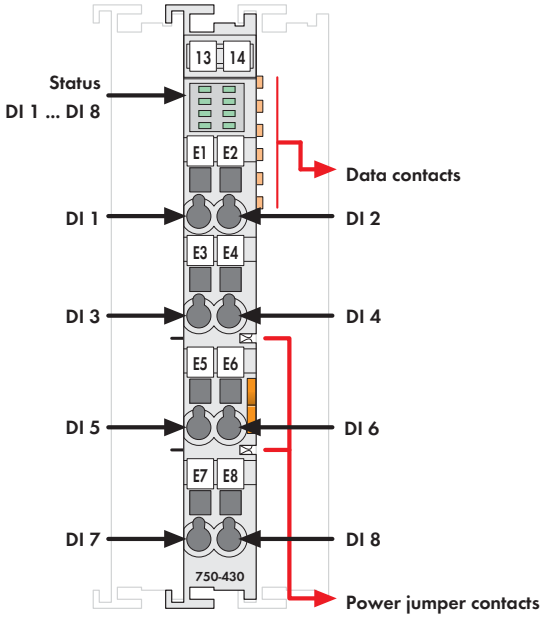

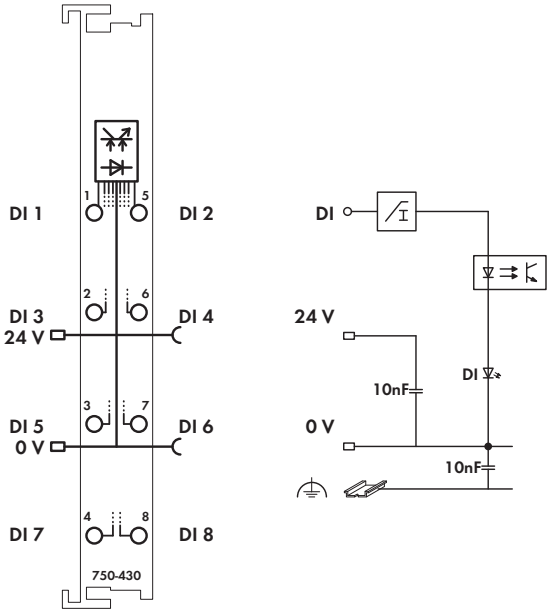

Fig. Series 750 / Technical data see page 28 / Delivery without Mini WSB marker Series 750 / 753 marking see pages 16 ... 17 / 18 ... 19

NOTE: Connection point marking (i.e., 1 ... 8) does not refer to channel assignment

The digital input modules provide 8 channels maintaining a width of only 12 mm. They receive control signals from digital field devices (sensors, etc.).

Each input module has a noise-rejection filter. This filter is available with different time constants.

An optocoupler is used for electrical isolation between the bus and the field side.

Description	Item no.	Pack. unit
8DI 24V DC, 3.0ms	**750-430**	10[1]
8DI 24V DC, 0.2ms	**750-431**	10[1]
8DI 24V DC, 3.0ms	**750-430/025-000**	1
(Operating temperature -20 °C ... +60 °C)		
8DI 24V DC, 3.0ms (without connector)	**753-430**	10[1]
8DI 24V DC, 0.2ms (without connector)	**753-431**	10[1]

[1] Also available individually

Accessories		Item no.	Pack. unit
	753 Series connector	**753-110**	25
	Coding elements	**753-150**	100
	Miniature WSB quick marking system,		
	plain	**248-501**	5
	with marking	see pages 256 ... 257	

Approvals	
Series 750 and 753	
cULus UL 508	
Conformity marking	CE
Ex cULus ANSI/ISA 12.12.01	Class I, Div. 2, Grp. ABCD, T4
Series 750	
Ex EN 60079-15	I M2 / II 3 GD Ex nA IIC T4
	BR-Ex nA II T4
Marine applications	see "Approvals Overview" in section 1

Technical Data	
No. of inputs	8
Current consumption (internal)	17 mA
Voltage via power jumper contacts	DC 24 V (-25 % ... +30 %)
Signal voltage (0)	DC -3 V ... +5 V
Signal voltage (1)	DC 15 V ... 30 V
Input filter	3.0 ms (750-430 / 753-430)
	0.2 ms (750-431 / 753-431)
Input current (typ.)	2.8 mA
Isolation	500 V system/supply
Internal bit width	8 bits
Wire connection	CAGE CLAMP®
Cross sections	0.08 mm² ... 2.5 mm² / AWG 28 ... 14
Stripped lengths (750 / 753 Series)	8 ... 9 mm / 0.33 in
	9 ... 10 mm / 0.37 in
Width	12 mm
Weight	48.5 g
EMC CE-Immunity to interference	acc. to EN 50082-2 (1996)
EMC CE-Emission of interference	acc. to EN 50081-1 (1993)
EMC marine applications -	
Immunity to interference	acc. to Germanischer Lloyd (2003)
EMC marine applications -	
Emission of interference	acc. to Germanischer Lloyd (2003)

750-512 / 753-512

2-Channel Relay Output Module AC 230 V, DC 30 V

non-floating; 2 make contacts

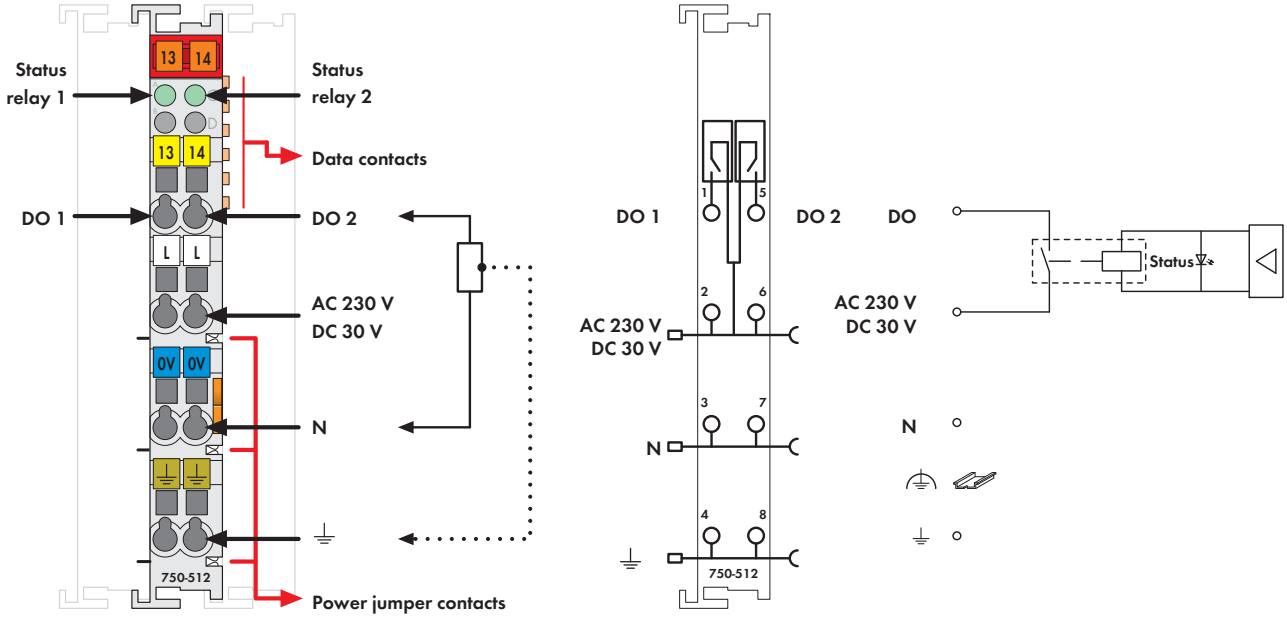

Fig. Series 750 / Technical data see page 28 / Delivery without Mini WSB marker
Series 750 / 753 marking see pages 16 ... 17 / 18 ... 19

The connected load is switched via the digital output (relay contacts) from the control system.

The internal system voltage is used to trigger the relays.

Note that the power jumper contacts supply both "N" (common point) and switched output voltages (this may be DC or AC).

The switched status of the relay is shown by a LED.

The module is a 2-channel, 4-conductor device and actuators with a ground (earth) wire may be directly connected to the module.

Notice:
An additional supply module must be added for operation with AC 250 V/ DC 30 V!

Description	Item no.	Pack. unit
2DO 230V AC 2.0A/ Relay 2NO	**750-512**	10[1]
2DO 230V AC 2.0A/ Relay 2NO (without connector)	**753-512**	10[1]

[1] Also available individually

Accessories		Item no.	Pack. unit
	753 Series connector	**753-110**	25
	Coding elements	**753-150**	100
	Miniature WSB quick marking system,		
	plain	**248-501**	5
	with marking	see pages 256 ... 257	

Approvals

Series 750 and 753	
Conformity marking	CE
UL 508	
ANSI/ISA 12.12.01	Class I, Div. 2, Grp. ABCD, T4
Series 750	
EN 60079-15	I M2 / II 3 GD Ex nC IIC T4
Marine applications	see "Approvals Overview" in section 1

Technical Data

No. of outputs	2 make contacts
Current consumption max. (internal)	100 mA
Switching voltage (max.)	AC 250 V / DC 30 V
Switching power	500 VA / 60 W (resistive load)
	cos φ max. =0.4; L/R max = 7 ms
Switching current (min.)	10 mA / 5 V DC
Switching current (max.)	AC / DC 2 A
Switching rate (max.)	30 / min (at nominal load)
Pull-in time (max.)	10 ms
Bounce time (typ.)	1.2 ms
Drop-out time (max.)	10 ms
Contact material	Silver alloy
Mechanical life	2 x 10^7 switching operations
Electrical life	3 x 10^5 switching operations
	(AC 2 A / 250 V) or (DC 2 A / 30 V)
Isolation	1.5 kV eff. (field/system)*;
	* 2.5 kV rated surge voltage;
	Overvoltage category III
Internal bit width	2 bits
Wire connection	CAGE CLAMP®
Cross sections	0.08 mm² ... 2.5 mm² / AWG 28 ... 14
Stripped lengths (750 / 753 Series)	8 ... 9 mm / 0.33 in
	9 ... 10 mm / 0.37 in
Width	12 mm
Weight	54.5 g
EMC CE-Immunity to interference	acc. to EN 50082-2 (1996)
EMC CE-Emission of interference	acc. to EN 50081-1 (1993)
EMC marine applications -	
Immunity to interference	acc. to Germanischer Lloyd (2003)
EMC marine applications -	
Emission of interference	acc. to Germanischer Lloyd (2003)

PLC - ETHERNET TCP/IP Programmable Fieldbus Controller

16-bit CPU

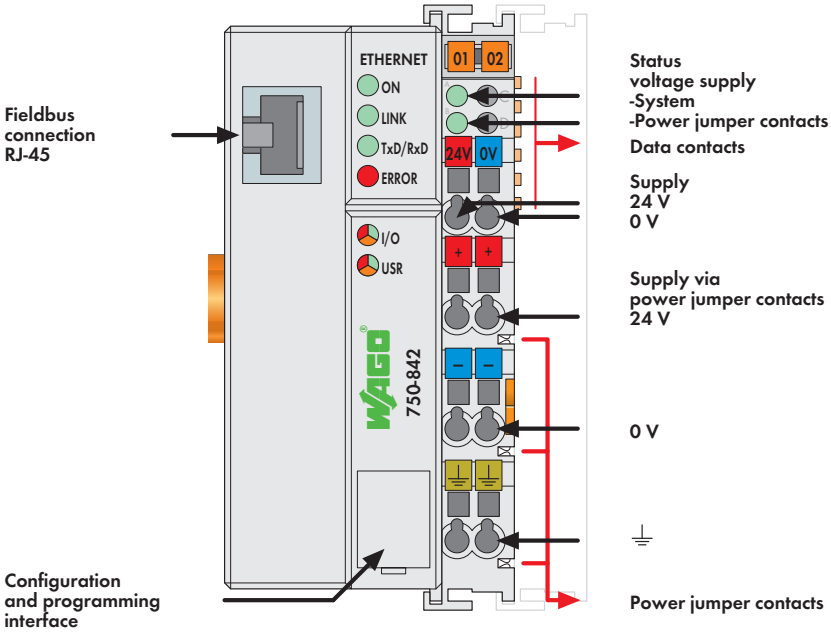

The ETHERNET PLC combines control functionality, I/O interface and ETHERNET in one device.

Programming PLC applications is performed in compliance with IEC 61131-3. Function blocks allow both clients and servers to be programmed via socket APIs for all transport protocols (e.g., TCP, UDP).

Features and applications:

- Use of decentralized control can better support a PLC or PC
- Complex applications can be divided into individually testable units
- Programmable fault response in the event of a fieldbus failure
- Signal pre-processing reduces fieldbus transmissions
- Peripheral equipment can be controlled directly, resulting in faster system response times
- Stand-alone, compact controller

Description	Item No.	Pack. Unit
ETHERNET Controller 10 MBit	**750-842**	1

Accessories	Item No.	Pack. Unit
WAGO-I/O-PRO V2.3, RS-232 kit	**759-333**	1
Miniature WSB Quick marking system		
plain	**248-501**	5
with marking	see Section 11	

Approvals

Conformity marking	CE
Korea Certification	
Marine applications	ABS, BV, DNV, GL, KR, LR, NKK, PRS, RINA
UL 508	
ANSI/ISA 12.12.01	Class I, Div. 2, Grp. ABCD, T4
TÜV 12.1297 X (Brazil)	Ex nA IIC T4 Gc
TÜV 07 ATEX 554086 X	I M2 Ex d I Mb, II 3 G Ex nA IIC T4 Gc, II 3 D Ex tc IIIC T135°C Dc
IECEx TUN 09.0001 X	Ex d I Mb, Ex nA IIC T4 Gc, Ex tc IIIC T135°C Dc

System Data

No. of controllers connected to Master	limited by ETHERNET specification
Transmission medium	Twisted Pair S-UTP 100 Ω cat. 5
Max. length of fieldbus segment	100 m between hub station and 750-842; max. length of network limited by ETHERNET specification
Baud rate	10 Mbit/s
Buscoupler connection	RJ-45
Protocols	MODBUS/TCP, HTTP, BootP, MODBUS/UDP
Programming	WAGO-I/O-PRO 32, from firmware version SW 15, also programmable with WAGO- I/O-PRO V2.3
IEC 61131-3	IL, LD, FBD (CFC), ST, FC

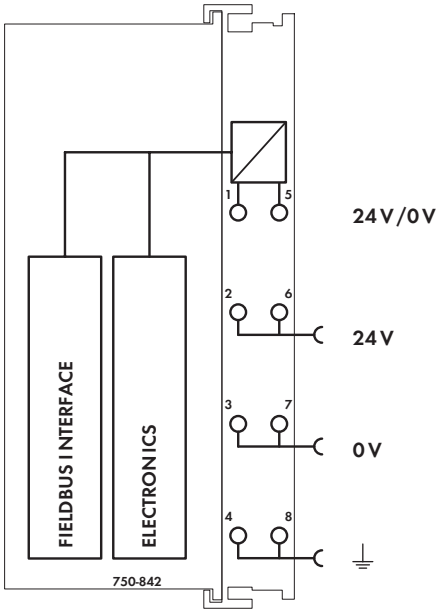

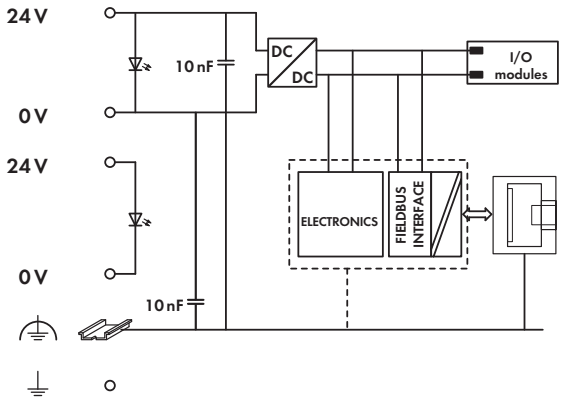

Technical Data

Number of I/O modules	64
Max. input process image	512 bytes
Max. output process image	512 bytes
Max. input variables	512 bytes
Max. output variables	512 bytes
Configuration	automatic
Program memory	128 Kbytes
Data memory	64 Kbytes
Non-volatile memory (retain)	8 Kbytes
Cycle time	< 3ms for 1,000 statements /
	256 dig. I/Os
Power supply	24 V DC (-25 % ... +30 %)
Max. input current (24 V)	500 mA
Power supply efficiency	87 %
Internal current consumption (5 V)	200 mA
Total current for I/O modules (5 V)	1800 mA
Isolation	500V system/supply
Voltage via power jumper contacts	24 V DC (-25 % ... +30 %)
Current via power jumper contacts (max.)	10 A DC

General Specifications

Operating temperature	0 °C ... +55 °C
Wire connection	CAGE CLAMP®
Cross sections	0.08 mm² ... 2.5 mm² / AWG 28 ... 14
Strip lengths	8 ... 9 mm / 0.33 in
Dimensions (mm) W x H x L	51 x 65 x 100
	Height from upper-edge of DIN 35 rail
Weight	197 g
Storage temperature	-25 °C ... +85 °C
Relative air humidity (no condensation)	95 %
Vibration resistance	acc. to IEC 60068-2-6
Shock resistance	acc. to IEC 60068-2-27
Degree of protection	IP20
EMC immunity of interference	acc. to EN 61000-6-2, marine applications
EMC emission of interference	acc. to EN 61000-6-4, marine applications

REV	REVISION DESCRIPTION	LOG NO.	REV'D BY	CHK'D BY	APPRV'D BY	DATE YYYY-MM-DD
G	SEE ECN 21-0532 SUPPORTING DOCUMENTS FOR CHANGES	21-0532	CD	JLW	CHS	2021-07-30

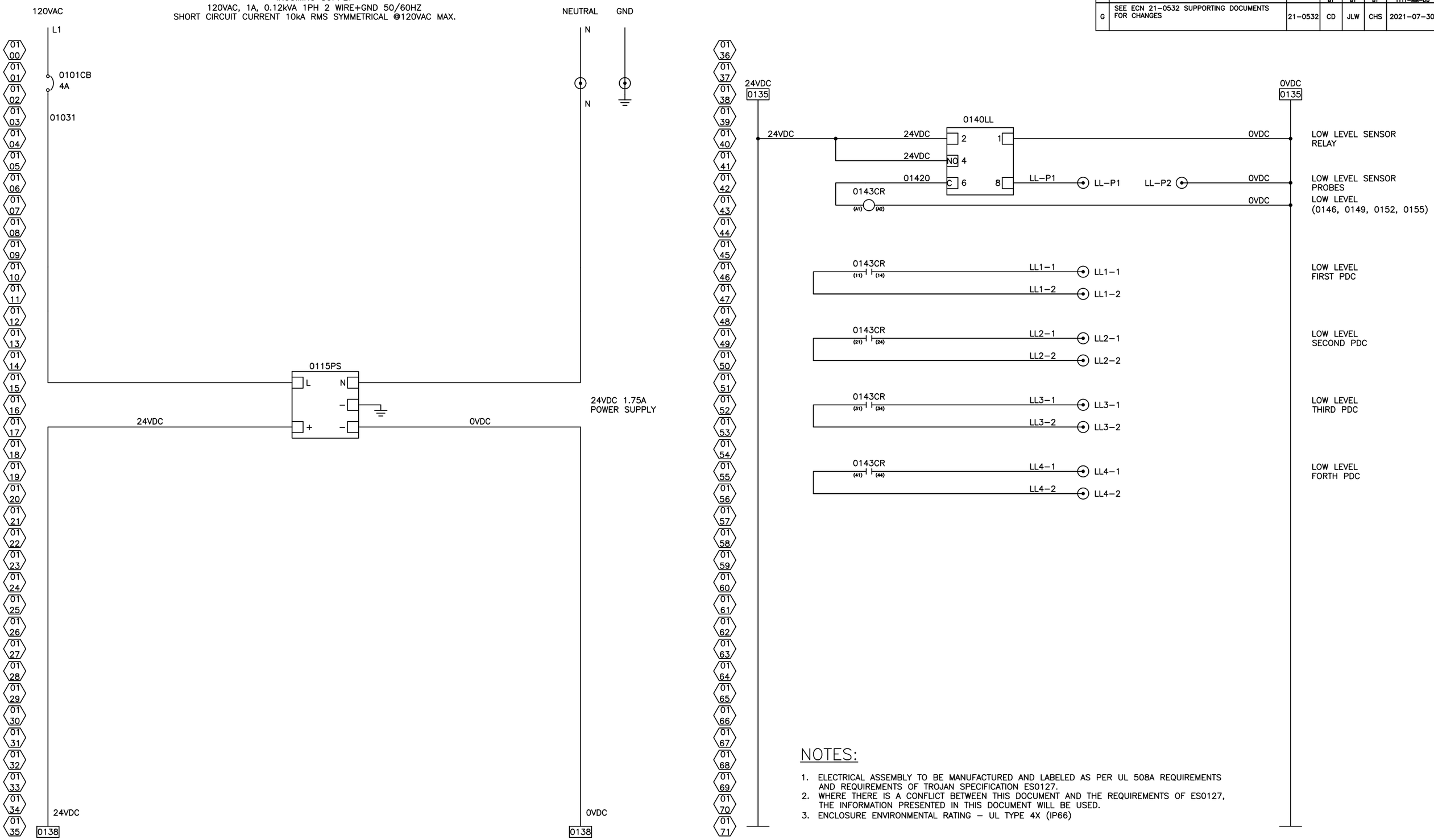

NOTES:

1. ELECTRICAL ASSEMBLY TO BE MANUFACTURED AND LABELED AS PER UL 508A REQUIREMENTS AND REQUIREMENTS OF TROJAN SPECIFICATION ES0127.
2. WHERE THERE IS A CONFLICT BETWEEN THIS DOCUMENT AND THE REQUIREMENTS OF ES0127, THE INFORMATION PRESENTED IN THIS DOCUMENT WILL BE USED.
3. ENCLOSURE ENVIRONMENTAL RATING – UL TYPE 4X (IP66)

WIRE COLOUR CODING LEGEND

DESCRIPTION	DESIGNATION	WIRE
AC CONTROL	L	RED
	N	WHITE
DC CONTROL	24VDC	BLUE
	OVDC	WHITE/BLUE
GROUND	G	GREEN/YELLOW

UNLESS OTHERWISE SPECIFIED:
DIMENSIONS ARE IN INCHES
TOLERANCES: 2 PL DEC ± N/A
3 PL DEC ± N/A
ANGLE DEG ± N/A
REMOVE ALL BURRS, ALL CORNERS
R 0.010 OR BREAK EDGE
▷ – CRITICAL CHARACTERISTIC

TROJANUV
3020 GORE ROAD, LONDON, ONTARIO, CANADA, N5V 4T7

COPYRIGHT © TROJAN TECHNOLOGIES, 2021 . ALL RIGHTS RESERVED.

DESCRIPTION: LCP ASSY, LOW LEVEL SCHEMATIC

THIRD ANGLE PROJECTION

SCALE: 1.0" ON ORIGINAL DWG

DWG NO. 340393G REV G

SHEET 01 OF 02 SIZE D

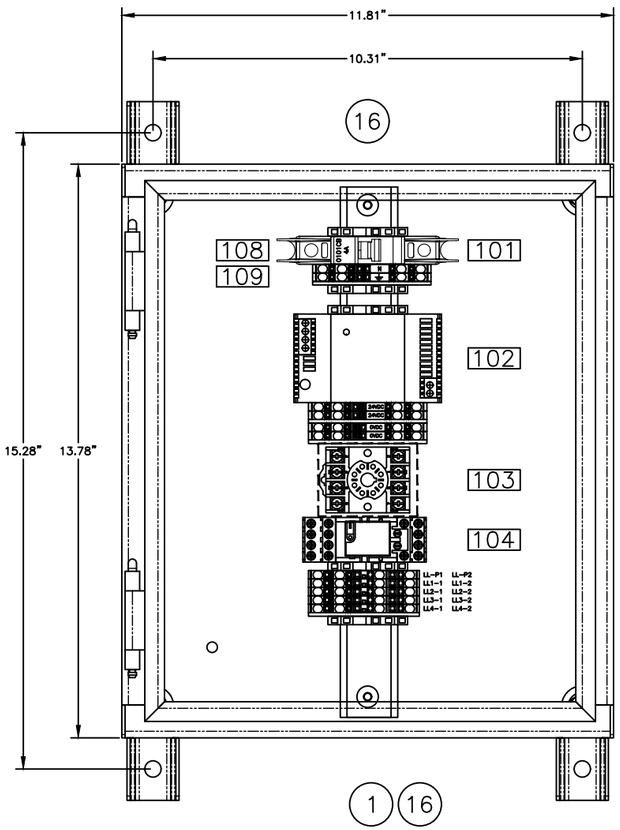

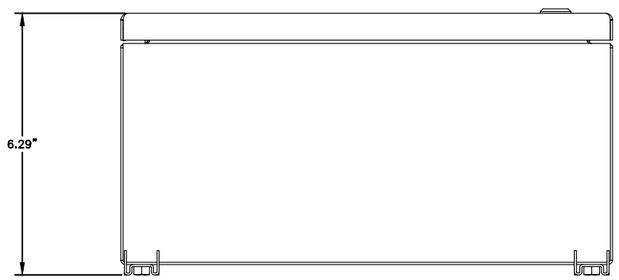

BOTTOM

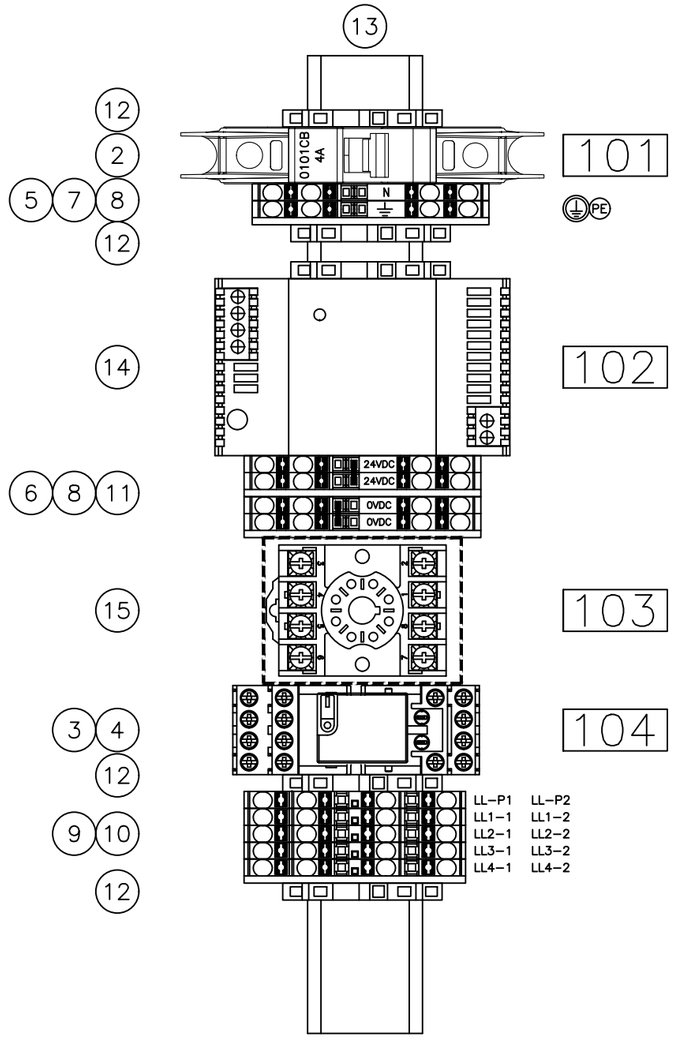

ITEM	QTY	NAMEPLATE TYPE	DESC 1	DESC 2	DESC 3
101	1	EMLP 27x12.5	0101CB	4A MAIN	
102	1	EMLP 27x12.5	0115PS	24VDC 1.75A	
103	1	EMLP 27x12.5	0140LL	LOW LEVEL	
104	1	EMLP 27x12.5	0143CR	RELAY	
105					
106	A/R	US-EML(D12.5)	⏚		
107	1	US-EML(D12.5)	PE		
108	1	EMLP 27x12.5	L1		
109	1	EMLP 27x12.5	N		

TABLE 1

P/N	NOUN CODE	ENCLOSURE TYPE	ITEM 1
340393-304	LCP ASSY, LOW LVL304	304SST	338175-304

BILL OF MATERIALS

ITEM #	QUANTITY	DESCRIPTION	MANUFACTURER	MANUFACTURER #	TROJAN #
1	1	ENCLOSURE ASSY 14x12x6 TYPE 4X	CUSTOM	CUSTOM	TABLE 1
2	1	BREAKER, 4A 1P AC/DC C ABB	ABB	SU201M-C4	917139-MC1040
3	1	RELAY, 6A 24VDC 4PDT 250V	ABB	1SVR405613R1100	917444-M024DC4L
4	1	RELAY, BASE 2/4PDT STD SCREW	ABB	CR-M4SS	917444-M4SS
5	1	TERM BLK, PIT 2.5 QUATTRO GRY	PHOENIX CONTACT	3209578	916049-3209578
6	4	TERM BLK, PIT 2.5 QUATTRO BLU	PHOENIX CONTACT	3209581	916049-3209581
7	1	TERM BLK, PIT 2.5 PE QUAT GND	PHOENIX CONTACT	3209594	916049-3209594
8	3	TERM BLK, END PLT D ST 2.5 QU	PHOENIX CONTACT	3030514	916050-3030514
9	5	TERM BLK, PITTB 2.5 GRY	PHOENIX CONTACT	3210567	916049-3210567
10	1	TERM BLK, END PLT D PITTB 2.5	PHOENIX CONTACT	3211634	916050-3211634
11	2	TERM BLK, JUMPER 2P FBS 2 5	PHOENIX CONTACT	3030161	916050-3030161
12	5	TERM BLK, END STOP CLIPFIX 355	PHOENIX CONTACT	3022276	916050-3022276
13	12.8	DIN RAIL, PERF 35X7.5 PHOENIX	PHOENIX CONTACT	801733	914147
14	1	PS, 24VDC 1P STEP 1.75A	PHOENIX CONTACT	2868648	916282-648
15	1	SENSOR UV3+ LEVEL LOW	TROJAN	7801702	914345-001
16	1	ENCL,MOUNTING BRACKETS SST	HOFFMAN	CMFKSS	916531

TROJANUV
3020 GORE ROAD, LONDON, ONTARIO, CANADA, N5V 4T7
COPYRIGHT © TROJAN TECHNOLOGIES, 2021 . ALL RIGHTS RESERVED.

DESCRIPTION: LCP ASSY, LOW LEVEL PANEL LAYOUT

REVISED BY	CD	DWG NO.	REV
CHECKED BY	JLW	340393G	G
APPROVED BY	CHS		
APPROVAL DATE YYYY-MM-DD	2021-09-30	SHEET 02 OF 02	SIZE D

SCALE: NTS

1.0" ON ORIGINAL DWG (0 0.5 1.0)

Miniature Circuit Breaker SU200M
for branch circuit protection acc. to UL 489

The miniature circuit breaker SU 200 M is ABB's solution for UL 489 branch circuit protection up to 480 Y/277 V AC and 96 V DC. This circuit breaker is an all-round device for AC and DC applications for universal use in North American and global markets due to its approvals acc. to the international standards UL, CSA and IEC. Moreover, SU 200 M is fully compatible with System pro *M* compact® UL 489 accessories.

Features

- High performance MCB with 10 kA interrupting capacity acc. to UL 489 / CSA 22.2 No. 5 and 15 kA breaking capacity acc. to IEC/EN 60947-2
- Certified up to I_n = 40 A at 480 Y/277 V AC acc. to UL 489 / CSA 22.2 No. 5
- Certified for AC and DC use acc. to UL and CSA
- 40 °C reference temperature acc. to UL and CSA
- Current limiting acc. to UL 489
- Clear contact position indication in red/green ("real CPI")

Standards and approvals

Standards	
UL 489	
CSA 22.2 No. 5	
IEC/EN 60947-2	
Approvals	
UL 489	US
CSA 22.2 No. 5	CA
VDE	DE
CCC	CN

General Data		
Standards		UL 489, CSA 22.2 No. 5, IEC/EN 60947-2
Poles		1P, 2P, 3P, 4P
Tripping characteristics		C, K, Z
Rated current I_n		0.2 - 63 A
Rated frequency f		50 / 60 Hz, DC (0 Hz)
Rated insulation voltage U_i acc. to IEC/EN 60664-1		250 V AC (phase to ground), 440 V AC (phase to phase)
Overvoltage category		III
Pollution degree		3
IEC/EN 60947-2		
Rated operational voltage U_e		1P: 230 V AC; 2P, 3P, 4P: 400 V AC
Max. power frequency recovery voltage U_{max}	AC	1P: 253 V AC; 2P, 3P, 4P: 440 V AC
Min. operating voltage		12 V AC, 12 V DC
Rated ultimate short-circuit breaking capacity I_{cu}		15 kA
Rated service short-circuit breaking capacity I_{cs}		≤ 40 A: 11.25 kA > 40 A: 7.5 kA
Rated impulse withstand voltage U_{imp} (1.2/50µs)		4 kV (test voltage 6.2 kV at sea level, 5 kV at 2,000 m)
Dielectric test voltage		2 kV (50 / 60Hz, 1 min.)
Reference temperature for tripping characteristics		30 °C
Electrical endurance		I_n < 30 A: 20,000 ops (AC), I_n ≥ 30 A: 10,000 ops. (AC); 1 cycle (2 s - ON, 13 s - OFF, I_n ≤ 32 A), 1 cycle (2 s - ON, 28 s - OFF, I_n > 32 A)
UL / CSA		
Rated voltage	AC	1P: 277 V AC up to 40 A for C, Z char.,
	AC	277 V AC up to 35 A for K char., 240 V AC
	AC	2P, 3P, 4P: 480 Y / 277 V AC up to 40 A for C, Z char.,
	AC	480 Y / 277 V AC up to 35 A for K char., 240 V AC
	DC	1P: 48 V DC; 2P: 96 V DC (2p in series)
Rated interrupting capacity acc. to UL 1077		–
Short-circuit current rating acc. to UL 489		10 kA
Application		–
Reference temperature for tripping characteristics		40 °C
Electrical endurance		6,000 ops (AC), 6,000 ops. (DC); 1 cycle (1 s - ON, 9 s - OFF)
Mechanical data		
Housing		Insulation group II, RAL 7035
Toggle		Insulation group II, black, sealable
Contact position indication		Real CPI (green OFF / red ON)
Protection degree acc. to DIN EN 60529		IP20*, IP40 in enclosure with cover
Mechanical endurance		20,000 ops.
Shock resistance acc. to IEC/EN 60068-2-27		25 g - 2 shocks - 13 ms
Vibration resistance acc. to IEC/EN 60068-2-6		5g - 20 cycles at 5…150…5 Hz with load 0.8 I_n
Environmental conditions (damp heat cyclic) acc. to IEC/EN 60068-2-30		28 cycles with 55°C/90-96% and 25°C/95-100%
Ambient temperature		-25 ... +55°C
Storage temperature		-40 ... +70 °C
Installation		
Terminal		Failsafe bi-directional cylinder-lift terminal
Cross-section of conductors (top/bottom)		solid, stranded: 35 mm² / 35 mm² flexible: 25 mm² / 25 mm² 18 – 4 AWG
Cross-section of busbars (top/bottom)		10 mm² / 10 mm² 18 – 8 AWG
Torque		2.8 Nm AWG 18-16: 13.3 in-lbs. AWG 14-10: 17.7 in-lbs. AWG 8-4: 39.8 in-lbs.
Screwdriver		No. 2 Pozidrive
Mounting		On DIN rail 35 mm acc. to EN 60715 by fast clip
Mounting position		any
Supply		optional
Dimensions and weight		
Mounting dimensions acc. to DIN 43880		Mounting dimension 3
Pole dimensions (H x D x W)		111 x 69 x 17.5 mm
Pole weight		approx. 125 g
Combination with auxiliary elements		
Auxiliary contact		Yes
Signal contact		Yes
Shunt trip		Yes

Tripping characteristics

Acc. to	Tripping characte-ristics	Rated current	Thermal release [1]			Electromagnetic release [2]		
			Currents: conventional non-tripping current	conventional tripping current	Tripping time	Range of instantaneous tripping		Tripping time
		I_n	I_1	I_2				
IEC/EN 60947-2	C	0.5 to 63 A	$1.05 \cdot I_n$	$1.3 \cdot I_n$	> 1 h < 1 h [3]	$5 \cdot I_n$	$10 \cdot I_n$	> 0.2 s < 0.2 s
	K	0.2 to 63 A	$1.05 \cdot I_n$	$1.3 \cdot I_n$	> 1 h < 1 h [3]	$10 \cdot I_n$	$14 \cdot I_n$	> 0.2 s < 0.2 s
	Z	0.5 to 63 A	$1.05 \cdot I_n$	$1.3 \cdot I_n$	> 1 h < 1 h [3]	$2 \cdot I_n$	$3 \cdot I_n$	> 0.2 s < 0.2 s

[1] The thermal releases are calibrated to a nominal reference ambient temperature of 30 °C.
In the case of higher ambient temperatures, the current values fall by approx. 6 % for each 10 K temperature rise.

[2] The indicated tripping values of electromagnetic tripping devices apply to a frequency of 50/60 Hz. The thermal release operates independent of frequency.

[3] As from operating temperature (after I_1 > 1h)

C characteristic

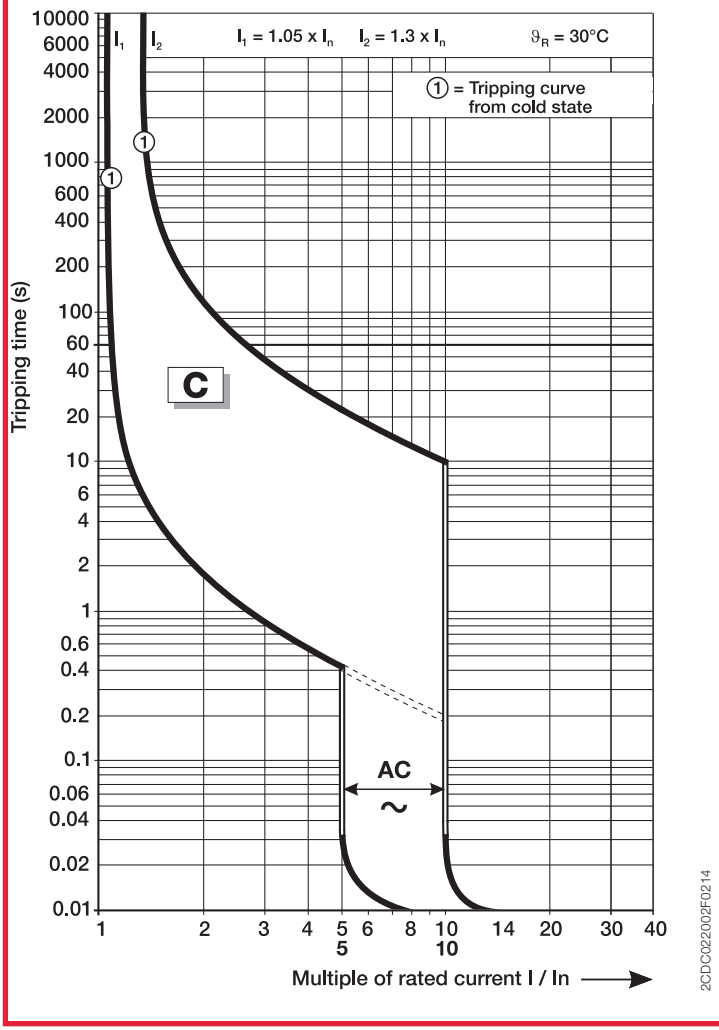

K characteristic

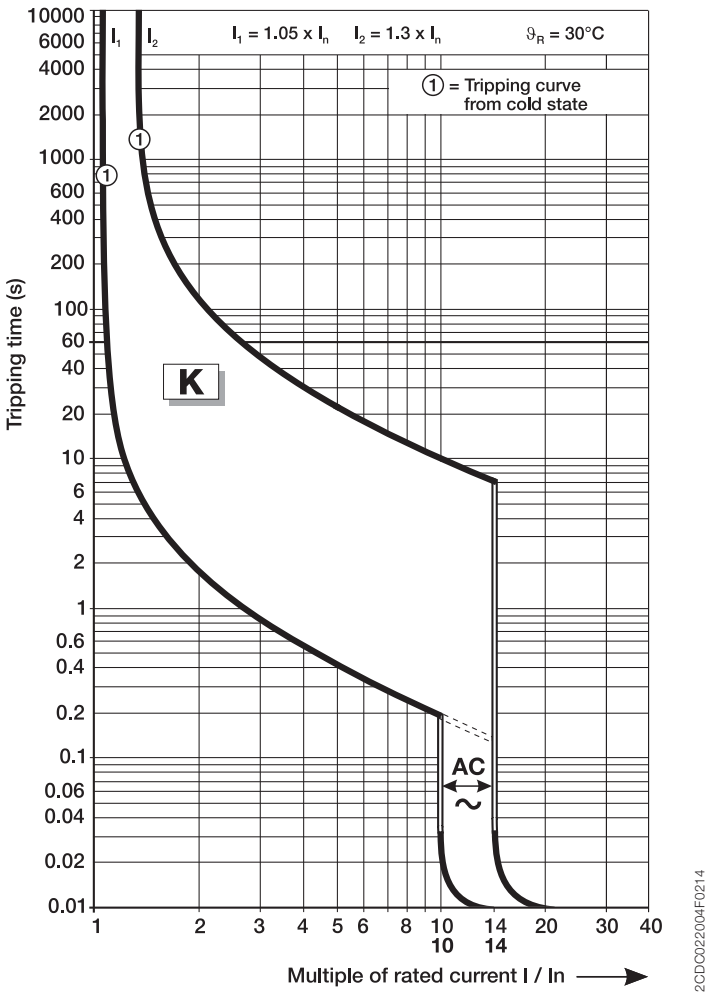

Z characteristic

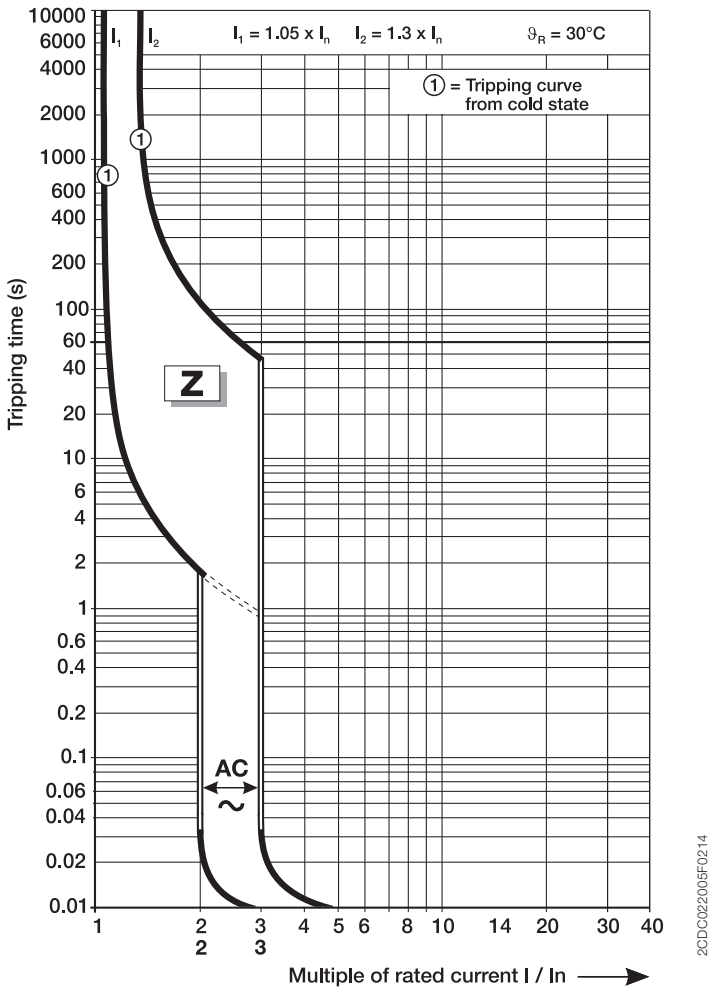

Type	Voltage	Current	Power Factor	Phase	I_{peak}	I^2t
		A			kA	kA^2S
SU203M-K0.2	480Y/277	10000	0.45-0.5	3	0.026	0.008
SU203M-K7	480Y/277	4095	0.45-0.5	3	2.3	11.9
SU203M-K7	480Y/277	7500	0.45-0.5	3	3.4	16.7
SU203M-K7	480Y/277	10000	0.45-0.5	3	4.6	19.0
SU203M-K20	480Y/277	4095	0.45-0.5	3	2.9	18.1
SU203M-K20	480Y/277	7500	0.45-0.5	3	4.3	28.1
SU203M-K20	480Y/277	10000	0.45-0.5	3	6.4	34.6
SU203M-K35	480Y/277	4095	0.45-0.5	3	3.4	27.9
SU203M-K35	480Y/277	7500	0.45-0.5	3	4.7	33.1
SU203M-K35	480Y/277	10000	0.45-0.5	3	9.0	72.0
SU203M-C40	480Y/277	4095	0.45-0.5	3	3.4	22.8
SU203M-C40	480Y/277	7500	0.45-0.5	3	5.1	42.5
SU203M-C40	480Y/277	10000	0.45-0.5	3	9.3	74.6
SU201M-K0.2	277	10000	0.45-0.5	1	0.7	0.092
SU201M-K7	277	4095	0.45-0.5	1	2.5	10.5
SU201M-K7	277	7500	0.45-0.5	1	3.4	16.9
SU201M-K7	277	10000	0.45-0.5	1	3.4	14.5
SU201M-K20	277	4095	0.45-0.5	1	2.8	14.7
SU201M-K20	277	7500	0.45-0.5	1	4.1	23.5
SU201M-K20	277	10000	0.45-0.5	1	4.7	32.5
SU201M-K35	277	4095	0.45-0.5	1	3.0	19.8
SU201M-K35	277	7500	0.45-0.5	1	4.7	36.5
SU201M-K35	277	10000	0.45-0.5	1	4.4	22.1
SU201M-C40	277	4095	0.45-0.5	1	3.6	22.9
SU201M-C40	277	7500	0.45-0.5	1	5.3	52.6
SU201M-C40	277	10000	0.45-0.5	1	5.9	44.9
SU203M-K63	240	4095	0.45-0.5	3	3.6	19.9
SU203M-K63	240	7500	0.45-0.5	3	5.1	33.0
SU203M-K63	240	10000	0.45-0.5	3	6.3	43.3
SU201M-K63	240	4095	0.45-0.5	1	3.9	33.8
SU201M-K63	240	7500	0.45-0.5	1	5.2	43.8
SU201M-K63	240	10000	0.45-0.5	1	6.5	61.8

Accessory overview

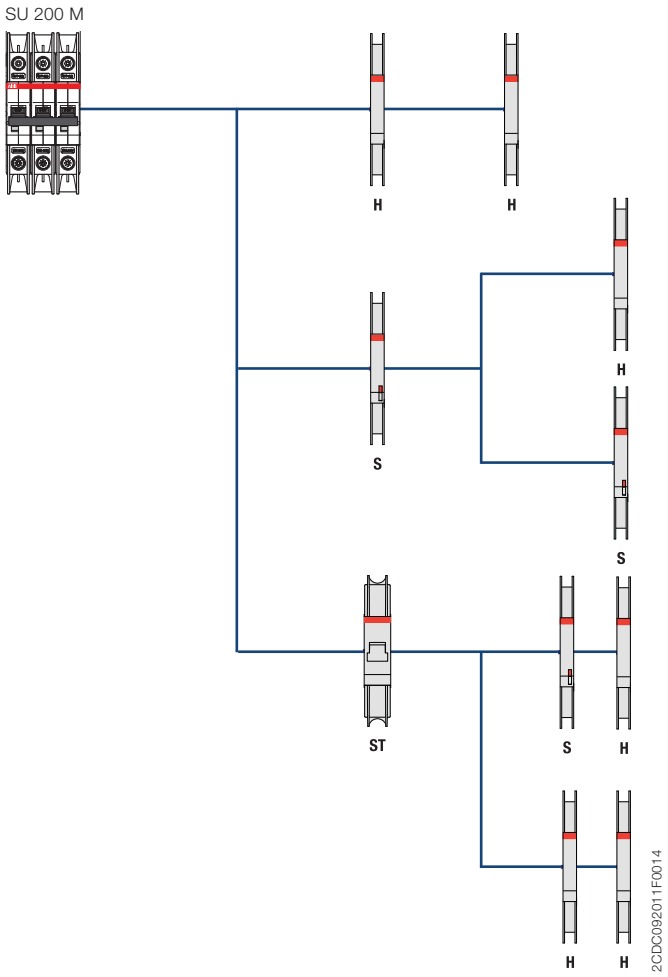

H	Auxiliary contact (change-over contact)	S2C-H6RU
S/H	Signal contact	S2C-S6RU
ST	Shunt trip	S2C-A...U

The certification of the Accessories has been done with one accessory only.

The number of electrical operations is limited to 4,000 operations for the maximum combinations and the combinations including shunt trips.

Dimensional drawing

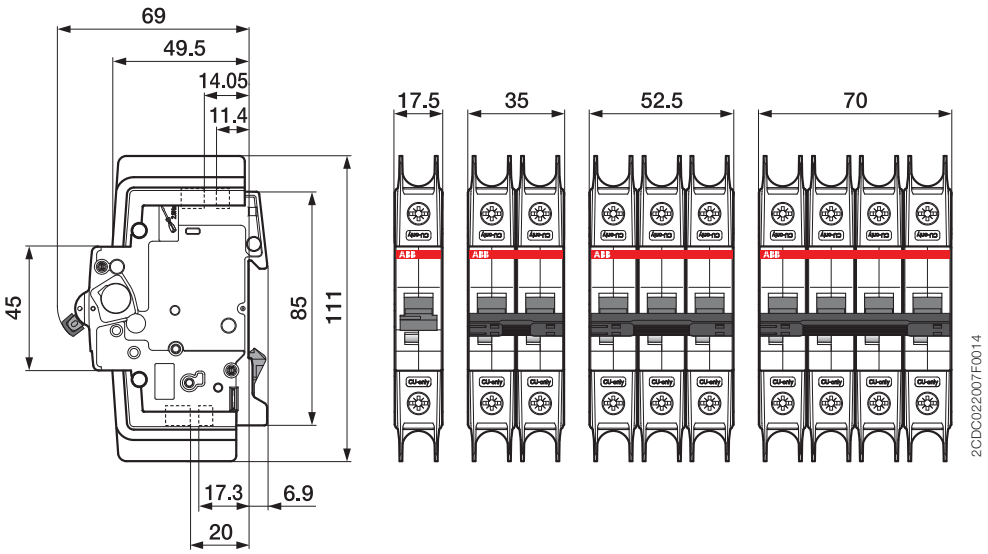

Pluggable interface relays CR-M
Miniature relays

Pluggable interface relays are used for electrical isolation, amplification and signal matching between the electronic controlling, e.g. PLC (programmable logic controller), PC or field bus systems and the sensor / actuator level. They don't use additional internal protective circuits and thus are overload-proof against short-time variations like current or voltage peaks.

2CDC 291 002 S0015

Characteristics
- Standard miniature relays with mechanical status indication
- 13 different rated control supply voltages:
  DC versions: 12 V, 24 V, 48 V, 60 V, 110 V, 125 V, 220 V
  AC versions: 24 V, 48 V, 60 V, 110 V, 120 V, 230 V
- Output: 2 c/o (SPDT) contacts (12 A), 3 c/o (SPDT) contacts (10 A) or 4 c/o (SPDT) contacts (6 A)
- Available with or without LED
- 4 c/o (SPDT) contact version optionally equipped with gold contacts, LED and free wheeling diode
- Integrated test button for manual actuation and locking of output contacts (DC coil = blue, AC coil = orange) that can be removed if necessary
- Cadmium-free contact material
- Suited for logical and standard sockets
- Width on socket: 27 mm (1.063 in)
- Pluggable function modules: reverse polarity protection/ free wheeling diode, LED indication, RC elements, overvoltage protection

Approvals

	ANSI/UL 508, CAN/CSA C22.2 No.14	
	CAN/CSA C22.2 No.14	
	VDE	(except 125 V DC devices)
	EAC	
	Lloyds Register	(only devices with 4 c/o (SPDT) contacts)
	CCC	
	RMRS	(except 60 V and 125 V devices)

Marks

CE CE

Type	Rated control supply voltage U_s	Order code
CR-M012DC2L	12 V DC	1SVR 405 611 R4100
CR-M024DC2L	24 V DC	1SVR 405 611 R1100
CR-M048DC2L	48 V DC	1SVR 405 611 R6100
CR-M060DC2L	60 V DC	1SVR 405 611 R4300
CR-M110DC2L	110 V DC	1SVR 405 611 R8100
CR-M125DC2L	125 V DC	1SVR 405 611 R8300
CR-M220DC2L	220 V DC	1SVR 405 611 R9100
CR-M024AC2L	24 V AC	1SVR 405 611 R0100
CR-M048AC2L	48 V AC	1SVR 405 611 R5100
CR-M110AC2L	110 V AC	1SVR 405 611 R7100
CR-M120AC2L	120 V AC	1SVR 405 611 R2100
CR-M230AC2L	230 V AC	1SVR 405 611 R3100

Interface relays with LED, 3 c/o (SPDT) contacts: 250 V, 10 A

CR-M012DC3L	12 V DC	1SVR 405 612 R4100
CR-M024DC3L	24 V DC	1SVR 405 612 R1100
CR-M048DC3L	48 V DC	1SVR 405 612 R6100
CR-M060DC3L	60 V DC	1SVR 405 612 R4300
CR-M110DC3L	110 V DC	1SVR 405 612 R8100
CR-M125DC3L	125 V DC	1SVR 405 612 R8300
CR-M220DC3L	220 V DC	1SVR 405 612 R9100
CR-M024AC3L	24 V AC	1SVR 405 612 R0100
CR-M048AC3L	48 V AC	1SVR 405 612 R5100
CR-M110AC3L	110 V AC	1SVR 405 612 R7100
CR-M120AC3L	120 V AC	1SVR 405 612 R2100
CR-M230AC3L	230 V AC	1SVR 405 612 R3100

Interface relays with LED, 4 c/o (SPDT) contacts: 250 V, 6 A

CR-M012DC4L	12 V DC	1SVR 405 613 R4100
CR-M024DC4L	24 V DC	1SVR 405 613 R1100
CR-M048DC4L	48 V DC	1SVR 405 613 R6100
CR-M060DC4L	60 V DC	1SVR 405 613 R4300
CR-M110DC4L	110 V DC	1SVR 405 613 R8100
CR-M125DC4L	125 V DC	1SVR 405 613 R8300
CR-M220DC4L	220 V DC	1SVR 405 613 R9100
CR-M024AC4L	24 V AC	1SVR 405 613 R0100
CR-M048AC4L	48 V AC	1SVR 405 613 R5100
CR-M110AC4L	110 V AC	1SVR 405 613 R7100
CR-M120AC4L	120 V AC	1SVR 405 613 R2100
CR-M230AC4L	230 V AC	1SVR 405 613 R3100

Interface relays with LED and free wheeling diode, 4 c/o (SPDT) contacts: 250 V, 6 A

CR-M024DC4LD	24 V DC	1SVR 405 614 R1100

Interface relays with gold contacts, 4 c/o (SPDT) contacts: 250 V, 6 A

CR-M024DC4G	24 V DC	1SVR 405 618 R1000
CR-M024AC4G	24 V AC	1SVR 405 618 R0000
CR-M110AC4G	110 V AC	1SVR 405 618 R7000
CR-M230AC4G	230 V AC	1SVR 405 618 R3000

CR-P/M 62C	6-24 V AC/DC	red, for DC: A1+, A2-	1SVR 405 655 R0000
CR-P/M 62CV	6-24 V AC/DC	green, for DC: A1+, A2-	1SVR 405 655 R1000
CR-P/M 62D	24-60 V AC/DC	red, for DC: A1+, A2-	1SVR 405 655 R4000
CR-P/M 62DV	24-60 V AC/DC	green, for DC: A1+, A2-	1SVR 405 655 R4100
CR-P/M 92C	110-230 V AC / 110 V DC	red, for DC: A1+, A2-	1SVR 405 655 R0100
CR-P/M 92CV	110-230 V AC / 110 V DC	green, for DC: A1+, A2-	1SVR 405 655 R1100

Varistor - Overvoltage protection

CR-P/M 72	24 V AC		1SVR 405 656 R0000
CR-P/M 72A	115 V AC		1SVR 405 656 R1000
CR-P/M 82	230 V AC		1SVR 405 656 R2000

Plug to replace the test button (Packing unit = 100 pieces)

CR-MP			1SVR 405 658 R2000

Sockets

Type	Version	Connection	Order code

Logical sockets

CR-M2LS	for 2 c/o (SPDT) contacts	screw	1SVR 405 651 R1100
CR-M3LS	for 3 c/o (SPDT) contacts	screw	1SVR 405 651 R2100
CR-M4LS	for 2 or 4 c/o (SPDT) contacts	screw	1SVR 405 651 R3100
CR-M2LC	for 2 c/o (SPDT) contacts	spring	1SVR 405 651 R1200
CR-M4LC	for 2 or 4 c/o (SPDT) contacts	spring	1SVR 405 651 R3200

Standard sockets

CR-M2SS	for 2 c/o (SPDT) contacts	screw	1SVR 405 651 R1000
CR-M3SS	for 3 c/o (SPDT) contacts	screw	1SVR 405 651 R2000
CR-M4SS	for 2 or 4 c/o (SPDT) contacts	screw	1SVR 405 651 R3000
CR-M2SF	for 2 c/o (SPDT) contacts	fork type screw	1SVR 405 651 R1300
CR-M4SF	for 2 or 4 c/o (SPDT) contacts	fork type screw	1SVR 405 651 R3300

Accessories for CR-M sockets

CR-MH	Plastic holder	1SVR 405 659 R1000
CR-MH1	Metall holder	1SVR 405 659 R1100
CR-MJ	Jumper bar for sockets with screw clamps	1SVR 405 658 R6000
CR-MM	Marker	1SVR 405 658 R1000

Operating controls

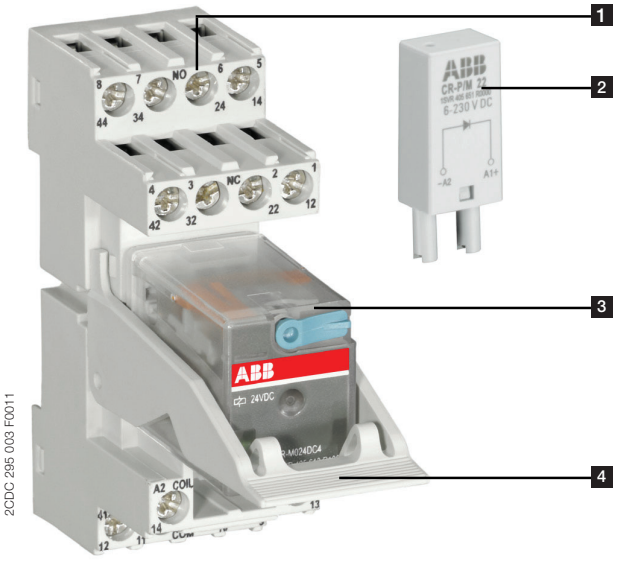

1 **Socket**

2 **Pluggable function module**

3 **Interface relay**

4 **Holder**

Application

Interface relays are electromechanic and electronic input and output modules for electrical isolation, levelling, noise suppression or signal amplifi cation between control unit and process.

Operating mode

When control supply voltage is applied, the output contacts get closed. When control supply voltage is switched off, the contacts fall back into their starting position. Manual operation and locking of the output relays is possible via the integrated test button.

Note:

During operation of the relay the test button is warming up. To manually press the test button, first switch off the supply voltage of the relay and wait for a while until the button cools down (or press without delay, using protective gloves or insulated tools).

Press the button smoothly and quickly. As long as the button is pressed the n/o contacts are closed. Releasing the button opens the n/o contacts. A 90 degree rotation of the test button closes the n/o contacts permanently. Reverse rotation of the test button re-opens the n/o contacts.

Feed-through terminal block - PT 2,5-QUATTRO - 3209578

Please be informed that the data shown in this PDF Document is generated from our Online Catalog. Please find the complete data in the user's documentation. Our General Terms of Use for Downloads are valid (http://phoenixcontact.com/download)

Feed-through terminal block, Connection method: Push-in connection, Cross section: 0.14 mm² - 4 mm², AWG: 26 - 12, Width: 5.2 mm, Height: 35.3 mm, Color: gray, Mounting type: NS 35/7,5, NS 35/15

Why buy this product

- The Push-in connection terminal blocks are characterized by the system features of the CLIPLINE complete system and by easy and tool-free wiring of conductors with ferrules or solid conductors
- The compact design and front connection enable wiring in a confined space
- In addition to the testing facility in the double function shaft, all terminal blocks provide an additional test connection
- Tested for railway applications

Key Commercial Data

Packing unit	50 STK
Weight per Piece (excluding packing)	10.6 g
Custom tariff number	85369040
Country of origin	Germany

Technical data

General

Number of levels	1
Number of connections	4
Potentials	1
Nominal cross section	2.5 mm²
Color	gray
Insulating material	PA
Flammability rating according to UL 94	V0
Area of application	Railway industry
	Machine building
	Plant engineering
	Process industry

Feed-through terminal block - PT 2,5-QUATTRO - 3209578

Technical data

General

Rated surge voltage	8 kV
Degree of pollution	3
Overvoltage category	III
Insulating material group	I
Maximum load current	28 A (In case of a 4 mm² conductor cross section, the maximum load current must not be exceeded by the total current of all connected conductors.)
Nominal current I_N	24 A (with 2.5 mm² conductor connection cross section)
Nominal voltage U_N	800 V
Open side panel	Yes
Shock protection test specification	DIN EN 50274 (VDE 0660-514):2002-11
Back of the hand protection	guaranteed
Finger protection	guaranteed
Result of surge voltage test	Test passed
Surge voltage test setpoint	9.8 kV
Result of power-frequency withstand voltage test	Test passed
Power frequency withstand voltage setpoint	2 kV
Result of the test for mechanical stability of terminal points (5 x conductor connection)	Test passed
Result of bending test	Test passed
Bending test rotation speed	10 rpm
Bending test turns	135
Bending test conductor cross section/weight	0.14 mm² / 0.2 kg
	2.5 mm² / 0.7 kg
	4 mm² / 0.9 kg
Tensile test result	Test passed
Conductor cross section tensile test	0.14 mm²
Tractive force setpoint	10 N
Conductor cross section tensile test	2.5 mm²
Tractive force setpoint	50 N
Conductor cross section tensile test	4 mm²
Tractive force setpoint	60 N
Result of tight fit on support	Test passed
Tight fit on carrier	NS 35
Setpoint	1 N
Result of voltage-drop test	Test passed
Requirements, voltage drop	≤ 3.2 mV
Result of temperature-rise test	Test passed
Short circuit stability result	Test passed
Conductor cross section short circuit testing	2.5 mm²
Short-time current	0.3 kA

Feed-through terminal block - PT 2,5-QUATTRO - 3209578

Technical data

General

Conductor cross section short circuit testing	4 mm²
Short-time current	0.48 kA
Result of aging test	Test passed
Ageing test for screwless modular terminal block temperature cycles	192
Result of thermal test	Test passed
Proof of thermal characteristics (needle flame) effective duration	30 s
Oscillation, broadband noise test result	Test passed
Test specification, oscillation, broadband noise	DIN EN 50155 (VDE 0115-200):2008-03
Test spectrum	Service life test category 2, bogie mounted
Test frequency	f_1 = 5 Hz to f_2 = 250 Hz
ASD level	6.12 $(m/s^2)^2$/Hz
Acceleration	3.12 g
Test duration per axis	5 h
Test directions	X-, Y- and Z-axis
Shock test result	Test passed
Test specification, shock test	DIN EN 50155 (VDE 0115-200):2008-03
Shock form	Half-sine
Acceleration	30g
Shock duration	18 ms
Number of shocks per direction	3
Test directions	X-, Y- and Z-axis (pos. and neg.)
Relative insulation material temperature index (Elec., UL 746 B)	130 °C
Temperature index of insulation material (DIN EN 60216-1 (VDE 0304-21))	125 °C
Static insulating material application in cold	-60 °C
Flame test method (DIN EN 60695-11-10)	V0
Oxygen index (DIN EN ISO 4589-2)	>32 %
	2
	passed
	passed
	passed
	28 MJ/kg
	HL 1 - HL 3
	HL 1 - HL 3
	HL 1 - HL 3
	HL 1 - HL 3

Dimensions

Width	5.2 mm
End cover width	2.2 mm
Length	72.2 mm

Feed-through terminal block - PT 2,5-QUATTRO - 3209578

Technical data

Dimensions

Height	35.3 mm
Height NS 35/7,5	36.8 mm
Height NS 35/15	44.3 mm

Connection data

Connection method	Push-in connection
Connection in acc. with standard	IEC 60947-7-1
Conductor cross section solid min.	0.14 mm²
Conductor cross section solid max.	4 mm²
Conductor cross section AWG min.	26
Conductor cross section AWG max.	12
Conductor cross section flexible min.	0.14 mm²
Conductor cross section flexible max.	2.5 mm²
Min. AWG conductor cross section, flexible	26
Max. AWG conductor cross section, flexible	14
Conductor cross section flexible, with ferrule without plastic sleeve min.	0.14 mm²
Conductor cross section flexible, with ferrule without plastic sleeve max.	2.5 mm²
Conductor cross section flexible, with ferrule with plastic sleeve min.	0.14 mm²
Conductor cross section flexible, with ferrule with plastic sleeve max.	2.5 mm²
2 conductors with same cross section, stranded, TWIN ferrules with plastic sleeve, max.	0.5 mm²
Conductor cross section AWG min.	26
Conductor cross section AWG max.	12
Stripping length	8 mm ... 10 mm
Internal cylindrical gage	A3

Standards and Regulations

Connection in acc. with standard	CSA
	IEC 60947-7-1
Flammability rating according to UL 94	V0

Classifications

eCl@ss

eCl@ss 4.0	27141121
eCl@ss 4.1	27141121
eCl@ss 5.0	27141120
eCl@ss 5.1	27141120
eCl@ss 6.0	27141120
eCl@ss 7.0	27141120
eCl@ss 8.0	27141120
eCl@ss 9.0	27141120

Feed-through terminal block - PT 2,5-QUATTRO - 3209578

Classifications

ETIM

ETIM 2.0	EC000897
ETIM 3.0	EC000897
ETIM 4.0	EC000897
ETIM 5.0	EC000897

UNSPSC

UNSPSC 6.01	30211811
UNSPSC 7.0901	39121410
UNSPSC 11	39121410
UNSPSC 12.01	39121410
UNSPSC 13.2	39121410

Approvals

Approvals

Approvals

CSA / UL Recognized / VDE Zeichengenehmigung / cUL Recognized / RS / ABS / NK / IECEE CB Scheme / BV / EAC / NK / EAC / DNV GL / cULus Recognized

Ex Approvals

ATEX / IECEx / EAC Ex

Approvals submitted

Approval details

CSA

	B	C
mm²/AWG/kcmil	26-12	26-12
Nominal current IN	20 A	20 A
Nominal voltage UN	600 V	600 V

UL Recognized

	B	C
mm²/AWG/kcmil	26-12	26-12

Feed-through terminal block - PT 2,5-QUATTRO - 3209578

Approvals

	B	C
Nominal current IN	20 A	20 A
Nominal voltage UN	600 V	600 V

VDE Zeichengenehmigung

mm²/AWG/kcmil	0.2-2.5
Nominal current IN	24 A
Nominal voltage UN	800 V

cUL Recognized

	B	C
mm²/AWG/kcmil	26-12	26-12
Nominal current IN	20 A	20 A
Nominal voltage UN	600 V	600 V

RS

ABS

NK

IECEE CB Scheme

mm²/AWG/kcmil	0.2-2.5
Nominal voltage UN	800 V

BV

EAC

NK

EAC

Feed-through terminal block - PT 2,5-QUATTRO - 3209578

Approvals

DNV GL

cULus Recognized

Phoenix Contact 2016 © - all rights reserved
http://www.phoenixcontact.com

Feed-through terminal block - PT 2,5-QUATTRO BU - 3209581

Please be informed that the data shown in this PDF Document is generated from our Online Catalog. Please find the complete data in the user's documentation. Our General Terms of Use for Downloads are valid (http://phoenixcontact.com/download)

Feed-through terminal block, Connection method: Push-in connection, Cross section: 0.14 mm² - 4 mm², AWG: 26 - 12, Width: 5.2 mm, Height: 35.3 mm, Color: blue, Mounting type: NS 35/7,5, NS 35/15

Why buy this product

- The Push-in connection terminal blocks are characterized by the system features of the CLIPLINE complete system and by easy and tool-free wiring of conductors with ferrules or solid conductors
- The compact design and front connection enable wiring in a confined space
- In addition to the testing facility in the double function shaft, all terminal blocks provide an additional test connection
- Tested for railway applications

Key Commercial Data

Packing unit	50 STK
Weight per Piece (excluding packing)	10.65 g
Custom tariff number	85369040
Country of origin	Germany

Technical data

General

Number of levels	1
Number of connections	4
Potentials	1
Nominal cross section	2.5 mm²
Color	blue
Insulating material	PA
Flammability rating according to UL 94	V0
Area of application	Railway industry
	Machine building
	Plant engineering
	Process industry

Feed-through terminal block - PT 2,5-QUATTRO BU - 3209581

Technical data

General

Rated surge voltage	8 kV
Degree of pollution	3
Overvoltage category	III
Insulating material group	I
Maximum load current	28 A (In case of a 4 mm² conductor cross section, the maximum load current must not be exceeded by the total current of all connected conductors.)
Nominal current I_N	24 A (with 2.5 mm² conductor connection cross section)
Nominal voltage U_N	800 V
Open side panel	Yes

Dimensions

Width	5.2 mm
End cover width	2.2 mm
Length	72.2 mm
Height	35.3 mm
Height NS 35/7,5	36.8 mm
Height NS 35/15	44.3 mm

Connection data

Connection method	Push-in connection
Connection in acc. with standard	IEC 60947-7-1
Conductor cross section solid min.	0.14 mm²
Conductor cross section solid max.	4 mm²
Conductor cross section AWG min.	26
Conductor cross section AWG max.	12
Conductor cross section flexible min.	0.14 mm²
Conductor cross section flexible max.	2.5 mm²
Min. AWG conductor cross section, flexible	26
Max. AWG conductor cross section, flexible	14
Conductor cross section flexible, with ferrule without plastic sleeve min.	0.14 mm²
Conductor cross section flexible, with ferrule without plastic sleeve max.	2.5 mm²
Conductor cross section flexible, with ferrule with plastic sleeve min.	0.14 mm²
Conductor cross section flexible, with ferrule with plastic sleeve max.	2.5 mm²
2 conductors with same cross section, stranded, TWIN ferrules with plastic sleeve, max.	0.5 mm²
Conductor cross section AWG min.	26
Conductor cross section AWG max.	12
Stripping length	8 mm ... 10 mm
Internal cylindrical gage	A3

Standards and Regulations

Connection in acc. with standard	CSA

Feed-through terminal block - PT 2,5-QUATTRO BU - 3209581

Technical data

Standards and Regulations

	IEC 60947-7-1
Flammability rating according to UL 94	V0

Classifications

eCl@ss

eCl@ss 4.0	27141121
eCl@ss 4.1	27141121
eCl@ss 5.0	27141120
eCl@ss 5.1	27141120
eCl@ss 6.0	27141120
eCl@ss 7.0	27141120
eCl@ss 8.0	27141120
eCl@ss 9.0	27141120

ETIM

ETIM 2.0	EC000897
ETIM 3.0	EC000897
ETIM 4.0	EC000897
ETIM 5.0	EC000897

UNSPSC

UNSPSC 6.01	30211811
UNSPSC 7.0901	39121410
UNSPSC 11	39121410
UNSPSC 12.01	39121410
UNSPSC 13.2	39121410

Approvals

Approvals

Approvals

CSA / UL Recognized / VDE Zeichengenehmigung / cUL Recognized / RS / ABS / NK / IECEE CB Scheme / BV / EAC / NK / EAC / DNV GL / cULus Recognized

Ex Approvals

ATEX / IECEx / EAC Ex

Approvals submitted

Feed-through terminal block - PT 2,5-QUATTRO BU - 3209581

Approvals

Approval details

CSA

	B	C
mm²/AWG/kcmil	26-12	26-12
Nominal current IN	20 A	20 A
Nominal voltage UN	600 V	600 V

UL Recognized

	B	C
mm²/AWG/kcmil	26-12	26-12
Nominal current IN	20 A	20 A
Nominal voltage UN	600 V	600 V

VDE Zeichengenehmigung

mm²/AWG/kcmil	0.2-2.5
Nominal current IN	24 A
Nominal voltage UN	800 V

cUL Recognized

	B	C
mm²/AWG/kcmil	26-12	26-12
Nominal current IN	20 A	20 A
Nominal voltage UN	600 V	600 V

RS

ABS

NK

Feed-through terminal block - PT 2,5-QUATTRO BU - 3209581

Approvals

IECEE CB Scheme

mm²/AWG/kcmil	0.2-2.5
Nominal voltage UN	800 V

BV

EAC

NK

EAC

DNV GL

cULus Recognized

Phoenix Contact 2016 © - all rights reserved
http://www.phoenixcontact.com

Ground modular terminal block - PT 2,5-QUATTRO-PE - 3209594

Please be informed that the data shown in this PDF Document is generated from our Online Catalog. Please find the complete data in the user's documentation. Our General Terms of Use for Downloads are valid (http://phoenixcontact.com/download)

Ground modular terminal block, Connection method: Push-in connection, Cross section: 0.14 mm² - 4 mm², AWG: 26 - 12, Width: 5.2 mm, Height: 35.3 mm, Color: green-yellow, Mounting type: NS 35/7,5, NS 35/15

Why buy this product

- The Push-in connection terminal blocks are characterized by the system features of the CLIPLINE complete system and by easy and tool-free wiring of conductors with ferrules or solid conductors
- The compact design and front connection enable wiring in a confined space
- In addition to the testing facility in the double function shaft, all terminal blocks provide an additional test connection
- Tested for railway applications

Key Commercial Data

Packing unit	50 STK
Weight per Piece (excluding packing)	13.55 g
Custom tariff number	85369040
Country of origin	Germany

Technical data

General

Number of levels	1
Number of connections	4
Potentials	1
Nominal cross section	2.5 mm²
Color	green-yellow
Insulating material	PA
Flammability rating according to UL 94	V0
Area of application	Railway industry
	Machine building
	Plant engineering
	Process industry

Ground modular terminal block - PT 2,5-QUATTRO-PE - 3209594

Technical data

General

Rated surge voltage	8 kV
Degree of pollution	3
Overvoltage category	III
Insulating material group	I
Open side panel	Yes
Shock protection test specification	DIN EN 50274 (VDE 0660-514):2002-11
Back of the hand protection	guaranteed
Finger protection	guaranteed
Oscillation, broadband noise test result	Test passed
Test specification, oscillation, broadband noise	DIN EN 50155 (VDE 0115-200):2008-03
Test spectrum	Service life test category 2, bogie mounted
Test frequency	f_1 = 5 Hz to f_2 = 250 Hz
ASD level	6.12 $(m/s^2)^2/Hz$
Acceleration	3.12 g
Test duration per axis	5 h
Test directions	X-, Y- and Z-axis
Shock test result	Test passed
Test specification, shock test	DIN EN 50155 (VDE 0115-200):2008-03
Shock form	Half-sine
Acceleration	30g
Shock duration	18 ms
Number of shocks per direction	3
Test directions	X-, Y- and Z-axis (pos. and neg.)
Relative insulation material temperature index (Elec., UL 746 B)	130 °C
Temperature index of insulation material (DIN EN 60216-1 (VDE 0304-21))	125 °C
Static insulating material application in cold	-60 °C

Dimensions

Width	5.2 mm
End cover width	2.2 mm
Length	72.2 mm
Height	35.3 mm
Height NS 35/7,5	36.8 mm
Height NS 35/15	44.3 mm

Connection data

Note	Please observe the current carrying capacity of the DIN rails.
Connection method	Push-in connection
Connection in acc. with standard	IEC 60947-7-2
Conductor cross section solid min.	0.14 mm²
Conductor cross section solid max.	4 mm²

Ground modular terminal block - PT 2,5-QUATTRO-PE - 3209594

Technical data

Connection data

Conductor cross section AWG min.	26
Conductor cross section AWG max.	12
Conductor cross section flexible min.	0.14 mm²
Conductor cross section flexible max.	2.5 mm²
Min. AWG conductor cross section, flexible	26
Max. AWG conductor cross section, flexible	14
Conductor cross section flexible, with ferrule without plastic sleeve min.	0.14 mm²
Conductor cross section flexible, with ferrule without plastic sleeve max.	2.5 mm²
Conductor cross section flexible, with ferrule with plastic sleeve min.	0.14 mm²
Conductor cross section flexible, with ferrule with plastic sleeve max.	2.5 mm²
2 conductors with same cross section, stranded, TWIN ferrules with plastic sleeve, max.	0.5 mm²
Conductor cross section AWG min.	26
Conductor cross section AWG max.	12
Stripping length	8 mm ... 10 mm
Internal cylindrical gage	A3

Standards and Regulations

Connection in acc. with standard	CSA
	IEC 60947-7-2
Flammability rating according to UL 94	V0

Classifications

eCl@ss

eCl@ss 4.0	27141118
eCl@ss 4.1	27141118
eCl@ss 5.0	27141118
eCl@ss 5.1	27141118
eCl@ss 6.0	27141141
eCl@ss 7.0	27141141
eCl@ss 8.0	27141141
eCl@ss 9.0	27141141

ETIM

ETIM 2.0	EC000901
ETIM 3.0	EC000901
ETIM 4.0	EC000901
ETIM 5.0	EC000901

UNSPSC

UNSPSC 6.01	30211811

Ground modular terminal block - PT 2,5-QUATTRO-PE - 3209594

Classifications

UNSPSC

UNSPSC 7.0901	39121410
UNSPSC 11	39121410
UNSPSC 12.01	39121410
UNSPSC 13.2	39121410

Approvals

Approvals

Approvals

CSA / UL Recognized / cUL Recognized / RS / ABS / NK / BV / VDE Zeichengenehmigung / IECEE CB Scheme / EAC / NK / EAC / DNV GL / cULus Recognized

Ex Approvals

ATEX / IECEx / EAC Ex

Approvals submitted

Approval details

CSA

mm²/AWG/kcmil	26-12

UL Recognized

	B	C
mm²/AWG/kcmil	26-12	26-12

cUL Recognized

	B	C
mm²/AWG/kcmil	26-12	26-12

RS

Ground modular terminal block - PT 2,5-QUATTRO-PE - 3209594

Approvals

ABS

NK

BV

VDE Zeichengenehmigung

mm²/AWG/kcmil	0.2-2.5

IECEE CB Scheme

mm²/AWG/kcmil	2.5

EAC

NK

EAC

DNV GL

cULus Recognized

Phoenix Contact 2016 © - all rights reserved
http://www.phoenixcontact.com

End cover - D-ST 2,5-QUATTRO - 3030514

Please be informed that the data shown in this PDF Document is generated from our Online Catalog. Please find the complete data in the user's documentation. Our General Terms of Use for Downloads are valid (http://phoenixcontact.com/download)

End cover, Length: 72 mm, Width: 2.2 mm, Height: 36.5 mm, Color: gray

RoHS

Key Commercial Data

Packing unit	1 STK
GTIN	4 017918 187972
GTIN	4017918187972
Weight per Piece (excluding packing)	2.800 g
Custom tariff number	85389060
Country of origin	Germany

Technical data

Environmental Product Compliance

China RoHS	No hazardous substances above threshold values

General

Color	gray
Material	PA
Flammability rating according to UL 94	V0

Dimensions

Width	2.2 mm
Length	72 mm
Height	36.5 mm

General

Relative insulation material temperature index (Elec., UL 746 B)	130 °C
Temperature index of insulation material (DIN EN 60216-1 (VDE 0304-21))	125 °C
Static insulating material application in cold	-60 °C

End cover - D-ST 2,5-QUATTRO - 3030514

Technical data

General

Behavior in fire for rail vehicles (DIN 5510-2)	Test passed
Flame test method (DIN EN 60695-11-10)	V0
Oxygen index (DIN EN ISO 4589-2)	>32 %
NF F16-101, NF F10-102 Class I	2
NF F16-101, NF F10-102 Class F	2
Surface flammability NFPA 130 (ASTM E 162)	passed
Specific optical density of smoke NFPA 130 (ASTM E 662)	passed
Smoke gas toxicity NFPA 130 (SMP 800C)	passed
Calorimetric heat release NFPA 130 (ASTM E 1354)	27,5 MJ/kg
Fire protection for rail vehicles (DIN EN 45545-2) R22	HL 1 - HL 3
Fire protection for rail vehicles (DIN EN 45545-2) R23	HL 1 - HL 3
Fire protection for rail vehicles (DIN EN 45545-2) R24	HL 1 - HL 3
Fire protection for rail vehicles (DIN EN 45545-2) R26	HL 1 - HL 3

Standards and Regulations

Flammability rating according to UL 94	V0

Classifications

eCl@ss

eCl@ss 4.0	27141111
eCl@ss 4.1	27141111
eCl@ss 5.0	27141133
eCl@ss 5.1	27141133
eCl@ss 6.0	27141133
eCl@ss 7.0	27141133
eCl@ss 8.0	27141133
eCl@ss 9.0	27141133

ETIM

ETIM 2.0	EC000886
ETIM 3.0	EC000886
ETIM 4.0	EC000886
ETIM 5.0	EC000886

UNSPSC

UNSPSC 6.01	30211827
UNSPSC 7.0901	39121424
UNSPSC 11	39121424
UNSPSC 12.01	39121424
UNSPSC 13.2	39121424

PTTB 2,5

Order No.: 3210567

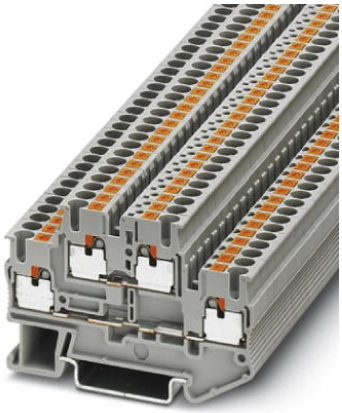

http://catalog.phoenixcontact.net/phoenix/treeViewClick.do?UID=3210567

Double-level terminal block, Cross section: 0.14 mm² - 4 mm², AWG: 26 - 12, Connection type: Push-in connection, Width: 5.2 mm, Color: gray, Mounting type: NS 35/7.5, NS 35/15

Commercial data

EAN	4 046356 418980
sales group	A632
Pack	50 Pcs.
Customs tariff	85369010
Gross weight in pieces	0.012897 KG
Net weight per piece	0.012786 KG
Catalog page information	Page 99 (CL1-2011)

Product notes

WEEE/RoHS-compliant since: 06/16/2008

http://www.download.phoenixcontact.com
Please note that the data given here has been taken from the online catalog. For comprehensive information and data, please refer to the user documentation. The General Terms and Conditions of Use apply to Internet downloads.

Technical data

General

Number of levels	2
Number of connections	4
Color	gray
Insulating material	PA
Inflammability class according to UL 94	V0

Dimensions	
Width	5.2 mm
Length	68 mm
Height NS 35/7,5	47.5 mm
Height NS 35/15	55 mm

Technical data	
Rated surge voltage	6 kV
Pollution degree	3
Surge voltage category	III
Insulating material group	I
Connection in acc. with standard	IEC 60947-7-1
Nominal current I_N	22 A
Nominal voltage U_N	500 V
Open side panel	ja
Shock protection test specification	DIN EN 50274 (VDE 0660-514):2002-11
Back of the hand protection	guaranteed
Finger protection	guaranteed
Surge voltage test setpoint	7.3 kV
Result of surge voltage test	Test passed
Power frequency withstand voltage setpoint	1.89 kV
Result of power-frequency withstand voltage test	Test passed
Checking the mechanical stability of terminal points (5 x conductor connection)	Test passed
Bending test rotation speed	10 rpm
Bending test turns	135
Bending test conductor cross section/weight	0.14 mm² / 0.2 kg
	2.5 mm² / 0.7 kg
	4 mm² / 0.9 kg
Result of bending test	Test passed
Conductor cross section tensile test	0.14 mm²
Tractive force setpoint	10 N
Conductor cross section tensile test	2.5 mm²
Tractive force setpoint	50 N
Conductor cross section tensile test	4 mm²
Tractive force setpoint	60 N

Tensile test result	Test passed
Tight fit on carrier	NS 35
Setpoint	1 N
Result of tight fit test	Test passed
Requirements, voltage drop	≤ 3.2 mV
Result of voltage drop test	Test passed
Temperature-rise test	Test passed
Conductor cross section short circuit testing	2.5 mm²
Short-time current	0.3 kA
Conductor cross section short circuit testing	4 mm²
Short-time current	0.48 kA
Short circuit stability result	Test passed
Ageing test for screwless modular terminal block temperature cycles	192
Result of aging test	Test passed
Proof of thermal characteristics (needle flame) effective duration	30 s
Result of thermal test	Test passed
Test specification, oscillation, broadband noise	DIN EN 50155 (VDE 0115-200):2008-03
Test spectrum	Service life test category 1, class B, on vehicle body
Test frequency	f_1 = 5 Hz to f_2 = 150 Hz
ASD level	0.02 g²/Hz
Acceleration	0.8 g
Test duration per axis	5 h
Test directions	X-, Y- and Z-axis
Oscillation, broadband noise test result	Test passed
Test specification, shock test	DIN EN 50155 (VDE 0115-200):2008-03
Shock form	Half-sine
Acceleration	5 g
Shock duration	30 ms
Number of shocks per direction	3
Test directions	X-, Y- and Z-axis (pos. and neg.)
Shock test result	Test passed
Temperature index, insulating material (DIN EN 60216-1 (VDE 0304-21))	130 °C

Connection data

Conductor cross section solid min.	0.14 mm²
Conductor cross section solid max.	4 mm²
Conductor cross section stranded min.	0.14 mm²
Conductor cross section stranded max.	2.5 mm²
Conductor cross section AWG/kcmil min.	26
Conductor cross section AWG/kcmil max	12
Conductor cross section stranded, with ferrule without plastic sleeve min.	0.14 mm²
Conductor cross section stranded, with ferrule without plastic sleeve max.	2.5 mm²
Conductor cross section stranded, with ferrule with plastic sleeve min.	0.14 mm²
Conductor cross section stranded, with ferrule with plastic sleeve max.	2.5 mm²
2 conductors with same cross section, stranded, TWIN ferrules with plastic sleeve, max.	0.5 mm²
Connection method	Push-in connection
Stripping length	10 mm
Internal cylindrical gage	A3

Certificates / Approvals

Certification	CSA, cULus Recognized, GOST, VDE Zeichengenehmigung, ABS, BV, GL, LR, NK, RS, IECEE CB Scheme
Certification Ex:	ATEX, IECEx
Certifications applied for:	

Accessories

Item	Designation	Description
Assembly		
3030747	ATP-STTB 4	Partition plate, Length: 88.7 mm, Width: 2 mm, Height: 53 mm, Color: gray

3022218	CLIPFIX 35	Snap-on end bracket, for 35 mm NS 35/7.5 or NS 35/15 DIN rail, can be fitted with Zack strip ZB 8 and ZB 8/27, terminal strip marker KLM 2 and KLM, width: 9.5 mm, color: gray
3022276	CLIPFIX 35-5	Quick mounting end clamp for NS 35/7,5 DIN rail or NS 35/15 DIN rail, can be fitted with ZB 5 and ZBF 5 zack marker strip, KLM 2, KLM3, and KML3L terminal strip marker, parking option for FBS...5, FBS...6, KSS 5, KSS 6, width: 5.15 mm, color: gray
0801704	NS 35/ 7,5 AL UNPERF 2000MM	DIN rail, material: Aluminum, unperforated, height 7.5 mm, width 35 mm, length: 2 m
1206560	NS 35/ 7,5 CAP	DIN rail end piece, for DIN rail NS 35/7.5
0801762	NS 35/ 7,5 CU UNPERF 2000MM	DIN rail, material: Copper, unperforated, height 7.5 mm, width 35 mm, length: 2 m
0801733	NS 35/ 7,5 PERF 2000MM	DIN rail, material: steel galvanized and passivated with a thick layer, perforated, height 7.5 mm, width 35 mm, length: 2000 mm
0801681	NS 35/ 7,5 UNPERF 2000MM	DIN rail, material: Steel, unperforated, height 7.5 mm, width 35 mm, length: 2 m
1204119	NS 35/ 7,5 WH PERF 2000MM	DIN rail 35 mm (NS 35)
1204122	NS 35/ 7,5 WH UNPERF 2000MM	DIN rail 35 mm (NS 35)
1206421	NS 35/ 7,5 ZN PERF 2000MM	DIN rail, material: Galvanized, perforated, height 7.5 mm, width 35 mm, length: 2 m
1206434	NS 35/ 7,5 ZN UNPERF 2000MM	DIN rail, material: Galvanized, unperforated, height 7.5 mm, width 35 mm, length: 2 m
1201756	NS 35/15 AL UNPERF 2000MM	DIN rail, deep drawn, high profile, unperforated, 1.5 mm thick, material: aluminum, height 15 mm, width 35 mm, length 2000 mm
1206573	NS 35/15 CAP	DIN rail end piece, for DIN rail NS 35/15
1201895	NS 35/15 CU UNPERF 2000MM	DIN rail, material: Copper, unperforated, 1.5 mm thick, height 15 mm, width 35 mm, length: 2 m
1201730	NS 35/15 PERF 2000MM	DIN rail, material: steel galvanized and passivated with a thick layer, perforated, height 15 mm, width 35 mm, length: 2000 mm
1201714	NS 35/15 UNPERF 2000MM	DIN rail, material: Steel, unperforated, height 15 mm, width 35 mm, length: 2 m
0806602	NS 35/15 WH PERF 2000MM	DIN rail 35 mm (NS 35)
1204135	NS 35/15 WH UNPERF 2000MM	DIN rail 35 mm (NS 35)
1206599	NS 35/15 ZN PERF 2000MM	DIN rail, material: Galvanized, perforated, height 15 mm, width 35 mm, length: 2 m
1206586	NS 35/15 ZN UNPERF 2000MM	DIN rail, material: Galvanized, unperforated, height 15 mm, width 35 mm, length: 2 m
1201798	NS 35/15-2,3 UNPERF 2000MM	DIN rail, material: Steel, unperforated, 2.3 mm thick, height 15 mm, width 35 mm, length: 2 m

Bridges

3030161	FBS 2-5	Plug-in bridge, Number of positions: 2, Color: red

3030174	FBS 3-5	Plug-in bridge, Number of positions: 3, Color: red
3030187	FBS 4-5	Plug-in bridge, Number of positions: 4, Color: red
3030190	FBS 5-5	Plug-in bridge, Number of positions: 5, Color: red
3030213	FBS 10-5	Plug-in bridge, Number of positions: 10, Color: red
3030226	FBS 20-5	Plug-in bridge, Number of positions: 20, Color: red
3038930	FBS 50-5	Plug-in bridge, Number of positions: 50, Color: red
Covers		
3211634	D-PTTB 2,5	End cover, Length: 68 mm, Width: 2.2 mm, Color: gray
General		
0800886	E/NS 35 N	End clamp, width: 9.5 mm, color: gray
3032185	FBS-PV	Vertical potential bridge, to connect the upper and lower level
3048564	PS-8/2,3MM RD	Test adapter, Color: red
Marking		
0800967	STP 5-2	Double marker carrier, snaps onto the double-level spring-cage terminal block STTB 2.5 and STTB 4, labeled with ZB 5 or ZBF 5
0800970	STP 5-2/S	Double marker carrier, snaps onto the double-level spring-cage terminal block ZFKK 1,5, with MSTBV or ICV pick-off
0818153	UC-TMF 5	Marker for terminal blocks, Sheet, white, Unlabeled, Can be labeled with: Bluemark, Plotter, BLUEMARK CLED, Mounting type: Snap into flat marker groove, For terminal block width: 5.2 mm, Lettering field: 4.6 x 5.1 mm
0824638	UC-TMF 5 CUS	Marker for terminal blocks, Can be ordered: By sheet, white, Labeled according to customer specifications, Mounting type: Snap into flat marker groove, For terminal block width: 5.2 mm, Lettering field: 4.6 x 5.1 mm
0828744	UCT-TMF 5	Marker for terminal blocks, Sheet, white, Unlabeled, Can be labeled with: Thermomark C+, Thermomark C, Bluemark, BLUEMARK CLED, Mounting type: Snap into flat marker groove, For terminal block width: 5.2 mm, Lettering field: 4.4 x 4.7 mm
0829658	UCT-TMF 5 CUS	Marker for terminal blocks, Can be ordered: By sheet, white, Labeled according to customer specifications, Mounting type: Snap into flat marker groove, For terminal block width: 5.2 mm, Lettering field: 4.4 x 4.7 mm
0825025	ZBF 5 CUS	Zack Marker strip, flat, Can be ordered: Strip, white, Labeled according to customer specifications, Mounting type: Snap into flat marker groove, For terminal block width: 5 mm, Lettering field: 5.15 x 5.15 mm
0808642	ZBF 5:UNBEDRUCKT	Zack Marker strip, flat, Strip, white, Unlabeled, Can be labeled with: Plotter, Mounting type: Snap into flat marker groove, For terminal block width: 5 mm, Lettering field: 5.1 x 5.2 mm

Plug/Adapter

3036725	DP PS-5	Spacer plate, Color: red
3002843	ISH 2,5/0,2	Insulation stop sleeve, Color: white
3002856	ISH 2,5/0,5	Insulation stop sleeve, Color: gray
3002869	ISH 2,5/1,0	Insulation stop sleeve, Color: black
0201731	MPS-IH BK	Insulating sleeve, Color: black
0201689	MPS-IH BU	Insulating sleeve, Color: blue
0201702	MPS-IH GN	Insulating sleeve, Color: green
0201728	MPS-IH GY	Insulating sleeve, Color: gray
0201676	MPS-IH RD	Insulating sleeve, Color: red
0201663	MPS-IH WH	Insulating sleeve, Color: white
0201692	MPS-IH YE	Insulating sleeve, Color: yellow
0201744	MPS-MT	Test plugs
3032871	PAI-4-N GY	Test adapter, Color: gray
3030983	PS-5	Test adapter, Color: red
3038723	PS-5/2,3MM RD	Test plugs, Color: red
3038736	PS-6/2,3MM RD	Test plugs, Color: red

Software

5146040	CLIP-PROJECT ADVANCED	Multilingual software for easy planning of Phoenix Contact on DIN rails together with the integrated TRABTECH-select software module for planning comprehensive surge protection concepts.
5146053	CLIP-PROJECT PROFESSIONAL	Multi-lingual software for terminal strip project planning. A marking module allows professional labeling of markers and labels for marking terminal blocks, conductors, cables and devices. The additionally integrated software module TRABTECH-select for planning comprehensive surge protection concepts.

Tools

1204517	SZF 1-0,6X3,5	Actuation tool, for ST terminal blocks, also suitable for use as a bladed screwdriver, size: 0.6 x 3.5 x 100 mm, 2-component grip, with non-slip grip

Drawings

Circuit diagram

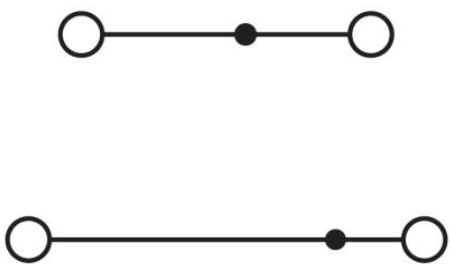

Extract from the online catalog

D-PTTB 2,5

Order No.: 3211634

http://catalog.phoenixcontact.net/phoenix/treeViewClick.do?UID=3211634

End cover, Length: 68 mm, Width: 2.2 mm, Color: gray

Commercial data	
EAN	4 046356 428378
sales group	A692
Pack	50 Pcs.
Customs tariff	85389099
Gross weight in pieces	0.00326 KG
Net weight per piece	0.00326 KG
Catalog page information	Page 99 (CL1-2011)

Product notes

WEEE/RoHS-compliant since: 06/23/2008

http://www.download.phoenixcontact.com
Please note that the data given here has been taken from the online catalog. For comprehensive information and data, please refer to the user documentation. The General Terms and Conditions of Use apply to Internet downloads.

Certificates / Approvals

Certification GOST

Certifications applied for:

Certification Ex:

Extract from the online catalog

FBS 2-5

Order No.: 3030161

http://catalog.phoenixcontact.net/phoenix/treeViewClick.do?UID=3030161

Plug-in bridge, Number of positions: 2, Color: red

Commercial data	
EAN	4 017918 188511
sales group	A690
Pack	50 Pcs.
Customs tariff	85389099
Gross weight in pieces	0.001696 KG
Net weight per piece	0.001684 KG
Catalog page information	Page 390 (CL1-2011)

Product notes

WEEE/RoHS-compliant since: 01/01/2003

http://www.download.phoenixcontact.com
Please note that the data given here has been taken from the online catalog. For comprehensive information and data, please refer to the user documentation. The General Terms and Conditions of Use apply to Internet downloads.

Certificates / Approvals

Certification

Certifications applied for:

Certification Ex:

End clamp - CLIPFIX 35-5 - 3022276

Please be informed that the data shown in this PDF Document is generated from our Online Catalog. Please find the complete data in the user's documentation. Our General Terms of Use for Downloads are valid (http://phoenixcontact.com/download)

Quick mounting end clamp for NS 35/7,5 DIN rail or NS 35/15 DIN rail, with marking option, with parking option for FBS...5, FBS...6, KSS 5, KSS 6, width: 5.15 mm, color: gray

Why buy this product

- Phoenix Contact has engineered its CLIPFIX end brackets to maintain a secure grip on the various DIN rail systems
- Design width of just 5.2 mm
- Parking option for bridges and plugs
- Large-surface labeling

Key Commercial Data

Packing unit	50 STK
Minimum order quantity	50 STK
GTIN	4 017918 194154
Weight per Piece (excluding packing)	5.13 g
Custom tariff number	39269099
Country of origin	Germany

Technical data

Dimensions

Height	35 mm
Length	48.5 mm
Width	5.15 mm

General

Material	PA
Color	gray

Standards and Regulations

Flammability rating according to UL 94	V2

End clamp - CLIPFIX 35-5 - 3022276

Classifications

eCl@ss

eCl@ss 4.0	27141199
eCl@ss 4.1	27141199
eCl@ss 5.0	27141135
eCl@ss 5.1	27141135
eCl@ss 6.0	27141135
eCl@ss 7.0	27141135
eCl@ss 8.0	27141135
eCl@ss 9.0	27141135

ETIM

ETIM 2.0	EC000761
ETIM 3.0	EC001041
ETIM 4.0	EC001041
ETIM 5.0	EC001041

UNSPSC

UNSPSC 6.01	30212109
UNSPSC 7.0901	39121708
UNSPSC 11	39121708
UNSPSC 12.01	39121708
UNSPSC 13.2	39121708

Phoenix Contact 2016 © - all rights reserved
http://www.phoenixcontact.com

Extract from the online catalog

NS 35/ 7,5 PERF 2000MM

Order No.: 0801733

http://eshop.phoenixcontact.ca/phoenix/treeViewClick.do?UID=0801733

DIN rail, material: steel galvanized and passivated with a thick layer, perforated, height 7.5 mm, width 35 mm, length: 2000 mm

Commercial data	
EAN	4 017918 006686
Pack	2 m
Customs tariff	72287010
Catalog page information	Page 341 (CL2-2011)

Product notes

WEEE/RoHS-compliant since: Jan/13/2006

Please note that the data given here has been taken from the online catalog. For comprehensive information and data, please refer to the user documentation at http://www.download.phoenixcontact.com. The General Terms and Conditions of Use apply to Internet downloads.

Technical data

General data

Height	7.5 mm
Length	2000 mm
Width	35 mm
Material	Steel
Coating	Galvanized, passivated with a thick layer
Color	silver
Test standard	In acc. with EN 60715: 2001

NS 35/ 7,5 PERF 2000MM Order No.: 0801733
http://eshop.phoenixcontact.ca/phoenix/treeViewClick.do?UID=0801733

Drawings

Dimensioned drawing

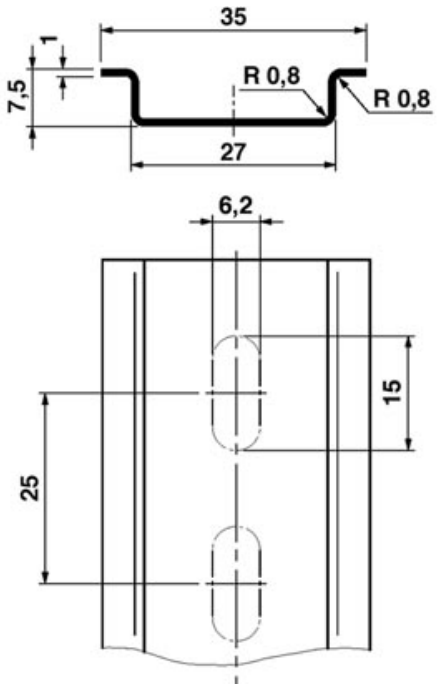

STEP POWER

STEP POWER - Power supply units for distributor boards and flat control panels

– Energy savings thanks to maximum energy efficiency and incredibly low no-load losses
– Flexible assembly by simply snapping the product onto the DIN rail or screwing it onto an even surface
– Reliable power supply thanks to the high MTBF (mean time between failures) of more than 500,000 hours and the UI characteristic curve
– Approved for DeviceNet: 24 V DC, 100 W (NEC Class 2)

STEP POWER, 100 W

– Output power limited to 100 W: Specifically for applications that require certification according to UL 1310/508 listed Class 2

Power supply, 1 AC, 24 V DC, 1.75 A

Ex:

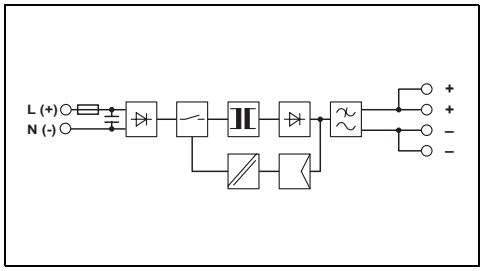

Technical data

Input data	
Nominal input voltage range	100 V AC ... 240 V AC
Input voltage range AC/DC	85 V AC ... 264 V AC / 95 V DC ... 250 V DC
Frequency range	45 Hz ... 65 Hz / 0 Hz
Current consumption (nominal load)	Approx. 0.6 A (120 V AC) / Approx. 0.3 A (230 V AC)
Inrush current limitation at 25°C (typ.) / I^2t	< 15 A / < 0.6 A^2s
Mains buffering (I_N, typ.)	> 25 ms (120 V AC) / > 150 ms (230 V AC)
Input fuse	3.15 A (slow-blow, internal)
Recommended backup fuse, LS switch	B6, B10, B16
Output data	
Nominal output voltage	24 V DC ±1%
Setting range of the output voltage	22.5 V DC ... 29.5 V DC (> 24 V constant capacitance)
Output current	1.75 A
Can be connected in parallel / series	Yes / Yes
Max. power dissipation (idling/nominal load)	< 0.7 W / 5 W
Efficiency (typ.)	> 89% (for 230 V AC and nominal values)
Residual ripple	< 60 mV_{PP}
Signaling	
Signaling DC OK	LED
General data	
Weight / Dimensions W x H x D	0.2 kg / 54 x 90 x 61 mm
Installation position	horizontal DIN rail NS 35, EN 60715
Spacing when mounting	Can be aligned: horizontal 0 cm, vertical 3 cm
Connection method	Screw connection
Input connection data solid / stranded / AWG	0.2 - 2.5 mm^2 / 0.2 - 2.5 mm^2 / 24 - 12
Output connection data solid / stranded / AWG	0.2 - 2.5 mm^2 / 0.2 - 2.5 mm^2 / 24 - 12
Degree of protection / Protection class	IP20 / II
MTBF (at nominal load, 40°C)	> 500,000 h
Ambient temperature (operation)	-25°C ... 70°C (> 55°C derating)
Standards / regulations	
Insulation voltage input/output	2 kV AC (routine test) / 4 kV AC (type test)
Electromagnetic compatibility	Conformance with EMC Directive 2004/108/EC
Electrical safety, safety transformer	IEC 60950-1/VDE 0805 (SELV), IEC 61558-2-17
Electronic equipm. for electrical power installations	EN 50178/VDE 0160 (PELV)
Safe isolation	DIN VDE 0100-410, DIN VDE 0106-1010
UL approvals	UL/C-UL listed UL 508, UL/C-UL recognized UL 60950, NEC Class 2 as per UL 1310, UL/C-UL listed ANSI/ISA-12.12.01 Class I, Division 2, Groups A, B, C, D
Limitation of harmonic line currents	EN 61000-3-2

Ordering data

Description	Type	Order No.	Pcs. / Pkt.
Power supply unit, primary-switched	**STEP-PS/ 1AC/24DC/1.75**	**2868648**	1

Series DC
For Remote Applications

Series DC controls are designed for applications where only direct current power is available. DC units can be used as differential level controls or single point alarm contactors. Because of solid state reliability, plug-in convenience, and choice of 12 or 24 VDC supply voltage, Warrick DC controls can be used with confidence in many applications.

Contact Design	SPDT 1 N.O. & 1 N.C. (1 form C), non-powered contacts
Contact Rating	5 amp @ 30 VDC or 120 VAC Resistive 1/8 hp
Mode of Operation	Direct/Inverse, factory set
Sensitivity	0 - 1M ohm maximum, factory set
Primary Voltage	12 VDC, 24 VDC, negative ground (±20%)
Supply Current	40 mA when relay energized, 10 mA w/relay de-energized
Secondary Voltage	12 VDC
Terminal Style	Screw connector
Temperature	-50°F to +150°F (-46°C to +65°C)
Options	Time Delay

Series DC

Applications

- Single and Differential Service
- Solar and Wind Powered Pumps
- Portable Cleaning Equipment
- Battery-Powered Level Control
- Well Pumps
- Remote Reservoirs
- Remote Irrigation
- Onboard Ship Level Control

How to Order

Use the **Bold** characters from the chart below to construct a product code.

DC X X X X XX XX

Series
DC

Supply Voltage
1 – 12 VDC **2** – 24 VDC

Sensitivity
B – 22K **D** – 470K
C – 100K **E** – 1M

Mode of Operation
D – Direct **I** – Inverse

Enclosure
0 – None **1** – NEMA 1 **4** – NEMA 4

Time Delay (increasing level) **01-30** sec.

Time Delay (decreasing level) **01-30** sec.

Dimensions

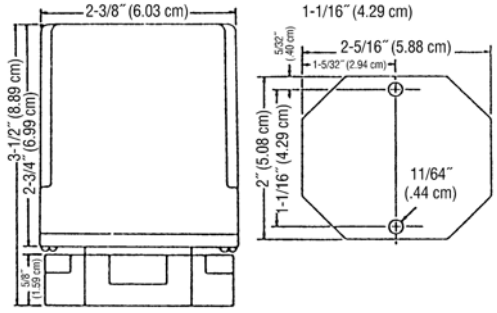

Wiring

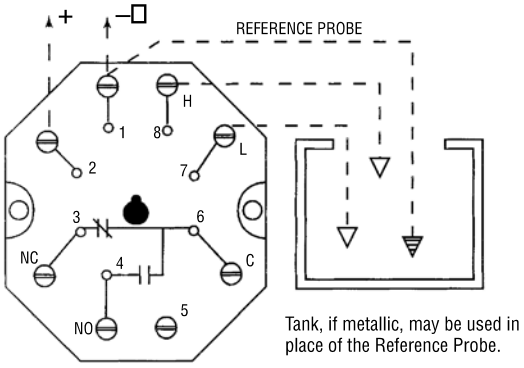

Tank, if metallic, may be used in place of the Reference Probe.

WARRICK CONDUCTIVITY SENSORS

Warrick® Sensor Fittings and Probes

Warrick Liquid Level Sensors are available in single- and multi-probe models and with a variety of fittings. The versatility of the Warrick design makes these sensors ideal for a diverse range of applications.

Examples include:

- Food and Beverage
- Caustics and Acids
- Sumps
- Reservoirs
- Pharmaceuticals
- Boilers and Steam Generators
- Ponds
- Sewage and Wastewater

Probe Styles

- Metal Rods
- Wire Suspended
- Corrosion Resistant
- Sanitary

Fitting Styles

- 3/8˝ to 3˝ Threaded Mount
- Bracket Mount
- Flange Mount
- External Mount
- Sanitary Mount
- Condulet Mount

Sensor Selection Chart

SERIES		3E	3N	3F	3G	3C	3K	3J	3L	3M	3MT	3S	3R	3T	3B	3H	3W	3Y
Page Number		E-20	E-20	E-19	E-19	E-23	E-23	E-18	E-18	E-25	E-25	E-24	E-21	E-21	E-20	E-18	E-22	E-22
Body Options	Flange			•	•													
	Pipe Thread	•			•			•										
	Flat Mount		•		•													
	Side Chamber					•	•											
	Non-Contact Electrodes											•						
	Food Grade Connection									•	•							
	Bracket Mount											•						
Fitting Body Material Options	Brass	•	•	•		•		•										
	PVC		•	•	•													
	1018 Carbon Steel			•														
	Stainless Steel	•		•														
	Forged Steel			•														
	Nylon									•	•							
	Cast Iron	•				•	•	•				•						
Housing Material	Coated Aluminum	•	•	•		•	•	•				•						
	Polycarbonate				•													
Number of Probes	1 to 3		•					•										
	1 to 4					•	•			•	•							
	1 to 7	•		•	•							•						
Electrodes	Electrode Only								•				•	•	•	•	•	•

CONTROLS PHILOSOPHY

SECTION CONTENTS

CP810206 - Rev 1.1

TROJAN UV

Water Confidence™

UVSIGNA CONTROLS PHILOSOPHY – El Centro, CA

Project # 810206
Build Sheet Rev. C

Table of Contents

1. GENERAL 2
1.01 Acronyms and Abbreviations 2
1.02 Controller I/O Layout 2
1.03 Site Specific Configurations 3
1.04 Custom (Site Specific) Programming 3
1.05 Safety Features 3
2. Control System Overview 4
2.01 System Control Center (SCC) 4
2.02 Power Distribution Center (PDC) 4
2.03 Hydraulic System Center (HSC) 5
2.04 System Fault Conditions 5
2.05 Security 9
3. Bank Control 9
3.01 Control Architecture 9
3.02 Bank Control Mode Selection 10
3.03 Bank Control Mode Operation 10
3.04 Bank Fault System Control Behavior 11
4. Hydraulic Control 11
4.01 Control Architecture 11
4.02 HSC Lift Control 11
4.03 Wiping Control Modes 12
4.04 Hydraulic System Fault System Control Behavior 13
5. Flow Input 14
5.01 Flow Measurement Modes 14
5.02 Flow Fault System Control Behavior 14
6. UVT Input Signal 14
6.01 UVT Measurement Modes 14
6.02 UVT Fault System Control Behavior 14
7. Intensity Input Signal 15
7.01 Intensity Measurement Modes 15
7.02 Intensity Fault System Behavior 15
8. Auto Pacing 15
8.01 Equipment Pacing (SCC Controller) 15
8.02 Dose Pacing 18
8.03 Auto Pacing Fault System Control Behavior 18
9. Power Failure detection 18
9.01 Power Failure at SCC 18
9.02 Power Failure Detected by BCB 19
9.03 Power Failure Fault System Control Behavior 19
10. System Trending 19
11. Plant SCADA interface 20
11.01 Plant SCADA Interface Architecture 20
11.02 Plant SCADA Addressing Summary 20
11.03 Plant SCADA Interface Read Data 20
11.04 SCADA Interface Write Data 22
11.05 SCADA Fault Conditions 22

Confidential - Company Proprietary

1. GENERAL

The objective of this document is to provide details regarding the control strategy for the Trojan UVSigna™ disinfection system. The controls philosophy outlines the major hardware components, system status, alarm conditions and the modes of operation of the UV system.

1.01 Acronyms and Abbreviations

BCB	Bank Control Board
HSC	Hydraulic System Center
PDC	Power Distribution Center
RED	Reduction Equivalent Dose
SBC	Sensor Based Control
SBR	Sequencing Batch Reactor
SCADA	Supervisory Control And Data Acquisition
SCC	System Control Center
UV	Ultraviolet
UVT	Ultraviolet Transmittance
UVI	Ultraviolet Intensity

1.02 Controller I/O Layout

The following is the list of controller hardware included in the SCC.

Type	Details
Operator Interface	Allen Bradley PanelView Plus 7 Performance 10”
Controller Processor	Allen Bradley CompactLogix 1769-L33ER
Board Communication	ProSoft MVI69E-MBS
Analog Input Card	Allen Bradley 1769-IF4
Discrete Output Card	Allen Bradley 1769-OB16
Discrete Input Card	Allen Bradley 1769-IQ16
Communication	Allen Bradley CompactLogix 1769-L33ER

ProSoft Modbus Communications

Port No.	Function	Devices	Addresses
1	Channel 1 PDC Communication Channel 1 HSC Communication	Bank 1A, Bank 1B, Bank 1C, HSC 1A	11, 12, 13, 10
2	Channel 2 PDC Communication Channel 2 HSC Communication	Bank 2A, Bank 2B, Bank 2C, HSC 2A	21, 22, 23, 10

Analog Input Card

- Flow Signal

Discrete Output Card

- No Common Minor Alarm
- No Common Major Alarm
- No Common Critical Alarm

Discrete Input Card

- SCC on Battery Power
- UPS Device OK

Confidential - Company Proprietary

1.03 Site Specific Configurations

The following parameters were used to configure the UV system and are specific to the site.

Item	Configuration	Description
Number of Channels	2	
Number of Banks per Channel	3	
Number of Rows per Bank	2	
Number of Lamps per Bank	8	
Number of HSCs per Channel	1	
High Water Level Sensing	No	
Low Water Level Sensing	Yes	1/Channel
Analog Water Level Sensing	No	
UV Intensity Measurement	Yes	1/Bank
UVT Measurement	Manual	
Flow Measurement	Analog	
SCADA	Ethernet	
UPS	Yes	
Inlet Gate Present	No	
Outlet Gate Present	No	
System Peak Flow	16.0 MGD	
Peak Flow Per Channel	8.0 MGD	
Validation Report	2 Row High UVT IUVA Carollo MS2T1 V1.0	
Microbe Sensitivity	MS2	
D10	20.0	
Design Target RED	30 mJ/cm²	
Design UVT	62%	
EOLL Hours	15000	
Fouling Factor	0.94	

1.04 Custom (Site Specific) Programming

- Not applicable for this project.

1.05 Safety Features

The UVSigna control strategy employs equipment protection measures as well as monitoring of a number of alarm conditions that will result in control action designed to maintain the delivered RED.

The first critical interlock condition that will disable a bank of UV lamps is a “Bank Not in Place” alarm. The alarm input is wired directly to the contactor of the respective bank; the BCB will also override all lamps under its control to an off state immediately. This alarm will also disable the automatic wiping functionality of the affected bank.

The second critical condition that will disable a bank of UV lamps is a PDC “Panel High Temperature” alarm. This alarm input is wired directly to the BCB of the respective bank (one BCB per bank); the BCB will override all lamps under its control to an off state immediately.

The third critical condition that will disable a bank(s) of UV lamps is a “Low Water Level” alarm. Each channel is equipped with a separate channel low water level sensor. The signal from this sensor is connected to the BCB “Low Water Level” discrete input of each bank in the channel as a “Bank Low Water Level” for local protection of the bank.

Certain other alarm conditions will trigger a control action that may result in a bank being shut down and another bank coming on in its place, or will result in all banks running at full power. These alarm conditions are more fully described later in this document.

2. CONTROL SYSTEM OVERVIEW

2.01 System Control Center (SCC)

SCC provides the following functionality:

- System Setup
- Control and Monitoring of:
  - System
  - Channels
  - Banks
  - Lamp Drivers
  - Lamps
  - HSC/Wiper Groups
- Alarming
- Trending and Data Logging
- Process Parameter Measurement:
  - Flow
  - UV Transmittance (UVT)
  - Channel Water Level
- Equipment Pacing
- SCADA Communication

The SCC communicates to the BCB(s) and HSC(s) through one or more Modbus RS-485 networks, dependent on the site configuration.

2.01.1 Controller Fault System Control Behavior

A Controller fault is major in nature and no control action can be taken. Refer to Section 2.04 *System Fault Conditions* for more information.

2.02 Power Distribution Center (PDC)

The Power Distribution Center (PDC) houses the components used to control bank(s). The controller for each bank is Trojan’s Bank Control Board (BCB). The BCB performs the following functions:

- Lamp Driver power control
- Bank operating mode: “Local On” / “Local Off” / “Remote”
- Bank Hours/Cycle management
- UV Intensity (UVI) measurement
- Dose pacing
- Monitor and response to critical system interlocks
- PDC protection

Confidential - Company Proprietary

The PDC also houses the Lamp Drivers for the banks under its control, and the electrical power distribution network used to route power to each Lamp Driver. The BCB(s) communicates with the Lamp Drivers through a Modbus RS-485 network and the SCC through a separate Modbus RS-485 network.

2.03 Hydraulic System Center (HSC)

The controller of the HSC controls the hydraulic operations for up to four (4) banks in the system; the banks controlled by the same HSC must be in the same channel. The hydraulic operations for each bank include the wiping control of one wiper group per bank, and the bank lifting control. The HSC performs the following functions:

- Automatic wiping controls
- Manual wiping operations
- Hydraulic parameter measurements
- Hydraulic pump protection
- UV bank lift operation (raising and lowering of bank)

The HSC(s) communicates with the SCC through a Modbus RS-485 network.

2.04 System Fault Conditions

The UV system is subject to a number of fault conditions, which may be a minor, major or critical in nature. All alarms are subject to a minor, major, critical or individually configured alarm delay timers. The following table describes and depicts alarm structure.

Critical Alarms:	Indicates that immediate attention is required. The UV system will partially or completely shut down until the fault is cleared. Alarms may be latched and require a reset from the Operator Interface after the alarm condition is remedied.		
System Level	**Alarm Name**	**Description**	**Controls Action In Remote Auto**
System	SCC Run On UPS	The SCC is running on UPS power after a SCC power loss.	No control action taken.
Bank	PDC High Temperature Shutdown	The PDC temperature has increased beyond the high limit. (Latched)	BCB will turn off the lamp drivers, bank flagged as unhealthy. Another bank will be brought online if possible.
	PDC Bank Disconnect Off	The disconnect switch for a given bank is in an “Open” state	BCB will turn off the lamp drivers, bank flagged as unhealthy. Another bank will be brought online if possible.
	Bank Not In Place	The “Bank Not In Place” proximity sensor indicates that the bank is not in place in the channel. (Latched)	BCB will turn off the lamp drivers, bank flagged as unhealthy. Another bank will be brought online if possible.
	Bank Low Water Level Shutdown	With flow present, channel water level is below the low mechanical setpoint after the low water alarm time has expired.	BCB will turn off the lamp drivers, bank flagged as unhealthy. Another bank will be brought online if possible.

Confidential - Company Proprietary

Major Alarms:	Indicates that immediate attention is required, otherwise damage may occur or disinfection performance may be compromised. The UV system does not shutdown; however, control actions may be taken to achieve disinfection.

System Level	Alarm Name	Description	Controls Action In Remote Auto
System	Low UV Dose	Calculated RED is below the System RED setpoint.	Open all channels and run all available banks at full power
	Not Enough Healthy Channels (latched)	System requires more channels for disinfection than are available	Open all channels and run all available banks at full power
	Low UVT – Out of Validation Range	UVT is below Low UVT Validation Range setpoint.	Open all channels and run all available banks at full power
	Flow Meter Fault	The 4-20mA Flow signal input is below 2mA or above 20.5mA	Use “Default” Flow and run the system at full capacity for disinfection.
	High Flow – Out of Validation Range	Flow is above High Flow Validation Range setpoint.	Open all channels and run all available banks at full power.
	Low Flow	Flow is below preset setpoint.	All banks will time-off if minimum number of banks configured as “0” and minimum number of channels configured as “0” or “1”.
	Controller Fault	Controller/module fault exists.	Controller faults out. No action can be taken.
HSC	SCC-HSC Communication Fault	The HSC is not responding to polling from SCC.	Remote wiping disabled for this HSC.
	HSC Hydraulic Tank Low Level	Hydraulic tank low level pressure signal is detected.	HSC turns hydraulic pump off immediately. Wipers and lifting are disabled for this HSC.
	HSC Pump Fault	The hydraulic pump fails to turn on/off when requested. (Latched)	HSC turns hydraulic pump off immediately. Wipers and lifting are disabled for this HSC until condition reset at HSC.
Channel	Not Enough Healthy Banks Available	There are not enough banks available to meet the RED setpoint.	Banks in the channel are run at 100% power until another healthy channel can be brought online (if available) or the fault is cleared.
Bank	SCC-PDC Communication Fault	The BCB is not responding to polling from the SCC.	Bank is flagged as unhealthy. The bank is run at full power by BCB if option selected at Operator Interface.
	Multiple Lamp Failure	Number of failed lamps has reached or exceeded Multiple Lamp Failure Setpoint. (Latched)	Bank is flagged as unhealthy. Another bank will be brought online if possible.
	BCB Dipswitch Mismatch	The Dipswitch configuration on the BCB does not match the expected configuration.	Bank is flagged as unhealthy. Another bank will be brought online if possible.
	Bank Configuration Mismatch	The bank configuration in the System Settings does not match the actual configuration of the bank at the BCB.	Bank is flagged as unhealthy. Another bank will be brought online if possible.
	Not Enough Healthy Lamps	There are no lamps in the bank available to operate.	BCB will turn off the lamp drivers, bank is flagged as unhealthy. Another bank will be brought online if possible.
	UVI Sensor Fault - SBC	The 4-20mA signal from the bank UVI sensor is below 2mA or above 20.5mA. Only applies if the operator configurable “Use Theoretical” setting is Never.	No control action taken.

Confidential - Company Proprietary

System Level	Alarm Name	Description	Controls Action In Remote Auto
	UVI Sensor Lower Than Expected – SBC - Latched	The UVI sensor is reading lower than the theoretical limit value.	Bank is flagged as unhealthy. Another bank will be brought online if possible.
	Wiper Group Jammed	Wiper hits high pressure within “Minimum Wiper Travel Time” when this wiper is moving. (Latched).	The affected wiper group is disabled until condition reset at HSC.
	Wiper Travel Time Exceeded	The wiper has exceeded the maximum travel time while retracting or extending. (Latched)	The affected wiper group is disabled until condition reset at HSC.

Minor Alarms:	Indicates that the UV system requires maintenance but it is operating in compliance. Alarms are not latched and no reset is required. No other actions will be taken.		
System Level	**Alarm Name**	**Description**	**Controls Action In Remote Auto**
System	Controller Battery Low	The battery in the controller is low and will not be able to maintain the program in the event of a power failure.	No control action taken.
	System Power On Reset	System has experienced a power on reset condition.	Maintain normal operation as it was prior to power outage.
	SCC Power Restored	SCC power has been restored.	No control action taken.
	UPS Fault	The UPS backup for the SCC has a fault.	No control action taken.
	SCADA Fault	The Plant SCADA network has stopped communication with the Controller.	If SCADA is used to provide flow and the SCADA Alarm Action System Setting is set to “Alarm and Default”, the “Default” Flow will be used.
	System In Transition	Indicates that a Low UV Dose Alarm was inhibited during a System Transition (bringing on channel or bank).	No control action taken.
	Low UVT Alarm	UVT is below preset low limit setpoint.	No control action taken.
	UVT Below Design Value	UVT is below the design value.	No control action taken.
	High UVT – Out of Validation Range	Check Validation Range mode only –UVT is above High UVT Validation Range setpoint.	No control action taken.
	Flow Meter Override Value Used	Manually entered Flow Override value is being used.	No control action taken.
	Low Flow – Out of Validation Range	Check Validation Range mode only – Flow is below Low Flow Validation Range setpoint.	No control action taken.
HSC	HSC Remote Wipe Inhibited	Conditions exists that will not allow a remote wipe of any HSC wiper groups.	Remote wiping is disabled for this HSC.
Channel	Channel Design Flow Exceeded	Channel Flow exceeds the Design Flow setpoint.	No control action taken.
	Channel Maximum Flow Velocity Exceeded	Channel Flow exceeds the Maximum Flow Velocity setpoint.	No control action taken.
	Channel Flow Limit For Wiping Exceeded	Channel Flow exceeds the Maximum Flow for Wiping setpoint.	Wiper groups in the channel will be disabled
	Channel Maintenance Mode Enabled	Channel has been placed into Maintenance Mode	Channel will be unable to run in Auto mode. Channel and Bank Alarms to SCADA will be masked.

Confidential - Company Proprietary

System Level	Alarm Name	Description	Controls Action In Remote Auto
Bank	Bank Not In Remote Auto	The bank is not in “Remote Auto” Mode.	Bank is excluded from Auto Pacing.
	Bank Low Water Level Warning	With flow present, channel water level is below the low mechanical setpoint for less than the minor alarm time.	No control action taken.
	PDC Fan Failure	The PDC fan has a fault, as indicated by a BCB input.	No control action taken.
	PDC High Temperature Warning	Warning that the PDC cabinet temperature is increasing as indicated by a BCB input.	No control action taken.
	Lamp Failure	One or more lamps have failed in the bank.	No control action taken.
	Lamp Lifetime Exceeded	One or more of the lamps in the bank have exceeded the lamp lifetime setpoint.	No control action taken.
	Lamp Driver Communication Failure	Indicates a communication failure between the BCB and lamp driver(s).	No control action taken.
	Lamp Driver Failure	Indicates a lamp driver(s) has failed in the bank.	Bank is flagged as unhealthy. Another bank will be brought online if possible.
	UVI Sensor Fault – Non SBC	The 4-20mA signal from the bank UVI sensor is below 2mA or above 20.5mA. Only applies if the operator configurable “Use Theoretical” setting is “Always” or “On Failure”.	No control action taken.
	UVI Sensor Lower Than Expected – Non SBC	The UVI sensor is reading lower than the theoretical limit value.	No control action taken
	UVI Sensor Reference Check Required	The UVI Sensor Reference Check Required timer has expired; a reference check of the bank UVI sensor(s) is required to maintain system performance.	No control action taken - Human intervention is required to perform a UVI sensor reference check.
	UVI Sensor Reference Check Active	A UVI Sensor Reference Check is currently being performed on the bank.	Remote wiping disabled for the associated wiper group.
	Wiper Not In Remote	Wiper Group is not set to “Remote” at the HSC.	No control action taken.
	Wiper Position Unknown	The wiper has lost its “Home” position due to a Wiper Group Jammed or Wiper Retract Travel Time Exceeded Fault. (Latched)	The affected wiper group is disabled until condition reset at HSC.
	Lift Attempted With Lamps Energized	Lifting the banks was attempted while the lamps were still energized.	No control action taken.

Confidential - Company Proprietary

2.05 Security

The SCC controller will be configured with security access restrictions according to the three (3) different access levels defined in the table below.

Level	User	Description of Access	User Name
1	No Login*** (Default)	User may view all unrestricted data.	- - -
2	Operator	User may view all unrestricted data and enter process data, control process equipment and adjust process control setpoints. The password protection can be removed by placing the “Operator Login Required” System Setting to “No”.	OP
3	Maintenance	User has access to configuration of process control strategies and displays	OP1

*** The Login button will show “LOGIN” when there are no users logged in.

3. BANK CONTROL

3.01 Control Architecture

The control system architecture has been designed such that each bank in the system will be controlled by a separate Bank Control Board (BCB). Each bank consists of an array of lamp drivers that monitor and control up to two (2) UV lamps each. Lamp drivers are connected through a Modbus RS-485 communication link to the Bank’s BCB, which generates the necessary signals to control the lamp drivers. Lamp and lamp driver status information is passed back to the BCB. The SCC Controller does not communicate directly with the lamps or lamp drivers, but will route desired bank commands to the associated BCB.

All BCB’s communicate with the SCC to accept commands and exchange status information related to its associated bank. Additionally, the BCB has four critical alarms which will shut down a bank:

3.01.1 “Bank Not In Place”

A “Bank Not In Place” alarm is generated when a bank is not in place in the channel. The alarm input is wired directly to the contactor of the respective bank; the BCB will also override all lamps under its control to an off state immediately. A “Bank Not in Place” alarm will also disable the automatic wiping functionality of the affected bank.

3.01.2 “PDC High Temperature Shutdown”

A “PDC High Temperature Shutdown” alarm is generated when the internal temperature of the PDC exceeds the high limit. This alarm input is wired directly to the BCB of the respective bank (one BCB per bank); the BCB will override all lamps under its control to an off state immediately.

3.01.3 “Bank Low Water Level”

A “Low Water Level” alarm is generated when the water level in a channel is below the fixed level sensor. The signal from this sensor is connected to the BCB “Low Water Level” discrete input of each bank in the channel as a “Bank Low Water Level” for local protection of the bank.

Confidential - Company Proprietary

3.01.4 "Bank PDC Disconnect OFF"

A "Bank PDC Disconnect OFF" alarm is generated when the corresponding Bank's disconnect feedback contacts transitions from closed to open circuit. The disconnect feedback is directly connected to the respective Bank's BCB. The BCB will override all lamps under its control to an off state immediately.

3.02 Bank Control Mode Selection

The UVSigna banks can be operated in "Local Off", "Local On" or "Remote" Control Modes. The selection of "Local Off", "Local On" or "Remote" Mode is made through a 3-way selector switch mounted on the associated PDC, which is wired to the BCB. When a bank is in "Local Off" Mode, all lamp drivers are de-energized. When a bank is in "Local On" Mode, the BCB will energize the bank at full power. When a bank is in the "Remote" Mode, the SCC is in control of the bank. There are three Bank Remote Modes of Operation: "Off", "On" and "Auto".

3.03 Bank Control Mode Operation

There are five possible operational modes that a bank can be placed into: "Local On", "Local Off", "Remote Off", "Remote On" and "Remote Auto". When a bank is in "Local" Mode ("Local On" or "Local Off"), the SCC has no control over the bank. When a bank is in "Remote" Mode, the SCC is responsible for controlling the bank.

3.03.1 "Local Off"

When a bank is placed into "Local Off", the bank will be commanded to turn off immediately if it was running. The bank will remain off while in this mode of operation.

3.03.2 "Local On"

When a bank is placed into "Local On", the bank will operate at 100% power level.

3.03.3 "Remote Off"

When a bank is placed into "Remote Off", the bank will be commanded to turn off immediately if it was running. A warning screen will prompt the user for confirmation. The bank will remain off while in this mode of operation.

3.03.4 "Remote On"

When a bank is placed into "Remote On", the bank will operate at 100% power level.

3.03.5 "Remote Auto"

A bank in "Remote Auto" is controlled by the Auto Pacing routine. The SCC will control the number of banks that are operating and the BCB will determine the power level the bank must operate at to meet the Target Dose.

In "Remote Auto" Mode, all banks are requested to turn on for a configured warm-up time, and then will change to the power level that is requested by the Auto Pacing routine within the BCB once the warm-up timers expire. Additionally, all banks running in "Remote Auto" Mode in a channel will be forced to full power any time any additional bank within the channel is in a warm-up phase. When a bank is no longer required by the Auto Pacing routine, the bank will remain running at a minimum

Confidential - Company Proprietary

power level until a configured Bank Time-Off period expires. The Auto Pacing routine is further described in Section 8 *Auto Pacing*.

The following table summarizes the available bank control modes:

Bank Mode	BCB Power Level Control	Power Level
Local Off	BCB	Off
Local On	BCB	100%
Remote Off	SCC	Off
Remote On	SCC	100%
Remote Auto	SCC	Off or 30% - 100% Auto Pacing Routine Set

As a bank operates, each BCB will record the Bank Hours, Bank Cycles, Bank Lamp Hours, and Individual Lamp Hours. An operator can reset/override the Bank Cycles, Bank Lamp Hours, and Individual Lamp Hours from the Operator Interface. When an operator resets/overrides the Bank Lamp Hours all Individual Lamp Hours are automatically set.

3.04 Bank Fault System Control Behavior

Banks are subject to a number of fault conditions which may be a minor priority and identify a service requirement, may be major priority and result in a bank either being shut down when in “Remote Auto” Mode or run at full power as required, or may be critical and prevent the bank from running in any mode. All alarms are subject to a minor, major, critical or individually configured alarm delay timers. Refer Section 2.04 *System Fault Conditions* for more information.

4. HYDRAULIC CONTROL

4.01 Control Architecture

Each Hydraulic System Center (HSC) is able to control the hydraulic operations for up to four (4) banks in the system; the banks controlled by the same HSC must be in the same channel. Additional HSC units will be provided as required to control additional banks in the channel. The SCC will communicate to each HSC in the channel separately at unique configured addresses. The hydraulic operations for each bank include:

- Wiping Control – one wiper group per bank
- Bank Lifting Control

The HSC contains a controller which is used to monitor the hydraulic operation related inputs and to control the wiping and bank lifting functionality of each bank. The SCC Controller communicates with each HSC Controller using a Modbus RS-485 network. Through this network, the SCC Controller is able to send commands and configuration settings to HSC, and read HSC and Wiper Group status.

4.02 HSC Lift Control

In addition to controlling the wiping operations, each HSC also controls the bank lifting operation. Bank lifting uses the existing hydraulic pump from the wiping system to hydraulically lift banks in and out of a channel, one at a time. Since the same pump is used for both lifting and wiping operation, the HSC can only perform one operation at a time. The HSC has a two-position selector switch used to select HSC “Lift” or “Wiping” Mode. While the HSC is in “Lift” Mode, no wiping will be permitted for any of the wiper groups controlled by the HSC. If the HSC Mode is changed from “Wiping” to “Lift” while a wiping operation is taking place, a lift request will not be completed until the wiping in progress is completed.

4.03 Wiping Control Modes

If Wiping Control is enabled, each bank in the system will have a separate wiper group assigned to it. Each wiper group can be set to “Local Off”, “Local On” or “Remote” Control Modes. The mode selection is made through a 3-way selector switch mounted on the HSC, which is wired to discrete inputs of the HSC Controller.

4.03.1 Wiper Group “Local Off” Mode

When a Wiper Group Control Mode is set to “Local Off” the wiper will be inhibited from wiping.

4.03.2 Wiper Group “Local On” Mode

When a Wiper Group Control Mode is set to “Local On”, the wiper group will wipe based on local commands made through the Wiper Operation Selection Switch: “Extend”, “Retract” or “Sequence”. If more than one wiper group in a HSC is placed into “Local On” Mode, only the first wiper group placed into “Local On” will begin to operate - all other wiper groups set to “Local On” will be ignored. The HSC is only capable of wiping one group at a time. When the HSC Wiper Operation Selection Switch is switched to “Local Retract”, a wiper retract sequence will occur and then the hydraulic system will be shut down. When the HSC Wiper Operation Selection Switch is switched to “Local Extend”, a wiper extend sequence will occur and then the hydraulic system will be shut down. When the HSC Wiper Operation Selection Switch is switched to “Local Sequence”, a wiper extend sequence will occur, followed immediately by a wiper retract sequence and then the hydraulic system will be shut down.

4.03.3 Wiper Group “Remote” Mode

When a wiper group is in “Remote” a wipe sequence may be initiated by an operator through the Operator Interface (Manual Wipe Request), or initiated by the HSC based on an operator selectable elapsed time basis (Automatic Wipe Request). The SCC Controller can request a remote wipe of a bank when the measured UV Intensity is lower than expected (negative deviation) in an attempt to rectify possible lamp and UVI sleeve fouling.

Manual Remote Wipe Request – Single Wiper Group

Through the “Wiper Detail” Screen on the Operator Interface, the operator can request a manual remote wipe sequence of a single wiper group in “Remote” Mode. Only one wiper group can be wiped at a time. As a result, if any wiper group in a HSC is currently wiping, the Manual Remote Wipe Request is not available to the operator for all wiper groups in that HSC.

Manual Remote Wipe Request – All Wiper Groups

Through the “Wiper Overview” Screen on the Operator Interface, the operator can request a manual remote wipe sequence of all wiper groups in the system in “Remote” Mode. The HSC will co-ordinate the order in which wiper groups controlled by the same HSC are wiped, one at a time.

The SCC Controller will inhibit a Manual Wipe Request of all Wiper Groups if the HSC is inhibited from Remote Wiping, or all wiper groups in each HSC are inhibited from Remote Wiping.

Automatic Wipe Request

All Wiper Groups in “Remote” Mode in a HSC will be scheduled by the HSC for an automatic wipe when the “Wiper Cycle Time Delay” has elapsed. This time delay is an operator enterable System Setting from the Operator Interface sent to each HSC – if this value is set to 0 the Automatic Wiper functionality is disabled.

Confidential - Company Proprietary

For each HSC in the system, when the “Wiper Cycle Time Delay” has elapsed in the HSC Controller, a wipe sequence will be scheduled for all configured wiper groups in “Remote” Mode in the HSC. The HSC will control the order in which the wiper groups will be wiped, one at a time. Once the automatic wipe has been completed, the “Wiper Cycle Time Delay” will be reset.

Controller Remote Wipe Request

The SCC Controller can request a remote wipe of the bank. When the measured UV Intensity is lower than expected (UV Intensity negative deviation), the SCC Controller will request a remote wipe of the bank in an attempt to rectify any possible sleeve fouling.

If the negative deviation still exists after the bank has been wiped, or the SCC Controller is inhibited from requesting a remote wipe of the bank, a “UVI Sensor Lower Than Expected Fault” will be initiated.

The following table further summarizes the available control modes:

Mode	Action Initiated By	Wiper Action
Wiping - Local Off	HSC	Off
Wiping - Local Extend	HSC	Initiate extend sequence
Wiping - Local Retract	HSC	Initiate retract sequence
Wiping - Local Sequence	HSC	Initiate extend and then retract sequence
Wiping - Remote Auto	HSC	Automatic sequence initiated for all enabled wiper groups
	SCC	Operator Interface initiated Manual Remote Wipe sequences of a single wiper group or of all wiper groups in the system
	SCC	Controller initiated Remote Wipe sequence for UVI negative deviation
Bank Lifting	HSC	Wiper operations in progress are completed, and then wiping is inhibited.

4.04 Hydraulic System Fault System Control Behavior

Wipers and the lifting mechanism are subject to a number of fault conditions, which may be critical in nature and result in a HSC being shut off. Some wiper fault conditions - whether they are critical, major, or minor - must be reset by placing all wiper groups of the HSC into “Local Off” mode. All alarms are subject to a minor, major or critical alarm delay timers. Refer to Section 2.04 *System Fault Conditions* for more information.

Confidential - Company Proprietary

5. FLOW INPUT

A flow signal or flow value over SCADA is required for the Auto Pacing functionality in the UVSigna System. UVSigna will use one flow signal input or flow value over SCADA for control and assume that the flow is split evenly between active channels, and assumes that all of the flow allocated to a channel will pass through all banks in that channel. Flow can be displayed in m^3/hour, m^3/day, GPM, L/s and US MGD units as standard options.

5.01 Flow Measurement Modes

5.01.1 Analog Flow Signal

A 4-20mA analog flow signal is brought in through the SCC Controller analog input card and scaled to a configurable engineering units range. The raw signal counts are passed through a signal scaling routine to convert to the configured engineering units value, and then passed through a debouncing filter routine. If an analog flow meter fault occurs, the system flow will be set to the “Default” Flow System Setting. An operator may adjust the “Default” Flow value at any time through the System Settings screen of the Operator Interface.

The operator can manually override the flow from the System Overview screen of the Operator Interface. A minor alarm will be posted to indicate that the flow meter override value is being used.

5.02 Flow Fault System Control Behavior

Depending on channel flow conditions and/or flow meter status a critical or major alarm could be generated resulting in the system running at full capacity for disinfection. All alarms are subject to a minor, major, critical or individually configured alarm delay timers. A fault with an individually configured alarm delay timer could result in banks timing off under certain configurable conditions. Refer to Section 2.04 *System Fault Conditions* for more information.

6. UVT INPUT SIGNAL

A UVT signal is required for the UVSigna Auto Pacing functionality. UVSigna will use one UVT signal input for control and assume that the effluent flow through all operating banks is at the same UVT value. UVT is displayed as a percentage (%).

6.01 UVT Measurement Modes

6.01.1 Manual UVT Entry

The operator manually sets the system UVT value from the System Overview screen on the Operator Interface. The UVT meter override value option is disabled, as the system UVT is already manually set.

6.02 UVT Fault System Control Behavior

UVT faults may be major in nature resulting in the system running at full capacity for disinfection or minor with no control action taken. Refer to Section 2.04 *System Fault Conditions* for more information.

Confidential - Company Proprietary

7. INTENSITY INPUT SIGNAL

A UV Intensity signal is provided for each UV bank. This signal originates from a 4-20 mA sensor probe mounted within a bank of lamps, and is terminated at the BCB.

7.01 Intensity Measurement Modes

Measured Intensity is required for dose calculations. The UV Intensity value is calculated at the BCB using the 4-20mA UVI signal, and is made available to the SCC Controller as a raw mA value and as a scaled value in mW/cm^2. The UVI sensor value is continuously compared against a theoretical value determined from the UVI sensor equation associated with the selected dose calculation method. The resulting Sensor Deviation percentage is used by the BCB to determine whether the sensor is currently reading lower than expected and is compared to configured Alarm Setpoints for alarm and warning indications.

A reference sensor check procedure can be initiated by the operator through the Operator Interface; this procedure will step through the process of checking the output of a UV Intensity sensor against a calibrated sensor.

7.02 Intensity Fault System Behavior

Intensity faults may be major in nature resulting in the affected bank being flagged as unhealthy and remote wipe request by the controller to be inhibited. Depending on the minor fault condition remote wipe requests can also be inhibited by the controller; other minor fault conditions result in no control action taken. Refer to Section 2.04 *System Fault Conditions* for more information.

NOTE: The UVI value on the Bank Screen will display a ">" symbol if the UVI Deviation value is more than the Positive Deviation % value that is hard coded in the SCC Controller at 20%. For dose pacing purposes, the BCB will clamp the UVI reading at 1.2x the expected UVI value that is constantly calculated. The S/S0 ratio that is calculated will also be clamped at a maximum value of 1.0 by the BCB.

8. AUTO PACING

Auto Pacing consists of Equipment Pacing and Dose Pacing and applies to banks in "Remote Auto" mode.

Equipment Pacing is executed by the SCC Controller, and will determine the number of UV channels and banks required to achieve the System Target RED at design conditions.

Dose Pacing is completed by each BCB in the UV System. The BCB will independently determine the bank power required to meet the Bank RED Target set by the SCC Controller.

Both of these pacing operations are covered in the sections below.

8.01 Equipment Pacing (SCC Controller)

8.01.1 Control Architecture

The UVSigna control system will allow the staging of banks in individual channels as required. In addition, the system can control a single upstream channel isolation inlet gate per channel. If the channel isolation devices cannot be monitored by the SCC Controller, a channel can be "Enabled" or "Disabled" from the Operator Interface to allow operators to indicate when a channel is required to disinfect process flow. It is assumed that in multi-channel systems the flow through each channel is to be split equally between all open channels, and the flow through each bank in a channel is to be equal.

Each channel is equipped with a separate channel low water level sensor. The signal from this sensor is connected to the BCB Low Water Level discrete input of each bank in the channel. The Low Water

Confidential - Company Proprietary

Level status for each channel is provided to the SCC Controller through the Modbus RS-485 communications protocol between the SCC Controller and the BCBs. The SCC Controller uses this status for alarming as well as control of the banks when under SCC control (Remote Mode). The Low Water Level discrete inputs at the BCBs provide local protection of the bank when in "Remote" or "Local" Mode.

Not Enough Healthy Channels (NEHC)

If the number of healthy channels is less than the number of channels required, a "Not Enough Healthy Channels" (NEHC) alarm is latched for the system. When this alarm is active, all channels in the system will be opened, and all banks in all channels will be run at full power including any banks previously shut down for lamp or lamp driver faults. It is possible in this condition for some banks to remain off due to:

- Bank(s) not in "Remote Auto" Mode
- "Bank Not In Place" Fault
- "PDC High Temperature Shutdown" Fault
- SCC to BCB Communication Fault
- Low Water Level Shutdown Faults

Channel Maintenance Mode

Each channel has the ability to be put into maintenance mode. In this mode, no auto pacing will occur and the equipment in the channel will not run regardless of the presence of flow. The relative channel and bank alarms to SCADA will be masked except for the Maintenance Mode alarm. All equipment can be run individually either in manual or in local.

8.01.2 Bank Control Operation

The Bank Control Operation of the Equipment Pacing routine is used to control the number of UV banks that are operating in each channel, and the RED Target for each bank. Banks are assigned a Lead/Lag status by the SCC Controller. This will be updated every time a bank priority sort occurs. Lag banks are brought in and out of operation by the Equipment Pacing routine as required.

Number of Banks Required

The Bank Control Operation of the Equipment Pacing routine will determine how many banks are required based upon a Bank Dose Capacity – the maximum dose that a bank can achieve based on a predicted flow, current system parameters and System Settings. Each channel will separately calculate the number of banks required based on the Bank Dose Capacities of the available banks in the channel. The number of banks required in each channel can vary. Each "Remote Auto" bank in a channel will run at the necessary power level to achieve the Bank RED Target. The power level for each bank can be different (dependent on factors such as UV Intensity and lamp failures). The bank power level can be modulated between 30% and 100% power.

Bank Turning On

If the required number of banks is greater than the current number of banks operating, a lag bank will be immediately called to operate. When the Equipment Pacing routine determines that more banks are required to be started, the request is processed immediately by the bank control routine. If a lag bank is required to be energized, its bank control routine will energize the lamps in the bank and execute the bank warm-up routine. During this time, all operating banks in "Remote Auto" in the channel will also be held at full power. Once all banks are warmed up in the channel, they will go to the power level assigned by the BCB Dose Pacing routine (based on the Bank RED Target set by

Confidential - Company Proprietary

the Equipment Pacing routine). Banks will not be included in the dose calculations until their warm-up is complete.

Bank Turning Off

If the required number of banks is less than the current number of banks operating, a lag bank will be called to shut down. The bank control routine will initiate a Bank Time-Off timer (typically 15 to 30 minutes). While a bank is timing-off, it will run at the minimum operating power level (30%) for the duration of the Bank Time-Off Delay. Once the Bank Time-Off timer expires, the bank will be shut off. If the bank is required for Equipment Pacing during the Bank Time-Off delay time, the bank will exit the time-off sequence, reset the Bank Time-Off timer and begin to Auto Pace once again. The Bank Time-Off timer serves to minimize the number of bank on/off cycles due to fluctuating process conditions.

Priority and Availability

The order in which banks are called to run is determined by the priority and availability of the banks.

Priority: Each bank in a channel is assigned a unique priority used to determine the order in which banks will be called to run or turned off.

Availability: The availability of each bank is dependent on the Bank Mode and Bank Health.

The Equipment Pacing routine will try to run the "*Number of Banks Required*", starting with the highest priority bank (Lead) first. If the Lead Bank is **not** available, then the routine will try to run the next priority bank (1st Lag). This continues until the routine either finds enough available banks to run or there are not enough available banks and a channel fault ("Not Enough Healthy Banks") is generated.

If a bank running in "Remote Auto" Mode (controlled by Auto Pacing) becomes unavailable, another bank will be requested to run in its place. If another bank is not available to run, a channel fault ("Not Enough Healthy Banks") is generated.

Not Enough Healthy Banks (NEHB)

If the number of banks required to meet the required System RED are not available in the channel, a channel "Not Enough Healthy Banks" (NEHB) alarm will be generated. This alarm will cause all available "Remote Auto" banks in the channel to be turned on and run at 100% power until another healthy channel can be brought on-line (if available), or the fault is cleared. The fault will be cleared once the number of banks required to run in the channel to meet the required System RED is less than or equal to the number of healthy banks in the channel.

Banks that are in "Remote Off" Mode or banks that have an "Inoperable Alarm" will remain off, while banks that are in "Remote On" Mode will continue to run in "Remote On" Mode at 100% power level.

8.01.3 Lead/Lag Priority Sort

In order to maintain even wear on all equipment, UVSigna has functionality designed to automatically sort the priority of the channels and banks within channels.

Channel priority sort is based on an Automatic Sort Timer set by the operator at the Operator Interface. The expiration of this timer will initiate a Channel Sort. The order of priority of the channels in the system is assigned based on the sum of the runtime hours of all banks in each channel. The highest priority channel will be the channel with the lowest runtime hours.

An operator can override the automatic sort logic at any time and assign a specific priority to each channel by changing to a Manual Channel Priority Mode. No automatic sorting will occur.

Bank priority is continuously evaluated and sorted. The order of priority of the banks in a channel is determined based on bank lamp hours, bank mode, and bank health. Banks that are faulted, not in auto, and have high lamp hours will have the lowest priority. Healthy banks in remote auto with low lamp hours will have the highest priority. Sorting based on bank lamp hours will only occur if the hours difference between two banks is greater than the entered Bank Sort Hours Difference.

An operator can override the automatic sort logic at any time and assign a specific priority to each bank by changing to a Manual Bank Priority Mode. No automatic sorting will occur.

8.02 Dose Pacing

The Dose Pacing routine in the BCB is used to control the bank operating power level to meet or exceed the Bank RED Target set by the SCC Controller. All lamps operating in a UV bank will operate at the same power level and are modulated between 30% and 100% power by the Dose Pacing routine.

8.02.1 Dose Calculation

Each bank in the system independently calculates the RED (in mJ/cm^2) it is delivering based on:

- Flow through the bank
- Input UVT signal (or manually entered value)
- Microbe Sensitivity (D10)
- Number of lamps configured
- Number of lamps in operation (account for faults, etc.)
- Bank Power Level
- Number of banks on in the channel

When the Dose Pacing routine determines that a bank must increase or decrease its power, the power is staged to allow the UV Intensity sensor reading to respond to the change in bank power.

The RED delivered by each channel is determined by summing the calculated RED of each bank in the channel currently running, regardless of their operational status (“Local On”, “Remote Auto”, “Remote On”, “Warming” or “Timing-Off”).

The System RED is set to the lowest calculated channel RED of all channels with flow present. If the System RED value falls below the Target RED value, a Low UV Dose alarm condition is set.

8.03 Auto Pacing Fault System Control Behavior

Auto Pacing faults may be critical in nature resulting in a channel to be flagged as unhealthy. A major fault will result in the system to run at full capacity for disinfection. Refer to Section 2.04 *System Fault Conditions* for more information.

9. POWER FAILURE DETECTION

9.01 Power Failure at SCC

When a power failure occurs at the SCC controller, the SCC Controller control program will detect that it is running its first pass of the program. When this occurs, the control logic returns the system to normal operation as it was before the power failure occurred. When the SCC is in a power failure state, BCBs that are in “Remote

Confidential - Company Proprietary

Auto" Mode will operate in accordance with the "Communication Failure Action" System Setting: "Stay Same" or "Turn On". When the system is configured for "Stay Same" operation, if a bank in "Remote Auto" was running when communications was lost with the SCC, the BCB will run the bank at full power. Otherwise, if the bank in "Remote Auto" was off when communications was lost with the SCC, the bank will remain off. Alternatively, if the system is configured for "Turn On" operation, a bank in "Remote Auto" will be run at full power by the BCB when communications is lost with the SCC.

9.02 Power Failure Detected by BCB

When a power failure occurs at the BCB for a sufficient duration, the BCB that experiences the power failure will set a Power on Reset bit for five (5) minutes.

9.03 Power Failure Fault System Control Behavior

Power failure faults may be critical or minor in nature resulting in no control action to be taken. When a "System Power on Reset" alarm occurs the controller will maintain normal operation as it was prior to the power outage. Refer to Section 2.04 *System Fault Conditions* for more information.

10. SYSTEM TRENDING

The Operator Interface will store trended data in files that are accessible for file transfer while the UV system is in operation (either through removable media or file transfer). The data files can be imported into Excel for diagnostic purposes. All data trended will be sampled on a change in data, with a maximum sampling rate of 1 minute, and stored to a data log file. A maximum of 1,000,000 data points is available for storing data history, providing over 60 days of data history. The following data points will be trended:

- Current System Flow
- Current UVT
- Reduction Equivalent Dose (RED)

A Trend window on the Operator Interface will be configured to display Flow, UVT and RED on the same screen. The Trend window will be configured with a moving 8 hour timescale and will display Flow, UVT and RED as engineering units.

Confidential - Company Proprietary

11. PLANT SCADA INTERFACE

11.01 Plant SCADA Interface Architecture

The SCC Controller will act as a slave node only and will not initiate any communication messaging or data transfers, but will respond to polling messages on the required network address. SCADA information will be available in a selection of contiguous 16-bit integer addresses as defined in the data table shown in the following sections. A minimal amount of data will also be able to be transferred from a SCADA system to the SCC Controller.

SCADA interface protocols that are available as standard options are listed in the specific Control Software specification documents for individual Controller platforms.

11.02 Plant SCADA Addressing Summary

Description	Tag Name	Number of Words	Direction
System Control	N_SCADA_CTRL	7	From SCADA to UV System
System Status	N_SCADA_SYS	11	To SCADA from UV System
Channel 1 Status	N_SCADA_CH1[0]	10	To SCADA from UV System
Channel 1 Bank A Status	N_SCADA_CH1[10]	10	To SCADA from UV System
Channel 1 Bank B Status	N_SCADA_CH1[20]	10	To SCADA from UV System
Channel 1 Bank C Status	N_SCADA_CH1[30]	10	To SCADA from UV System
Channel 2 Status	N_SCADA_CH2[0]	10	To SCADA from UV System
Channel 2 Bank A Status	N_SCADA_CH2[10]	10	To SCADA from UV System
Channel 2 Bank B Status	N_SCADA_CH2[20]	10	To SCADA from UV System
Channel 2 Bank C Status	N_SCADA_CH2[30]	10	To SCADA from UV System

11.03 Plant SCADA Interface Read Data

The following data will be available to be read from the SCC Controller by the Plant SCADA:

MAPPED ADDRESS	TAG DESCRIPTION	UNITS
SYSTEM DATA		
N_SCADA_SYS[0].0	Common minor alarm	1 = Fault
N_SCADA_SYS[0].1	Common major alarm	1 = Fault
N_SCADA_SYS[0].2	Common critical alarm	1 = Fault
N_SCADA_SYS[0].3	Common HSC alarm	1 = Fault
N_SCADA_SYS[0].4	Watchdog pulse	2s On then 2s Off
N_SCADA_SYS[1].0	SCC run on UPS	1 = Fault
N_SCADA_SYS[2].0	Low UV dose alarm	1 = Fault
N_SCADA_SYS[2].1	Not enough healthy channels	1 = Fault
N_SCADA_SYS[2].3	Low UVT - out of validation range	1 = Fault
N_SCADA_SYS[2].4	Flow meter fault	1 = Fault
N_SCADA_SYS[2].5	High flow - out of validation range	1 = Fault
N_SCADA_SYS[2].6	Low flow alarm	1 = Fault
N_SCADA_SYS[2].7	SCC Controller fault	1 = Fault
N_SCADA_SYS[3].0	SCC Controller low battery	1 = Fault

Confidential - Company Proprietary

MAPPED ADDRESS	TAG DESCRIPTION	UNITS
N_SCADA_SYS[3].1	System power on reset	1 = Fault
N_SCADA_SYS[3].2	SCC power restored	1 = Fault
N_SCADA_SYS[3].3	UPS fault	1 = Fault
N_SCADA_SYS[3].4	SCADA fault detected	1 = Fault
N_SCADA_SYS[3].5	System in transition	1 = In Transition
N_SCADA_SYS[3].6	UVT below design value	1 = Fault
N_SCADA_SYS[3].7	Low UVT alarm	1 = Fault
N_SCADA_SYS[3].8	UVT meter override value used	1 = Fault
N_SCADA_SYS[3].9	High UVT – out of validation range	1 = Fault
N_SCADA_SYS[3].10	Flow meter override value used	1 = Fault
N_SCADA_SYS[3].11	Low flow – out of validation range	1 = Fault
N_SCADA_SYS[4]	System flow	Flow Units x Flow Scaling Factor
N_SCADA_SYS[5]	Calculated system UV dose	mJ/cm2 x100
N_SCADA_SYS[6]	UV transmittance	% x10
N_SCADA_SYS[7]	Flow Scaling Factor	1=1 2=10 3=100 4=0.1 5=0.01
CHANNEL 1 - GENERAL DATA		
N_SCADA_CH1[0].0	CH 1 minor alarm	1 = Fault
N_SCADA_CH1[0].1	CH 1 major alarm	1 = Fault
N_SCADA_CH1[0].2	CH 1 critical alarm	1 = Fault
N_SCADA_CH1[0].3	CH 1 HSC alarm	1 = Fault
N_SCADA_CH1[0].4	CH 1 in operation	1 = In Operation
N_SCADA_CH1[0].5	CH 1 low water level condition	1 = Low Water
N_SCADA_CH1[0].8	CH 1 Offline Mode enabled	1 = Offline Enabled
N_SCADA_CH1[1].1	CH 1 not enough healthy banks	1 = Fault
N_SCADA_CH1[1].3	CH 1 design flow exceeded	1 = Fault
N_SCADA_CH1[1].4	CH 1 maximum flow velocity exceeded	1 = Fault
N_SCADA_CH1[1].5	CH 1 flow limit for wiping exceeded	1 = Fault
N_SCADA_CH1[1].15	CH 1 maintenance mode enabled	1 = Enabled
N_SCADA_CH1[3].0	HSC 1 hydraulic tank low level	1 = Fault
N_SCADA_CH1[3].1	HSC 1 pump fault	1 = Fault
N_SCADA_CH1[3].2	HSC 1 - SCC communication fault	1 = Fault
N_SCADA_CH1[3].3	HSC 1 remote wipe inhibited	1 = Inhibited
CHANNEL 1 - BANK DATA		
N_SCADA_CH1[10].0	Bank 1A minor alarm	1 = Fault
N_SCADA_CH1[10].1	Bank 1A major alarm	1 = Fault
N_SCADA_CH1[10].2	Bank 1A critical alarm	1 = Fault
N_SCADA_CH1[10].3	Bank 1A HSC alarm	1 = Fault
N_SCADA_CH1[10].4	Bank 1A in operation	1 = Operating
N_SCADA_CH1[11].0	Bank 1A wiper jammed	1 = Fault
N_SCADA_CH1[11].1	Bank 1A wiper travel time exceeded	1 = Fault
N_SCADA_CH1[11].2	Bank 1A wiper not in remote	1 = Fault
N_SCADA_CH1[11].3	Bank 1A wiper unknown position	1 = Fault

Confidential - Company Proprietary

MAPPED ADDRESS	TAG DESCRIPTION	UNITS
N_SCADA_CH1[11].4	Bank 1A lift attempted with lamps energized	1 = Fault
N_SCADA_CH1[12].0	Bank 1A PDC high temp shutdown	1 = Fault
N_SCADA_CH1[12].1	Bank 1A not in place	1 = Fault
N_SCADA_CH1[12].2	Bank 1A low water level shutdown	1 = Fault
N_SCADA_CH1[12].3	Bank 1A PDC disconnect off	1 = Off
N_SCADA_CH1[12].4	Bank 1A SCC-PDC comm fault	1 = Fault
N_SCADA_CH1[12].5	Bank 1A multi lamp failure	1 = Fault
N_SCADA_CH1[12].6	Bank 1A configuration mismatch	1 = Fault
N_SCADA_CH1[12].7	Bank 1A not enough healthy lamps	1 = Fault
N_SCADA_CH1[12].8	Bank 1A UVI sensor faulted - SBC	1 = Fault
N_SCADA_CH1[12].9	Bank 1A UVI lower than expected	1 = Fault
N_SCADA_CH1[12].10	Bank 1A BCB DIPSwitch mismatch	1 = Fault
N_SCADA_CH1[13].1	Bank 1A not in remote auto	1 = Fault
N_SCADA_CH1[13].2	Bank 1A low level warning	1 = Fault
N_SCADA_CH1[13].3	Bank 1A PDC fan failure	1 = Fault
N_SCADA_CH1[13].5	Bank 1A PDC high temperature warning	1 = Fault
N_SCADA_CH1[13].6	Bank 1A lamp failure	1 = Fault
N_SCADA_CH1[13].7	Bank 1A lamp lifetime exceeded	1 = Fault
N_SCADA_CH1[13].8	Bank 1A lamp driver failure	1 = Fault
N_SCADA_CH1[13].9	Bank 1A lamp driver comm failure	1 = Fault
N_SCADA_CH1[13].10	Bank 1A lamp disabled	1 = Disabled
N_SCADA_CH1[13].11	Bank 1A UVI sensor faulted - Non SBC	1 = Fault
N_SCADA_CH1[13].12	Bank 1A UVI lower than expected warning	1 = Fault
N_SCADA_CH1[13].13	Bank 1A UVI reference check required	1 = Fault
N_SCADA_CH1[13].14	Bank 1A UVI reference check active	1 = Active
N_SCADA_CH1[14]	Bank 1A lamp hours	Hours
N_SCADA_CH1[15]	Bank 1A lamp power	Power (%)
N_SCADA_CH1[16]	Bank 1A UVI	mW/cm2 x1000

11.04 **SCADA Interface Write Data**

The following data will be available to be written from the Plant SCADA system to the SCC Controller:

Tag Name	Description	Units
N_SCADA_CTRL[0]	UV system total flow	Flow Units x Flow Scaling Factor
N_SCADA_CTRL[5].1	SCADA heartbeat signal	2s On then 2s Off

11.05 **SCADA Fault Conditions**

A SCADA fault is minor in nature and depending on configuration settings the “Default” flow will be used. Refer to 2.04 *System Fault Conditions* for more information.

Confidential - Company Proprietary

Revision History

Rev	Description	Revision By	Approved By	Date
1.0	For Submittal Approval	MEC	JLT	Dec 21, 2021
1.1	Added UPS as per build sheet rev B	MEC	PT	Nov 7, 2022

Confidential - Company Proprietary

CALCULATIONS & CERTIFICATIONS

SECTION CONTENTS

Calculations

TrojanUVSigna™ Headloss Calculation

TrojanUVSigna™ Dose Calculation

Certifications

TrojanUVSigna™ Validation Test Certification

TrojanUVSolo™ Lamp 1000W PSS Measurement

TrojanUVSolo™ End of Lamp Life Factor Letter

TrojanUVSolo™ Fouling Factor Letter

HYDRAULIC INFORMATION

The TrojanUVSigna™ has undergone third-party validation with Carollo Engineers. As part of this validation, headloss testing was conducted over a range of flows and characterized in the equation form presented below.

$$Headloss_{Channel} = (AQ^2 + BQ + C)\ x\ Banks \quad \text{(Equation 1)}$$

Where:

$Headloss_{Channel}$	= UV system (UV banks only) head loss per channel (inches)
Q	= flow per lamp per bank, calculated as the total flow divided by the number of lamps in a single bank, in units of gallons per minute per lamp (gpm/lamp/bank),
Banks	= Number of banks per channel,
A,B,C	= Model coefficients obtained by fitting the equation to the validation headloss data

For El Centro, CA, the design conditions are:

- Peak Design Flow: 8 MGD(US) per duty channel

And proposed UV system configuration is:

- Number of Channels: 2
- Number of Banks/Channel: 3 Banks per Channel
- Number of Lamps/Bank: 8

To calculate the UV system channel head loss for the configuration of the TrojanUVSigna™ the following should be deteremined per Equation 1.

1. Flowrate per lamp/bank:
   16 MGD ÷ 2 Duty Channels = 8 MGD per Channel = 5555.6 GPM per channel.

   The flowrate per lamp/bank is therefore:
   5555.6 GPM ÷ (8 Lamps/Bank) = 694.45 gpm/lamp per bank

2. Calculate the head loss per UV channel of the system proposed:
   From Equation 1:
   $Headloss_{Channel} = 1.06$ x 3 banks
   $= 3.19$ inches
   $Headloss_{Weir} = 2.90$ inches
   $Total\ Headloss = 6.09$ inches

CONFIDENTIAL

HYDRAULIC INFORMATION

The TrojanUVSigna™ has undergone third-party validation with Carollo Engineers. As part of this validation, headloss testing was conducted over a range of flows and characterized in the equation form presented below.

$$Headloss_{Channel} = (AQ^2 + BQ + C)\ x\ Banks \quad \text{(Equation 1)}$$

Where:

$Headloss_{Channel}$	= UV system (UV banks only) head loss per channel (inches)
Q	= flow per lamp per bank, calculated as the total flow divided by the number of lamps in a single bank, in units of gallons per minute per lamp (gpm/lamp/bank),
Banks	= Number of banks per channel,
A,B,C	= Model coefficients obtained by fitting the equation to the validation headloss data

For El Centro, CA, the design conditions are:

- Peak Design Flow: 24 MGD(US) per duty channel

And proposed UV system configuration is:

- Number of Channels: 2
- Number of Banks/Channel: 3 Banks per Channel
- Number of Lamps/Bank: 8

To calculate the UV system channel head loss for the configuration of the TrojanUVSigna™ the following should be deteremined per Equation 1.

1. Flowrate per lamp/bank:
   24 MGD ÷ 2 Duty Channels = 12 MGD per Channel = 8333.33 GPM per channel.

   The flowrate per lamp/bank is therefore:
   8333.33 GPM ÷ (8 Lamps/Bank) = 1041.67 gpm/lamp per bank

2. Calculate the head loss per UV channel of the system proposed:
   From Equation 1:
   $Headloss_{Channel}$ = 2.17 x 3 banks
   = 6.51 inches
   $Headloss_{Weir}$ = 3.80 inches
   $Total\ Headloss$ = 10.31 inches

CONFIDENTIAL

VALIDATED UV SYSTEM SIZING METHODOLOGY

The TrojanUVSigna™ reactor has undergone third-party bioassay validation with Carollo Engineers which confirms the UV dose delivery for system sizing. The validation was conducted in general accordance with the NWRI and USEPA UVDGM protocols. A sensor based control equation is used to monitor real time lamp output (accounts for fouling and lamp aging) for accurate UV dose calculation. Multiple challenge organisms were used to bracket a range of pathogens with varying UV sensitivities in wastewater. Evaluating UV reactor performance using multiple organisms (i.e. T1 and MS2) leads to a robust UV system design that optimizes energy consumption while ensuring disinfection requirements are met.

The third-party bioassay sizing equation for the TrojanUVSigna was developed in the equation forms presented in Equation 1 and Equation 2.

$$\log i = 10^{A} \times UVA^{B} \times \left(\frac{S/S_0}{Q \times D_L} \right)^{C+D \times UVA} \times Bank^{E}$$

(Equation 1)

$$RED = \log i \times D_L$$

(Equation 2)

Where:

logi	= Log inactivation of the challenge microorganisms (MS2 or T1) or other organism with a UV sensitivity (mJ/cm2/log inactivation) between T1 and MS2
RED	= Reduction equivalent dose, mJ/cm^2
Q/lamp	= flow per lamp per bank, calculated as the total flow divided by the number of lamps in a single bank, in units of gallons per minute per lamp (gpm/lamp/bank),
UVA	= UV light absorbance at 254 nm (per cm); where UVA = -log (UVT/100),
S	= Duty sensor intensity, mW/cm^2
S_o	= Duty sensor intensity at 100% lamp power setting, mW/cm^2
D_L	= UV sensitivity of the challenge microorganism, mJ/cm^2/log inactivation
A,B,C,D,E,	= Model coefficients obtained by fitting the equation to the validation data

For El Centro, CA, the design conditions are:

- Peak Design Flow: 8 MGD(US) per duty channel
- Design Dose: 30 mJ/cm² (MS2 RED)
- UV Transmittance: 62%
- End of Lamp Life Adjustment Factor (EOLL): 0.86
- Fouling Factor (FF): 0.94

And proposed UV system configuration is:

- Number of Channels: 2 Duty
- Number of Duty Banks/Channel: 3 Duty Banks per Channel
- Number of Lamps/Bank: 8
- Total number of Lamps: 8 Lamps/Bank x 3 Banks/Ch x 1 Channel = Total 24 Lamps

To calculate the MS2 RED for the configuration of the TrojanUVSigna™ the following should be deteremined per Equation 1.

1. Total number of duty lamps in the system offered: 24

2. Flowrate per lamp/bank:
   16 MGD ÷ 2 Duty Channels = 8 MGD per Channel = 5555.6 GPM per channel.

   The flowrate per lamp/bank is therefore:
   5555.6 GPM ÷ (8 Lamps/Bank) = 694.45 gpm/lamp per bank

3. $\left(\frac{S}{S_o}\right)$ = For sizing, use 100% Lamp power, and apply EOLL and FF
   = 1 x 0.86 x 0.94 = 0.81

4. Calculate the MS2 RED dose of the system proposed:

   From Equation 1 and Equation 2:

   $RED =$ 35.8 $\mathrm{mJ/cm^2}$

CONFIDENTIAL

Engineers...Working Wonders With Water®

January 20, 2017

Wayne Lem, P.Eng.
Trojan Technologies
3020 Gore Road
London, ON N5V 4T7

Subject: Validation Test Certification
TrojanUVSigna™ (2-Row) Ultraviolet Disinfection System
NWRI 2012 UV Guidelines

Dear Wayne:

This letter certifies that the bioassay validation testing was completed for the TrojanUVSigna™ 2-Row UV disinfection system in September 2016. The testing and data analysis was conducted in accordance with the *Ultraviolet Disinfection Guidelines for Drinking Water and Water Reuse* (National Water Research Institute [NWRI]/Water Research Foundation, August 2012), hereinafter called the NWRI 2012 UV Guidelines.

All microbiological enumerations were completed by GAP EnviroMicrobial Services Ltd. (London, Ontario, Canada). Carollo witnessed all aspects of the validation, including dimensional verification of the test set up and UV reactor, operational conditions for each test, and sampling. UV sensor responses were also witnessed, as they will be used to develop the sensor based performance equations for the system.

The final validation report, which will be available by January 31, 2017, will document the validated range for the TrojanUVSigna™ 2-Row as well as the Reduction Equivalent Dose (RED) performance equation in accordance with the NWRI 2012 UV Guidelines. A summary of the validated range is presented in Table 1 below.

2700 Ygnacio Valley Road, Suite 300, Walnut Creek, California 93711
P. 925.932.1710
carollo.com

Table 1 Validated Range for Use of the RED_{MS2} Equation		
Flow Rate [(1)] (US gpm/lamp)	**UVT [(2)] (%)**	**Ballast Power Level (%)**
99.4 - 1,211	39.7 - 80.0	30 - 100

Notes:

(1) At flow rates below 99.4 US gpm/lamp, this value (99.4 gpm/lamp) should be used as the default value in the RED calculation. The flow rate is calculated by dividing the total flow rate in a channel by the number of lamps in one bank. For this validation testing, one bank was comprised of eight (8) UV lamps.

(2) At UVT values above 80.0 percent, this value (80.0 percent UVT, or 0.097 A_{254}) should be used as the default value in the RED calculation.

Please feel free to distribute this letter to your potential customers.

Regards,

CAROLLO ENGINEERS, INC.

Bill Sotirakos, P.Eng.
Principal UV Technologist

2700 Ygnacio Valley Road, Suite 300, Walnut Creek, California 93711
P. 925.932.1710
carollo.com

January 30, 2013

Trojan Technologies
3020 Gore Road
London, Ontario
N5V 4T7

Project: Trojan Technologies 908069-200 Lamp (1000W) PSS Measurement

To Whom It May Concern:

HDR|HydroQual has verified lamp-output measurements carried out on two low-pressure mercury amalgam 1000W UV lamps (Part # 908069-200) manufactured for Trojan Technologies. The lamps had been burned-in for 100 hours and were operated at their full rated electrical input power during the test. The measurements were witnessed by HDR|HydroQual. Using a Point Source Summation irradiance model, the maximum steady-state output that was recorded for each lamp during testing was 421.2 and 420.1 Watts at 254 nm. At 1000 Watts input power, this corresponds to a UVC lamp efficiency of 42.1% and 42.0%, respectively.

Chengyue Shen, Ph.D.
Technical Director of the UV Center
chengyue.shen@hdrinc.com

END-OF-LAMP-LIFE (EOLL) FACTOR CERTIFICATION
For The
TROJAN TECHNOLOGIES 1KW SOLO G2 LAMP AT 15,000 HOURS

This is to certify that the lifetime performance validation of the Trojan Technologies 1kW Solo G2 lamp (Trojan PN 908069-200) was conducted successfully from January 2013 to June 2015. The validation was conducted primarily by Trojan employees at the Trojan Lamp Lab in London, ON, Canada, and was witnessed by personnel from Henningson, Durham & Richardson Architecture and Engineering, P.C. (HDR) and GAP EnviroMicrobial Services Ltd. (GAP). The validation was performed in accordance with the Ultraviolet Disinfection Guidelines for Drinking Water and Water Reuse (National Water Research Institute [NWRI]/American Water Works Association Research Foundation [AwwaRF], 2nd edition, May 2003).

HDR provided QA/QC reviews on all generated data and analyzed the data jointly with Trojan. It is concluded that an End-Of-Lamp-Life (EOLL) factor of 0.86 can be assigned to the Trojan Technologies 1kW Solo G2 lamp (Trojan PN 908069-200) at 15,000 hours.

Henningson, Durham & Richardson Architecture and Engineering, P.C.

Date: November 25, 2015

Chengyue Shen, P.E., Ph.D., Manager, HDR Technology Validation Center

hdrinc.com 1 International Boulevard, 10th Floor, Suite 1000, Mahwah, NJ 07495-0027
(201) 335-9300

April 29, 2013

Steve McDermid
Validation and Research Services
Trojan Technologies
3020 Gore Rd.
London, Ontario, Canada N5V 4TV

Re. UV Quartz Sleeve Cleaning System Performance for the TrojanUVSigna™ and TrojanUVSonus™ UV Disinfection Systems

This letter serves to verify that HDR|HydroQual has provided third party witness on the UV lamp sleeve cleaning system performance test conducted by Trojan Technologies at the Greenway Pollution Plant (London, ON, Canada) for the quartz sleeves used in the TrojanUVSigna™ and TrojanUVSonus™ reactors. The test protocol used conformed to the Ultraviolet Disinfection Guidelines for Drinking Water and Water Reuse (National Water Research Institute [NWRI]/American Water Works Association Research Foundation [AwwaRF], May 2003). HDR|HydroQual has analyzed the associated data comprising of UV lamp sleeve transmittance measurements (at 254 nm), and can verify that the average sleeve fouling factor is 0.94.

Chengyue Shen, Ph.D., P.E.
Technical Director of the UV Center
chengyue.shen@hdrinc.com

WARRANTIES

SECTION CONTENTS

Equipment Limited Warranty
Amalgam Lamp Limited Warranty
Lamp Driver Limited Warranty
UV Intensity Limited Warranty
Performance Guarantee
Warranty Claim Form
Lamp Recycling Program & Form

December 31, 2021

Equipment Limited Warranty-810206 El Centro, CA

The following terms and conditions will govern the equipment warranty provided by Trojan Technologies to the Owner/Operator:

Period of Coverage: Trojan Technologies ("Trojan") warrants to the Owner/Operator noted above (the "Customer") that if within 24 calendar months from equipment Substantial Completion or 30 calendar months from the date of delivery (the "Warranty Period"), whichever comes first, equipment manufactured by Trojan (the "Equipment") will be free from defects in material and workmanship and will function in accordance with the specifications agreed to by Trojan for the Equipment.

> "Substantial Completion" is the date on which the Equipment commissioning and start-up is sufficiently completed such that the Equipment is capable of being put into operation such that the Owner can utilize the Equipment for its intended disinfection use.

Customer must notify Trojan in writing within 5 days of the date of any Equipment failure. This notification shall include a description of the problem, a copy of the operator's log, a copy of the Customer's maintenance record and any analytical results detailing the problem. If Customer has not maintained the operator's log and maintenance record in the manner directed in the Operation and Maintenance manual, or does not notify Trojan of the problem as specified above, this warranty may, in Trojan's discretion, be invalid.

If a defect occurs, Trojan will, at its option, repair or replace the defective component free of charge, provided that:

1. Customer fully cooperates with Trojan, in the manner requested by Trojan, in attempting to diagnose and resolve the problem by way of telephone support. If the problem can be diagnosed and verified by telephone support and a replacement part is required, Trojan will either ship at Trojan's expense, a repaired, reworked or new part to the Customer, who will install such part as directed by Trojan, or direct Customer to acquire, at Trojan's expense, such part from a third party and to install such part as directed by Trojan;
2. In the event that Trojan determines that the problem cannot be resolved by way of telephone support and/or shipment by Trojan, or acquisition by the Customer of a replacement part for installation by the Customer, Trojan will send one or more persons to make an onsite inspection of the problem. If an onsite visit is made, Trojan personnel will evaluate the problem and repair or replace any Equipment determined to be in breach of this warranty. If the problem is not attributable to a breach of this warranty, Trojan reserves the right to invoice the Customer for this service; and
3. The Equipment is covered and the failure occurs within the Warranty Period

Trojan will, at its option, use new and/or reconditioned parts in performing warranty repair. Trojan has the right to use parts or products of original or improved design in the repair or replacement.

The products or general components replaced or repaired free of charge under the Equipment Limited Warranty are warranted only for the *remaining* portion of the original Equipment Limited Warranty Period.

Limitations: This warranty shall not apply to any failure or defect which results from:

- the Equipment not being operated and maintained in strict accordance with instructions specified in the Operation and Maintenance manual or Product Bulletin or which results from mishandling, misuse, neglect, improper storage, improper operation of the Equipment with other equipment furnished by the Customer or by other third parties or from defects in designs or specifications furnished by or on behalf of the Customer by a person other than Trojan.
- Equipment that has been altered or repaired after start-up by anyone except: (a) authorized representatives of Trojan, or (b) Customer acting under specific written instructions from Trojan.
- Use of parts not supplied or approved by Trojan

This warranty does not cover:

- Equipment components manufactured by third parties but furnished to Customer by Trojan are warranted by the original manufacturer, only to the extent of the original manufacturer's warranty
- Normal wear and tear of the product
- Consumable components including but not limited to wiper seals, cleaning chemical, batteries
- Trojan supplied components that are the subject of a separate warranty
- Costs related to removal, installation, or troubleshooting of a component
- Physical damage
- Improper installation
- Acts of God, terrorism, biological infestations, or input voltage that create operating conditions beyond the minimum or maximum limits listed in the Operations Manual including high input voltage from generators and lightening strikes
- Damage caused by improper return packaging
- Taxes, duties or brokerage fees (if any)

This warranty is the exclusive remedy for all claims based on a failure of or defect in the Equipment, whether the claim is based on contract (including fundamental breach), tort (including negligence), strict liability or otherwise. This warranty is in lieu of all other warranties whether written, oral, implied or statutory. Without limitation, no warranty of merchantability or fitness for a particular purpose shall apply to the Equipment.

Trojan does not assume any liability for personal injury or property damage caused by use or misuse of the Equipment. Trojan shall not in any event be liable for special, incidental, indirect or consequential damages including, without limitation, lost profits, lost business opportunities, lost revenue or loss or depreciation of goodwill, even if it has been advised of the possibility thereof. Trojan's liability shall, in all instances, be limited to repair or replacement of Equipment in breach of this warranty and shall not exceed the cost of such repair or replacement. This liability with respect to repair or replacement will terminate upon the expiration date of this warranty.

In addition to the foregoing, in no event shall Trojan's liability relating to the Equipment, or the agreement between Trojan and the Customer relating to the Equipment, exceed that portion of the purchase price for the Equipment which is actually paid to Trojan.

TrojanUV - A Division of Trojan Technologies Group ULC
3020 Gore Road, London, Ontario, Canada N5V 4T7 T 519.457.3400 F 519.457.3030 www.trojanuv.com

TrojanUV Solo Lamp™ Limited Warranty
TrojanUVSigna™

Warranty Coverage:

The following warranty applies to Trojan Technologies Low Pressure Lamps (the "Lamps") for the TrojanUVSigna. The warranty is only valid with respect to a Lamp that is properly stored, handled and installed as specified in the Operation and Maintenance manual supplied with the system in which the Lamp is installed or as outlined in subsequent Product Bulletins. Without limiting the generality of the foregoing, any excess vibration or improper operation of a Lamp shall void this warranty. In addition, Trojan Technologies shall not be liable for any Lamp failure which results from UV equipment not being operated and maintained in strict accordance with the instructions set out in the Operation and Maintenance manual or as outlined in Product Bulletins.

In order to process any Lamp warranty claim, Trojan Technologies requires the Customer to provide a copy of the operator's log, all maintenance records and a completed Warranty Claim Form within one (1) month of the lamp failure. Failure to meet these terms will void the Lamp warranty.

Trojan Technologies reserves the right to require the Customer to return a failed Lamp to Trojan Technologies' facilities for inspection. Failure to return the Lamp when requested shall void the warranty.

Period of Coverage:

When a Lamp has been stored, handled and installed as specified in the Operation and Maintenance manual or as outlined in Product Bulletins, and the relevant UV equipment has been operated and maintained in accordance with instructions specified in the Operation and Maintenance manual, and:

1. The Lamp fails within the first 9,000 hours of operation; Trojan Technologies shall provide the Customer with a replacement Lamp free of charge.
2. The Lamp fails after 9,000 hours and prior to 15,000 hours of operation; Trojan Technologies shall provide the Customer with a replacement Lamp at a discounted price. The following formula is used to determine the discounted price for the replacement Lamp:

   Replacement Lamp Price = ((Lamp Operating Hours) / 15,000 x Lamp List Price)

Regardless of actual Lamp operating hours, the Lamp warranty is void if the date of Lamp failure occurs more than thirty-six (36) calendar months after the Lamp shipment date from Trojan Technologies.

The above operating conditions of Lamps are based on an average of 4 On/Off cycles, per 24 hour period, accumulated over the total guaranteed life of the Lamp.

Limitations:

This limited warranty does not cover:

- Lamps that have been used with parts not supplied or approved by Trojan Technologies
- Lamps that have been physically damaged or fail due to corrosion, exposure to contaminants (e.g. effluent), incorrect installation or operation
- Costs related to troubleshooting, removal, or installation
- Damage caused by improper return packaging
- Taxes, duties or brokerage fees (if any)

The above warranty is the exclusive remedy for all claims based on a failure of or defect in a Lamp, whether the claim is based on contract (including fundamental breach), tort (including negligence), strict liability or otherwise. This warranty is in lieu of all other warranties whether written, oral, implied or statutory. Without limitation, no warranty of merchantability or of fitness for a particular purpose shall apply to a Lamp.

Trojan Technologies does not assume any liability for personal injury or property damage caused by use or misuse of a Lamp. Trojan Technologies shall not, in any case, be liable for special, incidental, indirect or consequential damages, even if it has been advised of the possibility thereof. Trojan Technologies' liability shall not, in any case, exceed the cost of replacement of a defective Lamp.

TrojanUV - A Division of Trojan Technologies Group ULC
3020 Gore Road, London, Ontario, Canada N5V 4T7 T 519.457.3400 F 519.457.3030 www.trojanuv.com

Lamp Driver Limited Warranty
TrojanUVSigna™

Warranty Coverage:

The following warranty applies to the Trojan Technologies Lamp Driver (the "Lamp Driver") for the Trojan TrojanUVSigna. The warranty is only valid with respect to a new Lamp Driver that is purchased as: (i) a component of a new system, (ii) a spare part shipped with a new system, or (iii) a purchased replacement component, and that is properly stored, handled and installed as specified in the Operation and Maintenance manual supplied with the system in which the Lamp Driver is installed or as outlined in subsequent Product Bulletins. Without limiting the generality of the foregoing, any excess vibration or improper operation of the Lamp Driver shall void this warranty. In addition, Trojan Technologies shall not be liable for any Lamp Driver failure which results from UV equipment not being operated and maintained in strict accordance with the instructions set out in the Operation and Maintenance manual or Product Bulletins.

Trojan Technologies reserves the right to require the Customer to return failed Lamp Drivers to Trojan Technologies' facilities for inspection along with the operator's log and maintenance records. Failure to return the Lamp Driver or provide logs or records when requested shall void the warranty.

Period Of Coverage:

Where a Lamp Driver has been stored, handled and installed as specified in the Operation and Maintenance manual, and the relevant UV equipment has been operated and maintained in accordance with instructions specified in the Operation and Maintenance manual or Product Bulletin, and:

1. The Lamp Driver fails within one (1) calendar year after the Warranty Start Date, Trojan Technologies shall provide the Customer with a replacement Driver free of charge.

2. The Lamp Driver fails after the first (1st), and before the tenth (10th) anniversary of the Warranty Start Date, Trojan Technologies shall provide the Customer with a replacement Lamp Driver at a discounted price. The following formula is used to determine the discounted price for the replacement Driver:

   Replacement Lamp Driver Price = ((Number of Elapsed Months) / 120 x List Price)

The "Warranty Start Date" is, in the case of a Lamp Driver forming part of a new system installation or shipped as a spare part with a new system, the commissioning date of the new system. In the case of a Lamp Driver purchased as a replacement component, warranty start date is the shipment date of the Lamp Driver. One "Elapsed Month" shall be deemed to have passed at the beginning of the day in each subsequent month that is the same calendar day as the day on which the Warranty Start Date falls, or the first day of the next following month if the Warranty Start Date falls on a day not present in any particular month. For example, if the Warranty Start Date is January 10, one Elapsed Month will have occurred on each of February 10 and March 10, but if the Warranty Start Date is January 29, one Elapsed Month will have occurred on each of March 1 and March 29.

In order to assess and process any Lamp Driver warranty claim, Trojan Technologies requires the Customer to notify Trojan by submitting a completed Warranty Claim Form within one (1) month of the component failure. Failure to meet these terms will void the Lamp Driver warranty.

Limitations:

This limited warranty does not cover:

- Lamp Drivers that have been used with parts not supplied or approved by Trojan Technologies
- Lamp Drivers that have been physically damaged or fail due to corrosion, improper installation, exposure to moisture or abnormal stresses
- Damage caused by power quality disturbances falling outside the acceptable voltage tolerance of the ITIC (CBEMA) curve referenced from IEEE Standard 1100-2005
- Costs related to troubleshooting, removal or installation
- Damage caused by improper return packaging
- Taxes, duties or brokerage fees, if any.

The above warranty is the exclusive remedy for all claims based on a failure of or defect in a Lamp Driver, whether the claim is based on contract (including fundamental breach), tort (including negligence), strict liability or otherwise. This warranty is in lieu of all other warranties whether written, oral, implied or statutory. Without limitation, no warranty of merchantability or of fitness for a particular purpose shall apply to a Lamp Driver.

Trojan Technologies does not assume any liability for personal injury or property damage caused by use or misuse of a Lamp Driver. Trojan Technologies shall not in any case be liable for special, incidental, indirect or consequential damages, even if it has been advised of the possibility thereof. Trojan Technologies' liability shall not, in any case, exceed the cost of the Lamp Driver.

TrojanUV - A Division of Trojan Technologies Group ULC
3020 Gore Road, London, Ontario, Canada N5V 4T7 T 519.457.3400 F 519.457.3030 www.trojanuv.com

UV Intensity Sensor Limited Warranty
TrojanUVSigna™

Warranty Coverage:

The following warranty applies to the Trojan Technologies UV Intensity Sensor (the "Sensor") for the TrojanUVSigna. The warranty is only valid with respect to a new Sensor that is purchased as: (i) a component of a new system, (ii) a spare part shipped with a new system, or (iii) a purchased replacement component, and that is properly stored, handled and installed as specified in the Operation and Maintenance manual supplied with the system in which the Sensor is installed or as outlined in Product Bulletins. Without limiting the generality of the foregoing, any excess vibration or improper operation of the Sensor shall void this warranty. In addition, Trojan Technologies shall not be liable for any Sensor failure which results from UV equipment not being operated and maintained in strict accordance with the instructions set out in the Operation and Maintenance manual or Product Bulletins.

In order to assess and process any Sensor warranty claim, Trojan Technologies requires the customer to notify Trojan within one (1) month of the failure and submit a completed Sensor Claim Form (See Attachment) otherwise the warranty shall be void.

Trojan Technologies reserves the right to require the Customer to return failed Sensors to Trojan Technologies' facilities for inspection along with the operator's log and maintenance records. Failure to return the Sensor or provide logs or records when requested shall void the warranty. Trojan Technologies will cover the return shipping expense.

Period Of Coverage:

Where a Sensor has been stored, handled and installed as specified in the Operation and Maintenance manual, and the relevant UV equipment has been operated and maintained in accordance with instructions specified in the Operation and Maintenance manual or Product Bulletin, and:

1. the Sensor fails within one (1) calendar year after the Warranty Start Date, Trojan Technologies shall provide the Customer with a replacement Sensor free of charge;
2. the Sensor fails after the first (1st), and before the fifth (5th), anniversary of the Warranty Start Date, Trojan Technologies shall provide the Customer with a replacement Sensor at a discounted price. The following formula is used to determine the discounted price for replacement Sensors:

   Replacement Sensor Price = ((Number of Elapsed Months) / 60 x Sensor List Price)

The "Warranty Start Date" is, in the case of a Sensor forming part of a new system installation or shipped as a spare part with a new system, the commissioning date of the new system and, in the case of a Sensor purchased as a replacement component, the shipment date of the Sensor. One "Elapsed Month" shall be deemed to have passed at the beginning of the day in each subsequent month that is the same calendar day as the day on which the Warranty Start Date falls, or the first day of the next following month if the Warranty Start Date falls on a day not present in any particular month. (For example, if the Warranty Start Date is January 10, one Elapsed Month will have occurred on each of February 10 and March 10, but if the Warranty Start Date is January 29, one Elapsed Month will have occurred on each of March 1 and March 29.)

Limitations:

This limited warranty does not cover:

- Sensor Calibration. Calibration is considered a routine maintenance item.
- Sensors that have been used with parts not supplied or approved by Trojan Technologies.
- Sensors that have been physically damaged or fail due to corrosion, improper installation, exposure to moisture, or abnormal stresses.
- Costs related to removal, installation, or troubleshooting.
- Damage caused by improper return packaging.
- Taxes, duties or brokerage fees, if any.

The above warranty is the exclusive remedy for all claims based on a failure of or defect in a Sensor, whether the claim is based on contract (including fundamental breach), tort (including negligence), strict liability or otherwise. This warranty is in lieu of all other warranties whether written, oral, implied or statutory. Without limitation, no warranty of merchantability or of fitness for a particular purpose shall apply to a Sensor.

Trojan Technologies does not assume any liability for personal injury or property damage caused by use or misuse of a Sensor. Trojan Technologies shall not in any case be liable for special, incidental, indirect or consequential damages, even if it has been advised of the possibility thereof. Trojan Technologies' liability shall not, in any case, exceed the cost of the Sensor.

TrojanUV - A Division of Trojan Technologies Group ULC
3020 Gore Road, London, Ontario, Canada N5V 4T7 T 519.457.3400 F 519.457.3030 **www**.trojanuv.com

Performance Guarantee

Trojan Technologies certifies to El Centro that the TrojanUVSigna™ Disinfection Equipment supplied will disinfect to the limits of < 200 Fecal Coliform /100mL based upon a 30 Day Geometric Mean and provided the following criteria is upheld.

PEAK FLOW: 16 MGD

SUSPENDED SOLIDS: ≤ 30 mg/L Based on a 30 Day Average

UV TRANSMITTANCE @ 253.7 nm: 62% Minimum

TROJAN LAMP HOURS: ≤ 15,000

DOSE: ≥ 30 mJ/cm²

This performance guarantee is also contingent upon proper care and maintenance of the unit, as detailed within the Operation and Maintenance Manual, and the use of Trojan approved parts. The performance guarantee is specific to the plant treatment process and water quality reviewed at the time of bid and conditioned on the absence of water and operating conditions which may adversely affect the equipment provided, including water conditions falling outside of the parameters listed above.

GET GENUINE.
TROJAN UV
If it's not a Genuine Trojan part, it shouldn't be part of your Trojan system. Genuine Trojan replacement parts ensure performance , safety certifications, compliance and mainenance of your Trojan Lifetime Disinfection Guarantee.
Covered by one or more of the following patents: ***www.trojantechnologies.com/patents***
For information on genuine parts and service, please visit ***www.trojanuv.com/getgenuine.***

TROJANUV™

Warranty Claim Form

Complete all applicable info

Check one:
- ☐ Lamp Driver
- ☐ Lamp
- ☐ UV Sensor

Check one:
- ☐ TrojanUV3000PTP
- ☐ TrojanUV3000B
- ☐ TrojanUV3000
- ☐ TrojanUV3000Plus
- ☐ TrojanUV4000
- ☐ TrojanUV4000Plus
- ☐ TrojanUVSigna
- ☐ TrojanUVSonus

Site/Project Name: _____

Project/Serial #: _____

Part Number: _____

Warranty Claim Form

No.	Date of Installation	Date of Failure	Bank #	Bank Letter	Module or Array	Position / Sensor #	Bank Hours at Install	Bank Hours at Failure	Net Operating Hours	On/Off Cycles	Date Code and Serial Number
1											
2											
3											
4											
5											
6											
7											
8											
9											
10											
11											
12											
13											
14											
15											

Notes:

Completed By: _____

Phone #: _____

Email: _____

*** Submit failures on warranty claim form monthly otherwise warranty claim may be void.**

* Items that are damaged, show signs of corrosion, have been exposed to water, or were not handled, installed, or operated according to the O&M manual are not valid for warranty.

For electronic copy of form please contact our Customer Care Representatives (CCR's) at na.warranty@trojanuv.com

TrojanUV - A Division of Trojan Technologies Group ULC
3020 Gore Road, London, Ontario, Canada N5V 4T7 T 519.457.3400 F 519.457.3030 www.trojanuv.com

January 1, 2017

Recycling Program for Trojan Customers.

HERE'S HOW OUR RECYCLING PROGRAM WORKS:

- Trojan Client Services provides you with a Lamp Recycling form to complete. The form includes such details as pick up address, contact information, lamp quantity, package dimensions, most recent sales order number, special shipping requirements, need for recycling certificate etc.
- Trojan Client Services makes arrangements with our Shipping Department for the pick up at your site.
- Lamps are then shipped from your site to the recycling facility for proper recycling.

According to 40 CFR 261.24 of the United States Environmental Protection Agency's Federal Registry, most fluorescent lamps contain enough mercury to be considered a hazardous waste. If placed in a landfill, the mercury becomes an environmental threat that has the potential to migrate into air and water supplies. Benefits of the recycling of fluorescent lamps include saved landfill space, reduced raw material production needs, and the prevention of toxic material from entering the environment.

Several years ago Trojan Technologies established a UV lamp recycling program for you, our valued customers. Lamps purchased from Trojan and authorized distributors are recycled at no cost to you. Used lamps are delivered to one of two (2) USEPA-approved lamp recycling centers. We use the services of two companies, Environment Recycling and Fluorescent Lamp Recycling.

Contact your Trojan Manufacturer's Representative or our Client Services Department to take advantage of this recycling program.

3020 Gore Road London, Ontario, Canada N5V 4T7
T. 519.457.3400 F. 519.457.3030 www.trojanuv.com

TROJAN UV
WATER CONFIDENCE™

TROJAN UV
WATER CONFIDENCE™

LAMP RECYCLING Request Form

COMPLETED BY:		**DATE SUBMITTED:**	
COMPANY:			

PICK-UP ADDRESS

SITE NAME:	
ADDRESS:	
STATE/PROV:	
COUNTRY:	
ZIP/POSTAL CODE:	
CONTACT NAME:	
PHONE #:	
FAX #:	
ADDITIONAL ADDRESS INFO. i.e. Hours of operation; lobby or warehouse	

DESCRIPTION OF THE GOODS TO BE PICKED UP

QUANTITY PIECES	PART #	DESCRIPTION OF GOODS

SPECIAL INSTRUCTIONS:

FINAL DIMENSIONS OF PACKAGED GOODS TO BE RECYCLED

QUANTITY	SKID OR BOX?	DIMENSIONS (L x W x H) (inches)	WEIGHT PER SKID OR BOX (lbs)
		TOTAL WEIGHT:	

EMAIL completed form to: crm@trojanuv.com

FAX completed form to: 1-800-591-0585

GET GENUINE.

"If it's not a Genuine Trojan part, it shouldn't be part of your Trojan system."

SAFETY DATA SHEETS (SDS)

SECTION CONTENTS

Hg Lamps

ActiClean™ Gel

Mobil DTE 10 Excel 15

Food Machinery Grease

TROJAN UV™

Water Confidence™

SAFETY DATA SHEET

1 Product and Company Identification

Product identifier	Low Pressure High Output Amalgam UV Lamp
CAS #	Mixture
Product use	Ultraviolet (UV) Lamp
Recommended restrictions	None known
Manufacturer information	Trojan Technologies
	3020 Gore Road
	London, ON N5V 4T7 CA
	Phone: 519-457-3400
	Phone: 888-220-6118
Technical assistance #	
Within North America	Phone: 866-388-0488
Outside North America	Phone: 519-457-2318

2 Hazards Identification

Physical hazards	Not applicable to intact lamps.
Health hazards	Not applicable to intact lamps.
Environmental hazards	Not applicable to intact lamps.
WHMIS 2015 defined hazards	
Label elements	
Hazard symbol	Not applicable to intact lamps.
Signal word	Not applicable to intact lamps.
Hazard statement	Not applicable to intact lamps.
WHMIS 2015: Health Hazard(s) not otherwise classified (HHNOC)	None known
WHMIS 2015: Physical Hazard(s) not otherwise classified (PHNOC)	None known
Hazard(s) not otherwise classified (HNOC)	None known
Supplemental information	None

3 Composition/Information on Ingredients

Components	**CAS#**	**Percent**
Indium	7440-74-6	<0.1
Mercury	7439-97-6	<0.1
Composition Comments	*Lamp consisting of quartz glass containing mercury amalgamated with metal(s).	

4 First Aid Measures

Inhalation	Not applicable to intact lamps.
Skin Contact	Not applicable to intact lamps.
Eye Contact	Not applicable to intact lamps.
Ingestion	Not applicable to intact lamps.
General Information	Burns caused by overexposure or severe injuries caused by fragment of quartz glass should be treated by a physician. Ensure that medical personnel are aware of the material(s) involved, and take precautions to protect themselves. If you feel unwell, seek medical advice (show the label where possible). Show this safety data sheet to the doctor in attendance. Avoid contact with eyes and skin. Keep out of reach of children. There are no known health hazards from exposure to intact, un-energized lamps.

5 Fire Fighting Measures

Flammable properties	Not flammable by WHMIS/OSHA criteria.
Suitable extinguishing media	Extinguishing powder, foam, or water.
Unsuitable extinguishing media	Not available
Specific hazards arising from the chemical	Not available
Special protective equipment and precautions for firefighters	Self-contained breathing apparatus and full protective clothing must be worn in case of fire.
Specific methods	Use standard firefighting procedures and consider the hazards of other involved materials.
General fire hazards	No unusual fire or explosion hazards noted.
Hazardous combustion	May include and are not limited to: Mercury, metallic oxides.
Products	Lamp is not combustible.

6 Accidental Release Measures

Personal precautions, protective equipment and emergency procedures	Keep unnecessary personnel away. Do not touch damaged containers or spilled material unless wearing appropriate protective clothing.
Methods and materials for containment	In the event of a lamp breakage, appropriate action should be taken to contain the amalgam mercury. In a dry scenario where the lamp is not operating, solid amalgam mercury can be easily captured. In an operating closed- or open-channel system, a lamp breakage inside an intact sleeve can be easily captured. In an operating closed- or open-channel system, in case of a lamp and sleeve breakage in a system treating the water flow, no containment measure is available. Prevent entry of the solid amalgam mercury into waterways, sewers, or other catchment systems.
Methods and materials for cleanup	If lamps are broken, ventilate the area where the breakage occurred. Take the usual precautions for collecting broken glass. Clean up with a mercury vacuum cleaner or with other suitable means that avoids dust and mercury vapor generation. DO NOT USE A STANDARD VACUUM.

Place collected materials in a closed container to avoid generating dust.

In the event of a lamp breakage, appropriate action should be taken to contain the spill (solid Hg amalgam).

Additional guidance on cleaning up broken lamps may be obtained at:
http://www2.epa.gov/cfl/cleaning-broken-cfl#instructions.

Environmental precautions

Do not discharge into lakes, streams, ponds or public waters.

Do not contaminate water courses or ground.

Prevent entry into waterways, sewers, basements or confined areas.

This material is a water pollutant and should be prevented from contaminating soil or from entering sewage and drainage systems and bodies of water. Prevent entry into waterways, sewers, basements or confined areas.

This material is a water pollutant and should be prevented from contaminating soil or from entering sewage and drainage systems and bodies of water.

7 Handling and Storage

Precautions for safe handling

Handle carefully to avoid breakage.

Ensure adequate ventilation.

Use good industrial hygiene practices in handling this material.

Conditions for safe storage, including any incompatibilities

Keep out of reach of children. Keep in properly labeled containers.

8 Exposure Controls/Personal Protection

Occupational exposure limits

US. ACGIH Threshold Limit Values Components	Type	Value
Indium (CAS 7440-74-6)	TWA	0.1 mg/m^3
Mercury (CAS 7440-74-6)	TWA	0.025 mg/m^3

US. OSHA Table Z-2 (29 CFR 1910.1000) Components	Type	Value
Mercury (CAS 7439-97-6)	TWA	0.1 mg/m^3

Exposure limits

Exposure to mercury is only possible due to lamp breakage, refer Section 6.

Biological limit values

No biological exposure limits noted for the ingredient(s).

Appropriate engineering controls

Use only under good ventilation conditions.

Individual protection measures, such as personal protective equipment, Eye/face protection

Avoid contact with eyes. Wear appropriate safety glasses with side shields (or goggles).

In operation, UV lamps emit non-ionizing radiation in the 180~400 nanometer wavelength region of the electromagnetic spectrum. The UV light intensity greatly exceeds levels found in nature.

Exposure can result in temporary or permanent eye injury, skin burns or other serious effects.

Individuals present where UV lamps are in operation are at risk for UV exposure if the appropriate shielding and Personal Protective Equipment (PPE) are not used.

Refer to product manuals and product warning labels for safe operating procedures and Personal Protective Equipment.

Skin protection: Hand protection

Avoid contact with the skin. Wear impervious gloves. Confirm from a reputable supplier first. If glass is broken, use cut resistance gloves to prevent injury.

Other	Emergency responders should wear impermeable clothing and footwear when responding to a situation where contact with the mercury liquid is possible. Wash hands IMMEDIATELY if mercury leakage occurs. Contaminated clothes must be changed immediately and discarded appropriately.
Respiratory protection	Where exposure guideline levels may be exceeded, use an approved NIOSH respirator.
Thermal hazards	Not applicable
General safety and hygiene consideration	Ultraviolet radiation is emitted from the lamps. Use of approved eye and skin protection to block UV radiation. Handle in accordance with good industrial hygiene and safety practice.

9 Physical and Chemical Properties

Appearance	Article (Solid)
Color	Colorless
Form	Quartz tube containing amalgam mercury and other metals.
Odor	Odorless
Odor Threshold	Not available
Physical State	Solid
pH	Not available
Freezing point	Not available
Boiling point	Not applicable
Pour point	Not available
Evaporation rate	Not available
Flash point	Not applicable
Auto-ignition temperature	Not available
Flammability limits in air, upper, % by volume	Not available
Flammability limits in air, lower, % by volume	Not available
Vapor pressure	In case of breakage, mercury vapor pressure: <0.01 mm Hg at room temperature.

10 Stability and Reactivity

Reactivity	Amalgam mercury is contained in a glass tube and therefore is not able to react with chemicals within the surrounding environment.
Possibility of hazardous reactions	Hazardous polymerization does not occur.
Chemical stability	Stable under recommended storage conditions.
Conditions to avoid	None identified for intact lamps.
Incompatible materials	Amalgam mercury is contained in a glass tube and therefore is not able to react with chemicals within the surrounding area.
Hazardous decomposition products	None identified for intact lamps. In case of breakage: May include and are not limited to: Mercury, metallic oxides.

11 Toxicological Information

Toxicological data

Components	**Species**	**Test Results**
Indium (CAS 7440-74-6)		
LC50		
Not Available		
LD50		
Not Available		
Mercury (CAS 7439-97-6)		
Acute		
Inhalation		
LC50	Rat	2.3 ppm, 4 hr
LD50		
Not Available		

Emergency overview The lamp, which consists of quartz glass, is not dangerous under regular conditions. This item is a manufactured article. The mercury within the lamp is only available if the lamp is broken. Please follow standard health and safety guidelines for the use of this product.

The following statements are applicable only in case of accidental breakage of the lamp:

Routes of exposure Eye, Skin contact, Skin absorption, Inhalation, Ingestion.

Information on likely routes of exposure:

Eyes May cause irritation.

Skin May cause irritation.

US ACGIH Threshold Limit Values: Skin designation

Mercury (CAS 7439-97-6) Hg Can be absorbed through the skin.

US. NIOSH: Pocket Guide to Chemical Hazards

Mercury (CAS 7439-97-6) VAP Hg Can be absorbed through the skin.

Inhalation May cause respiratory tract irritation.

Ingestion May cause stomach distress, nausea or vomiting.

Dermal May cause irritation.

Chronic Effects Long-term occupational exposure to moderate to high levels of mercury (0.035 to 0.1 mg/m3) has resulted in both nervous system and kidney effects. Significant toxicity has been observed in animals exposed to low concentrations.

Signs and symptoms Symptoms of overexposure may be headache, dizziness, tiredness, nausea and vomiting.

12 Ecological Information

Ecotoxicity See below

Ecotoxicological data

Components		**Species**	**Test Results**
Mercury (CAS 7439-97-6)			
Aquatic			
Fish	LC50	Indian catfish (Heteropneustes fossils)	0.099 mg/l, 96 hours

Persistence and degradability Not available

Bioaccumulation / Accumulation Not available

US CWA Bioaccumulative Chemicals of Concern: Listed substance

Mercury (CAS 7439-97-6) Listed

US CWA Bioaccumulative Chemicals of Concern: Listed substance

Mobility in environmental media	Not available
Environmental effects	Not available
Aquatic toxicity	Not available
Partition coefficient	Not available
Chemical fate information	Not available

13 Disposal Information

Disposal instructions	Waste must be disposed of in accordance with federal, state/provincial and local environmental control regulations. This material and its container must be disposed of as hazardous waste.
Waste from residues / unused Products	Not available
Contaminated packaging	Not available

14 Transport Information

UN number	
TDG/US DOT	3506
IMDG/IMO	3506
IATA/ICAO	3506
Remarks TDG/US DOT	This product is not subject to the transportation regulations of dangerous goods by road (ADR) based on special provision 366 (<1 kg mercury per article).
Remarks IMDG/IMO	This product is not subject to the transportation regulations of dangerous goods by sea (IMDG) based on special provision 366 (<1 kg mercury per article).
* Remarks IATA/ICAO	For transport exemptions consult IATA special provisions A48, A69 and A191.
UN proper shipping name	
TDG/US DOT	MERCURY CONTAINED IN MANUFACTURED ARTICLES
IMDG/IMO	MERCURY CONTAINED IN MANUFACTURED ARTICLES
IATA/ICAO	MERCURY CONTAINED IN MANUFACTURED ARTICLES
Transport hazard class(es)	
TDG/US DOT	8 (6.1)
IMDG/IMO	8 (6.1)
IATA/ICAO	8 (6.1)
Packing group	
TDG/US DOT	none
IMDG/IMO	none
IATA/ICAO	none
Environmental hazards	
Marine pollutant	No

15 Regulatory Information

Canadian federal regulations	This product has been classified in accordance with the hazard criteria of the Controlled Products Regulations and the MSDS contains all the information required by the Controlled Products Regulations.

Canada CEPA Schedule I: Listed substance

Mercury (CAS 7439-97-6)	Listed

Canada WHMIS Ingredient Disclosure: Threshold limits

Indium (CAS 7440-74-6)	1%

	Mercury (CAS 7439-97-6)	0.1%

WHMIS classification Exempt - Manufactured article

Occupational Safety and Health Administration (OSHA)

29 CFR 1910.1200 hazardous chemical

No

US federal regulations This product is a manufactured article and is exempt.

US EPCRA (SARA Title III) Section 313 - Toxic Chemical: De minimis concentration

Mercury (CAS 7439-97-6) 1.0 %

Substance is not eligible for the de minimis exemption except for the purposes of supplier notification requirements.

US EPCRA (SARA Title III) Section 313 - Toxic Chemical: Reportable threshold

Mercury (CAS 7439-97-6)	10 lbs

US EPCRA (SARA Title III) Section 313 - Toxic Chemical: Listed substance

Mercury (CAS 7439-97-6)	Listed

TSCA Section 12(b) Export Notification (40 CFR 707, Subpt. D)

Mercury (CAS 7439-97-6)	1.0 % One-Time Export Notification only.

US CWA Bioaccumulative Chemicals of Concern: Listed substance

Mercury (CAS 7439-97-6)	Listed

US CWA Section 307(a)(1) Toxic Pollutants: Listed substance

Mercury (CAS 7439-97-6)	Listed

CERCLA Hazardous Substance List (40 CFR 302.4)

Mercury (CAS 7439-97-6)	Listed

US CAA Section 112(i) High-Risk Hazardous Air Pollutants (HAPs): Weight factor

Mercury (CAS 7439-97-6)	100

US CAA Section 112(i) High-Risk Hazardous Air Pollutants (HAPs): Listed substance

Mercury (CAS 7439-97-6)	Listed

Clean Air Act (CAA) Section 112(r) Accidental Release Prevention (40 CFR 68.130)

Not regulated

Clean Air Act (CAA) Section 112 Hazardous Air Pollutants (HAPs) List

Mercury (CAS 7439-97-6)	Listed

CERCLA (Superfund) reportable quantity

Mercury: 1

Superfund Amendments and Reauthorization Act of 1986 (SARA) Hazard categories

Immediate Hazard	- Yes
Delayed Hazard	- Yes
Fire Hazard	- No
Pressure Hazard	- No Reactivity
Hazard	- No

WARNING: This product contains a chemical known to the State of California to cause birth defects or other reproductive harm.

State regulations

US - California Hazardous Substances (Director's): Listed substance

Indium (CAS 7440-74-6)	Listed
Mercury (CAS 7439-97-6)	Listed

US - California Proposition 65 - Carcinogens & Reproductive Toxicity (CRT): Listed substance

Mercury (CAS 7439-97-6)

US - Illinois Chemical Safety Act: Listed substance

Mercury (CAS 7439-97-6)

US - Louisiana Spill Reporting: Listed substance

Mercury (CAS 7439-97-6)

US - Michigan Critical Materials Register: Parameter number

Mercury (CAS 7439-97-6)

US - Minnesota Haz Subs: Listed substance

Indium (CAS 7440-74-6)	Listed
Mercury (CAS 7439-97-6)	Listed

US - New Jersey RTK - Substances: Listed substance

Indium (CAS 7440-74-6)	Listed
Mercury (CAS 7439-97-6)	Listed

US - New York Release Reporting: Hazardous Substances: Listed substance

Mercury (CAS 7439-97-6)

US - North Carolina Toxic Air Pollutants: Listed substance

Mercury (CAS 7439-97-6)

US - Pennsylvania RTK - Hazardous Substances: All compounds of this substance are considered environmental hazards

Mercury (CAS 7439-97-6)

US - Texas Effects Screening Levels: Listed substance

Indium (CAS 7440-74-6)	Listed
Mercury (CAS 7439-97-6)	Listed

US - Washington Chemical of High Concern to Children: Listed substance

Mercury (CAS 7439-97-6)

US. Massachusetts RTK - Substance List

Indium (CAS 7440-74-6)	Listed
Mercury (CAS 7439-97-6)	Listed

16 Other Information

Disclaimer

The information in the sheet was written based on the best knowledge and experience currently available. Information contained herein was obtained from sources considered technically accurate and reliable. While every effort has been made to ensure full disclosure of product hazards, in some cases data is not available and is so stated. Since conditions of actual product use are beyond control of the supplier, it is assumed that users of this material have been fully trained according to the requirements of all applicable legislation and regulatory instruments. No warranty, expressed or implied, is made and supplier will not be liable for any losses, injuries or consequential damages which may result from the use of or reliance on any information contained in this document.

NFPA Code	(Health: 1) (Flammability: 0) (Reactivity: 0)
Issue Date	22-January-2018
Version #	01
Effective Date	22-January-2018
Prepared by	Manufacturer Personnel

LEGEND	
Severe	4
Serious	3
Moderate	2
Slight	1
Minimal	0

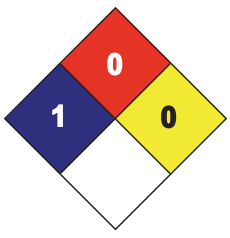

Other Information

For an updated SDS, please contact the supplier/manufacturer listed on the first page of the document.

In the event of a lamp breakage, appropriate action should be taken to contain the spill. Lamp breakage can occur in several scenarios, each requiring different action. In an operating closed- or open-channel system, a lamp and sleeve break will be very difficult to contain since the mercury vapor will quickly condense, be diluted, and subsequently carried away by the flowing wastewater/water stream. Please refer to the Section 6 in order to respond to a lamp breakage.

SAFETY DATA SHEET

1 Product and Company Identification

Product identifier	ActiClean™ Gel
CAS #	Glass cleaner
Recommended restrictions	None known
Manufacturer information	Trojan Technologies
	3020 Gore Road
	London, ON N5V 4T7 CA
	Phone: 519-457-3400
	Phone: 888-220-6118
CANUTEC	Phone: 613-996-6666

2 Hazards Identification

Physical hazards	Not classified
Health hazards	Not classified
Environmental hazards	Not classified
WHMIS 2015 defined hazards Label elements	
Hazard symbol	None
Signal word	None
Hazard statement	The mixture does not meet the criteria for classification.
Precaution statement	
Prevention	Observe good industrial hygiene practices.
Response	Wash hands after handling.
Storage	Store away from incompatible materials.
Disposal	Dispose of waste and residues in accordance with local authority requirements.
WHMIS 2015: Health Hazard(s) not otherwise classified (HHNOC)	None known
WHMIS 2015: Physical Hazard(s) not otherwise classified (PHNOC)	None known
Hazard(s) not otherwise classified (HNOC)	None known
Supplemental information	None

3 Composition/Information on Ingredients

Mixture Composition comments	This product is considered non-hazardous by WHMIS/OSHA criteria.

4 First Aid Measures

Inhalation	If symptoms develop move victim to fresh air. If symptoms persist, obtain medical attention.
Skin Contact	Flush with cool water. Wash with soap and water. Obtain medical attention if irritation persists.
Eye Contact	Hold eye open and rinse gently with water for 15-20 minutes. Remove contact lenses, if present, after the first 5 minutes, then continue rinsing eye.
Ingestion	Rinse mouth. Do not induce vomiting. If vomiting occurs, have victim lean forward to reduce risk of aspiration. Never give anything by mouth if victim is unconscious, or convulsing.
Most important symptoms/effects, acute and delayed	Direct contact with eyes may cause temporary irritation.
Indication of immediate medical attention and special treatment needed	Treat patient symptomatically.
General Information	If feeling unwell, seek medical advice (show the label and SDS where possible). Ensure medical personnel are aware of the material(s) involved, and take precautions to protect themselves. Avoid contact with eyes and skin. Keep out of reach of children.

5 Fire Fighting Measures

Suitable extinguishing media	Water fog. Foam. Dry chemical powder. Carbon dioxide (CO_2).
Unsuitable extinguishing media	Do not use water jet as an extinguisher, as this will spread the fire.
Specific hazards arising from the chemical	During fire, gases hazardous to health may be formed.
Special protective equipment and precautions for firefighters	Self-contained breathing apparatus and full protective clothing must be worn in case of fire.
Fire-fighting equipment/instructions	Move containers from fire area if you can do so without risk.
Specific methods	Use standard firefighting procedures and consider the hazards of other involved materials.
General fire hazards	No unusual fire or explosion hazards noted.
Hazardous combustion Products	May include and are not limited to: Oxides of carbon.

6 Accidental Release Measures

Personal precautions, protective equipment and emergency procedures	Keep unnecessary personnel away. For personal protection, refer to Section 8.
Methods and materials for containment and cleanup	Large Spills: Stop the flow of material, if this is without risk. Dike the spilled material, where this is possible. Cover with plastic sheet to prevent spreading. Absorb in vermiculite, dry sand or earth and place into containers. Following product recovery, flush area with water. Small Spills: Wipe up with absorbent material (e.g. cloth, fleece). Clean surface thoroughly to remove residual contamination.
Environmental precautions	Never return spills to original containers for re-use. For waste disposal, refer to Section 13.

7 Handling and Storage

Precautions for safe handling	Wash thoroughly after handling. Use good industrial hygiene practices in handling this material. When using do not eat or drink.
Conditions for safe storage, including any incompatibilities	Store in original tightly closed container. Store away from incompatible materials (refer to Section 10). Keep out of reach of children.

8 Exposure Controls/Personal Protection

Occupational exposure limits	No exposure limits noted for ingredient(s).
Biological limit values	No biological exposure limits noted for the ingredient(s).
Appropriate engineering controls	Good general ventilation (typically 10 air changes per hour) should be used. Ventilation rates should be matched to conditions. If applicable, use process enclosures, local exhaust ventilation, or other engineering controls to maintain airborne levels below recommended exposure limits. If exposure limits have not been established, maintain airborne levels to an acceptable level.
Individual protection measures, such as personal protective equipment, Eye/face protection	
Eye/face protection	Wear safety glasses with side shields (or goggles).
Skin protection:	
Hand protection	Impervious gloves. Confirm with reputable supplier first.
Other	Wear suitable protective clothing. As required by employer code.
Respiratory protection	Not normally required.
Thermal hazards	Not applicable
General hygiene considerations	Always observe good personal hygiene measures, such as washing after handling the material and before eating, drinking, and/or smoking. Routinely wash work clothing and protective equipment to remove contaminants. When using do not eat or drink.

9 Physical and Chemical Properties

Appearance	Gel
Physical State	Liquid
Form	Gel
Colour	Off-white
Odor	Odorless
Odor Threshold	Not available
pH	1
Melting Point / Freezing Point	-5ºC (23ºF)
Initial Boiling Point	> 100ºC (> 212ºF)
Pour Point	Not available
Specific gravity	1.1
Partition coefficient (n-octanol/water)	Not available
Flash Point	Not available
Evaporation Rate	Not available
Flammability (solid, gas)	Not applicable
Upper/Lower Explosive Limits	Not available
Vapor Pressure	Not available
Vapor Density	Not available
Relative Density	Not available
Solubility(ies)	Not available
Auto-ignition Temperature	Not available

Decomposition Temperature	Not available
Viscosity	Viscous
Other information:	
Explosive properties	Not explosive
Oxidizing properties	Not oxidizing

10 Stability and Reactivity

Reactivity	Reacts violently with strong alkaline substances. This product may react with reducing agents. This product may react with strong oxidizing agents.
Possibility of hazardous reactions	No dangerous reaction known under conditions of normal use.
Chemical stability	Material is stable under normal conditions.
Conditions to avoid	Do not mix with other chemicals.
Incompatible materials	Not corrosive to SAE 1020 Steel or non-clad Aluminum based on test data (UN Manual of Tests and Criteria, Part III, Section 37.1 -Corrosion to metals). May react with soft metals such as aluminum and zinc producing flammable hydrogen gas, Caustics, and Lead.
Hazardous decomposition products	May include and are not limited to : Oxides of carbon.

11 Toxicological Information

Routes of exposure	Eye, Skin contact, Inhalation, Ingestion.
Information on likely routes of exposure	
Ingestion	Expected to be a low ingestion hazard. May cause stomach distress, nausea or vomiting.
Inhalation	Health injuries are not known or expected under normal use.
Skin contact	Not corrosive or irritating to skin based on test data. No adverse effects due to skin contact are expected.
Eye contact	Not corrosive or irritating to eyes based on test data.
Symptoms related to the physical, chemical and toxicological characteristics	Direct contact with eyes may cause temporary irritation.
Information on toxicological effects	
Acute toxicity	Not available
Skin corrosion/irritation	Prolonged skin contact may cause temporary irritation.
Exposure minutes	Not available
Erythema value	Not available
Oedema value	Not available
Serious eye damage/eye irritation	Direct contact with eyes may cause temporary irritation.
Corneal opacity value	Not available
Iris lesion value	Not available
Conjunctival reddening value	Not available
Recover days	Not available
Respiratory or skin sensitization	
Respiratory sensitization	Not a respiratory sensitizers.
Skin sensitization	This product is not expected to cause skin sensitization.
Mutagenicity	No data available to indicate product or any components present at greater than 0.1% are mutagenic or genotoxic.

Carcinogenicity

US - California Proposition 65 - CRT: Listed date/Carcinogenic substance

Crystalline silica (CAS 14808-60-7)

US. OSHA Specifically Regulated Substances (29 CFR 1910.1001-1050)

Not listed

Reproductive toxicity	This product is not expected to cause reproductive or developmental effects.
Teratogenicity	Not available
Specific target organ toxicity (single exposure)	Not classified
Specific target organ toxicity (repeated exposure)	Not classified
Aspiration hazard	Not an aspiration hazard.

12 Ecological Information

Ecotoxicity	Not available
Persistence and degradability	Not available
Bioaccumulative potential	
Mobility in soil	Not available
Mobility in general	Not available
Other adverse effects	Not available

13 Disposal Information

Disposal instructions	Collect and reclaim or dispose in sealed containers at licensed waste disposal site. Dispose in accordance with all applicable regulations.
Local disposal regulations	Dispose in accordance with all applicable regulations.
Hazardous waste code	The waste code should be assigned in discussion between the user, the producer and the waste disposal company.
Waste from residues / unused products	Dispose of in accordance with local regulations. Empty containers or liners may retain some product residues. This material and its container must be disposed of in a safe manner (see: Disposal instructions).
Contaminated packaging	Since emptied containers may retain product residue, follow label warnings even after container is emptied. Empty containers should be taken to an approved waste handling site for recycling or disposal.

14 Transport Information

Transport of Dangerous Goods (TDG) Proof of Classification	In accordance with Part 2.2.1 (SOR/2014-152) of the Transportation of Dangerous Goods. Regulations, we certify that the classification of this product is correct as of the SDS date of issue.

U.S. Department of Transportation (DOT)

Not regulated as dangerous goods.

Transportation of Dangerous Goods (TDG - Canada)

Not regulated as dangerous goods.

15. Regulatory Information

Canadian federal regulations This product has been classified in accordance with the hazard criteria of the HPR and the SDS contains all the information required by the HPR.

Canada DSL Challenge Substances: Listed substance

Crystalline silica (CAS 14808-60-7)	Listed

Export Control List (CEPA 1999, Schedule 3)	Not listed
Greenhouse Gases	Not listed
Precursor Control Regulations	Not regulated
WHMIS 2015 Classifications	Not applicable
US federal regulations	
TSCA Section 12(b) Export Notification (40 CFR 707, Subpt. D)	Not regulated
CERCLA Hazardous Substance List (40 CFR 302.4)	
Phosphoric acid (CAS 7664-38-2)	Listed
US. OSHA Specifically Regulated Substances (29 CFR 1910.1001-1050)	Not listed
Superfund Amendments and Reauthorization Act of 1986 (SARA)	
Hazard categories	
Immediate Hazard - No	
Delayed Hazard - No	
Fire Hazard - No	
Pressure Hazard - No	
Reactivity Hazard - No	
SARA 302 Extremely hazardous substance	No
SARA 311/312 Hazardous chemical	No
SARA 313 (TRI reporting)	Not regulated
Other federal regulations	
Clean Air Act (CAA) Section 112 Hazardous Air Pollutants (HAPs) List	Not regulated
Clean Air Act (CAA) Section 112(r) Accidental Release Prevention (40 CFR 68.130)	Not regulated
US state regulations	
US state regulations	
US - California Hazardous Substances (Director's): Listed substance	
Phosphoric acid (CAS 7664-38-2)	Listed
US - Illinois Chemical Safety Act: Listed substance	
Phosphoric acid (CAS 7664-38-2)	Listed
US - Louisiana Spill Reporting: Listed substance	
Phosphoric acid (CAS 7664-38-2)	Listed
US - Minnesota Haz Subs: Listed substance	
Crystalline silica (CAS 14808-60-7)	Listed
Phosphoric acid (CAS 7664-38-2)	Listed
Urea (CAS 57-13-6)	Listed
US - New Jersey RTK - Substances: Listed substance	
Crystalline silica (CAS 14808-60-7)	
Phosphoric acid (CAS 7664-38-2)	

US - Texas Effects Screening Levels: Listed substance

Crystalline silica (CAS 14808-60-7)	Listed
Phosphoric acid (CAS 7664-38-2)	Listed
Urea (CAS 57-13-6)	Listed

US. Massachusetts RTK - Substance List

Crystalline silica (CAS 14808-60-7)

Phosphoric acid (CAS 7664-38-2)

US. New Jersey Worker and Community Right-to-Know Act Not regulated

US. Pennsylvania Worker and Community Right-to-Know Law

Crystalline silica (CAS 14808-60-7)

Phosphoric acid (CAS 7664-38-2)

US. Rhode Island RTK

Phosphoric acid (CAS 7664-38-2)

US. California Proposition 65

WARNING: This product contains a chemical known to the State of California to cause cancer.

US - California Proposition 65 - CRT: Listed date/Carcinogenic substance

Crystalline silica (CAS 14808-60-7)	Listed: October 1, 1988

Inventory status

Country(s) or region	Inventory name	On inventory (yes/no)*
Canada	Domestic Substances List (DSL)	Yes
Canada	Non-Domestic Substances List (NDSL)	No
United States & Puerto Rico	Toxic Substances Control Act (TSCA)	Yes

*A “Yes” indicates that all components of this product comply with the inventory requirements administered by the governing country(s).

16. Other Information

Disclaimer

The information in the sheet was written based on the best knowledge and experience currently available. Information contained herein was obtained from sources considered technically accurate and reliable. While every effort has been made to ensure full disclosure of product hazards, in some cases data is not available and is so stated. Since conditions of actual product use are beyond control of the supplier, it is assumed that users of this material have been fully trained according to the requirements of all applicable legislation and regulatory instruments. No warranty, expressed or implied, is made and supplier will not be liable for any losses, injuries or consequential damages which may result from the use of or reliance on any information contained in this document.

NFPA Code (Health: 1) (Flammability: 0) (Reactivity: 0)

Issue Date	22-January-2018
Version #	01
Effective Date	22-January-2018
Prepared by	Manufacturer Personnel

LEGEND	
Severe	4
Serious	3
Moderate	2
Slight	1
Minimal	0

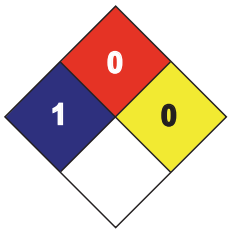

Other Information For an updated SDS, please contact the supplier/manufacturer listed on the first page of the document.

SAFETY DATA SHEET

SECTION 1 PRODUCT AND COMPANY IDENTIFICATION

PRODUCT

Product Name: **MOBIL DTE 10 EXCEL 15**
Product Description: Base Oil and Additives
Product Code: 201560103610, 622605-00, 97AY97
Intended Use: Hydraulic fluid

COMPANY IDENTIFICATION

Supplier: **EXXON MOBIL CORPORATION**
22777 Springwoods Village Parkway
Spring, TX 77389 USA

24 Hour Health Emergency	609-737-4411
Transportation Emergency Phone	800-424-9300 or 703-527-3887 CHEMTREC
Product Technical Information	800-662-4525
MSDS Internet Address	www.exxon.com, www.mobil.com

SECTION 2 HAZARDS IDENTIFICATION

This material is hazardous according to regulatory guidelines (see (M)SDS Section 15).

CLASSIFICATION:

Aspiration toxicant: Category 1.

LABEL:
Pictogram:

Signal Word: Danger

Hazard Statements:
H304: May be fatal if swallowed and enters airways.

Precautionary Statements:
P273: Avoid release to the environment.P301 + P310: IF SWALLOWED: Immediately call a POISON CENTER or doctor/physician. P331: Do NOT induce vomiting.P405: Store locked up.P501: Dispose of contents and container in accordance with local regulations.

Other hazard information:

HAZARD NOT OTHERWISE CLASSIFIED (HNOC): None as defined under 29 CFR 1910.1200.

PHYSICAL / CHEMICAL HAZARDS

No significant hazards.

HEALTH HAZARDS

High-pressure injection under skin may cause serious damage. Frequent or prolonged contact may defat and dry the skin, leading to discomfort and dermatitis. May be irritating to the eyes, nose, throat, and lungs.

ENVIRONMENTAL HAZARDS

Expected to be harmful to aquatic organisms. May cause long-term adverse effects in the aquatic environment.

NFPA Hazard ID:	Health:	1	Flammability:	1	Reactivity:	0
HMIS Hazard ID:	Health:	1*	Flammability:	1	Reactivity:	0

NOTE: This material should not be used for any other purpose than the intended use in Section 1 without expert advice. Health studies have shown that chemical exposure may cause potential human health risks which may vary from person to person.

SECTION 3 COMPOSITION / INFORMATION ON INGREDIENTS

This material is defined as a mixture.

Hazardous Substance(s) or Complex Substance(s) required for disclosure

Name	CAS#	Concentration*	GHS Hazard Codes
2,6-DI-TERT-BUTYLPHENOL	128-39-2	0.1 - < 1%	H315, H400(M factor 1), H410(M factor 1)
ALKYL DITHIOPHOSPHATE	CONFIDENTIAL	0.1 - < 1%	H319(2A), H400(M factor 1), H410(M factor 1)
HYDROTREATED LIGHT PARAFFINIC DISTILLATES, PETROLEUM	64742-55-8	40 - < 50%	H304
SEVERELY HYDROTREATED HEAVY PARAFFINIC DISTILLATE	64742-54-7	40 - < 55%	H304
SOLVENT DEWAXED HEAVY PARAFFINIC DISTILLATE	64742-65-0	1 - < 5%	H304

* All concentrations are percent by weight unless material is a gas. Gas concentrations are in percent by volume.

As per paragraph (i) of 29 CFR 1910.1200, formulation is considered a trade secret and specific chemical identity and exact percentage (concentration) of composition may have been withheld. Specific chemical identity and exact percentage composition will be provided to health professionals, employees, or designated representatives in accordance with applicable provisions of paragraph (i).

SECTION 4 FIRST AID MEASURES

INHALATION

Remove from further exposure. For those providing assistance, avoid exposure to yourself or others. Use adequate respiratory protection. If respiratory irritation, dizziness, nausea, or unconsciousness occurs, seek

immediate medical assistance. If breathing has stopped, assist ventilation with a mechanical device or use mouth-to-mouth resuscitation.

SKIN CONTACT

Wash contact areas with soap and water. Remove contaminated clothing. Launder contaminated clothing before reuse. If product is injected into or under the skin, or into any part of the body, regardless of the appearance of the wound or its size, the individual should be evaluated immediately by a physician as a surgical emergency. Even though initial symptoms from high pressure injection may be minimal or absent, early surgical treatment within the first few hours may significantly reduce the ultimate extent of injury.

EYE CONTACT

Flush thoroughly with water. If irritation occurs, get medical assistance.

INGESTION

Seek immediate medical attention. Do not induce vomiting.

NOTE TO PHYSICIAN

If ingested, material may be aspirated into the lungs and cause chemical pneumonitis. Treat appropriately.

SECTION 5 FIRE FIGHTING MEASURES

EXTINGUISHING MEDIA

Appropriate Extinguishing Media: Use water fog, foam, dry chemical or carbon dioxide (CO2) to extinguish flames.

Inappropriate Extinguishing Media: Straight Streams of Water

FIRE FIGHTING

Fire Fighting Instructions: Evacuate area. Prevent runoff from fire control or dilution from entering streams, sewers, or drinking water supply. Firefighters should use standard protective equipment and in enclosed spaces, self-contained breathing apparatus (SCBA). Use water spray to cool fire exposed surfaces and to protect personnel.

Unusual Fire Hazards: Pressurized mists may form a flammable mixture.

Hazardous Combustion Products: Aldehydes, Incomplete combustion products, Oxides of carbon, Smoke, Fume, Sulfur oxides

FLAMMABILITY PROPERTIES

Flash Point [Method]: >125°C (257°F) [ASTM D-92]
Flammable Limits (Approximate volume % in air): LEL: 0.9 UEL: 7.0
Autoignition Temperature: N/D

SECTION 6 ACCIDENTAL RELEASE MEASURES

NOTIFICATION PROCEDURES

In the event of a spill or accidental release, notify relevant authorities in accordance with all applicable regulations. US regulations require reporting releases of this material to the environment which exceed the applicable reportable quantity or oil spills which could reach any waterway including intermittent dry creeks. The

National Response Center can be reached at (800)424-8802.

PROTECTIVE MEASURES

Avoid contact with spilled material. Warn or evacuate occupants in surrounding and downwind areas if required due to toxicity or flammability of the material. See Section 5 for fire fighting information. See the Hazard Identification Section for Significant Hazards. See Section 4 for First Aid Advice. See Section 8 for advice on the minimum requirements for personal protective equipment. Additional protective measures may be necessary, depending on the specific circumstances and/or the expert judgment of the emergency responders.

For emergency responders: Respiratory protection: respiratory protection will be necessary only in special cases, e.g., formation of mists. Half-face or full-face respirator with filter(s) for dust/organic vapor or Self Contained Breathing Apparatus (SCBA) can be used depending on the size of spill and potential level of exposure. If the exposure cannot be completely characterized or an oxygen deficient atmosphere is possible or anticipated, SCBA is recommended. Work gloves that are resistant to hydrocarbons are recommended. Gloves made of polyvinyl acetate (PVA) are not water-resistant and are not suitable for emergency use. Chemical goggles are recommended if splashes or contact with eyes is possible. Small spills: normal antistatic work clothes are usually adequate. Large spills: full body suit of chemical resistant, antistatic material is recommended.

SPILL MANAGEMENT

Land Spill: Stop leak if you can do it without risk. Recover by pumping or with suitable absorbent.

Water Spill: Stop leak if you can do it without risk. Confine the spill immediately with booms. Warn other shipping. Remove from the surface by skimming or with suitable absorbents. Seek the advice of a specialist before using dispersants.

Water spill and land spill recommendations are based on the most likely spill scenario for this material; however, geographic conditions, wind, temperature, (and in the case of a water spill) wave and current direction and speed may greatly influence the appropriate action to be taken. For this reason, local experts should be consulted. Note: Local regulations may prescribe or limit action to be taken.

ENVIRONMENTAL PRECAUTIONS

Large Spills: Dike far ahead of liquid spill for later recovery and disposal. Prevent entry into waterways, sewers, basements or confined areas.

SECTION 7 HANDLING AND STORAGE

HANDLING

Avoid contact with skin. Prevent small spills and leakage to avoid slip hazard. Material can accumulate static charges which may cause an electrical spark (ignition source). When the material is handled in bulk, an electrical spark could ignite any flammable vapors from liquids or residues that may be present (e.g., during switch-loading operations). Use proper bonding and/or ground procedures. However, bonding and grounds may not eliminate the hazard from static accumulation. Consult local applicable standards for guidance. Additional references include American Petroleum Institute 2003 (Protection Against Ignitions Arising out of Static, Lightning and Stray Currents) or National Fire Protection Agency 77 (Recommended Practice on Static Electricity) or CENELEC CLC/TR 50404 (Electrostatics - Code of practice for the avoidance of hazards due to static electricity).

Static Accumulator: This material is a static accumulator.

STORAGE

The type of container used to store the material may affect static accumulation and dissipation. Do not store in open or unlabelled containers. Keep away from incompatible materials.

SECTION 8 EXPOSURE CONTROLS / PERSONAL PROTECTION

EXPOSURE LIMIT VALUES

Exposure limits/standards (Note: Exposure limits are not additive)

Substance Name	Form	Limit / Standard			NOTE	Source
HYDROTREATED LIGHT PARAFFINIC DISTILLATES, PETROLEUM	Mist.	TWA	5 mg/m3		N/A	OSHA Z1
HYDROTREATED LIGHT PARAFFINIC DISTILLATES, PETROLEUM	Mist.	TWA	5 mg/m3		N/A	ACGIH
SEVERELY HYDROTREATED HEAVY PARAFFINIC DISTILLATE	Mist.	TWA	5 mg/m3		N/A	OSHA Z1
SEVERELY HYDROTREATED HEAVY PARAFFINIC DISTILLATE	Mist.	TWA	5 mg/m3		N/A	ACGIH
SOLVENT DEWAXED HEAVY PARAFFINIC DISTILLATE	Mist.	TWA	5 mg/m3		N/A	OSHA Z1
SOLVENT DEWAXED HEAVY PARAFFINIC DISTILLATE	Mist.	TWA	5 mg/m3		N/A	ACGIH

Exposure limits/standards for materials that can be formed when handling this product: When mists/aerosols can occur the following are recommended: 5 mg/m³ - ACGIH TLV (inhalable fraction), 5 mg/m³ - OSHA PEL.

NOTE: Limits/standards shown for guidance only. Follow applicable regulations.

No biological limits allocated.

ENGINEERING CONTROLS

The level of protection and types of controls necessary will vary depending upon potential exposure conditions. Control measures to consider:

No special requirements under ordinary conditions of use and with adequate ventilation.

PERSONAL PROTECTION

Personal protective equipment selections vary based on potential exposure conditions such as applications, handling practices, concentration and ventilation. Information on the selection of protective equipment for use with this material, as provided below, is based upon intended, normal usage.

Respiratory Protection: If engineering controls do not maintain airborne contaminant concentrations at a level which is adequate to protect worker health, an approved respirator may be appropriate. Respirator selection, use, and maintenance must be in accordance with regulatory requirements, if applicable. Types of respirators to be considered for this material include:

No special requirements under ordinary conditions of use and with adequate ventilation.

For high airborne concentrations, use an approved supplied-air respirator, operated in positive pressure mode.

Supplied air respirators with an escape bottle may be appropriate when oxygen levels are inadequate, gas/vapor warning properties are poor, or if air purifying filter capacity/rating may be exceeded.

Hand Protection: Any specific glove information provided is based on published literature and glove manufacturer data. Glove suitability and breakthrough time will differ depending on the specific use conditions. Contact the glove manufacturer for specific advice on glove selection and breakthrough times for your use conditions. Inspect and replace worn or damaged gloves. The types of gloves to be considered for this material include:

If prolonged or repeated contact is likely, chemical resistant gloves are recommended. If contact with forearms is likely, wear gauntlet style gloves.

Eye Protection: If contact is likely, safety glasses with side shields are recommended.

Skin and Body Protection: Any specific clothing information provided is based on published literature or manufacturer data. The types of clothing to be considered for this material include:

If prolonged or repeated contact is likely, chemical, and oil resistant clothing is recommended.

Specific Hygiene Measures: Always observe good personal hygiene measures, such as washing after handling the material and before eating, drinking, and/or smoking. Routinely wash work clothing and protective equipment to remove contaminants. Discard contaminated clothing and footwear that cannot be cleaned. Practice good housekeeping.

ENVIRONMENTAL CONTROLS

Comply with applicable environmental regulations limiting discharge to air, water and soil. Protect the environment by applying appropriate control measures to prevent or limit emissions.

SECTION 9 PHYSICAL AND CHEMICAL PROPERTIES

Note: Physical and chemical properties are provided for safety, health and environmental considerations only and may not fully represent product specifications. Contact the Supplier for additional information.

GENERAL INFORMATION

Physical State: Liquid
Color: Amber
Odor: Characteristic
Odor Threshold: N/D

IMPORTANT HEALTH, SAFETY, AND ENVIRONMENTAL INFORMATION

Relative Density (at 15 °C): 0.84
Flammability (Solid, Gas): N/A
Flash Point [Method]: >125°C (257°F) [ASTM D-92]
Flammable Limits (Approximate volume % in air): LEL: 0.9 UEL: 7.0
Autoignition Temperature: N/D
Boiling Point / Range: > 232°C (450°F) [Estimated]
Decomposition Temperature: N/D
Vapor Density (Air = 1): > 2 at 101 kPa [Estimated]
Vapor Pressure: < 0.013 kPa (0.1 mm Hg) at 20 °C [Estimated]
Evaporation Rate (n-butyl acetate = 1): N/D
pH: N/A
Log Pow (n-Octanol/Water Partition Coefficient): > 3.5 [Estimated]

Solubility in Water: Negligible
Viscosity: >14 cSt (14 mm2/sec) at 40 °C | 4.05 cSt (4.05 mm2/sec) at 100°C
Oxidizing Properties: See Hazards Identification Section.

OTHER INFORMATION

Freezing Point: N/D
Melting Point: N/A
Pour Point: -51°C (-60°F)
DMSO Extract (mineral oil only), IP-346: < 3 %wt

SECTION 10 STABILITY AND REACTIVITY

REACTIVITY: See sub-sections below.

STABILITY: Material is stable under normal conditions.

CONDITIONS TO AVOID: Excessive heat. High energy sources of ignition.

MATERIALS TO AVOID: Strong oxidizers

HAZARDOUS DECOMPOSITION PRODUCTS: Material does not decompose at ambient temperatures.

POSSIBILITY OF HAZARDOUS REACTIONS: Hazardous polymerization will not occur.

SECTION 11 TOXICOLOGICAL INFORMATION

INFORMATION ON TOXICOLOGICAL EFFECTS

Hazard Class	Conclusion / Remarks
Inhalation	
Acute Toxicity: No end point data for material.	Minimally Toxic. Based on assessment of the components.
Irritation: No end point data for material.	Elevated temperatures or mechanical action may form vapors, mist, or fumes which may be irritating to the eyes, nose, throat, or lungs.
Ingestion	
Acute Toxicity: No end point data for material.	Minimally Toxic. Based on assessment of the components.
Skin	
Acute Toxicity: No end point data for material.	Minimally Toxic. Based on assessment of the components.
Skin Corrosion/Irritation: No end point data for material.	May dry the skin leading to discomfort and dermatitis. Based on assessment of the components.
Eye	
Serious Eye Damage/Irritation: No end point data for material.	May cause mild, short-lasting discomfort to eyes. Based on assessment of the components.
Sensitization	
Respiratory Sensitization: No end point data for material.	Not expected to be a respiratory sensitizer.
Skin Sensitization: No end point data for material.	Not expected to be a skin sensitizer. Based on assessment of the components.
Aspiration: Data available.	May be fatal if swallowed and enters airways. Based on physico-

	chemical properties of the material.
Germ Cell Mutagenicity: No end point data for material.	Not expected to be a germ cell mutagen. Based on assessment of the components.
Carcinogenicity: No end point data for material.	Not expected to cause cancer. Based on assessment of the components.
Reproductive Toxicity: No end point data for material.	Not expected to be a reproductive toxicant. Based on assessment of the components.
Lactation: No end point data for material.	Not expected to cause harm to breast-fed children.
Specific Target Organ Toxicity (STOT)	
Single Exposure: No end point data for material.	Not expected to cause organ damage from a single exposure.
Repeated Exposure: No end point data for material.	Not expected to cause organ damage from prolonged or repeated exposure. Based on assessment of the components.

OTHER INFORMATION

For the product itself:

Repeated and/or prolonged exposure may cause irritation to the skin, eyes, or respiratory tract. Small amounts of liquid aspirated into the lungs during ingestion or from vomiting may cause chemical pneumonitis or pulmonary edema.
Contains:
Base oil severely refined: Not carcinogenic in animal studies. Representative material passes IP-346, Modified Ames test, and/or other screening tests. Dermal and inhalation studies showed minimal effects; lung non-specific infiltration of immune cells, oil deposition and minimal granuloma formation. Not sensitizing in test animals.

The following ingredients are cited on the lists below: None.

--REGULATORY LISTS SEARCHED--

1 = NTP CARC	3 = IARC 1	5 = IARC 2B
2 = NTP SUS	4 = IARC 2A	6 = OSHA CARC

SECTION 12 ECOLOGICAL INFORMATION

The information given is based on data for the material, components of the material, or for similar materials, through the application of bridging principals.

ECOTOXICITY

Material -- Expected to be harmful to aquatic organisms. May cause long-term adverse effects in the aquatic environment.

MOBILITY

Base oil component -- Low solubility and floats and is expected to migrate from water to the land. Expected to partition to sediment and wastewater solids.

PERSISTENCE AND DEGRADABILITY

Biodegradation:

Base oil component -- Expected to be inherently biodegradable

BIOACCUMULATION POTENTIAL

Base oil component -- Has the potential to bioaccumulate, however metabolism or physical properties may reduce the bioconcentration or limit bioavailability.

OTHER ECOLOGICAL INFORMATION

VOC: 13.4 G/L [ASTM E1868-10]

SECTION 13 DISPOSAL CONSIDERATIONS

Disposal recommendations based on material as supplied. Disposal must be in accordance with current applicable laws and regulations, and material characteristics at time of disposal.

DISPOSAL RECOMMENDATIONS

Product is suitable for burning in an enclosed controlled burner for fuel value or disposal by supervised incineration at very high temperatures to prevent formation of undesirable combustion products. Protect the environment. Dispose of used oil at designated sites. Minimize skin contact. Do not mix used oils with solvents, brake fluids or coolants.

REGULATORY DISPOSAL INFORMATION

RCRA Information: The unused product, in our opinion, is not specifically listed by the EPA as a hazardous waste (40 CFR, Part 261D), nor is it formulated to contain materials which are listed as hazardous wastes. It does not exhibit the hazardous characteristics of ignitability, corrosivity or reactivity and is not formulated with contaminants as determined by the Toxicity Characteristic Leaching Procedure (TCLP). However, used product may be regulated.

Empty Container Warning Empty Container Warning (where applicable): Empty containers may contain residue and can be dangerous. Do not attempt to refill or clean containers without proper instructions. Empty drums should be completely drained and safely stored until appropriately reconditioned or disposed. Empty containers should be taken for recycling, recovery, or disposal through suitably qualified or licensed contractor and in accordance with governmental regulations. DO NOT PRESSURISE, CUT, WELD, BRAZE, SOLDER, DRILL, GRIND, OR EXPOSE SUCH CONTAINERS TO HEAT, FLAME, SPARKS, STATIC ELECTRICITY, OR OTHER SOURCES OF IGNITION. THEY MAY EXPLODE AND CAUSE INJURY OR DEATH.

SECTION 14 TRANSPORT INFORMATION

LAND (DOT): Not Regulated for Land Transport

LAND (TDG): Not Regulated for Land Transport

SEA (IMDG): Not Regulated for Sea Transport according to IMDG-Code

Marine Pollutant: No

AIR (IATA): Not Regulated for Air Transport

SECTION 15 REGULATORY INFORMATION

OSHA HAZARD COMMUNICATION STANDARD: This material is considered hazardous in accordance with OSHA HazCom 2012, 29 CFR 1910.1200.

Listed or exempt from listing/notification on the following chemical inventories: AICS, ENCS, KECI, PICCS, TCSI, TSCA

Special Cases:

Inventory	Status
IECSC	Restrictions Apply
NDSL	Restrictions Apply

SARA 302: No chemicals in this material are subject to the reporting requirements of SARA Title III, Section 302

SARA (311/312) REPORTABLE GHS HAZARD CLASSES: Aspiration Hazard

SARA (313) TOXIC RELEASE INVENTORY: This material contains no chemicals subject to the supplier notification requirements of the SARA 313 Toxic Release Program.

The following ingredients are cited on the lists below:

Chemical Name	CAS Number	List Citations
HYDROTREATED LIGHT PARAFFINIC DISTILLATES, PETROLEUM	64742-55-8	1, 4

--REGULATORY LISTS SEARCHED--

1 = ACGIH ALL	6 = TSCA 5a2	11 = CA P65 REPRO	16 = MN RTK
2 = ACGIH A1	7 = TSCA 5e	12 = CA RTK	17 = NJ RTK
3 = ACGIH A2	8 = TSCA 6	13 = IL RTK	18 = PA RTK
4 = OSHA Z	9 = TSCA 12b	14 = LA RTK	19 = RI RTK
5 = TSCA 4	10 = CA P65 CARC	15 = MI 293	

Code key: CARC=Carcinogen; REPRO=Reproductive

SECTION 16 OTHER INFORMATION

N/D = Not determined, N/A = Not applicable

KEY TO THE H-CODES CONTAINED IN SECTION 3 OF THIS DOCUMENT (for information only):
H304: May be fatal if swallowed and enters airways; Aspiration, Cat 1
H315: Causes skin irritation; Skin Corr/Irritation, Cat 2
H319(2A): Causes serious eye irritation; Serious Eye Damage/Irr, Cat 2A
H400: Very toxic to aquatic life; Acute Env Tox, Cat 1
H410: Very toxic to aquatic life with long lasting effects; Chronic Env Tox, Cat 1

THIS SAFETY DATA SHEET CONTAINS THE FOLLOWING REVISIONS:
Composition: Component Table information was modified.
Section 01: Company Mailing Address information was modified.
Section 08: Exposure Limits Table information was modified.
Section 12: information was modified.
Section 15: National Chemical Inventory Listing information was modified.
Section 15: SARA (311/312) REPORTABLE GHS HAZARD CLASSES information was added.
Section 15: SARA (311/312) REPORTABLE HAZARD CATEGORIES information was deleted.
Section 15: Special Cases Table information was modified.

The information and recommendations contained herein are, to the best of ExxonMobil's knowledge and belief, accurate and reliable as of the date issued. You can contact ExxonMobil to insure that this document is the most current available from ExxonMobil. The information and recommendations are offered for the user's consideration and examination. It is the user's responsibility to satisfy itself that the product is suitable for the intended use. If buyer repackages this product, it is the user's responsibility to insure proper health, safety and other necessary information is included with and/or on the container. Appropriate warnings and safe-handling procedures should be provided to handlers and users. Alteration of this document is strictly prohibited. Except to the extent required by law, re-publication or retransmission of this document, in whole or in part, is not permitted. The term, "ExxonMobil" is used for convenience, and may include any one or more of ExxonMobil Chemical Company, Exxon Mobil Corporation, or any affiliates in which they directly or indirectly hold any interest.

Internal Use Only
MHC: 2A, 0B, 0, 0, 1, 1 PPEC: C

DGN: 7086947XUS (1013890)

Copyright 2002 Exxon Mobil Corporation, All rights reserved

SAFETY DATA SHEET

Issuing Date: 11-Nov-2011 **Revision Date: 20-May-2017** **Revision Number: 2**

NGHS/English

The supplier identified below generated this SDS using the UL SDS template. UL did not test, certify, or approve the substance described in this SDS, and all information in this SDS was provided by the supplier or was reproduced from publicly available regulatory data sources. UL makes no representations or warranties regarding the completeness or accuracy of the information in this SDS and disclaims all liability in connection with the use of this information or the substance described in this SDS. The layout, appearance and format of this SDS is © 2014 UL LLC. All rights reserved.

1 IDENTIFICATION

Product identifier

Product Name Mixture

Other means of identification

Product Codes WPS-JLI-055

Synonyms JET-LUBE® CC LUBE™, ILEX CC LUBE™

Recommended use of the chemical and restrictions on use

Recommended Use

Uses advised against

Details of the supplier of the safety data sheet

Supplier Identification Jet Lube of Canada Ltd

Address Jet Lube, LLC
930 Whitmore Drive
Rockwall, Texas USA 75087
TEL: +1-713-670-5700 (8am-5pm CST)

Telephone JLC Office 1.780.463.7441

Toll Free 1.888.771.7775

E-mail Sales@jetlubecanada.com

Emergency telephone number

Company Emergency Phone Number 1-800-699-6318

Emergency Telephone Number CHEMTREC: +1-703-527-3887 (INTERNATIONAL)

1-800-424-9300 (NORTH AMERICA)

2 HAZARDS IDENTIFICATION

Classification

Not classified

Appearance	**Physical state**	**Odor**
Colorless to off-white	Gel	Slight

GHS Label elements, including precautionary statements

Not classified

Precautionary Statements - Prevention

Do not handle until all safety precautions have been read and understood Wear protective gloves/protective clothing/eye protection/face protection.

Precautionary Statements - Response

IF exposed or concerned: Get medical advice/attention

Precautionary Statements - Storage

Store locked up

Precautionary Statements - Disposal

Dispose of contents/container to an approved waste disposal plant.

Other information

May be harmful if swallowed.

Unknown acute toxicity

99.2% of the mixture consists of ingredient(s) of unknown toxicity 0 % of the mixture consists of ingredient(s) of unknown acute oral toxicity.

99.2% of the mixture consists of ingredient(s) of unknown acute dermal toxicity.

99.2% of the mixture consists of ingredient(s) of unknown acute inhalation toxicity (gas).

99.2% of the mixture consists of ingredient(s) of unknown acute inhalation toxicity (vapor).

99.2% of the mixture consists of ingredient(s) of unknown acute inhalation toxicity (dust/mist).

3 Composition/Information on Ingredients

Substance

Not applicable

Mixture

Synonyms JET-LUBE® CC LUBE™, ILEX CC LUBE™

Chemical Name	CAS#	Percent	Hazardous Material Information Review Act registry number (HMIRA registry #)	Date HMIRA filed and date exemption granted (if applicable)
Lubricating greases a complex combination of hydrocarbons having carbon numbers predominantly in the range of C12 through C50. may contain organic salts of alkali metals, alkaline earth metals, etc	74869-21-9	90-100	-	-

4 FIRST AID MEASURES

First aid measures

General advice IF exposed or concerned: Get medical advice/attention.

Inhalation Remove to fresh air.

Eye contact Rinse thoroughly with plenty of water for at least 15 minutes, lifting lower and upper eyelids. Consult a physician.

Skin contact Wash skin with soap and water.

Ingestion Clean mouth with water and drink afterwards plenty of water.

Most important symptoms and effects, both acute and delayed

Symptoms No information available.

Indication of any immediate medical attention and special treatment needed

Note to physicians Treat symptomatically.

5 FIRE-FIGHTING MEASURES

Suitable Extinguishing Media	Use extinguishing measures that are appropriate to local circumstances and the surrounding environment.
Unsuitable extinguishing media	CAUTION: Use of water spray when fighting fire may be inefficient.
Specific hazards arising from the chemical	No information available.
Hazardous Combustion Products	Carbon oxides.
Explosion Data	
Sensitivity to Mechanical Impact	None.
Sensitivity to Static Discharge	None.
Special protective equipment for fire-fighters	Firefighters should wear self-contained breathing apparatus and full firefighting turnout gear. Use personal protection equipment.

6 Accidental Release Measures

Personal precautions, protective equipment and emergency procedures

Personal precautions	Ensure adequate ventilation.
Other Information	Refer to protective measures listed in Section 7 and Section 8.

Environmental precautions

Environmental precautions	Refer Section 12 for additional Ecological Information.

Methods and material for containment and cleaning up

Methods for containment	Prevent further leakage or spillage if safe to do so.
Methods for cleaning up	Dam up. Soak up with inert absorbent material. Pick up and transfer to properly labeled containers.
Prevention of secondary hazards	Clean contaminated objects and areas thoroughly observing environmental regulations.

7 Handling and Storage

Precautions for safe handling

Advice on safe handling	Handle in accordance with good industrial hygiene and safety practice. Avoid contact with skin, eyes or clothing.

Conditions for safe storage, including any incompatibilities

Storage Conditions	Keep containers tightly closed in a dry, cool and well-ventilated place.

8 Exposure Controls/Personal Protection

Control parameters

Exposure Limits	This product, as supplied, does not contain any hazardous materials with occupational exposure limits established by the region specific regulatory bodies.

Appropriate engineering controls

Engineering controls	Showers Eyewash stations Ventilation systems

Individual protection measures, such as personal protective equipment

Eye/face protection	No special protective equipment required.
Hand protection	Wear suitable gloves.
Skin and body protection	Wear suitable protective clothing.
Respiratory protection	No protective equipment is needed under normal use conditions. If exposure limits are exceeded or irritation is experienced, ventilation and evacuation may be required.
General hygiene considerations	Do not eat, drink or smoke when using this product. Wash hands before breaks and immediately after handling the product.

9 Physical and Chemical Properties

Physical and Chemical Properties

Physical state	Gel	
Appearance	Colorless to off-white	
Odor	Slight	
Color	No information available	
Odor Threshold	Not applicable	
Property	**Values**	**Remarks Method**
pH	7	
Melting / freezing point	260 °C	None known
Boiling point / boiling range	316 °C	
Flash Point	> 232 °C	
Evaporation Rate	No data available	None known
Flammability (solid, gas)	No data available	None known
Flammability Limit in Air		None known
Upper flammability limit	No data available	
Lower flammability limit	No data available	
Vapor pressure	No data available	None known
Vapor density	No data available	None known
Relative density	0.876	
Water Solubility	Negligible	
Solubility(ies)	No data available	None known
Partition coefficient: n-octanol/water	Not applicable	
Autoignition temperature	No data available	None known
Decomposition temperature	No data available	None known
Kinematic viscosity	No data available	None known
Dynamic viscosity	No data available	None known
Explosive properties	No information available	
Oxidizing properties	No information available	

Other Information

Softening Point	No information available
Molecular Weight	No information available
VOC Content (%)	None
Liquid Density	No information available
Bulk Density	No information available
Particle Size	No information available
Particle Size Distribution	No information available

10 Stability and Reactivity

Reactivity	No information available.
Chemical stability	Stable under normal conditions.
Possibility of hazardous reactions	None under normal processing.
Hazardous Polymerization	Hazardous polymerization does not occur.
Conditions to avoid	None known based on information supplied.
Incompatible materials	None known based on information supplied.
Hazardous Decomposition Products	Carbon oxides.

11 Toxicological Information

Information on likely routes of exposure

Product Information

Inhalation	Specific test data for the substance or mixture is not available.
Eye contact	Specific test data for the substance or mixture is not available.
Skin contact	Specific test data for the substance or mixture is not available.
Ingestion	Specific test data for the substance or mixture is not available.

Information on toxicological effects

Symptoms No information available.

Numerical measures of toxicity

Acute Toxicity

The following values are calculated based on chapter 3.1 of the GHS document

ATEmix (oral)	2,298.00 mg/kg
Unknown acute toxicity	99.2% of the mixture consists of ingredient(s) of unknown toxicity 0 % of the mixture consists of ingredient(s) of unknown acute oral toxicity. 99.2% of the mixture consists of ingredient(s) of unknown acute dermal toxicity. 99.2% of the mixture consists of ingredient(s) of unknown acute inhalation toxicity (gas). 99.2% of the mixture consists of ingredient(s) of unknown acute inhalation toxicity (vapor). 99.2% of the mixture consists of ingredient(s) of unknown acute inhalation toxicity (dust/mist).

Component Information

Chemical Name	Oral LD50	Dermal LD50	Inhalation LC50
Lubricating greases a complex combination of hydrocarbons having carbon numbers predominantly in the range of C12 through C50. may contain organic salts of alkali metals, alkaline earth metals, etc.	= 2280 mg/kg (Rat)	-	-

Delayed and immediate effects as well as chronic effects from short and long-term exposure

Skin corrosion/irritation	No information available.
Serious eye damage/eye irritation	No information available.
Respiratory or skin sensitization	No information available.

Germ cell mutagenicity	No information available.
Carcinogenicity	Based on available data, the classification criteria are not met.
Reproductive toxicity	No information available.
STOT - single exposure	No information available.
STOT - repeated exposure	No information available.
Aspiration hazard	No information available.

12 Ecological Information

Ecotoxicity

Chemical Name	Toxicity to Algae	Toxicity to Fish	Toxicity to Microorganisms	Daphnia Magna Flea)
Lubricating greases a complex combination of hydrocarbons having carbon numbers predominantly in the range of C12 through C50. may contain organic salts of alkali metals, alkaline earth metals, etc.	>1001 mg/l	96h LC50: > 2000 mg/L (Salmo gairdneri)	-	-

Persistence and Degradability	No information available.
Bioaccumulation	There is no data for this product.
Mobility	No information available.
Other adverse effects	No information available.

13 Disposal Information

Waste treatment methods

Waste from residues/unused products

Dispose of in accordance with local regulations. Dispose of waste in accordance with environmental legislation.

Contaminated packaging Do not reuse empty containers.

14 Transport Information

DOT	NOT REGULATED
Proper Shipping Name	NOT REGULATED
Hazard Class	N/A
TDG	NOT REGULATED
MEX	NOT REGULATED
ICAO	NOT REGULATED
IATA	NOT REGULATED
Proper Shipping Name	NOT REGULATED
IMDG/IMO	NOT REGULATED
RID	NOT REGULATED
ADR	NOT REGULATED
ADN	NOT REGULATED

15 Regulatory Information

Safety, health and environmental regulations/legislation specific for the substance or mixture

International Regulations

Ozone-depleting substances (ODS)	Not applicable
Persistent Organic Pollutants	Not applicable
Export Notification requirements	Not applicable

International Inventories

TSCA	Contact supplier for inventory compliance status.
DSL/NDSL	Complies
EINECS/ELINCS	Complies
ENCS	Not determined
KECL	Complies
PICCS	Complies
AICS	Not determined

Legend

TSCA	United States Toxic Substances Control Act Section 8(b) Inventory
DSL/NDSL	Canadian Domestic Substances List/Non-Domestic Substances List
EINECS/ELINCS	European Inventory of Existing Chemical Substances/European List of Notified Chemical Substances
ENCS	Japan Existing and New Chemical Substances
KECL	Korean Existing and Evaluated Chemical Substances
PICCS	Philippines Inventory of Chemicals and Chemical Substances
AICS	Australian Inventory of Chemical Substances

US Federal Regulations

SARA 313

Section 313 of Title III of the Superfund Amendments and Reauthorization Act of 1986 (SARA). This product does not contain any chemicals which are subject to the reporting requirements of the Act and Title 40 of the Code of Federal Regulations, Part 372.

Acute Health Hazard	No
Chronic Health Hazard	Yes
Fire Hazard	No
Sudden release of pressure hazard	No
Reactive Hazard	No

CWA (Clean Water Act)

This product does not contain any substances regulated as pollutants pursuant to the Clean Water Act (40 CFR 122.21 and 40 CFR 122.42).

CERCLA

This material, as supplied, does not contain any substances regulated as hazardous substances under the Comprehensive Environmental Response Compensation and Liability Act (CERCLA) (40 CFR 302) or the Superfund Amendments and Reauthorization Act (SARA) (40 CFR 355). There may be specific reporting requirements at the local, regional, or state level pertaining to releases of this material.

US State Regulations

California Proposition 65	This product does not contain any Proposition 65 chemicals.
U.S. State Right-to-Know Regulations	This product does not contain any substances above threshold limits that are regulated by state right-to-know.

16 Other Information

NEFA	**Health hazards 0**	**Flammability 1**	**Instability 0**	**Physical and Chemical Properties -**
HMIS	**Health hazards 1**	**Flammability 1**	**Physical hazards 0**	**Personal Protection X**

Prepared by

Product Stewardship
23 British American Blvd.
Latham, NY 12110
1-800-572-6501

Issue Date 11-Nov-2011

Revision Date 20-May-2017

Revision Note Initial Release

Disclaimer

The information provided in this Safety Data Sheet is correct to the best of our knowledge, information and belief at the date of its publication. The information given is designed only as a guidance for safe handling, use, processing, storage, transportation, disposal and release and is not to be considered a warranty or quality specification. The information relates only to the specific material designated and may not be valid for such material used in combination with any other materials or in any process, unless specified in the text.

APPENDIX C

Preliminary Geotechnical Investigation,
Proposed Bar Screen Structure, May 2017

ENVIRONMENTAL
GEOTECHNICAL / CONSTRUCTION MATERIALS TESTING
INFRASTRUCTURE ENGINEERING
MUNICIPAL SERVICES
ASSET MANAGEMENT / CERTIFICATION

PRELIMINARY GEOTECHNICAL INVESTIGATION
CITY OF EL CENTRO
WASTE WATER TREATMENT PLANT
PROPOSED BAR SCREEN STRUCTURE
EL CENTRO, CALIFORNIA

May 3, 2017

NV5 West, Inc.
10592 Avenue of Science, Suite 200
San Diego, California 92128
(858) 385-0500
www.NV5.com

Schneider Electric
10805 Thornmint Road, Suite 140
San Diego, California 92127

May 2, 3017
Project No.: 226816-0000167.00, Phase 04

Attention: Mr. Christopher Klauss, PE

Subject: Preliminary Geotechnical Investigation

Project: Proposed Bar Screen Structure
City of El Centro Waste Water Treatment Plant
El Centro, California

Dear Mr. Klauss:

As requested, NV5 West, Inc. (NV5) is pleased to submit the results of our preliminary geotechnical investigation for the subject project. The purpose of this investigation was to evaluate the subsurface conditions at the City of El Centro Waste Water Treatment Plant's (WWTP) proposed bar screen structure project site for the City of El Centro. From information contained in NV5's Basis of Design Draft Report, it is understood that the proposed bar screen structure will have a footprint of approximately 700 square feet and an approximate depth of 25 feet below the existing surface. The proposed bar screen structure is planned to be located on a relatively flat section of the southeast corner of the WWTP. It is also our understanding that the proposed structure will be reinforced concrete construction. The results of the geotechnical field exploration, laboratory tests, and preliminary geotechnical engineering recommendations and conclusions are presented herewith.

Based on the subsurface exploration, subsequent testing of the subsurface soils, and engineering analyses it was concluded that the construction of the proposed project is geotechnically feasible. The geotechnical information presented herein is intended to assist the project design team in their understanding of the geotechnical factors affecting the proposed project, and the preliminary recommendations, should be incorporated into the project design and implemented construction.

It is recommended that the forthcoming project specifications, in particular the earthwork/compaction sections, be reviewed by NV5 for consistency with our report prior to the bid process in order to avoid possible conflicts, misinterpretations, and inadvertent omissions, etc. It should also be noted that the applicability and final evaluation of recommendations presented herein are contingent upon construction phase field monitoring by NV5 in light of the widely acknowledged importance of geotechnical consultant continuity through the various design, planning and construction stages of a project.

NV5 appreciates the opportunity to provide this geotechnical engineering service for this project and looks forward to continuing our role as your geotechnical engineering consultant.

Respectfully submitted,

NV5 West, Inc.

Gene Custenborder, CEG 1319
Senior Engineering Geologist

Sam Koohi, PhD., PE 85010
Engineering Manager

Reviewed by:

Guillaume Gau, GE 2986
Senior Vice President

GC/SK/GG:ma

Distribution: (3) Addressee, (1) via email
El Centro WWTP Geotechnical Report.doc

TABLE OF CONTENTS

Page

1.0 INTRODUCTION 1
2.0 SCOPE OF SERVICES 1
3.0 SITE AND PROJECT DESCRIPTION 2
4.0 FIELD EXPLORATION 2
5.0 LABORATORY TESTING 3
6.0 GEOLOGY 3
7.0 FAULTING, SEISMICITY AND OTHER GEOLOGIC HAZARDS 4
8.0 CONCLUSIONS 6
9.0 PRELIMINARY RECOMMENDATIONS 6
9.1 EARTHWORK 6
9.2 UTILITY TRENCHING AND TEMPORARY EXCAVATIONS 8
9.3 TRENCH BOTTOM STABILITY 9
9.4 BACKFILL PLACEMENT AND COMPACTION 9
9.5 MAT FOUNDATIONS 9
9.6 FOUNDATIONS FOR ANCILLARY STRUCTURES 10
9.7 LATERAL EARTH PRESSURES 10
9.8 UPLIFT RESISTANCE 11
9.9 SEISMIC DESIGN PARAMETERS 11
9.10 SOIL CORROSION 12
10.0 CONSTRUCTION OBSERVATION AND TESTING 13
11.0 LIMITATIONS 13
12.0 REFERENCES 14

Figures

FIGURE 1 – SITE LOCATION MAP
FIGURE 2 – SITE VICINITY MAP
FIGURE 3 – GEOTECHNICAL MAP
FIGURE 4 – GENERAL GEOLOGIC MAP
FIGURE 5 – REGIONAL FAULT MAP

Appendices

APPENDIX A – LOG OF EXPLORATORY BORING
APPENDIX B – LABORATORY TESTING
APPENDIX C – LIQUEFACTION ANALYSIS
APPENDIX D – TYPICAL EARTHWORK GUIDELINES
APPENDIX E– ASFE INFORMATION ABOUT GEOTECHNICAL REPORT

1.0 INTRODUCTION

This report presents the results of NV5's preliminary geotechnical investigation for the proposed bar screen structure project at the City of El Centro Waste Water Treatment Plant (WWTP) in El Centro, California. The approximate location of the project area is shown in *Figure 1, Site Location Map* and *Figure 2, Site Vicinity Map*. The purpose of this study was to evaluate the subsurface conditions and to provide preliminary geotechnical recommendations for the design and construction of the proposed structure. From information presented in NV5's Basis of Design Draft Report, it is understood that the proposed bar screen structure will have a footprint of approximately 700 square feet and an approximate depth of 25 feet below the existing surface. The structure is planned to be located on a relatively flat section of the southeast corner of the WWTP. It is also our understanding that the proposed structure will be reinforced concrete construction. This report summarizes the data collected and presents our findings, conclusions, and preliminary recommendations.

This report has been prepared for the exclusive use of the client and their consultants to describe the geotechnical factors at the project site which should be considered in the design and construction of the proposed project. In particular, it should be noted that this report has not been prepared from the perspective of a construction bid preparation instrument and should be considered by prospective bidders only as a source of general information subject to interpretation and refinement by their own expertise and experience, particularly with regard to construction feasibility. Contract requirements as set forth by the project plans and specifications will supersede any general observations and specific recommendations presented in this report.

2.0 SCOPE OF SERVICES

The scope of services for this project consisted of the following tasks:

- Review of NV5's Basis of Design Draft Report.
- Review of readily available background data, including in-house geotechnical data, geotechnical literature, geologic maps, topographic maps, seismic hazard maps, and literature relevant to the subject site.
- Dig Alert notification to locate public utilities that may interfere with the proposed exploration location with the site and area.
- A subsurface investigation, including the excavating, logging, and sampling of one exploratory boring located within the project area to a depth of approximately 51.5 feet below the existing ground surface. Soil samples obtained from the boring were transported to NV5's in-house laboratory for observation and testing.
- Laboratory testing of selected soil samples to evaluate their pertinent geotechnical engineering properties.
- An assessment of faulting, seismicity, liquefaction, and other geologic hazards affecting the area and possible impacts on the subject project.

- Engineering evaluation of the geotechnical data collected to develop geotechnical recommendations for the design and construction of the proposed project.

- Preparation of this report, including reference maps and graphics, summarizing the data collected and presenting our findings, conclusions, and geotechnical recommendations for the design and construction of the proposed project.

3.0 SITE AND PROJECT DESCRIPTION

The proposed structure and associated equipment site is planned to be located in the southeast corner of the WWTP approximately 350 feet southeast of the existing Administration Building (refer to *Figure 3, Geotechnical Map*). The site is relatively level at an elevation of approximately 47 feet below mean sea level. It is understood that the proposed structure will have a footprint of approximately 700 square feet and an approximate depth of 25 feet below the existing surface. It is also our understanding that the proposed structure will be reinforced concrete construction.

4.0 FIELD EXPLORATION

As required by law, Underground Service Alert was notified of the location of the exploratory boring prior to drilling. The subsurface conditions were explored by drilling, logging, and sampling one exploratory boring located within the project area to a maximum depth of approximately 51.5 feet below ground surface (bgs). The boring was drilled using a truck-mounted hollow-stem auger drill rig. The drilling services were provided by Pacific Drilling Company of San Diego, California. The approximate location of the exploratory boring is presented on *Figure 3*. Details of the subsurface exploration and log of the exploratory boring are presented in *Appendix A*.

Bulk and relatively undisturbed drive samples of the soils encountered in the borings were obtained in the field during our subsurface investigation. The samples were tagged in the field and transported to our laboratory for observation and testing. The drive samples were obtained using the California Modified Split Spoon and Standard Penetration Test (SPT) samplers, as described below.

California Modified Split Spoon Sampler

The split barrel drive sampler was driven with a 140-pound hammer allowed to drop freely 30 inches in general accordance with ASTM D1587. The number of blows for the last two of three 6-inch intervals were recorded during sampling and are presented in the logs of borings. The sampler has external and internal diameters of approximately 3.0 and 2.4 inches, respectively, and the inside of the sampler is lined with 1-inch-long brass rings. The relatively undisturbed soil samples within the rings were removed, sealed, and transported to the laboratory for observation and testing.

Standard Penetration Test (SPT) Sampler

A split barrel sampler was driven with a 140-pound hammer allowed to drop freely 30 inches in general accordance with ASTM D1586. The numbers of blows for the last two of three 6-inch intervals were recorded during sampling and are presented in the logs of borings (i.e., N-value). The sampler has external and internal diameters of 2.0 and 1.5 inches, respectively. The soil samples obtained in the interior of the barrel were measured, removed, sealed and transported to the laboratory for observation and testing.

5.0 LABORATORY TESTING

Laboratory testing was performed on selected representative bulk and relatively undisturbed soil samples obtained from the exploratory boring to aid in the soil classification and to evaluate the engineering properties of the soil materials encountered. The following tests were performed:

- In-situ moisture content (ASTM D2216)
- Sieve analyses (ASTM D422)
- Maximum Density and Optimum Moisture Content (ASTM D422)
- Atterberg Limits (ASTM D4318)
- Expansion Index (ASTM D4829)
- Corrosivity series including sulfate content, chloride content, pH-value, and resistivity (California Test Methods 417, 422, and 532/643)
- Direct shear (ASTM D3080)

Testing was performed in general accordance with applicable ASTM standards or California Test Methods. The laboratory test results and details of the laboratory-testing program are presented in *Appendix B.*

6.0 GEOLOGY

Geologic Setting - The project site is located in Imperial County in a south-central portion of the Salton Trough, a structural depression within the Colorado Desert geomorphic province. This province is generally a low-lying barren desert basin (in part about 245 feet below sea level) dominated by the Salton Sea. The province is a depressed block between active branches of the San Andreas fault system. The fault branches are buried by recent alluvial deposits. The dominant structural features related to the San Andreas fault system consist of northwest-trending faults and fault zones. The major northwest-trending fault zones include the Imperial fault, the Superstition Hills fault, the Elsinore fault and the San Andreas fault. The province is characterized by the ancient beach lines and silt deposits of extinct Lake Cahuilla.

Geologic Materials - Geologic materials encountered during the subsurface explorations consisted of natural deposits mapped as Quaternary-aged Cahuilla Beds (Qc) on published geologic maps. Minor surficial deposits of fill are also present locally. *Figure 4, General Geologic Map* presents the general distribution of geologic units in the site area. Detailed descriptions of the earth materials encountered are presented on the boring log in *Appendix A.* A description of the geologic materials encountered are provided below:

Groundwater - Groundwater was encountered in the exploratory boring at a depth of approximately 16 feet bgs. Groundwater levels may vary due to seasonal fluctuations and factors such as a substantial increase in surface water infiltration from landscape irrigation, agricultural activity, storage facility leaks or unusually heavy precipitation. There is uncertainty in the accuracy of short-term groundwater level measurements, particularly in fine-grained soil. The groundwater level as reported herein, should not be interpreted to represent an accurate or permanent condition.

7.0 FAULTING, SEISMICITY AND OTHER GEOLOGIC HAZARDS

The principal seismic considerations for most facilities in southern California are damage caused by surface rupturing of fault traces, ground shaking, seismically-induced ground settlement and liquefaction. Potential impacts to the project due to faulting, seismicity and other geologic hazards are discussed in the following sections.

Faulting - The numerous faults in southern California include active, potentially active, and inactive faults. As used in this report, the definitions of fault terms are based on those developed for the Alquist-Priolo Special Studies Zones Act (AP) of 1972 and published by the California Division of Mines and Geology (Hart and Bryant, 2007). Active faults are defined as those that have experienced surface displacement within Holocene time (approximately the last 11,000 years) and/or have been included within any of the state-designated Earthquake Fault Zones (previously known as Alquist-Priolo Special Studies Zones). Faults are considered potentially active if they exhibit evidence of surface displacement since the beginning of Quaternary time (approximately two million years ago) but not since the beginning of Holocene time. Inactive faults are those that have not had surface movement since the beginning of Quaternary time.

Review of geologic maps and literature pertaining to the general site area indicates that the site is not located within a state-designated Earthquake Fault Zone. In addition, there are no known major or active faults mapped or known to cross the project site. Evidence for active faulting at the site was not observed during the subsurface investigation. The relative location of the site to known active faults in the region is depicted on *Figure 5, Regional Fault Map*. The distance from the site to the projection of traces of surface rupture along major active earthquake fault zones, that could affect the site are listed in the following Table 1.

Table 1
Distance From the site to Major Active Faults

Fault	Distance From Site
San Jacinto fault (Superstition Hills section)	1.9 miles
Imperial fault	4.6 miles
Brawley Seismic Zone	6.0 miles
San Jacinto fault	8.4 miles
Elsinore fault (Laguna Salada section)	18.4 miles
Elmore Ranch fault	21.8 miles
Elsinore fault	25.0 miles
San Andreas fault (Coachella section)	37.7 miles
Earthquake Valley fault	51.6 miles
Algodones fault zone	62.4 miles
Burnt Mountain fault	90.4 miles
Eureka Peak fault	90.5 miles
Pinto Mountain fault	91.5 miles
Newport Inglewood-Rose Canyon fault	92.5 miles
Pisgah-Bullion Mountain-Mesquite Lake	94.4 miles
Palos Verdes-Coronado Bank fault	95.9 miles
So. Emerson-Copper Mountain fault	98.9 miles
Calico-Hidalgo fault	99.3 miles

Seismic Shaking - The project site is located in southern California which is considered a seismically active area, and as such, the seismic hazard most likely to impact the site is ground shaking resulting from an earthquake along one of the known active faults in the region. The seismic design of the project may be performed using seismic design recommendations in accordance with the 2013 California Building Code (CBC). Recommended seismic design parameters are presented in *Section 9.9* of this report.

Fault Rupture - The project site is not located within an Earthquake Fault Zone delineated by the State of California for the hazard of fault surface rupture. The surface traces of known active or potentially active faults are not known to pass directly through the site. The Alquist-Prioo (AP) mapped San Jacinto fault zone, Superstition Hills section (Wienert fault), is located approximately 10,000-feet to the northwest and trends towards the Site. However, based on the distance to the mapped trace of the fault and the distance to the other faults in the vicinity of the site, the potential for damage due to ground surface rupture of faults at the project site is considered low.

Liquefaction and Seismically-Induced Settlement – Liquefaction and dynamic settlement of soils can be caused by ground shaking during earthquakes. Research and historical data indicate that loose, relatively clean granular soils are susceptible to liquefaction and dynamic settlement, whereas the stability of the majority of clayey silts, silty clays and clays is not adversely affected by ground shaking. Liquefaction is generally known to occur in saturated loose cohesionless soils at depths shallower than approximately 50 feet. The potential for liquefaction under the same conditions of ground shaking intensity and duration will decrease for sands that are more well graded, more irregular and gritty, coarser and denser. Also, a pronounced decrease in liquefaction potential will occur with the increase in fine-grained (i.e., silt and clay) content. Seed and others have suggested that a non-liquefiable classification be assigned if the clay faction is 15 percent or greater (Guidelines for Evaluating and Mitigating Seismic Hazards in California, Special Publication 117, CDMG, Ch. 6, 1997). Dynamic settlement due to earthquake shaking can occur in both dry and saturated sands. The potential consequences of liquefaction to engineered structures include loss of bearing capacity, buoyancy forces on underground structures (including pipelines), increased lateral earth pressures on retaining walls, and lateral spreading.

The site is underlain by a layer of poorly to moderately consolidated sandy clay to clayey sand soils between 10 feet to 30 feet below the existing ground. The subsurface exploration program encountered poorly to moderately consolidated alluvial clay and silt with varying contents of fine sand, along with a relatively shallow ground water table.

Liquefaction analyses were performed based on the liquefaction triggering analysis method proposed by Boulanger and Idriss (2014). Detailed information regarding liquefaction analysis is presented in a published National Center for Earthquake Engineering Research (NCEER) document referenced in *Section 12.0: References*.

Liquefaction analyses were performed utilizing the field and laboratory test data. A peak ground acceleration (PGA) value of 0.5g and an earthquake moment magnitude of Mw=7.0 were used in the analyses. The ground water level (GWL) utilized in the analyses was 10 feet below existing grade (the groundwater during the earthquake). *Appendix C, Liquefaction Analysis*, contains the input data file and a graphical output identifying the potentially liquefiable zones. The magnitude of total liquefaction-induced settlement ranged from 4 to 5 inches. In accordance with industry standards, the accuracy of the above settlements ranges from approximately ± 0.5-inches to ± 1.0-inches. The analysis indicates that the liquefaction-induced settlements would occur within the loose to medium dense sand layers.

Based on our analysis, the bar screen structure may experience about 1-inch of liquefaction induced settlement and ½-inch differential settlement over a distance of 30 feet.

Landslides and Slope Instability - There are no high or steep slopes on or in close proximity to the project site. Based on the investigation, there appears to be no indications of landslides or deep-seated instability at the site.

Subsidence - The site is located in a region of known ground subsidence due to the withdrawal of subsurface fluids. Typically soil subsidence occurs when groundwater (near the surface or in a deep aquifer) is lowered past its historical level. This occurrence results in an increase of effective stress within a soil layer which typically translates into additional soil consolidation. The regional subsidence is due to fluid withdrawal from geothermal production. Due to the depth of the reservoir, the amount of subsidence caused by fluid withdrawal at the site is not expected to create significant differential settlement conditions. Consequently, the potential for damaging localized differential settlement from fluid withdrawal subsidence is considered low.

Tsunamis, Inundation Seiches, and Flooding – The site and surrounding areas are at an approximate elevation of 47 feet below mean sea level, the site is approximately 100 miles from the Gulf of California. Therefore, tsunamis (seismic sea waves) are not considered a hazard at the site.

The site is not located near to or downslope of, any large body of water that could affect the site in the event of an earthquake-induced failure or seiche (oscillation in a body of water due to earthquake shaking).

8.0 CONCLUSIONS

Based on the data obtained from the subsurface exploration, the associated laboratory test results, engineering analyses, and experience with similar site conditions, it is NV5's opinion that construction of the proposed structure and associated improvements are feasible from a geotechnical standpoint.

9.0 PRELIMINARY RECOMMENDATIONS

The following preliminary recommendations are provided so that the project design team is aware of the geotechnical factors that should be incorporated into the project design and implemented during construction. Recommendations are included for buried, partially buried or at-grade alternatives.

9.1 Earthwork

Site grading should be performed in accordance with the following recommendations and the *Typical Earthwork Guidelines* provided in *Appendix D*. In the event of conflict, the recommendations presented herein supersede those of *Appendix D*.

- Clearing and Grubbing - Prior to grading, the project area should be cleared of all significant surface vegetation, demolition rubble, pond liners, trash, debris, etc. Any buried organic debris or other unsuitable contaminated material encountered during subsequent excavation and grading work should also be removed. Removed material and debris should be properly disposed of offsite. Holes resulting from removal of buried obstruction which extend below finished site grades should be filled with properly compacted soils. Any utilities within the footprint of planned structural improvements should be appropriately abandoned.

- Removal Below Bar Screen Structure – Based on our subsurface exploration, it is anticipated that the on-site soils can be excavated by modern conventional heavy-duty excavating equipment in good operating conditions. We recommend over-excavation of a minimum of 3 feet below the bottom of the structure. We recommend that the bottom of the excavation be backfilled to the bottom of the planned structure with a layer of crushed rock.

- Dewatering - Groundwater was encountered at a depth of approximately 16 feet below the existing ground surface. Groundwater levels may be expected to vary due to seasonal fluctuations and factors such as a substantial increase in surface water infiltration from landscape irrigation, agricultural activity, storage facility leaks or unusually heavy precipitation. Dewatering is anticipated to be necessary for excavation and proposed construction that extends to near or below the groundwater level. Dewatering may be achieved by means of a series of sump pumps in the bottom of the excavation. In any case, the actual means and methods of any dewatering scheme should be established by a contractor with local experience. It is important to note that temporary dewatering, if necessary, will require a permit and plan that complies with RWQCB regulations. If excessive water is encountered, NV5 should be contacted to provide additional recommendations for temporary construction dewatering.

- Removals Below Ancillary Structures – Ancillary structures should be founded entirely on properly compacted fill. A cut-fill transition condition should not be allowed underlying proposed structures. In order to create a uniform bearing condition for ancillary structures the existing soils underlying the proposed structures should be completely excavated to a minimum depth of 5 feet below the finished grade or 3 feet below the bottom of foundation, whichever is deeper. The excavation should extend laterally a distance of at least 5 feet beyond the footprint of the proposed structure. The soils exposed in the bottom of the excavation should be moisture conditioned and uniformly recompacted to at least 90 percent of the soils maximum density (based on ASTM D1557).

- Structural Fill Placement - Areas to receive fill and/or surface improvements should be scarified to a minimum depth of 6 inches, brought to near-optimum moisture conditions, and compacted to at least 90 percent relative compaction, based on laboratory standard ASTM D1557. Fill soils should be brought to near-optimum moisture conditions and compacted in uniform lifts to at least 90 percent relative compaction (ASTM D1557). Rocks with a maximum dimension greater than 4 inches should not be placed in the upper 3 feet of pad grade. The optimum lift thickness to produce a uniformly compacted fill will depend on the size and type of construction equipment used. In general, fill should be placed in uniform lifts not exceeding 8 inches in loose thickness. Placement and compaction of fill should be observed and tested by the geotechnical consultant.

- Paved Areas, Flatwork: - Excavate to a depth of at least 1.0 feet below the proposed or existing subgrade elevation, whichever is greater and replace with non-expansive fill (Expansion Index not exceeding 20) compacted to at least 95 percent relative compaction, based on laboratory standard ASTM D1557. These excavations should extend a horizontal distance of at least 2.0 feet beyond the outside perimeter.

- Import Soils - If import soils are needed, proposed import should be sampled and tested for suitability by NV5 prior to delivery to the site. Imported fill materials should consist of clean granular soils free from vegetation, debris, or rocks larger than 3 inches in maximum dimension. The Expansion Index value should not exceed a maximum of 20 (i.e., essentially non-expansive).

9.2 Utility Trenching and Temporary Excavations

Temporary, shallow excavations with vertical side slopes less than 4 feet high will generally be stable, although there is a potential for localized sloughing; in these soil types vertical excavations greater than 4 feet high should not be attempted without proper shoring to prevent local instabilities. Shoring may be accomplished with hydraulic shores and trench plates, and/or trench boxes, soldier piles and lagging. The actual method of a shoring system should be provided and by a contractor experienced in installing temporary shoring under similar soil conditions and designed by an experienced licensed professional. If soldier piles and lagging are to be used, we should be contacted for additional recommendations.

All trench excavations should be shored in accordance with CalOSHA regulations. For your planning purposes, the native soil materials may be considered a Type C, as defined the current CalOSHA soil classification.

The excavation support system should be designed to resist lateral earth pressures of the soil and hydrostatic pressures. It is common practice for an experienced contractor to design and install any required shoring structure. The preliminary shoring design parameters are provided as follows for reference. The final design of the temporary shoring should be reviewed by the project geotechnical engineer.

For the design of a cantilever soldier piles and lagging shoring system the structure should be designed to resist the lateral earth, water, and surcharge loadings. For the subsurface conditions at this site, the unfactored earth pressure distribution (p in psf) can be calculated as follows:

$$p = K.\gamma.H + Surcharge\ 1$$

Where:

H= height of the excavation

γ = soil unit weight, where for above water ground is 120 pcf, and for below water level is γ'=58 pcf

K_0=0.6 at-rest earth pressures should be assumed for the geotechnical design, where the wall support does not allow lateral displacement

K_a=0.4 active earth pressure should be assumed for the geotechnical design, where the wall support allow for lateral yielding

Surcharge 1: The surcharge for typical construction activities, a minimum of 2 feet equivalent soil surcharge is recommended

Hydrostatic pressures acting below the groundwater table should be considered in shoring designs.

Stockpiled (excavated) materials should be placed no closer to the edge of a trench excavation than a distance defined by a line drawn upward from the bottom of the trench at an inclination of 1(H): 1(V),

but no closer than 4 feet. All trench excavations should be made in accordance with CalOSHA requirements.

9.3 Trench Bottom Stability

The bottom of onsite excavations will likely expose firm sandy clay to clay. These soils should provide a suitable base for construction of pipelines. For the design of flexible conduits, a modulus of soil reaction (E'), of 100 pounds per square inch is recommended.

While groundwater is not anticipated to be encountered in shallow trenches, if these soils become wet or saturated they may be prone to settlement due to construction activities such as placement and compaction of backfill soils. If wet or unusually soft conditions are encountered in the trench bottom, the bottom of the excavations will need to be stabilized. A typical stabilization method includes overexcavation of the soft or saturated soil and replacement with properly compacted fill, gravel or lean concrete to form a "mat" or stable working surface in the bottom of the excavation. There are other acceptable methods that can be implemented to mitigate the presence of compressible soils or unstable trench bottom conditions, and specific recommendations for a particular alternative can be discussed based on the actual construction techniques and conditions encountered.

9.4 Backfill Placement and Compaction

The majority of the on-site soils are suitable for use as backfill material provided they are free of deleterious materials and moisture-conditioned to near optimum moisture conditions. Backfill should be placed in loose lifts not exceeding 8 inches in thickness and compacted to at least 90 percent of the maximum dry density as evaluated by the latest version of ASTM D1557. Trench backfill should be compacted in uniform lifts (not exceeding 6 inches in compacted thickness) by mechanical means to at least 90 percent relative compaction (ASTM D1557). Water jetting should not be used for compaction. Imported backfill should consist of granular, non-expansive soil with an Expansion Index of 20 or less and should not contain any contaminated soil, expansive soil, debris, organic matter, or other deleterious materials. The sand equivalent of the imported material shall be 20 or greater. Import material should be evaluated for suitability by the geotechnical consultant prior to transport to the site.

The upper 12 inches of subgrade soil and all rock base should be compacted to at least 95 percent. The moisture content of the backfill should be maintained within 2 percent of optimum moisture content during compaction. All backfill should be mechanically compacted. Flooding or jetting is not recommended and should not be allowed.

9.5 Mat Foundations

The support for the bar screen structure is available using a mat foundation at an elevation of approximately 25 feet below the existing ground. The mat foundation is designed to distribute the structural and equipment loads evenly. Recommendations for the design and construction of foundation system are presented below.

9.5.1 Design Parameters

The bar screen structure will be supported by a concrete mat foundation at a depth of approximately 25 feet below the existing grade bearing on a minimum of 3 feet of engineered fill. The mat foundation is designed to distribute the structural loads evenly. An allowable bearing

capacity of 3,500 psf should be used for design. The mat foundation should be designed to distribute structural loads evenly. The bearing capacity value can be increased by one-third if wind and/or seismic loads are included. The mat foundation should be designed and reinforced in accordance with the recommendations of the structural engineer and should conform to the latest edition of the California Building Code.

9.5.2 Settlement

For preliminary design purposes, the total static settlement for the mat foundation loaded to accordance with the allowable bearing capacities recommended above is estimated to be less than 1 inch. Based on our knowledge of the project, differential static settlements are anticipated to be 0.5 inch or less. We estimate the total settlement (static plus liquefaction) for the structure is estimated to be about 2 inches. The liquefaction-induced settlement can be reduced if the mat foundation is constructed at least 5 feet deeper than current design elevations.

9.5.3 Lateral Loads

Lateral loads may be resisted by friction and by the passive resistance of the supporting soils. A coefficient of friction of 0.30 may be used between foundations and the native soils. The passive earth pressures are provided in Section 9.8 of this report.

9.5.4 Foundation Observation

To verify the presence of satisfactory materials at design elevations, bottom of the excavations should be observed to be clean of loosened soil and debris before placing steel or concrete and probed for soft areas.

9.6 Foundations for Ancillary Structures

A shallow foundation system may be used for support of relatively lightly loaded ancillary structures, such as site walls, light standards, trash enclosures, etc. The foundations for each feature should be supported entirely on compacted fill prepared in accordance with the recommendations in *Section 9.1* of this report.

9.7 Lateral Earth Pressures

The reinforced concrete walls of the bar screen structure should be designed for earth pressures at least equal to those indicated in Table 2. Earth pressures will be influenced by structural design of the walls, condition of wall restraint, and methods of construction. The retaining walls should be designed to resist a triangular distribution of lateral earth pressure plus surcharges from any adjacent loads.

Table 2
Earth Pressure Coefficients

Condition	Equivalent Fluid Density (pcf)
Active (K_a)	50
At-Rest (K_0)	70
Passive (K_p)	300
Dynamic Active (K_{ae})	30

9.8 Uplift Resistance

The weight of structure and foundation, can be used to resist the buoyancy forces experienced by the structure. The unit weight of 150 pcf and 110 pcf can be used for the concrete and soil, respectively in calculating the vertical weight of structure. This value should be reduced by the unit weight of water (62,4 pcf) below the groundwater level. The volume of soil directly above the edge of mat foundation is available to resist the hydrostatic uplift force. As ground water was encountered at 16 feet below the ground surface. The structure should be protected from excessive hydrostatic uplift for times when the structure is empty or if there is not enough dead load available to resist the buoyant force condition. There are various methods of resisting hydrostatic uplift such as extending the edges of mat foundation, using hydrostatic relief system, or increasing the weight of structure.

9.9 Seismic Design Parameters

Preliminary seismic design parameters for the project site were developed as per the guidelines outlined in the 2012/2015 IBC (2008 USGS hazard data) and 2010 ASCE 7-10 Standard (with errata as of April 2013). **NV5 should be contacted to provide revisions to these parameters if other codes are specified.** The seismic design parameters for Site Class "D" were developed using a JAVA ™ application, Java Ground Motion Parameter Calculator available on the USGS website (http://earthquake.usgs.gov). The preliminary seismic design parameters for the project site are presented in Table 3 below.

Table 3
2012 IBC Seismic Design Parameters
And ASCE 7-10 Standard

Parameter	Value[1]
Site Coordinates	32.814413°N[2] 115.579853°W
Site Class; (Section 11.4.2)	D
Mapped Spectral Accelerations for short periods, S_S; (Section 11.4.1)	1.948g
Mapped Spectral Accelerations for 1-sec period, S_1; (Section 11.4.1)	0.715g
Site Coefficient, F_a; (Table 11.4-1)	1.000
Site Coefficient, F_v; (Table 11.4-2)	1.5800
Maximum considered earthquake spectral response acceleration for short periods (MCE_R[3]), S_{MS} adjusted for Site Class (Equation 11.4-1)	1.948g
Maximum considered earthquake spectral response acceleration at 1-sec period (MCE_R), S_{M1} adjusted for Site Class (Equation 11.4-2)	1.073g
Five-percent damped design spectral response acceleration at short periods, S_{DS}; (Equation 11.4-3)	1.299g
Five-percent damped design spectral response acceleration at 1-sec period, S_{D1}; (Equation 11.4-4)	0.715g
Mapped Peak Ground Acceleration[4], PGA_M	0.742g

Notes:
1. Values obtained from the *United Stated Geological Survey (USGS) U.S. Seismic Design Maps* tool, based on 2010 ASCE 7 Standard with March 2013 errata.
2. Latitude and longitude were obtained from Google Earth.
3. MCE_R stands for Risk-Targeted Maximum Considered Earthquake.
4. PGA_M adjusted for site effects as defined by ASCE 7-10 Chapter 11.

Deaggregation analyses performed at the project site was based on the USGS Beta – Unified Hazard tool for an exceedance probability of 2 percent in 50 years. Results of the analysis shows that earthquakes having a mean magnitude of 7.0 occurring at a mean distance of 7 km have the highest contribution to the seismic hazard at the project site.

9.10 Soil Corrosion

Laboratory testing was performed on representative samples of the on-site soils to evaluate pH, minimum resistivity, and chloride and soluble sulfate content. Table 4 presents the results of the corrosivity testing.

Table 4
Corrosivity Test Results

Test Location	Exploratory Boring B1	Exploratory Boring B1
Depth (feet)	0 – 5	40 – 41.5
pH	6.6	6.6
Resistivity (ohm-cm)	100	120
Chloride Content (ppm)	4270	1920
Soluble Sulfate Content (ppm)	1080	430

Based on our experience and various publications including the Caltrans Corrosion Guidelines dated January 2015, the site would be considered "corrosive" due to the sulfate concentration in excess of 2000 ppm, the chloride concentration in excess of 500 ppm and relatively low soil resistivity. Using a type V-High sulfate resistant cement for concrete is recommended due to the high sulfate concentration. It is recommended that a corrosion specialist be contacted to determine if measures are necessary.

10.0 CONSTRUCTION OBSERVATION AND TESTING

Observation and testing of bottom of excavation, the placement and compaction of backfill, subgrade will be important to the performance of the proposed project. Site preparation, removal of unsuitable soils, assessment of imported fill materials, backfill placement, and other earthwork operations should be observed and tested. The substrata exposed during the construction may differ from that encountered in the exploratory borings. Continuous observation by a representative of NV5 during construction allows for evaluation of the soil conditions as they are encountered, and allows the opportunity to recommend appropriate revisions where necessary.

11.0 LIMITATIONS

The recommendations and opinions expressed in this report are based on NV5's review of background documents and on information obtained from field explorations. It should be noted that this study did not evaluate the possible presence of hazardous materials on any portion of the site.

Due to the limited nature of the field explorations, conditions not observed and described in this report may be present on the site. Uncertainties relative to subsurface conditions can be reduced through additional subsurface exploration. Additional subsurface evaluation and laboratory testing can be performed upon request. It should be understood that conditions different from those anticipated in this report may be encountered during construction, and that additional effort may be required to mitigate them.

Site conditions, including groundwater elevation, can change with time as a result of natural processes or the activities of man at the subject site or at nearby sites. Changes to the applicable laws, regulations, codes, and standards of practice may occur as a result of government action or the broadening of knowledge. The findings of this report may, therefore, be invalidated over time, in part or in whole, by changes over which NV5 has no control.

NV5's recommendations for this site are, to a high degree, dependent upon appropriate quality control of construction operations, placement and compaction of backfill, subgrade preparation, etc. Accordingly, the recommendations are made contingent upon the opportunity for NV5 to observe the earthwork operations for the proposed construction. If parties other than NV5 are engaged to provide such services, such parties must be notified that they will be required to assume complete responsibility as the geotechnical engineer of record for the geotechnical phase of the project by concurring with the recommendations in this report and/or by providing alternative recommendations.

This document is intended to be used only in its entirety. No portion of the document, by itself, is designed to completely represent any aspect of the project described herein. NV5 should be contacted if the reader requires additional information or has questions regarding the content, interpretations presented, or completeness of this document.

NV5 has endeavored to perform this geotechnical evaluation using the degree of care and skill ordinarily exercised under similar circumstances by reputable geotechnical professionals with experience in this area in similar soil conditions.

12.0 REFERENCES

ASTM, 2001, Soil and Rock: American Society for Testing and Materials: vol. 4.08 for ASTM test methods D-420 to D-4914; and vol. 4.09 for ASTM test methods D-4943 to highest number.

California Department of Conservation, Division of Mines and Geology, 1997, Guidelines for Evaluation and Mitigation of Seismic Hazards in California: Special Publication 117, 74 pp.

California Department of Conservation, Division of Mines and Geology, 1998, Maps of Known Active Fault Near-Source Zones in California and Adjacent Portions of Nevada: International Conference of Building Officials, dated February, Scale 1 inch = 4 kilometers.

California Geological Survey, Geologic Data Map No. 2; Compilation and Interpretation by: Charles W. Jennings (1977). Updated version by: Carlos Gutierrez, William Bryant, George Saucedo, and Chris Wills. Graphics by: Milind Patel, Ellen Sander, Jim Thompson, Barbara Wanish and Milton Fonseca Plesch, Anndreas et. al., 2007, Community Fault Model (CFM) for Southern California; in the Bulletin of the Seismological Society of America, Vol. 97, No. 6. pp. 1793-1802, dated December.

Diblee, T.W., and Minch, J.A., Geologic Map of the Plaster City & Brawley 15 Minute Quadrangle, Imperial County, California. Dibble Geological Foundation, Diblee Foundation Map DF-406, 2008.

Hart, E.W., and Bryant, W.A., 2007, Fault-Rupture Hazard Zones in California, Alquist-Priolo Earthquake Fault Zoning Act with Index to Earthquake Fault Zone Maps: California Department of Conservation, Division of Mines and Geology Special Publication 42, 38 pp.,

International Conference of Building Officials, 2010 California Building Code: Volume 2.

Ishihara, K., 1985, Stability of Natural Deposits during Earthquakes: Proceedings, 11th International Conference on Soil Mechanics and Foundation Engineering, Volume 1, pp. 321-376.

Jennings, C.W., 1994, Fault Activity Map of California and Adjacent Areas with Locations and Ages of Recent Volcanic Eruptions: California Department of Conservation, Division of Mines and Geology Geologic Data Map No. 6, scale 1:750,000.

Jennings, C.W., and Saucedo, G. J. 1999, Simplified Fault Activity Map of California, Map Sheet 54, (Revised 2003 by Toppozada, T., and Branum, D.).

International Building Code, dated 2010.

United States Geological Survey Professional Paper 1360, Evaluating Earthquake Hazards in the Los Angeles Region – An Earth-Science Perspective, dated 1985.

Youd, T.L. and Idriss, I.M., 2001, Liquefaction Resistance of Soils: Summary report of NCEER 1996 and 1998 NCEER/SF Workshops on Evaluation of Liquefaction Resistance of Soils: Journal of Geotechnical and Geoenvironmental Engineering, dated April, pp. 297-313.

Figures

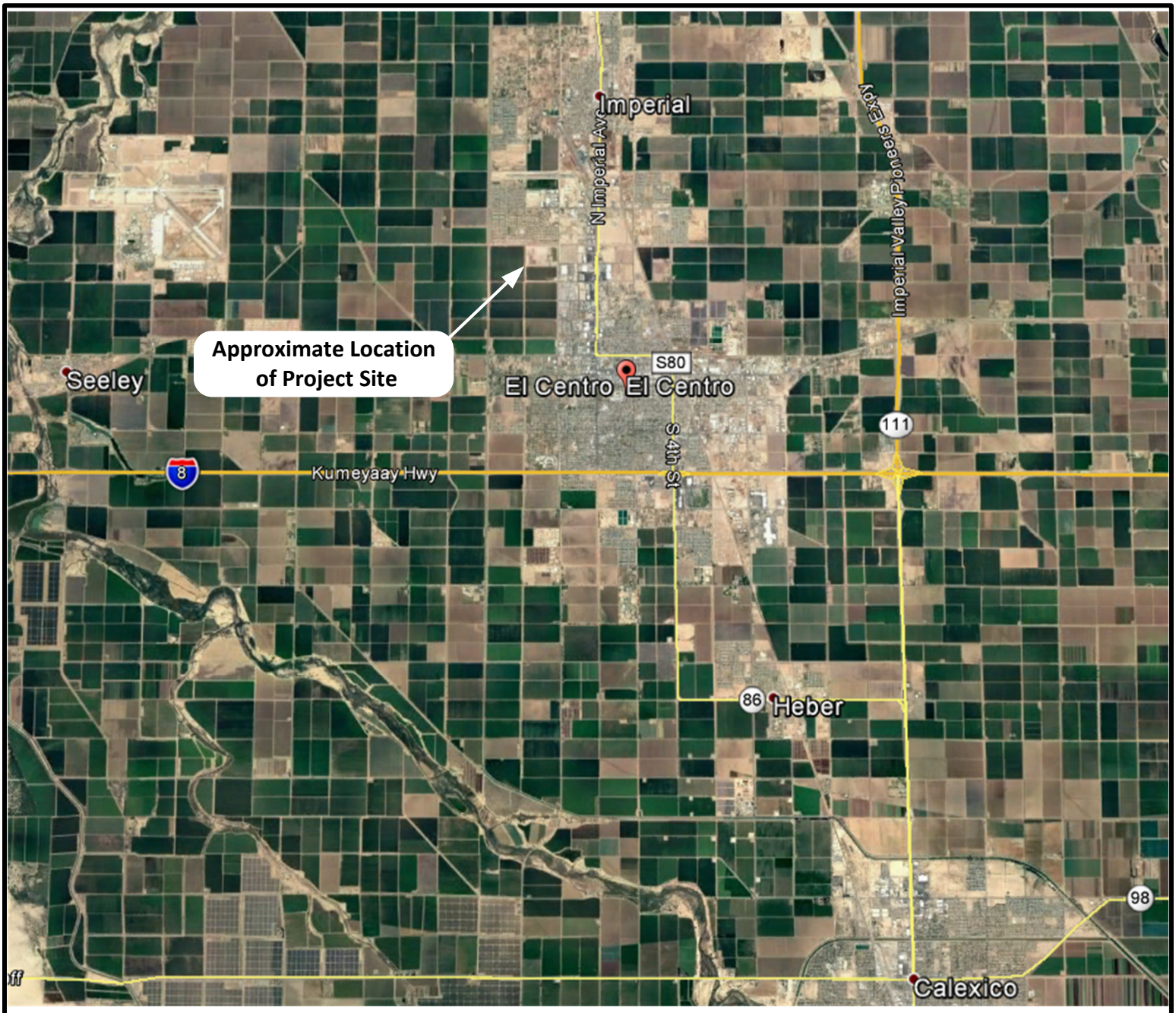

Reference: Google Earth 2016

N

No Scale

NV5
An NV5 West, Inc. Company – Offices Nationwide
10592 Avenue of Science, Suite 200
San Diego, CA
Tel: (858) 385-0500, Fax: (858) 385-0400

Project No: **226816-0000167**
Drawn: **SR**
Date: **March 2017**

Site Location Map
Proposed Bar Screen Structure Project
El Centro Waste Water Treatment Plant
El Centro, California **Figure No. 1**

N

MAP SYMBOLS

B1 — Approximate location of geotechnical boring

Approximate scale in feet

0 200 400 600 800 1000

Reference: Google Earth 2016

NV5
An NV5 West, Inc. Company – Offices Nationwide
10592 Avenue of Science, Suite 200
San Diego, CA
Tel: (858) 385-0500, Fax: (858) 385-0400

Project No: **226816-0000167**
Drawn: **SR**
Date: **March 2017**

Site Vicinity Map
Proposed Bar Screen Structure Project
El Centro Waste Water Treatment Plant
El Centro, California **Figure No. 2**

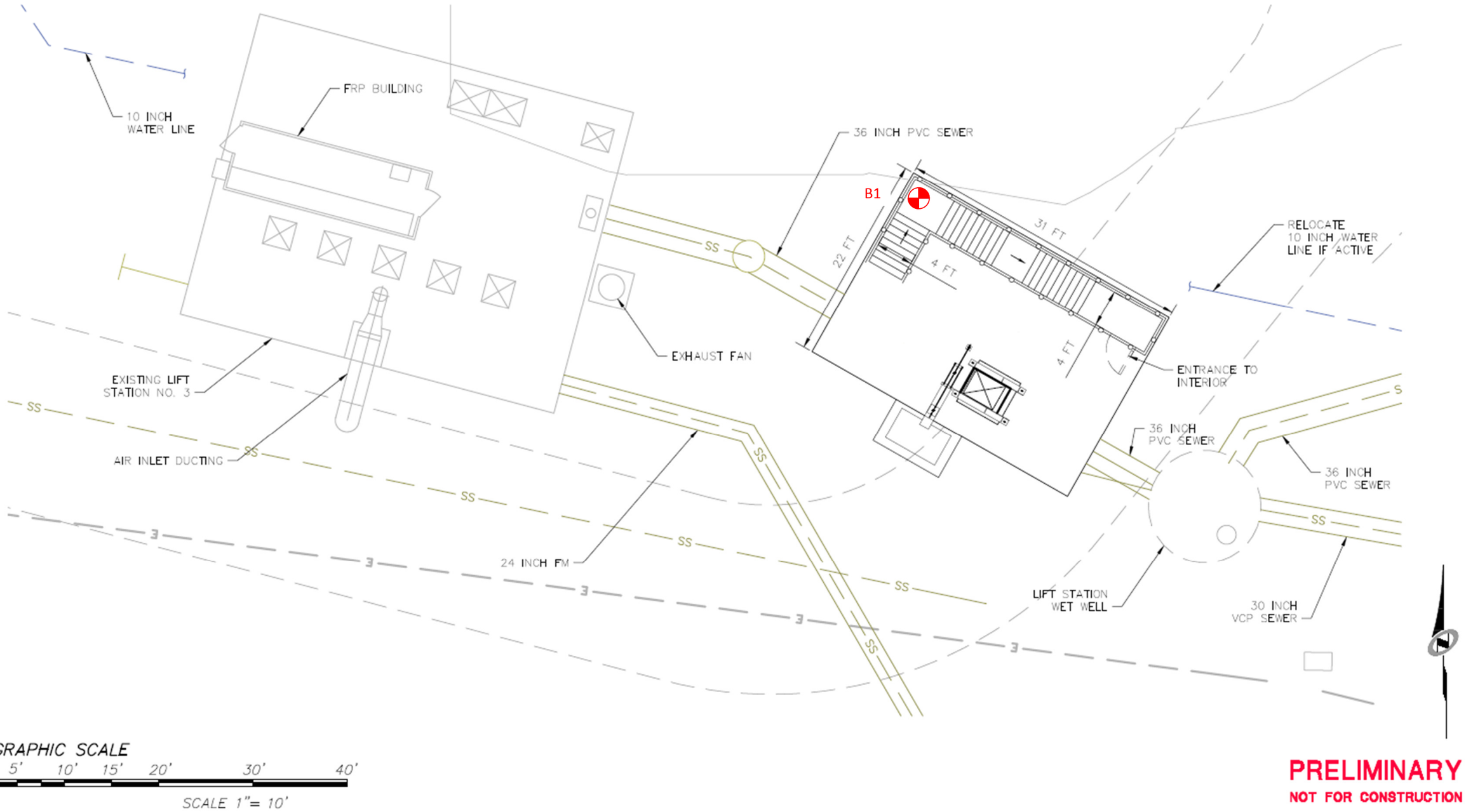

B1 Approximate location of geotechnical boring

NV5
An NV5 West, Inc. Company – Offices Nationwide
10592 Avenue of Science, Suite 200
San Diego, CA
Tel: (858) 385-0500, Fax: (858) 385-0400

Project No: **226816-0000167**
Drawn: **SR**
Date: **March 2017**

Geotechnical Map
Proposed Bar Screen Structure Project
El Centro Waste Water Treatment Plant
El Centro, California **Figure No. 3**

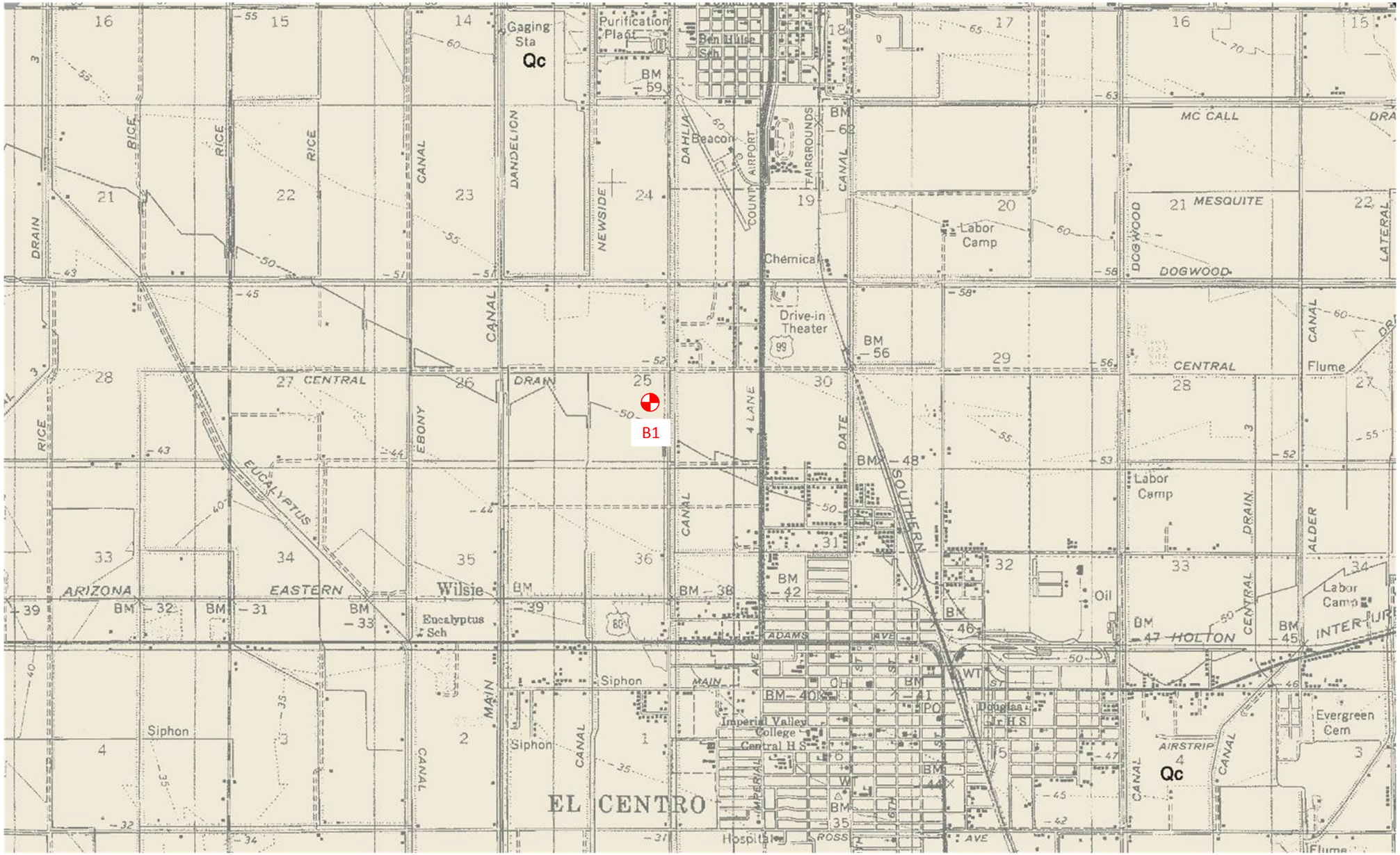

MAP SYMBOLS

Approximate location of geotechnical boring

B1

Approximate Scale in Feet

0 2500 5000 7500 10000 12500

DESCRIPTION OF MAP UNITS

Qc – Cahuilla Beds, thin series of tan-gray claystones, sands, and gravels deposited in former Lake Cahuilla

N

Reference: *Geologic Map of the Plaster City & Brawley 15 Minute Quadrangle, Imperial County, California.* Compiled by Diblee, T.W., and Minch, J.A., 2008. Dibble Geological Foundation, Diblee Foundation Map DF-406.

NV5
An NV5 West, Inc. Company – Offices Nationwide
10592 Avenue of Science, Suite 200
San Diego, CA
Tel: (858) 535-0500, Fax: (858) 385-0400

Project No: 226816-0000167
Drawn: SR
Date: March 2017

General Geologic Map
Proposed Bar Screen Structure Project
El Centro Waste Water Treatment Plant
El Centro, California Figure No. 4

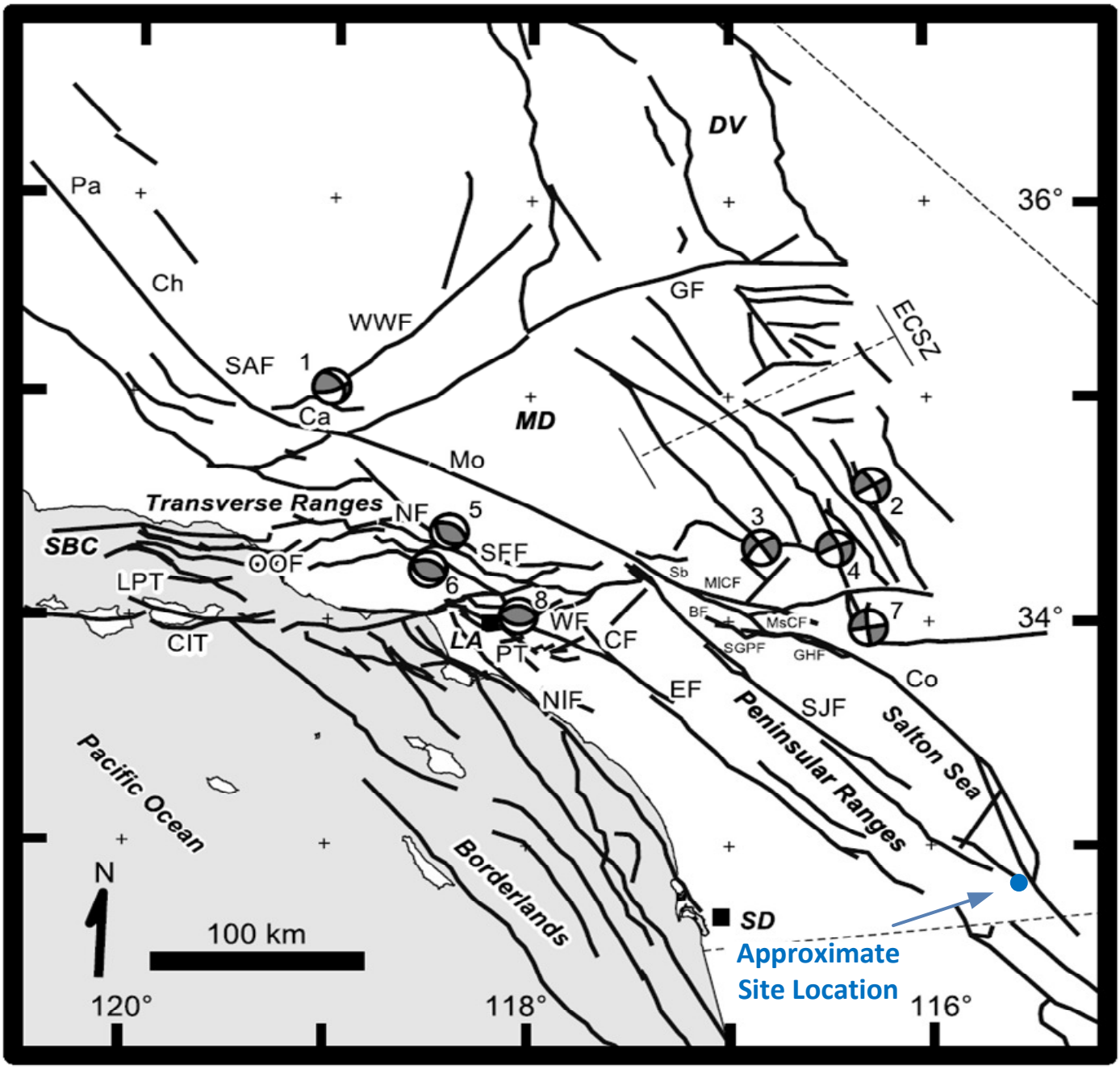

Map of southern California showing the geographic regions, faults and focal mechanisms of the more significant earthquakes. **Regions:** Death Valley, DV; Mojave Desert MD; Los Angeles, LA; Santa Barbara Channel, SBC; and San Diego, SD. **Indicated Faults:** Banning fault, BF; Channel Island thrust, CIT; Chino fault, CF; Eastern California Shear Zone, ECSZ; Elsinore fault, EF; Garlock fault, GF; Garnet Hill fault, GHF; Lower Pitas Point thrust, LPT; Mill Creek fault, MICF; Mission Creek fault, MsCF; Northridge fault, NF; Newport Inglewood fault, NIF; offshore Oak Ridge fault, OOF; Puente Hills thrust, PT; San Andreas fault (sections: Parkfield, Pa; Cholame, Ch; Carrizo; Ca; Mojave, Mo; San Bernardino, Sb; and Coachella, Co); San Fernando fault, SFF; San Gorgonio Pass fault, SGPF; San Jacinto fault, SJF; Whittier fault, WF; and White Wolf fault, WWF. **Earthquake Focal Mechanisms:** 1952 Kern County, 1; 1999 Hector Mine, 2; 1992 Big Bear, 3; 1992 Landers, 4; 1971 San Fernando, 5; 1994 Northridge, 6; 1992 Joshua Tree, 7; and 1987 Whittier Narrows, 8.

Reference: Plesch, Anndreas et. al., 2007, Community Fault Model (CFM) for Southern California; in the *Bulletin of the Seismological Society of America*, Vol. 97, No. 6. pp. 1793-1802, dated December.

For Schematic Use Only-Not a Construction Drawing

NV5
An NV5 West, Inc. Company – Offices Nationwide
10592 Avenue of Science, Suite 200 San Diego, CA
Tel: (858) 385-0500, Fax: (858) 385-0400

Project No: **226816-0000167**
Drawn: **SR**
Date: **March 2017**

Regional Fault Map
Proposed Bar Screen Structure Project
El Centro Waste Water Treatment Plant
El Centro, California
Figure No. 5

Appendix A

Exploratory Boring Log

Log of Exploratory Boring

Bulk and relatively undisturbed drive samples were obtained in the field during our subsurface evaluation. The samples were tagged in the field and transported to our laboratory for observation and testing. The drive samples were obtained using the Standard Penetration Test (SPT) samplers as described below.

California Modified Split Spoon Sampler

The split barrel drive sampler is driven with a 140-pound hammer allowed to drop freely 30 inches in general accordance with ASTM D1587. The number of blows per foot recorded during sampling is presented in the logs of exploratory borings. The sampler has external and internal diameters of approximately 3.0 and 2.4 inches, respectively, and the inside of the sampler is lined with 1-inch-long brass rings. The relatively undisturbed soil sample within the rings is removed, sealed, and transported to the laboratory for observation and testing.

Standard Penetration Test (SPT) Sampler

The split barrel sampler is driven with a 140-pound hammer allowed to drop freely 30 inches in general accordance with ASTM D1586. The number of blows per foot recorded during sampling is presented in the logs of exploratory borings. The sampler has external and internal diameters of 2.0 and 1.5 inches, respectively. The soil sample obtained in the interior of the barrel is measured, removed, sealed and transported to the laboratory for observation and testing.

LOG SYMBOLS:

Bulk/Bag sample

California sampler
(2-1/2 inch outside diameter)

Modified California sampler
(3 inch outside diameter)

Standard penetration
Split spoon sampler
(2 inch outside diameter)

NX size core barrel
(2-5/8 inch outside diameter)

Shelby tube

Water level
(level after completion)

Water level
(level where first encountered)

Abbreviations:

SA - Sieve Analysis
P200 - Percent passing #200 sieve
AL - Atterberg Limits
LL - Liquid limit
DS - Direct shear test
'R' - R-value test
CS - Corrosivity test
EI - UBC expansion index
MD - Laboratory compaction test
CN - Consolidation test

General Notes:

1. Lines separating strata on the logs represent approximate boundaries only. Actual transitions may be gradual.
2. No warranty is provided as to the continuity of soil conditions between individual sample locations.
3. Logs represent general soil conditions observed at the point of exploration on the date indicated.
4. In general, unified soil classification designations presented on the logs were evaluated by visual methods only. Therefore, actual designations (based on laboratory tests) may vary.

Consistency criteria based on field tests

Relative density	SPT* (# blows/ft)	Relative density (%)
Very Loose	<4	0 - 15
Loose	4 - 10	15 - 35
Medium Dense	10 - 30	35 - 65
Dense	30 - 50	65 - 85
Very dense	>50	85 - 100

		Torvane	Pocket** penetrometer
Consistency	SPT (# blows/ft)	Undrained shear strength (tsf)	Unconfined compressive strength
Very soft	<2	<0.13	<0.25
Soft	2 - 4	0.13 - 0.25	0.25 - 0.5
Medium stiff	4 - 8	0.25 - 0.5	0.5 - 1.0
Stiff	8 - 15	0.5 - 1.0	1.0 - 2.0
Very stiff	15 - 30	1.0 - 2.0	2.0 - 4.0
Hard	>30	>2.0	>4.0

* Number of blows of 140 pounds hammer falling 30 inches to drive a 2 inch C.D. (1 3/8" I.D.) split barrel samler (ASTM - 1386 standard penetration test)

** Unconfined compressive strength in Tons/ft^2. Read from pocket penetrometer

Moisture content

Description	Field test
Dry	Absence of moisture, dusty, dry to the touch
Moist	Damp but no visible water
Wet	Visible free water, usually soil is below water table

Cementation

Description	Field test
Weakly	Crumbles or breaks with handling or slight finger pressure
Moderately	Crumbles or breaks with considerable finger pressure
Strongly	Will not crumble or break with finger pressure

NV5
An NV5 West, Inc. Company – Offices Nationwide
15092 Avenue of Science, Suite 200
San Diego, CA 92128
Tel: (858) 385-0500, Fax: (858) 385-0400

Project No: **226816-0000167**
Drawn: **GC**
Date: **April 2017**

Title: **Boring Log Legend**
Project: **EL Centro WWTP Bar Screen Structure**
El Centro, California

Soil Classification Chart

Major Divisions			Symbols: Graph	Symbols: Letter	Typical Descriptions
Coarse Grained Soils	Gravel and Gravelly soils	Clean Gravels (Little or no fines)		GW	Well-Graded Gravel, Gravel SAND mixtures, little of no fines
				GP	Poorly-Graded Gravels, Gravel - SAND mixtures, little or no fines
	more than 50% of coarse fraction retained on No. 4 sieve	Gravels with fines (Appreciable amount of fines)		GM	Silty Gravels, Gravel- SAND-Silt mixture
				GC	Clayey Gravels, Gravel - SAND - Clay mixtures
More than 50& of material is larger than No. 200 sieve size	Sand and Sandy Soils	Clean SANDS (Little or no fines)		SW	Well-Graded SANDS, Gravelly, SANDS, little or no fines
				SP	Poorly - Graded SANDS, Gravelly SAND, little or no fines
	More than 50% of coarse fraction passing on No.4 sieve	Sands with Fines (Appreciable amount of fines)	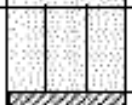	SM	Silty SANDS, SAND-Silt mixtures
				SC	Clayey SANDS, SAND - Clay mixtures
Fine grained soils	Silts and Clays	Liquid Limit less than 50		ML	Inorganic Silts and very fine SANDS, rock flour, Silty or Clayey fine SANDS or clayey Silts with slight Plasticity
				CL	Inorganic Clays of low to medium Plasticity, Gravelly Clays, Sandy Clays, Silty Clays, Lean Clays
				OL	Organic Silts and organic Silty Clays of low Plasticity
More than 50% of material is smaller than No. 200 sieve size	Silts and Clays	Liquid Limit Greater than 50		MH	Inorganic Silts, micaceous or diatomaceous fine SAND or Silty Soils
				CH	Inorganic Clays of high Plasticity
				OH	Organic Clays of medium to High Plasticity, organic Silts
Highly organic soils			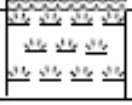	PT	Peat, Humus, swamp soils with High organic contents

NOTE: Dual symbols are used to indicate borderline soil classifications.

NV5
An NV5 West, Inc. Company – Offices Nationwide
15092 Avenue of Science, Suite 200
San Diego, CA 92128
Tel: (858) 385-0500, Fax: (858) 385-0400

Project No: **226816-0000167**
Drawn: **GC**
Date: **April 2017**

Title:
Project:
Soil Classification
El Centro WETP Bar Screen Structure
El Centro, California

N V 5	Project: **Proposed Bar Screen Structure** Project Location: El Centro, California Project Number: 226816-0000167.00	**Boring B1** Sheet 1 of 2

Date(s) Drilled	March 1, 2017	Logged By	Sean Roy	Checked By	Sam Koohi
Drilling Method	Hollow Stem Auger	Boring Diameter	6-inch	Approximate Surface Elevation	47 feet below mean sea level
Drilling Contractor	Pacific Drilling	Sampling Method	California Split Spoon and Standard Penetration Test	Hammer Data	140 pound, auto chain, 30" drop
Drill Rig Type:	Diedrich D50	Location: Bar Screen Structure		Lat. - Long.: 32.814413, -115.579853 (WGS84)	

Depth (ft)	Sample Type	Blows / 6 in. (N)	Sample ID	USCS Class.	MATERIAL DESCRIPTION	Moisture Content %	Dry Weight (pcf)	Other Tests and Remarks
					This log is an integral part of the accompanying report and must be used together with the report for relevant interpretation. The descriptions contained hereon apply only at this boring location and at the time of excavation. Subsurface data are a simplified summary of actual conditions encountered and may vary at other locations and with the passage of time.			
0				CL	Fill CLAY: firm, dark reddish brown, moist, with 3/4-inch gravel and asphalt fragments, micaceous			
5		4 5 6	CAL1	CL	CLAY: firm, dark reddish brown, moist, with 3/4-inch gravel and asphalt fragments, micaceous	23.2	101.7	
10		2 3 4	SPT1	CL	CLAY: firm, dark reddish brown, moist, with 3/4-inch gravel and asphalt fragments, micaceous			
				CL	Native CLAY: firm, dark reddish brown, moist, micaceous			
15		1 1 2	CAL2	SC	Clayey SAND: very loose, reddish brown, wet, very fine-grained, micaceous	25.7	89.3	Groundwater at 16 feet bgs
20		2 4 6	SPT2	SC	Clayey SAND: very loose, reddish brown, wet, very fine-grained, micaceous	29.3		
25		4 9		CL	CLAY: firm, reddish brown, wet, micaceous			
		11	SPT3	SC	Clayey SAND: medium dense, reddish brown, wet, very fine-grained, micaceous	28.9		
30					Increasing silt content, grades to ML			

Sample Type: Cal. Mod. | SPT | Bulk | Other | No Recovery

NV5	Project: **Proposed Bar Screen Structure**	**Boring B1**
	Project Location: El Centro, California	
	Project Number: 226816-0000167.00	Sheet 2 of 2

Date(s) Drilled	March 1, 2017	Logged By	Sean Roy	Checked By	Sam Koohi
Drilling Method	Hollow Stem Auger	Boring Diameter	6-inch	Approximate Surface Elevation	47 feet below mean sea level
Drilling Contractor	Pacific Drilling	Sampling Method	California Split Spoon and Standard Penetration Test	Hammer Data	140 pound, auto chain, 30" drop
Drill Rig Type:	Diedrich D50	Location: Bar Screen Structure		Lat. - Long.: 32.814413, -115.579853 (WGS84)	

Depth (ft)	Sample Type	Blows / 6 in. (N)	Sample ID	USCS Class.	MATERIAL DESCRIPTION This log is an integral part of the accompanying report and must be used together with the report for relevant interpretation. The descriptions contained hereon apply only at this boring location and at the time of excavation. Subsurface data are a simplified summary of actual conditions encountered and may vary at other locations and with the passage of time.	Moisture Content %	Dry Weight (pcf)	Other Tests and Remarks
30		11 17 28	SPT4	SC-SM	Silty-Clayey SAND: very dense, reddish brown, wet, very fine-grained, micaceous	24.5		
35		5 6 12	SPT5	ML CL	CLAY: very stiff, reddish brown, wet, micaceous	28.9		
40		6 8 11	SPT6	CL	CLAY: very stiff, reddish brown, wet, micaceous			
45		7 8 10	SPT7	CL	CLAY: very stiff, reddish brown, wet, micaceous			
50		5 6 8	SPT8	CL	CLAY: stiff, reddish brown, wet, micaceous	28.5		
					Boring terminated at 51.5 feet below ground surface. Groundwater encountered at 16 feet bgs Backfilled with soil cuttings.			
55								
60								

Sample Type: Cal. Mod. | SPT | Bulk | Other | No Recovery

Appendix B

Laboratory Test Results

SUMMARY OF LABORATORY TEST RESULTS

In-situ Moisture and Density Tests

The in-situ moisture contents and dry densities of selected samples obtained from the test borings were evaluated in general accordance with the latest version of D-2216 and D2937 laboratory test methods. The method involves obtaining the moist weight of the sample and then drying the sample to obtain is dry weight. The moisture content is calculated by taking the difference between the wet and dry weights, dividing it by the dry weight of the sample and expressing the result as a percentage. The results of the in-situ moisture content and density tests are presented in the following table.

RESULTS OF MOISTURE CONTENT AND DENSITY TESTS
(ASTM D2216)

Sample Location	Moisture Content (percent)	Dry Density (pounds per cubic foot)
Boring 1 @ 5-10 feet	17.6	-
Boring 1 @ 6-6.5 feet	23.2	102
Boring 1 @ 16-16.5 feet	25.7	89
Boring 1 @ 20-21.5 feet	29.3	88
Boring 1 @ 25-26.5 feet	28.9	-
Boring 1 @ 30-31.5 feet	24.5	-
Boring 1 @ 35-36.5 feet	28.9	-
Boring 1 @ 50-51.5 feet	28.5	-

Classification

Soils were visually and texturally classified in accordance with the Unified Soil Classification System. Soil classifications are indicated on the logs of the exploratory borings in Appendix A.

Particle-size Distribution Tests

An evaluation of the grain-size distribution of selected soil samples was performed in general accordance with the latest version of ASTM D-422 (including –200 wash). These test results were utilized in evaluating the soil classifications in accordance with the Unified Soil Classification System. Particle size distribution test results are presented on the laboratory test sheets attached in this appendix.

Maximum Density

A maximum density test was performed in accordance with ASTM D1557. The results of the test are presented in the following table and attached in this appendix.

Sample Location	B1 @ 0-5ft
Maximum Dry Density	128 pcf
Optimum Moisture	10%

Atterberg Limits

Atterberg limits test was performed in accordance with ASTM D4318. This test was useful in classification of the soil. Test results are attached in this appendix.

Expansion Index

Expansion index test was performed in accordance with ASTM D4829. This test was useful in evaluating the potential expansion of the soil. Test results are attached in this appendix.

Sample Location	B1 @ 10-15ft
Expansion Index	65

Soil Corrosivity Tests

Soluble sulfate, chloride, resistively and pH tests were performed in accordance with California Test Methods 643, 417 and 422 to assess the degree of corrosivity of the subgrade soils with regard to concrete and normal grade steel. The results of the test are presented in the following table and attached in this appendix.

Corrosivity Series Test Results

(CTM 417, 422 and 532/564)

Test Location	Boring B1	Boring B1
Depth (feet)	0 – 5	40 – 41.5
pH	6.6	6.6
Resistivity	100	120
Chloride Content (ppm)	4270	1920
Soluble Sulfate Content (ppm)	1080	430

Direct shear

A direct shear test was performed on a representative undisturbed sample in accordance with ASTM D3080 to evaluate the shear strength characteristics of the on-site materials. The test method consists of placing the soil sample in the direct shear device, applying a series of normal stresses, and then shearing the sample at the constant rate of shearing deformation. The shearing force and horizontal displacements are measured and recorded as the soil specimen is sheared. The shearing is continued well beyond the point of maximum stress until the stress reaches a constant or residual value. The results of the tests are presented in the following table and attached in this appendix.

RESULTS OF DIRECT SHEAR TEST
(ASTM D3080)

Location	**Peak Angle of Internal Friction (degrees)**	**Peak Cohesion Intercept (psf)**	**Notes**
B1, 6-6.5ft	34	142	-
B1, 16-16.5ft	30	0	-

Natural Moisture & Density Report

(ASTM 2216,2937)

Date:	March 10, 2017	Job Number:	226816-0000167.00
Client:	Schneider Electric Company	Report Number:	4824
Address:	10805 Thornmint Road, Suite 140	Lab Number:	113880-113890
	San Diego, CA 92127		
Project:	Proposed Bar Screen Structure		
Project Add:	El Centro, CA		
Sampled By:	Sean Roy		
Date Sampled:	3/01/2017		
Date Rcvd:	3/02/2017		

Lab Number	113880	113881	113883	113884	113885
Exploration No.	B-1	B-1	B-1	B-1	B-1
Depth, ft.	5-10	6-6.5	16-16.5	20-21.5	25-26.5
Moisture Content, %	17.6	23.2	25.7	29.3	28.9
Dry Density, pcf	-	101.7	89.3	-	-

Lab Number	113886	113887	113890
Exploration No.	B-1	B-1	B-1
Depth, ft.	30-31.5	35-36.5	50-51.5
Moisture Content, %	24.5	28.9	28.5
Dry Density, pcf	-	-	-

Respectfully Submitted,
NV5 West, Inc.

Reviewed by: _____

Sam Koohi, PE
Engineering Manager

REPORT OF SIEVE ANALYSIS TEST

ASTM D422 - Soil

Date:	March 13, 2017	Job Number:	226816-0000167.00
Client:	Schneider Electric Company	Report Number:	4824
Address:	10805 Thornmint Road, Suite 140 San Diego, CA 92127	Lab Number:	113887-113889
Project :	El Centro WWTP Upgrades		
Project Address:	El Centro, CA		

	113887	113889				
Material	silty CLAY (CL)	silty CLAY (CL)				
Color	Brown	Brown				
Sample Location	B-1 @ 35'-36'.5"	B-1 @ 45'-46'.5"				
Date Sampled	3/1/2017	3/1/2017				
Date Submitted	3/2/2017	3/2/2017				
Sampled By	Sean Roy	Sean Roy				
Date Tested	3/7/2017	3/7/2017				
Tested By	E.Ocampo	E. Ocampo				

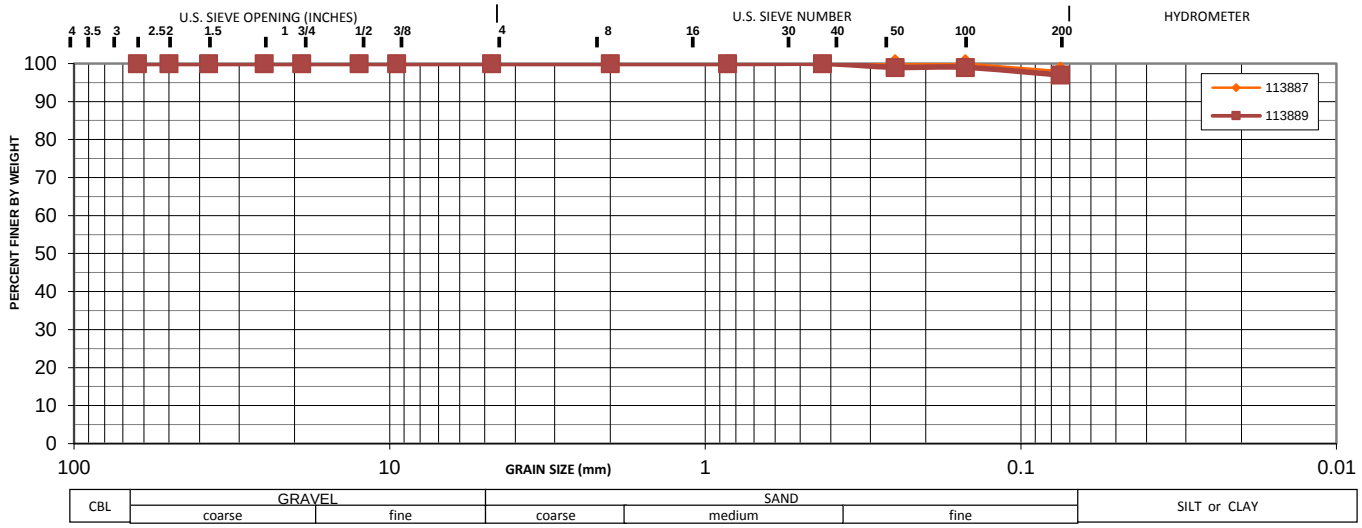

Sample ID:	113887	113889				
Sieve Size	% Passing					
63mm (2 1/2")	100	100				
50mm (2")	100	100				
37.5mm (1 1/2")	100	100				
25mm (1")	100	100				
19mm (3/4")	100	100				
12.5mm (1/2")	100	100				
9.5mm (3/8")	100	100				
4.75mm (#4)	100	100				
2mm (#10)	100	100				
850µm (#20)	100	100				
425µm (#40)	100	100				
250µm (#60)	100	**99**				
150 µm (#100)	100	**99**				
75 um (#200) washµ	**98**	**97**				
Fineness Modulus	0.0	0.0				
Shape (sand & gravel)	N.R.	N.R.				
Hardness (sand & gravel)	N.R.	H&D				
Specific Gravity	2.65	2.65				
Coef. of Curvature (C_C)	0.5	0.5				
Coef. of Uniformity (C_U)	29.3	30.3				
% Gravel	0	0				
% Sand	2	3				
% Fines	98.0	97.0				
USCS Class:	**Silt/Clay**	**Silt/Clay**				

Notes: *Hardness: H&D = Hard & Durable; W&F = Weathered & Friable*
N.R.: Not Recorded; N/A: Not Available.

Respectfully Submitted,
NV5 West, Inc.

Sam Koohi, PE
Engineering Manager

REPORT OF MOISTURE/DENSITY RELATIONSHIP TEST

(ASTM D1557/D698)

Date:	March 13, 2017	Job Number:	226816-0000167
Client:	Schneider Electric Company	Report Number:	4824
Address:	10805 Thornmint Road, Suite 140 San Diego, CA 92127	Lab Number:	113879

Project:	Proposed Bar Screen Structure			
Project Address:	El Centro, CA			
Material:	Brown silty CLAY (CL)	Mold Size:	4	inch
Material Source:	Native			
Location:	B-1 @ 0'-5'	ASTM D1557	A	
Date Sampled:	3/1/2017			
Date Submitted:	3/2/2017			
Sampled By:	Sean Roy			

Maximum Dry Density = 128.0 pcf **Optimum Moisture = 10.0%**

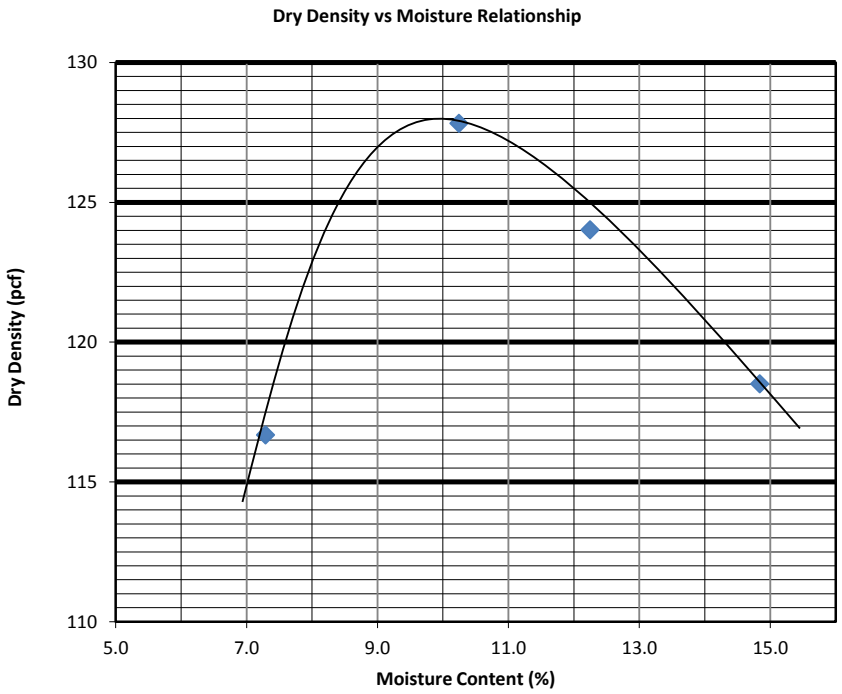

Distribution

Client

File

Reviewed By: _____

Sam Koohi, PE

Engineering Manager

REPORT OF LIQUID LIMIT, PLASTIC LIMIT & PLASTICITY INDEX TESTS

(ASTM 4318)

Date:	March 13, 2017	Job Number:	226816-0000167
Client:	Schneider Electric Company	Report Number:	4824
Address:	10805 Thornmint Road, Suite 140 San Diego, CA 92127	Lab Number:	113887

Project:	Proposed Bar Screen Structure
Project Address:	El Centro, CA
Material:	Brown CLAY (CL)
Location:	B-1 @ 35'-36'.5"
Date Sampled:	3/1/2017
Date Submitted:	3/2/2017
Sampled By:	Sean Roy
Date Tested:	3/7/2017

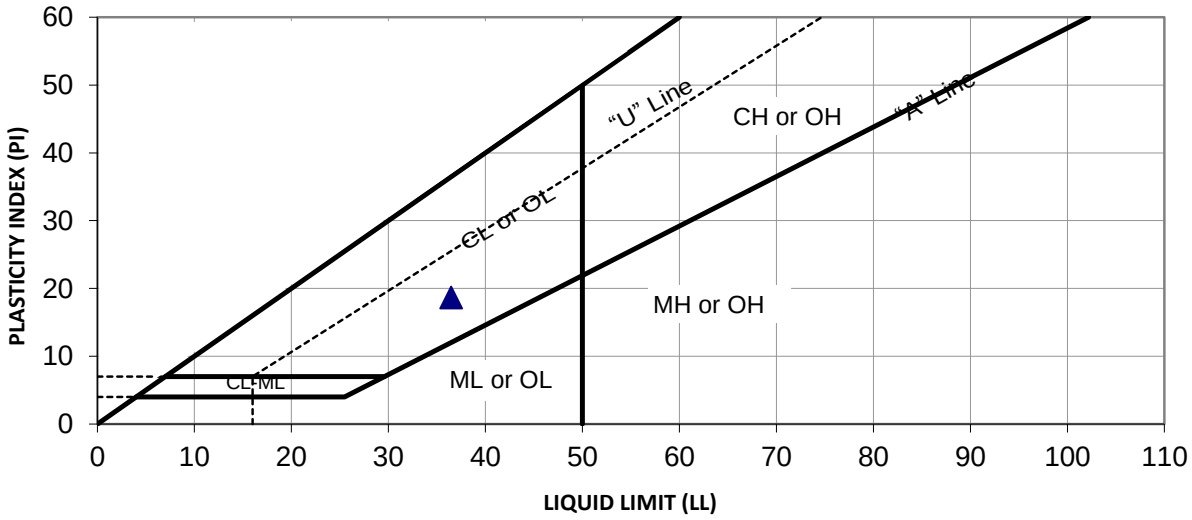

SUMMARY OF TEST RESULTS

SAMPLE ID	SOURCE / LOCATION	DEPTH/ ELEV.	%>#40	TEST RESULT			USCS	
				LL	PL	PI	Class	Group Name
113887	B-1 @ 35'-36'.5"	-	NR	**36**	**18**	**19**	CL	lean CLAY

Reviewed By: _____

Sam Koohi. PE
Engineering Manager

REPORT OF LIQUID LIMIT, PLASTIC LIMIT & PLASTICITY INDEX TESTS

(ASTM 4318)

Date:	March 13, 2017	Job Number:	226816-0000167
Client:	Schneider Electric Company	Report Number:	4824
Address:	10805 Thornmint Road, Suite 140 San Diego, CA 92127	Lab Number:	113889

Project:	Proposed Bar Screen Structure
Project Address:	El Centro, CA
Material:	Brown CLAY (CH)
Location:	B-1 @ 45'-46'.5"
Date Sampled:	3/1/2017
Date Submitted:	3/2/2017
Sampled By:	Sean Roy
Date Tested:	3/7/2017

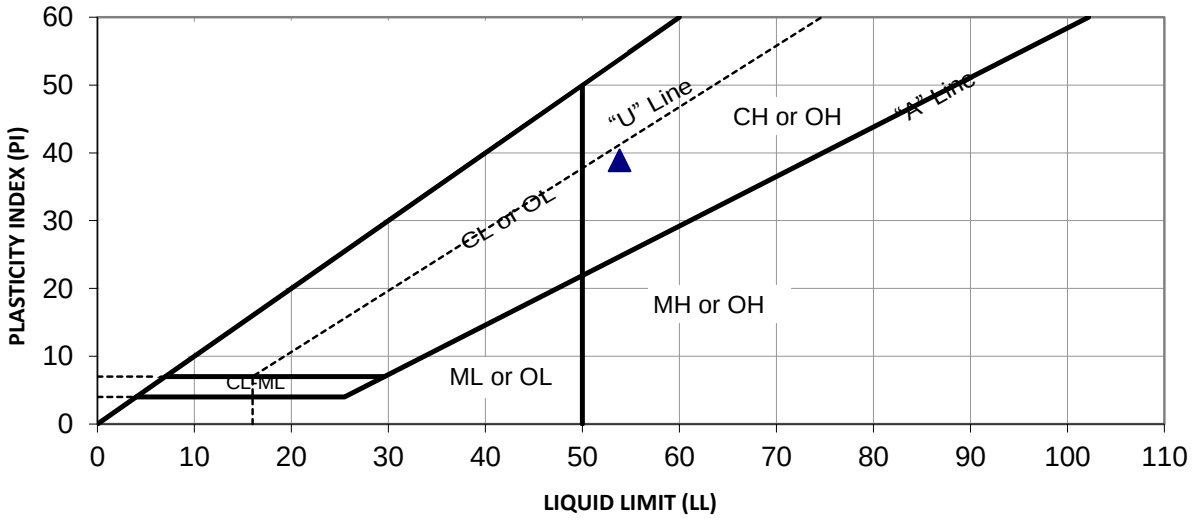

SUMMARY OF TEST RESULTS

SAMPLE ID	SOURCE / LOCATION	DEPTH/ ELEV.	%>#40	TEST RESULT			USCS	
				LL	PL	PI	Class	Group Name
113889	B-1 @ 45'-46'.5"	-	NR	**54**	**15**	**39**	CH	fat CLAY

Reviewed By: _____

Sam Koohi. PE
Engineering Manager

Expansion Index Test Report

(ASTM D4829)

Date:	March 10, 2017	Job Number:	226816-0000167.00
Client:	Schneider Electric Company	Report Number:	4824
Address:	10805 Thornmint Road, Suite 140	Lab Number:	113882
	San Diego, CA 92127		
Project:	Proposed Bar Screen Structure		
Project Add:	El Centro, CA		

Date Sampled:	3/01/17	By:	SR
Type of Material:	Brown silty CLAY (CL)		
Date Submitted:	3/02/17	By:	SR
Source of Material:	On-Site		

Lab Number	113882
Location	B-1 @ 10'-15'
Sample No.	1
Initial Moisture Content, %	12.1
Final Moisture Content, %	23.9
Dry Density, pcf	105.3
Saturation, %	55
Expansion Index	**65**
Potential Expansion	**MEDIUM**

Respectfully Submitted,
NV5 West, Inc.

Sam Koohi, PE
Engineering Manager

L A B O R A T O R Y R E P O R T

Telephone (619) 425-1993 Fax 425-7917 Established 1928

C L A R K S O N L A B O R A T O R Y A N D S U P P L Y I N C.
350 Trousdale Dr. Chula Vista, Ca. 91910 www.clarksonlab.com
A N A L Y T I C A L A N D C O N S U L T I N G C H E M I S T S

Date: March 10, 2017
Purchase Order Number: 17-0397
Sales Order Number: 34893
Account Number: NV5.SD
To:
--
NV5 West Inc
15092 Avenue of Science #200
San Diego, CA 92128
Attention: Michelle Albrecht

Laboratory Number: SO6319-1 Customers Phone: 858-715-5800
Fax: 858-715-5810
Sample Designation:
--
One soil sample received on 03/03/17 at 3:10pm,
from El Centro WWTP Upgrades Job#226816-0000167.00
marked as B1@0'-5' 113879.

Analysis By California Test 643, 1999, Department of Transportation Division of Construction, Method for Estimating the Service Life of Steel Culverts.

pH 6.6

Water Added (ml)	Resistivity (ohm-cm)
10	460
5	210
5	140
5	110
5	100
5	100
5	130
5	150

Less than 5 years to perforation for a 16 gauge metal culvert.
Less than 5 years to perforation for a 14 gauge metal culvert.
Less than 5 years to perforation for a 12 gauge metal culvert.
Less than 5 years to perforation for a 10 gauge metal culvert.
Less than 5 years to perforation for a 8 gauge metal culvert.

Water Soluble Sulfate Calif. Test 417	0.108%	1080ppm
Water Soluble Chloride Calif. Test 422	0.427%	4270ppm

Rosa M. Bernal
RMB/ram

L A B O R A T O R Y R E P O R T

Telephone (619) 425-1993 Fax 425-7917 Established 1928

C L A R K S O N L A B O R A T O R Y A N D S U P P L Y I N C.
350 Trousdale Dr. Chula Vista, Ca. 91910 www.clarksonlab.com
A N A L Y T I C A L A N D C O N S U L T I N G C H E M I S T S

Date: March 10, 2017
Purchase Order Number: 17-0397
Sales Order Number: 34893
Account Number: NV5.SD
To:
--
NV5 West Inc
15092 Avenue of Science #200
San Diego, CA 92128
Attention: Michelle Albrecht

Laboratory Number: SO6319-2 Customers Phone: 858-715-5800
Fax: 858-715-5810
Sample Designation:
--
One soil sample received on 03/03/17 at 3:10pm,
from El Centro WWTP Upgrades Job#226816-0000167.00
marked as B1@40'-41.5'.

Analysis By California Test 643, 1999, Department of Transportation Division of Construction, Method for Estimating the Service Life of Steel Culverts.

pH 6.6

Water Added (ml)	Resistivity (ohm-cm)
10	1600
5	610
5	430
5	230
5	150
5	130
5	120
5	130
5	150

Less than 5 years to perforation for a 16 gauge metal culvert.
Less than 5 years to perforation for a 14 gauge metal culvert.
Less Than 5 years to perforation for a 12 gauge metal culvert.
Less than 5 years to perforation for a 10 gauge metal culvert.
Less than 5 years to perforation for a 8 gauge metal culvert.

Water Soluble Sulfate Calif. Test 417	0.043%	430ppm
Water Soluble Chloride Calif. Test 422	0.192%	1920ppm

Rosa M. Bernal
RMB/ram

DIRECT SHEAR TEST (ASTM D3080)

Project No.	226816-0000167.00	Date:	3/8/2017
Client:	Schneider Electric Company	Report No.:	4824
Proj. Name:	Proposed Bar Screen Structure	Lab No.:	113881
Location:	El Centro, CA	Date Rcvd:	3/2/2017
Sample date:	3/1/2017	Sample Location: 6'-6'.5" Boring No: B-1	Test Date: 3/6/2017

TEST DATA:

	Sample ID:	1 ksf	2 ksf	4 ksf
Initial	Water Content (%)	25.9	23.2	19.0
	Dry Density	99.2	101.9	108.7
	Saturation (%)	106.0	101.8	100.4
Final	Water Content (%)	30.8	24.5	21.5
	Dry Density	99.2	101.9	108.7
	Saturation (%)	126.1	107.7	113.5
Normal Stress (psf)		1000	2000	4000
Ultimate Shear Stress (psf)		807	1241	2909
Peak Shear Stress (psf)		964	1265	2909

Sample Type: Ring

Description: CLAY (CH) w/Pebbles

Color: Brown

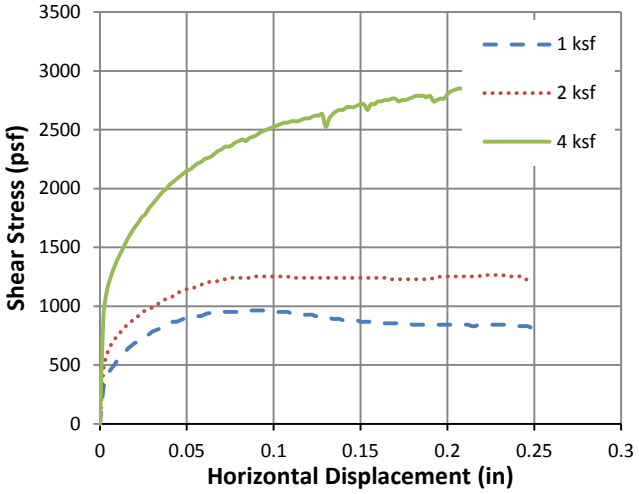

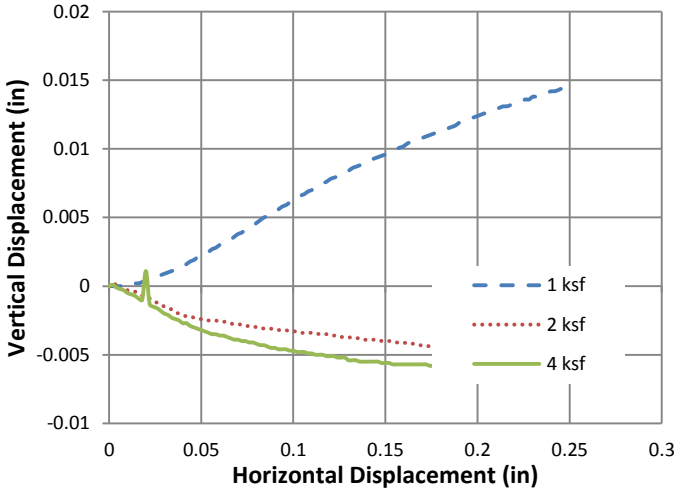

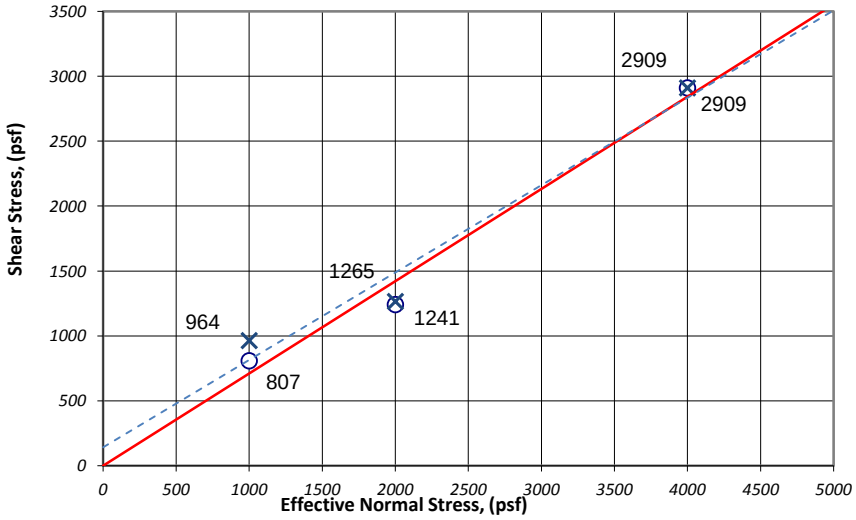

Linear (Ultimate Strength Envelope)

Linear (Peak Strength Envelope)

Peak y = 0.6731x + 142

Ultimate y = 0.7107x

Peak Cohesion, C'(psf): **142**	Ultimate Cohesion, C'(psf): **0**
Peak Friction,Φ' (deg): **34**	Ultimate Friction,Φ' (deg): **35**

NV5
15092 Avenue of Science, Ste 200
San Diego CA 92128
p. 858 385 0500 f. 858 715 5810

Respectfully Submitted,
NV5 West, Inc.

Sam Koohi, PE
Engineering Manager

DIRECT SHEAR TEST (ASTM D3080)

Project No.	226816-0000167.00			Date:	3/13/2017
Client:	Schneider Electric Company			Report No.:	4824
Proj. Name:	Proposed Bar Screen Structure			Lab No.:	113883
Location:	El Centro, CA			Date Rcvd:	3/2/2017
Sample date:	3/1/2017	Sample Location: 16'-16'.5"	Boring No: B-1	Test Date:	3/8/2017

TEST DATA:

	Sample ID:	1 ksf	2 ksf	4 ksf
Initial	Water Content (%)	23.4	25.7	27.1
	Dry Density	92.4	90.3	91.9
	Saturation (%)	80.4	83.8	92.0
Final	Water Content (%)	29.6	29.8	28.6
	Dry Density	92.4	90.3	91.9
	Saturation (%)	102.0	97.1	97.1
Normal Stress (psf)		1000	2000	4000
Ultimate Shear Stress (psf)		565	916	2388
Peak Shear Stress (psf)		565	926	2436

Sample Type: Ring

Description: sandy CLAY (CL)

Color: Brown

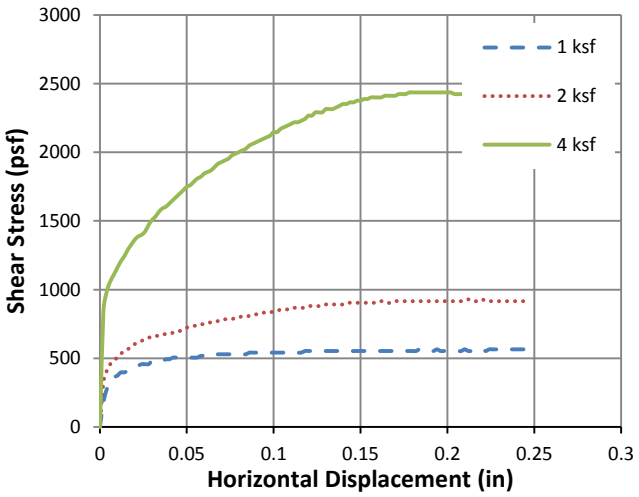

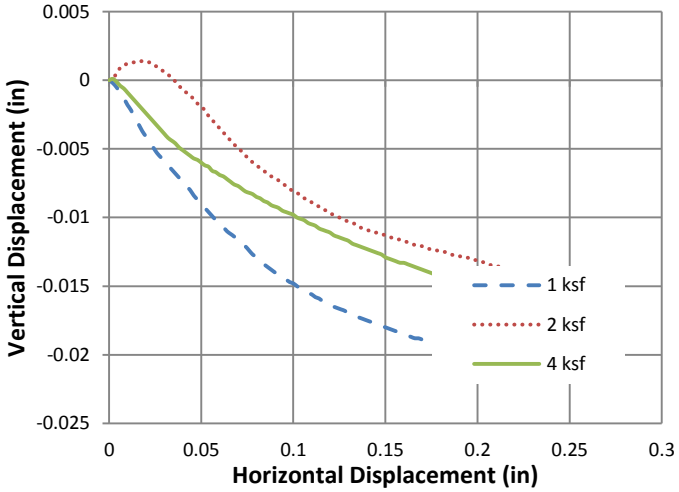

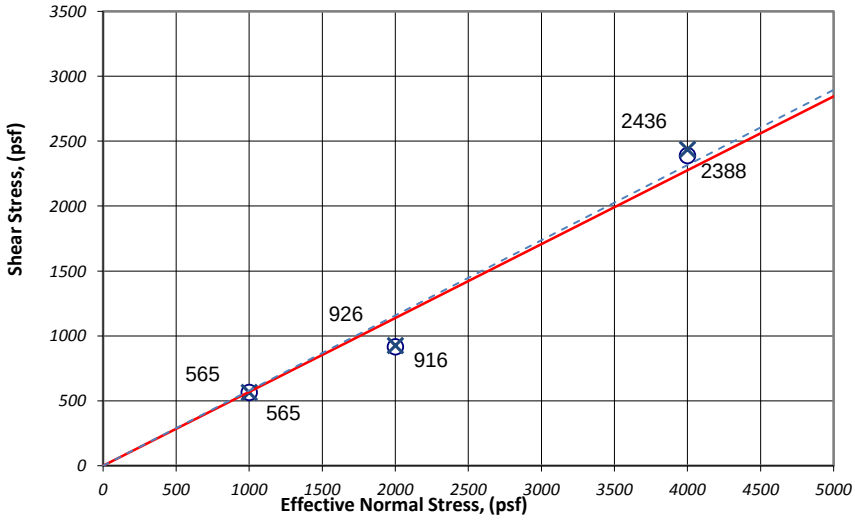

Linear (Ultimate Strength Envelope)

Linear (Peak Strength Envelope)

Peak y = 0.5791x

Ultimate y = 0.569x

Peak Cohesion, C'(psf): **0**	Ultimate Cohesion, C'(psf): **0**
Peak Friction,Φ' (deg): **30**	Ultimate Friction,Φ' (deg): **29**

Respectfully Submitted,

NV5 West, Inc.

NV5
15092 Avenue of Science, Ste 200
San Diego CA 92128
p. 858 385 0500 f. 858 715 5810

Sam Koohi, PE
Engineering Manager

Appendix C

Liquefaction Analysis Results

SIMPLIFIED LIQUEFACTION HAZARDS ASSESSMENT USING STANDARD PENETRATION TEST (SPT) DATA

(Copyright © SPTLIQ Version 6.0, InfraGEO Software, All Rights Reserved)
(Licensed to: NV5 - San Diego, California)

PROJECT INFORMATION

Project Name	El Centro WWTP
Project No.	226816-00000167.00
Project Location	El Centro, CA
Analyzed By	Sam Koohi
Reviewed By	Carlos Amante

SITE CONDITIONS

Boring No.	B-1
Ground Surface Elevation	200.00 feet
Proposed Grade Elevation	200.00 feet
Topographic Site Condition:	TSC1 (Level Ground with No Nearby Free Face)
- Ground Slope, S	0.00 %
- Free Face (L/H) Ratio	N/A
Ave. Total Unit Weight of New Fill	120.00 pcf
GWL Depth Measured During Test	16.00 feet
GWL Depth Used in Design	10.00 feet
Borehole Diameter	6.00 inches
Hammer Weight	140.00 pounds
Hammer Drop	30.00 inches
Hammer Energy Efficiency Ratio, ER	85.00 %
Hammer Distance to Ground Surface	5.00 feet

SEISMIC DESIGN PARAMETERS

Earthquake Moment Magnitude, M_w	7.00
Peak Ground Acceleration, A_{max}	0.50 g
Site to Seismic Source Distance, R	4.00 mi

SUMMARY OF RESULTS

Severity of Liquefaction:

Cumulative Thickness of Liq. Soils, H_{liq}: 15.00 feet (cumulative total thickness in the upper 65 feet)

Liquefaction Potential Index (LPI): 12.69 *** (High risk, with moderate liquefaction effects)

Seismic Settlements:	**Analysis Method**	**Upper 30 feet**	**Upper 50 feet**	**Upper 65 feet**
Seismic Compression Settlement:	Pradel (1998)	0.00 inches	0.00 inches	0.00 inches
Liquefaction-Induced Settlement:	Ishihara and Yoshimine (1992)	3.64 inches	4.28 inches	4.28 inches
Total Seismic Settlement:		3.64 inches	4.28 inches	4.28 inches

Seismic Lateral Displacements:	**Analysis Method**	**Upper 30 feet**	**Upper 50 feet**	**Upper 65 feet**
Cyclic Lateral Displacement:	Tokimatsu and Asaka (1998)	3.82 inches	4.26 inches	4.26 inches
Lateral Spreading Displacement:	Zhang et al. (2004)	0.00 inches	0.00 inches	0.00 inches

NOTES AND REFERENCES

\+ This method of analysis is based on observed seismic performance of level ground sites using correlation with normalized and fines-corrected SPT blow count, $(N_1)_{60cs} = f\{(N_1)_{60}, FC\}$ where $(N_1)_{60} = N_{field}\, C_N\, C_E\, C_B\, C_R\, C_S$

++ Based on criteria for liquefaction susceptibility screening selected by the user.

* FS_{liq} = Factor of Safety against liquefaction = (CRR/CSR), where CRR = $CRR_{7.5}$ MSF K_σ K_α, MSF = Magnitude Scaling Factor, $K_\sigma = f[(N_1)_{60}, \sigma'_{vo}]$, K_α =1.0, (level ground),
CSR = Cyclic Stress Ratio = 0.65 A_{max} $(\sigma_{vo}/\sigma'_{vo})$ r_d, and $CRR_{7.5}$ = Cyclic Resistance Ratio is a function of $(N_1)_{60cs}$ and corrected for an earthquake magnitude M_w of 7.5.

** Residual strength values of liquefied soils are based on correlation with post-earthquake, normalized and fines-corrected SPT blow count derived by Idriss and Boulanger (2008).

*** Based on Iwasaki et al. (1978) and Toprak and Holzer (2003)

+ Reference: Boulanger, R.W. and Idriss, I.M. (2014), "CPT and SPT Based Liquefaction Triggering Procedures," University of California Davis, Center for Geotechnical Modeling Report No. UCD/CGM-14/01, 1-134.

SOIL PROFILE DATA / LIQUEFACTION TRIGGERING ANALYSIS BASED ON R.W. BOULANGER AND I.M. IDRISS (2014) METHOD +

Bottom of Soil Layer Elevation (feet)	Soil Depth During Test (feet)	Material Type USCS Group Symbol (ASTM D2487)	Liquefaction Susceptibility Screening ++ Susceptible Soil? (Y/N)	Total Soil Unit Weight γ_t (pcf)	Field SPT Blow Count N_{field} (blows/ft)	Type of Soil Sampler	Fines Content FC (%)	Total Vert. Stress (Design) σ_{vo} (psf)	Effective Vert. Stress (Design) σ'_{vo} (psf)	SPT Corr. For Vert. Stress C_N	SPT Corr. For Hammer Energy C_E	SPT Corr. For Borehole Size C_B	SPT Corr. For Rod Length C_R	SPT Corr. For Sampling Method C_S	Corrected SPT Blow Count N_{60}	Normalized SPT Blow Count $(N_1)_{60}$	Fines Corrected SPT Blow Count $(N_1)_{60cs}$	Shear Stress Reduction Coefficient r_d	Correction for High Overburden Stress K_σ	Cyclic Stress Ratio CSR	Cyclic Resistance Ratio CRR	Factor of Safety * FS_{liq}	Liquefaction Analysis Results	Residual Shear Strength ** S_r (psf)	Seismic Porewater Pressure Ratio r_u (%)	Cumulative Seismic Settlement (inches)	Cumulative Cyclic Lateral Displacement (inches)	Cumulative Lateral Spreading Displacement (inches)
195.00	2.50	CL	N	125.00		SPT1	100.00	312.50	312.50									1.00		0.32			(NL: Dry Soil)			4.28	4.26	0.00
190.00	7.50	CL	N	125.00	7.00	SPT1	100.00	937.50	937.50									0.98		0.32			(NL: Dry Soil)			4.28	4.26	0.00
185.00	12.50	SC	Y	111.00	3.00	SPT1	35.00	1,527.50	1,371.50	1.18	1.42	1.05	0.85	1.00	3.8	4.5	10.0	0.96	1.03	0.35	0.13	0.36	LIQUEFY	100.57	100.00	4.28	4.26	0.00
180.00	17.50	SC	Y	111.00	10.00	SPT1	35.00	2,082.50	1,614.50	1.01	1.42	1.05	0.95	1.00	14.1	14.3	19.8	0.94	1.02	0.39	0.23	0.57	LIQUEFY	233.81	100.00	2.04	1.86	0.00
175.00	22.50	SC	Y	111.00	20.00	SPT1	35.00	2,637.50	1,857.50	0.96	1.42	1.05	0.95	1.00	28.3	27.1	32.6	0.92	1.01	0.42	0.87	2.05	(NL: Dense Soil)		5.15	0.64	0.72	0.00
170.00	27.50	SC	Y	111.00	45.00	SPT1	35.00	3,192.50	2,100.50	0.96	1.42	1.05	0.95	1.00	63.6	61.2	66.7	0.89	0.99	0.44			(NL: Dense Soil)			0.64	0.43	0.00
165.00	32.50	ML	Y	120.00	18.00	SPT1	60.00	3,770.00	2,366.00	0.88	1.42	1.05	1.00	1.00	26.8	23.5	29.1	0.86	0.97	0.45	0.49	1.10	LIQUEFY	821.99	79.15	0.64	0.43	0.00
160.00	37.50	CL	N	120.00		SPT1	100.00	4,370.00	2,654.00									0.84		0.45			(NL: Clay rich Soil			0.00	0.00	0.00
155.00	42.50	CL	N	120.00		SPT1	100.00	4,970.00	2,942.00									0.81		0.44			(NL: Clay rich Soil			0.00	0.00	0.00
150.00	47.50	CL	N	120.00		SPT1	100.00	5,570.00	3,230.00									0.78		0.44			(NL: Clay rich Soil			0.00	0.00	0.00

SIMPLIFIED LIQUEFACTION HAZARDS ASSESSMENT USING STANDARD PENETRATION TEST (SPT) DATA

(Copyright © SPTLIQ Version 6.0, InfraGEO Software, All Rights Reserved)
(Licensed to: NV5 - San Diego, California)

PROJECT INFORMATION

Project Name	El Centro WWTP
Project No.	226816-00000167.00
Project Location	El Centro, CA
Analyzed By	Sam Koohi
Reviewed By	Carlos Amante

SITE CONDITIONS

Boring No.	B-1
Ground Surface Elevation	200.00 feet
Proposed Grade Elevation	200.00 feet
Topographic Site Condition:	TSC1 (Level Ground with No Nearby Free Face)
- Ground Slope, S	0.00 %
- Free Face (L/H) Ratio	N/A
Ave. Total Unit Weight of New Fill	120.00 pcf
GWL Depth Measured During Test	16.00 feet
GWL Depth Used in Design	10.00 feet
Borehole Diameter	6.00 inches
Hammer Weight	140.00 pounds
Hammer Drop	30.00 inches
Hammer Energy Efficiency Ratio, ER	85.00 %
Hammer Distance to Ground Surface	5.00 feet

SEISMIC DESIGN PARAMETERS

Earthquake Moment Magnitude, M_w	7.00
Peak Ground Acceleration, A_{max}	0.50 g
Site to Seismic Source Distance, R	4.00 mi

SUMMARY OF RESULTS

Severity of Liquefaction:

Cumulative Thickness of Liq. Soils, H_{liq}: 15.00 feet (cumulative total thickness in the upper 65 feet)

Liquefaction Potential Index (LPI): 12.69 *** (High risk, with moderate liquefaction effects)

Seismic Settlements:	**Analysis Method**	**Upper 30 feet**	**Upper 50 feet**	**Upper 65 feet**
Seismic Compression Settlement:	Pradel (1998)	0.00 inches	0.00 inches	0.00 inches
Liquefaction-Induced Settlement:	Ishihara and Yoshimine (1992)	3.64 inches	4.28 inches	4.28 inches
Total Seismic Settlement:		3.64 inches	4.28 inches	4.28 inches

Seismic Lateral Displacements:	**Analysis Method**	**Upper 30 feet**	**Upper 50 feet**	**Upper 65 feet**
Cyclic Lateral Displacement:	Tokimatsu and Asaka (1998)	3.82 inches	4.26 inches	4.26 inches
Lateral Spreading Displacement:	Zhang et al. (2004)	0.00 inches	0.00 inches	0.00 inches

NOTES AND REFERENCES

\+ This method of analysis is based on observed seismic performance of level ground sites using correlation with normalized and fines-corrected SPT blow count, $(N_1)_{60cs} = f\{(N_1)_{60}, FC\}$ where $(N_1)_{60} = N_{field}\, C_N\, C_E\, C_B\, C_R\, C_S$

++ Based on criteria for liquefaction susceptibility screening selected by the user.

* FS_{liq} = Factor of Safety against liquefaction = (CRR/CSR), where $CRR = CRR_{7.5}\, MSF\, K_\sigma\, K_\alpha$, MSF = Magnitude Scaling Factor, $K_\sigma = f[(N_1)_{60}, \sigma'_{vo}]$, K_α =1.0, (level ground), CSR = Cyclic Stress Ratio = $0.65\, A_{max}\, (\sigma_{vo}/\sigma'_{vo})\, r_d$, and $CRR_{7.5}$ = Cyclic Resistance Ratio is a function of $(N_1)_{60cs}$ and corrected for an earthquake magnitude M_w of 7.5.

** Residual strength values of liquefied soils are based on correlation with post-earthquake, normalized and fines-corrected SPT blow count derived by Idriss and Boulanger (2008).

*** Based on Iwasaki et al. (1978) and Toprak and Holzer (2003)

\+ Reference: Boulanger, R.W. and Idriss, I.M. (2014), "CPT and SPT Based Liquefaction Triggering Procedures," University of California Davis, Center for Geotechnical Modeling Report No. UCD/CGM-14/01, 1-134.

SOIL PROFILE DATA / LIQUEFACTION TRIGGERING ANALYSIS BASED ON R.W. BOULANGER AND I.M. IDRISS (2014) METHOD +

Bottom of Soil Layer Elevation	Soil Depth During Test	Material Type USCS Group Symbol (ASTM D2487)	Liquefaction Susceptibility Screening ++ Susceptible Soil? (Y/N)	Total Soil Unit Weight γ_t	Field SPT Blow Count N_{field}	Type of Soil Sampler	Fines Content FC	Total Vert. Stress (Design) σ_{vo}	Effective Vert. Stress (Design) σ'_{vo}	SPT Corr. For Vert. Stress C_N	SPT Corr. For Hammer Energy C_E	SPT Corr. For Borehole Size C_B	SPT Corr. For Rod Length C_R	SPT Corr. For Sampling Method C_S	Corrected SPT Blow Count N_{60}	Normalized SPT Blow Count $(N_1)_{60}$	Fines Corrected SPT Blow Count $(N_1)_{60cs}$	Shear Stress Reduction Coefficient r_d	Correction for High Overburden Stress K_σ	Cyclic Stress Ratio CSR	Cyclic Resistance Ratio CRR	Factor of Safety * FS_{liq}	Liquefaction Analysis Results	Residual Shear Strength ** S_r	Seismic Porewater Pressure Ratio r_u	Cumulative Seismic Settlement	Cumulative Cyclic Lateral Displacement	Cumulative Lateral Spreading Displacement

REFERENCES:

1. Boulanger, R.W. and Idriss, I.M. (2014), "CPT and SPT Based Liquefaction Triggering Procedures," University of California Davis, Center for Geotechnical Modeling Report No. UCD/CGM-14/01, 1-134.
2. Bray, J.D., and Sancio, R.B. (2006). "Assessment of the liquefaction susceptibility of fine-grained soils," Journal of Geotechnical and Geoenvironmental Engineering, ASCE 132 (9), 1165-1177.
3. Cetin, K.O., Bilge, H.T., et al. (2009), "Probabilistic models for cyclic straining of saturated clean sands," Journal of Geotechnical and Geoenvironmental Engineering, ASCE 135 (3), 371-386.
4. Cetin, K.O. and Seed, R.B., et al. (2004), "Standard penetration test-based probabilistic and deterministic assessment of seismic soil liquefaction potential," Journal of Geotechnical and Geoenvironmental Engineering, ASCE 130 (12), 1314-1340.
5. Idriss, I.M. and Boulanger, R.W. (2008), "Soil Liquefaction During Earthquakes", Earthquake Engineering Research Institute (EERI), Monograph MNO-12.
6. Ishihara, K. and Yoshimine, M. (1992), "Evaluation of settlements in sand deposits following liquefaction during earthquakes," Soils and Foundations, Japanese Geotechnical Society, 32 (1), 173-188.
7. Iwasaki, T., et al. (1978), "A practical method for assessing soil liquefaction potential based on case studies at various sites in Japan," Proceedings Of 3rd International Conference of Microzonation, San Francisco, 885-896.
8. Olson, S.M. and Johnson, C.I. (2008), "Analyzing Liquefaction-Induced Lateral Spreads Using Strength Ratios," Journal of Geotechnical and Geoenvironmental Engineering, ASCE 134 (8), 1035-1049.
9. Pradel, D. (1998), "Procedure to Evaluate Earthquake-Induced Settlements in Dry Sandy Soils," Journal of Geotechnical Engineering, ASCE 124 (4), pp. 364-368.
10. Seed, R.B. and Harder, L.F. (1990), "SPT-based analysis of cyclic pore pressure generation and undrained residual strength, Proceedings Of Seed Memorial Symposium, Vancouver, B.C., 351-376.
11. Stewart, J.P and Whang, D.H. (2003), "Simplified procedure to estimate ground settlement from seismic compression in compacted soils," Proceedings Of Pacific Conference on Earthquake Engineering, Paper 046.
12. Tokimatsu, K. and Seed, H.B. (1987), "Evaluation of settlements in sands due to earthquake shaking," Journal of Geotechnical Engineering, ASCE 113 (GT8), 861-878.
13. Tokimatsu, K. and Asaka, Y. (1998), "Effects of liquefaction-induced ground displacementson pile performance in the 1995 Hyogoken-Nambu Earthquake," Soils and Foundations, Special Issue, Japan Geotechnical Society, 163-177.
14. Tonkin & Taylor (2013), "Liquefaction Vulnerability Study," Report prepared for the Earthquake Commission (EQC), February, T&T Report No. 520.20.0200.
15. Toprak, S. and Holzer, T.L. (2003), "Liquefaction Potential Index: Field Assessment," Journal of Geotechnical and Geoenviromental Engineering, ASCE 129 (4), 315-322.
16. Youd, T.L, Idriss, I.M., et al. (2001), "Liquefaction resistance of soils: summary report from the 1996 NCEER and 1998 NCEER/NSF Workshops", Journal of Geotechnical and Geoenvironmental Engineering, ASCE 127 (10), 817-833.
17. Zhang, G, Robertson, P.K. and Brachman, R.W.I. (2004), "Estimating liquefaction-induced lateral displacement using the standard penetration test or cone penetration test," Journal of Geotechnical and Geoenvironmental Engineering, ASCE 130 (8), 861-871.

SIMPLIFIED LIQUEFACTION HAZARDS ASSESSMENT USING STANDARD PENETRATION TEST (SPT) DATA

(Copyright © SPTLIQ Version 6.0, InfraGEO Software, All Rights Reserved)
(Licensed to: NV5 - San Diego, California)

PROJECT INFORMATION	
Project Name	El Centro WWTP
Project No.	226816-00000167.00
Project Location	El Centro, CA
Analyzed By	Sam Koohi
Reviewed By	Carlos Amante

TOPOGRAPHIC SITE CONDITION	
Ground Slope, S	0.00 %
Free Face (L/H) Ratio	N/A

GROUNDWATER LEVEL DATA	
GWL Depth Measured During Test	16.00 feet
GWL Depth Used in Design	10.00 feet

BORING DATA	
Boring No.	B-1
Ground Surface Elevation	200.00 feet
Proposed Grade Elevation	200.00 feet
Borehole Diameter	6.00 inches
Hammer Weight	140.00 pounds
Hammer Drop	30.00 inches
Hammer Energy Efficiency Ratio, ER	85.00 %
Hammer Distance to Ground Surface	5.00 feet

SEISMIC DESIGN PARAMETERS	
Earthquake Moment Magnitude, M_w	7.00
Peak Ground Acceleration, A_{max}	0.50 g
Site to Seismic Source Distance, R	4.00 mi

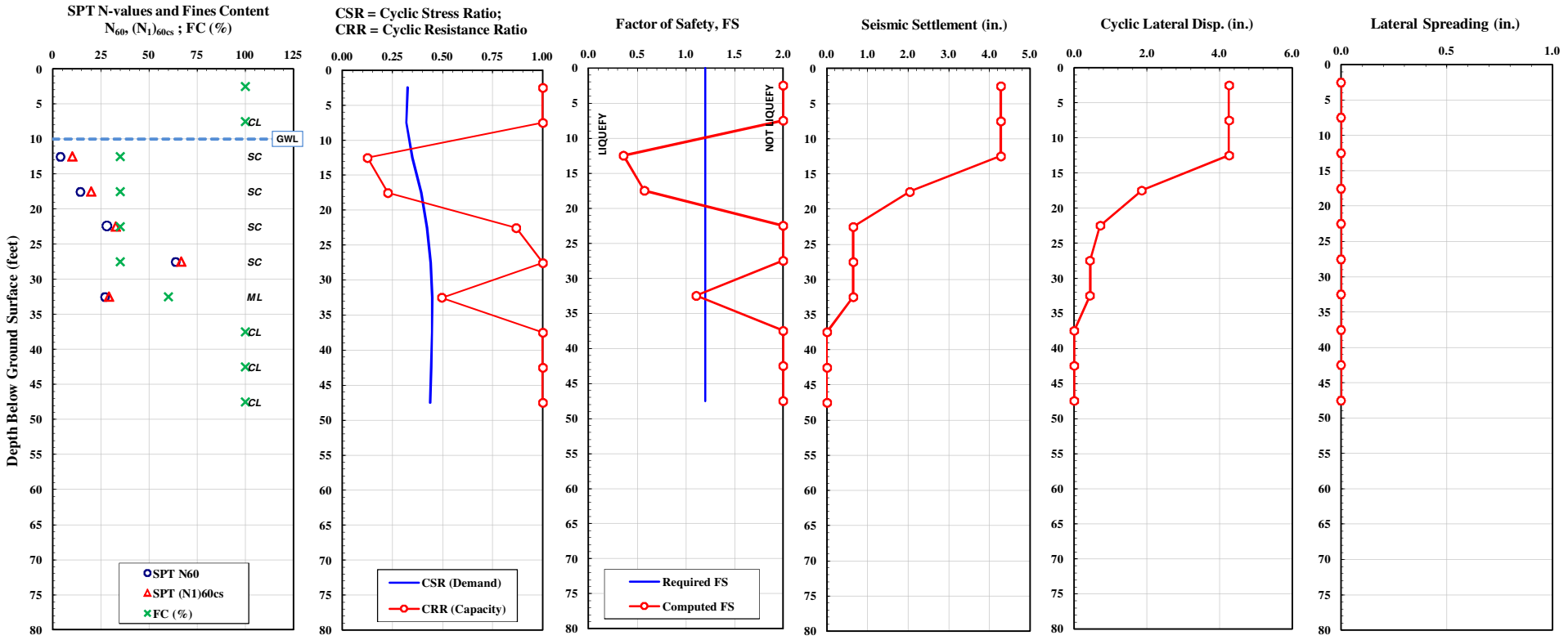

Analysis Methods Used ==>>

Liquefaction Triggering:
Boulanger-Idriss (2014)

Seismic Settlements:
Above GWL: Pradel (1998)
Below GWL: Ishihara and Yoshimine (1992)

Cyclic Lateral Displacements:
Above GWL: Pradel (1998)
Below GWL: Tokimatsu and Asaka (1998)

Lateral Spreading:
Zhang et al. (2004)

Appendix D

Typical Earthwork Guidelines

TYPICAL EARTHWORK GUIDELINES

1. GENERAL

These guidelines and the standard details attached hereto are presented as general procedures for earthwork construction for sites having slopes less than 10 feet high. They are to be utilized in conjunction with the project grading plans. These guidelines are considered a part of the geotechnical report, but are superseded by recommendations in the geotechnical report in the case of conflict. Evaluations performed by the consultant during the course of grading may result in new recommendations which could supersede these specifications and/or the recommendations of the geotechnical report. It is the responsibility of the contractor to read and understand these guidelines as well as the geotechnical report and project grading plans.

1.1. The contractor shall not vary from these guidelines without prior recommendations by the geotechnical consultant and the approval of the client or the client's authorized representative. Recommendations by the geotechnical consultant and/or client shall not be considered to preclude requirements for approval by the jurisdictional agency prior to the execution of any changes.

1.2. The contractor shall perform the grading operations in accordance with these specifications, and shall be responsible for the quality of the finished product notwithstanding the fact that grading work will be observed and tested by the geotechnical consultant.

1.3. It is the responsibility of the grading contractor to notify the geotechnical consultant and the jurisdictional agencies, as needed, prior to the start of work at the site and at any time that grading resumes after interruption. Each step of the grading operations shall be observed and documented by the geotechnical consultant and, where needed, reviewed by the appropriate jurisdictional agency prior to proceeding with subsequent work.

1.4. If, during the grading operations, geotechnical conditions are encountered which were not anticipated or described in the geotechnical report, the geotechnical consultant shall be notified immediately and additional recommendations, if applicable, may be provided.

1.5. An as-graded report shall be prepared by the geotechnical consultant and signed by a registered engineer and registered engineering geologist. The report documents the geotechnical consultants' observations, and field and laboratory test results, and provides conclusions regarding whether or not earthwork construction was performed in accordance with the geotechnical recommendations and the grading plans. Recommendations for foundation design, pavement design, subgrade treatment, etc., may also be included in the as-graded report.

1.6. For the purpose of evaluating quantities of materials excavated during grading and/or locating the limits of excavations, a licensed land surveyor or civil engineer shall be retained.

2. SITE PREPARATION

Site preparation shall be performed in accordance with the recommendations presented in the following sections.

2.1. The client, prior to any site preparation or grading, shall arrange and attend a pre-grading meeting between the grading contractor, the design engineer, the geotechnical consultant, and representatives of appropriate governing authorities, as well as any other involved parties. The parties shall be given two working days notice.

2.2. Clearing and grubbing shall consist of the substantial removal of vegetation, brush, grass, wood, stumps, trees, tree roots greater than 1/2-inch in diameter, and other deleterious materials from the areas to be graded. Clearing and grubbing shall extend to the outside of the proposed excavation and fill areas.

2.3. Demolition in the areas to be graded shall include removal of building structures, foundations, reservoirs, utilities (including underground pipelines, septic tanks, leach fields, seepage pits, cisterns, etc.), and other manmade surface and subsurface improvements, and the backfilling of mining shafts, tunnels and surface depressions. Demolition of utilities shall include capping or rerouting of pipelines at the project perimeter, and abandonment of wells in accordance with the requirements of the governing authorities and the recommendations of the geotechnical consultant at the time of demolition.

2.4. The debris generated during clearing, grubbing and/or demolition operations shall be removed from areas to be graded and disposed of off site at a legal dump site. Clearing, grubbing, and demolition operations shall be performed under the observation of the geotechnical consultant.

2.5. The ground surface beneath proposed fill areas shall be stripped of loose or unsuitable soil. These soils may be used as compacted fill provided they are generally free of organic or other deleterious materials and evaluated for use by the geotechnical consultant. The resulting surface shall be evaluated by the geotechnical consultant prior to proceeding. The cleared, natural ground surface shall be scarified to a depth of approximately 8 inches, moisture conditioned, and compacted in accordance with the specifications presented in Section 5 of these guidelines.

3. REMOVALS AND EXCAVATIONS

Removals and excavations shall be performed as recommended in the following sections.

3.1. Removals

3.1.1. Materials which are considered unsuitable shall be excavated under the observation of the geotechnical consultant in accordance with the recommendations contained herein. Unsuitable materials include, but may not be limited to, dry, loose, soft, wet, organic, compressible natural soils, fractured,

weathered, soft bedrock, and undocumented or otherwise deleterious fill materials.

3.1.2. Materials deemed by the geotechnical consultant to be unsatisfactory due to moisture conditions shall be excavated in accordance with the recommendations of the geotechnical consultant, watered or dried as needed, and mixed to generally uniform moisture content in accordance with the specifications presented in Section 5 of this document.

3.2. Excavations

3.2.1. Temporary excavations no deeper than 4 feet in firm fill or natural materials may be made with vertical side slopes. To satisfy California Occupational Safety and Health Administration (CAL OSHA) requirements, any excavation deeper than 4 feet shall be shored or laid back at a 1:1 inclination or flatter, depending on material type, if construction workers are to enter the excavation.

4. COMPACTED FILL

Fill shall be constructed as specified below or by other methods recommended by the geotec1mical consultant. Unless otherwise specified, fill soils shall be compacted to 90 percent relative compaction, as evaluated in accordance with ASTM Test Method D 1557.

4.1. Prior to placement of compacted fill, the contractor shall request an evaluation of the exposed ground surface by the geotechnical consultant. Unless otherwise recommended, the exposed ground surface shall then be scarified to a depth of approximately 8 inches and watered or dried, as needed, to achieve a generally uniform moisture content at or near the optimum moisture content. The scarified materials shall then be compacted to 90 percent relative compaction. The evaluation of compaction by the geotechnical consultant shall not be considered to preclude any requirements for observation or approval by governing agencies. It is the contractor's responsibility to notify the geotechnical consultant and the appropriate governing agency when project areas are ready for observation, and to provide reasonable time for that review.

4.2. Excavated on-site materials which are in general compliance with the recommendations of the geotechnical consultant may be utilized as compacted fill provided they are generally free of organic or other deleterious materials and do not contain rock fragments greater than 6 inches in dimension. During grading, the contractor may encounter soil types other than those analyzed during the preliminary geotechnical study. The geotechnical consultant shall be consulted to evaluate the suitability of any such soils for use as compacted fill.

4.3. Where imported materials are to be used on site, the geotechnical consultant shall be notified three working days in advance of importation in order that it may sample and test the materials from the proposed borrow sites. No imported materials shall be delivered for use on site without prior sampling, testing, and evaluation by the geotechnical consultant.

4.4. Soils imported for on-site use shall preferably have very low to low expansion potential (based on UBC Standard 18-2 test procedures). Lots on which expansive soils may be exposed at grade shall be undercut 3 feet or more and capped with very low to low expansion potential fill. In the event expansive soils are present near the ground surface, special design and construction considerations shall be utilized in general accordance with the recommendations of the geotechnical consultant.

4.5. Fill materials shall be moisture conditioned to near optimum moisture content prior to placement. The optimum moisture content will vary with material type and other factors. Moisture conditioning of fill soils shall be generally uniform in the soil mass.

4.6. Prior to placement of additional compacted fill material following a delay in the grading operations, the exposed surface of previously compacted fill shall be prepared to receive fill. Preparation may include scarification, moisture conditioning, and recompaction.

4.7. Compacted fill shall be placed in horizontal lifts of approximately 8 inches in loose thickness. Prior to compaction, each lift shall be watered or dried as needed to achieve near optimum moisture condition, mixed, and then compacted by mechanical methods, using sheepsfoot rollers, multiple-wheel pneumatic-tired rollers, or other appropriate compacting rollers, to the specified relative compaction. Successive lifts shall be treated in a like manner until the desired finished grades are achieved.

4.8. Fill shall be tested in the field by the geotechnical consultant for evaluation of general compliance with the recommended relative compaction and moisture conditions. Field density testing shall conform to ASTM D 1556-00 (Sand Cone method), D 2937-00 (Drive-Cylinder method), and/or D 2922-96 and D 3017-96 (Nuclear Gauge method). Generally, one test shall be provided for approximately every 2 vertical feet of fin placed, or for approximately every 1000 cubic yards of fill placed. In addition, on slope faces one or more tests shall be taken for approximately every 10,000 square feet of slope face and/or approximately every 10 vertical feet of slope height. Actual test intervals may vary as field conditions dictate. Fill found to be out of conformance with the grading recommendations shall be removed, moisture conditioned, and compacted or otherwise handled to accomplish general compliance with the grading recommendations.

4.9. The contractor shall assist the geotechnical consultant by excavating suitable test pits for removal evaluation and/or for testing of compacted fill.

4.10. At the request of the geotechnical consultant, the contractor shall "shut down" or restrict grading equipment from operating in the area being tested to provide adequate testing time and safety for the field technician.

4.11. The geotechnical consultant shall maintain a map with the approximate locations of field density tests. Unless the client provides for surveying of the test locations, the locations shown by the geotechnical consultant will be estimated. The geotechnical consultant shall not be held responsible for the accuracy of the horizontal or vertical locations or elevations.

4.12. Grading operations shall be performed under the observation of the geotechnical consultant. Testing and evaluation by the geotechnical consultant does not preclude the need for approval by or other requirements of the jurisdictional agencies.

4.13. Fill materials shall not be placed, spread or compacted during unfavorable weather conditions. When work is interrupted by heavy rains, the filling operation shall not be resumed until tests indicate that moisture content and density of the fill meet the project specifications. Regrading of the near-surface soil may be needed to achieve the specified moisture content and density.

4.14. Upon completion of grading and termination of observation by the geotechnical consultant, no further filling or excavating, including that planned for footings, foundations, retaining walls or other features, shall be performed without the involvement of the geotechnical consultant.

4.15. Fill placed in areas not previously viewed and evaluated by the geotechnical consultant may have to be removed and recompacted at the contractor's expense. The depth and extent of removal of the unobserved and undocumented fill will be decided based upon review of the field conditions by the geotechnical consultant.

4.16. Off-site fill shall be treated in the same manner as recommended in these specifications for on-site fills. Off-site fill subdrains temporarily terminated (up gradient) shall be surveyed for future locating and connection.

5. OVERSIZED MATERIAL

Oversized material shall be placed in accordance with the following recommendations.

5.1. During the course of grading operations, rocks or similar irreducible materials greater than 6 inches in dimension (oversized material) may be generated. These materials shall not be placed within the compacted fill unless placed in general accordance with the recommendations of the geotechnical consultant.

5.2. Where oversized rock (greater than 6 inches in dimension) or similar irreducible material is generated during grading, it is recommended, where practical, to waste such material off site, or on site in areas designated as "nonstructural rock disposal areas." Rock designated for disposal areas shall be placed with sufficient sandy soil to generally fill voids. The disposal area shall be capped with a 5-foot thickness of fill which is generally free of oversized material.

5.3. Rocks 6 inches in dimension and smaller may be utilized within the compacted fill, provided they are placed in such a manner that nesting of rock is not permitted. Fill shall be placed and compacted over and around the rock. The amount of rock greater than ¾-inch in dimension shall generally not exceed 40 percent of the total dry weight of the fill mass, unless the fill is specially designed and constructed as a "rock fill."

5.4. Rocks or similar irreducible materials greater than 6 inches but less than 4 feet in dimension generated during grading may be placed in windrows and capped with finer

materials in accordance with the recommendations of the geotechnical consultant and the approval of the governing agencies. Selected native or imported granular soil (Sand Equivalent of 30 or higher) shall be placed and flooded over and around the windrowed rock such that voids are filled. Windrows of oversized materials shall be staggered so that successive windrows of oversized materials are not in the same vertical plane. Rocks greater than 4 feet in dimension shall be broken down to 4 feet or smaller before placement, or they shall be disposed of off site.

6. SLOPES

The following sections provide recommendations for cut and fill slopes.

6.1. Cut Slopes

6.1.1. The geotechnical consultant shall observe cut slopes during excavation. The geotechnical consultant shall be notified by the contractor prior to beginning slope excavations.

6.1.2. If, during the course of grading, adverse or potentially adverse geotechnical conditions are encountered in the slope which were not anticipated in the preliminary evaluation report, the geotechnical consultant shall evaluate the conditions and provide appropriate recommendations.

6.2. Fill Slopes

6.2.1. When placing fill on slopes steeper than 5:1 (horizontal:vertical), topsoil, slope wash, colluvium, and other materials deemed unsuitable shall be removed. Near-horizontal keys and near-vertical benches shall be excavated into sound bedrock or fine fill material, in accordance with the recommendation of the geotechnical consultant. Keying and benching shall be accomplished. Compacted fill shall not be placed in an area subsequent to keying and benching until the area has been observed by the geotechnical consultant. Where the natural gradient of a slope is less than 5:1, benching is generally not recommended. However, fill shall not be placed on compressible or otherwise unsuitable materials left on the slope face.

6.2.2. Within a single fill area where grading procedures dictate two or more separate fills, temporary slopes (false slopes) may be created. When placing fill adjacent to a temporary slope, benching shall be conducted in the manner described in Section 7.2. A 3-foot or higher near-vertical bench shall be excavated into the documented fill prior to placement of additional fill.

6.2.3. Unless otherwise recommended by the geotechnical consultant and accepted by the Building Official, permanent fill slopes shall not be steeper than 2:1 (horizontal:vertical). The height of a fill slope shall be evaluated by the geotechnical consultant.

6.2.4. Unless specifically recommended otherwise, compacted fill slopes shall be overbuilt and cut back to grade, exposing firm compacted fill. The actual amount of overbuilding may vary as field conditions dictate. If the desired results are not achieved, the existing slopes shall be overexcavated and reconstructed in accordance with the recommendations of the geotechnical consultant. The degree of overbuilding may be increased until the desired compacted slope face condition is achieved. Care shall be taken by the contractor to provide mechanical compaction as close to the outer edge of the overbuilt slope surface as practical.

6.2.5. If access restrictions, property line location, or other constraints limit overbuilding and cutting back of the slope face, an alternative method for compaction of the slope face may be attempted by conventional construction procedures including backrolling at intervals of 4 feet or less in vertical slope height, or as dictated by the capability of the available equipment, whichever is less. Fill slopes shall be backrolled utilizing a conventional sheepsfoot-type roller. Care shall be taken to maintain the specified moisture conditions and/or reestablish the same, as needed, prior to backrolling.

6.2.6. The placement, moisture conditioning and compaction of fill slope materials shall be done in accordance with the recommendations presented in Section 5 of these guidelines.

6.2.7. The contractor shall be ultimately responsible for placing and compacting the soil out to the slope face to obtain a relative compaction of 90 percent as evaluated by ASTM D 1557 and a moisture content in accordance with Section 5. The geotechnical consultant shall perform field moisture and density tests at intervals of one test for approximately every 10,000 square feet of slope.

6.2.8. Backdrains shall be provided in fill as recommended by the geotechnical consultant.

6.3. Top-of-Slope Drainage

6.3.1. For pad areas above slopes, positive drainage shall be established away from the top of slope. This may be accomplished utilizing a berm and pad gradient of 2 percent or steeper at the top-of-slope areas. Site runoff shall not be permitted to flow over the tops of slopes.

6.3.2. Gunite-lined brow ditches shall be placed at the top of cut slopes to redirect surface runoff away from the slope face where drainage devices are not otherwise provided.

6.4. Slope Maintenance

6.4.1. In order to enhance surficial slope stability, slope planting shall be accomplished at the completion of grading. Slope plants shall consist of deep-rooting, variable root depth, drought-tolerant vegetation. Native vegetation is generally desirable.

Plants native to semiarid and mid areas may also be appropriate. Large-leafed ice plant should not be used on slopes. A landscape architect shall be consulted regarding the actual types of plants and planting configuration to be used.

6.4.2. Irrigation pipes shall be anchored to slope faces and not placed in trenches excavated into slope faces. Slope irrigation shall be maintained at a level just sufficient to support plant growth. Property owners shall be made aware that over watering of slopes is detrimental to slope stability. Slopes shall be monitored regularly and broken sprinkler heads and/or pipes shall be repaired immediately.

6.4.3. Periodic observation of landscaped slope areas shall be planned and appropriate measures taken to enhance growth of landscape plants.

6.4.4. Graded swales at the top of slopes and terrace drains shall be installed and the property owners notified that the drains shall be periodically checked so that they may be kept clear. Damage to drainage improvements shall be repaired immediately. To reduce siltation, terrace drains shall be constructed at a gradient of 3 percent or steeper, in accordance with the recommendations of the project civil engineer.

6.4.5. If slope failures occur, the geotechnical consultant shall be contacted immediately for field review of site conditions and development of recommendations for evaluation and repair.

7. TRENCH BACKFILL

The following sections provide recommendations for backfilling of trenches.

7.1. Trench backfill shall consist of granular soils (bedding) extending from the trench bottom to 1 foot or more above the pipe. On-site or imported fill which has been evaluated by the geotechnical consultant may be used above the granular backfill. The cover soils directly in contact with the pipe shall be classified as having a very low expansion potential, in accordance with UBC Standard 18-2, and shall contain no rocks or chunks of hard soil larger than 3/4-inch in diameter.

7.2. Trench backfill shall, unless otherwise recommended, be compacted by mechanical means to 90 percent relative compaction as evaluated by ASTM D 1557. Backfill soils shall be placed in loose lifts 8-inches thick or thinner, moisture conditioned, and compacted in accordance with the recommendations of Section 5 of these guidelines. The backfill shall be tested by the geotechnical consultant at vertical intervals of approximately 2 feet of backfill placed and at spacings along the trench of approximately 100 feet in the same lift.

7.3. Jetting of trench backfill materials is generally not a recommended method of densification, unless the on-site soils are sufficiently free-draining and provisions have been made for adequate dissipation of the water utilized in the jetting process.

7.4. If it is decided that jetting may be utilized, granular material with a sand equivalent greater than 30 shall be used for backfilling in the areas to be jetted. Jetting shall generally be considered for trenches 2 feet or narrower in width and 4 feet or shallower in depth. Following jetting operations, trench backfill shall be mechanically compacted to the specified compaction to finish grade.

7.5. Trench backfill which underlies the zone of influence of foundations shall be mechanically compacted to 90 percent or greater relative compaction, as evaluated by ASTM D 1557-02. The zone of influence of the foundations is generally defined as the roughly triangular area within the limits of a 1:1 (horizontal:vertical) projection from the inner and outer edges of the foundation, projected down and out from both edges.

7.6. Trench backfill within slab areas shall be compacted by mechanical means to a relative compaction of 90 percent, as evaluated by ASTM D 1557. For minor interior trenches, density testing may be omitted or spot testing may be performed, as deemed appropriate by the geotechnical consultant.

7.7. When compacting soil in close proximity to utilities, care shall be taken by the grading contractor so that mechanical methods used to compact the soils do not damage the utilities. If the utility contractors indicate that it is undesirable to use compaction equipment in close proximity to a buried conduit, then the grading contractor may elect to use light mechanical compaction equipment or, with the approval of the geotechnical consultant, cover the conduit with clean granular material. These granular materials shall be jetted in place to the top of the conduit in accordance with the recommendations of Section 8.4 prior to initiating mechanical compaction procedures. Other methods of utility trench compaction may also be appropriate, upon review by the geotechnical consultant and the utility contractor, at the time of construction.

7.8. Clean granular backfill and/or bedding materials are not recommended for use in slope areas unless provisions are made for a drainage system to mitigate the potential for buildup of seepage forces or piping of backfill materials.

7.9. The contractor shall exercise the specified safety precautions, in accordance with OSHA Trench Safety Regulations, while conducting trenching operations. Such precautions include shoring or laying back trench excavations at 1:1 or flatter, depending on material type, for trenches in excess of 5 feet in depth. The geotechnical consultant is not responsible for the safety of trench operations or stability of the trenches.

8. DRAINAGE

The following sections provide recommendations pertaining to site drainage.

8.1. Roof, pad, and slope drainage shall be such that it is away from slopes and structures to suitable discharge areas by nonerodible devices (e.g., gutters, downspouts, concrete swales, etc.).

8.2. Positive drainage adjacent to structures shall be established and maintained. Positive drainage may be accomplished by providing drainage away from the foundations of the

structure at a gradient of 2 percent or steeper for a distance of 5 feet or more outside the building perimeter, further maintained by a graded swale leading to an appropriate outlet, in accordance with the recommendations of the project civil engineer and/or landscape architect.

8.3. Surface drainage on the site shall be provided so that water is not permitted to pond. A gradient of 2 percent or steeper shall be maintained over the pad area and drainage patterns shall be established to remove water from the site to an appropriate outlet.

8.4. Care shall be taken by the contractor during grading to preserve any berms, drainage terraces, interceptor swales or other drainage devices of a permanent nature on or adjacent to the property. Drainage patterns established at the time of finish grading shall be maintained for the life of the project. Property owners shall be made very clearly aware that altering drainage patterns may be detrimental to slope stability and foundation performance.

9. SITE PROTECTION

The site shall be protected as outlined in the following sections.

9.1. Protection of the site during the period of grading shall be the responsibility of the contractor unless other provisions are made in writing and agreed upon among the concerned parties. Completion of a portion of the project shall not be considered to preclude that portion or adjacent areas from the need for site protection, until such time as the project is finished as agreed upon by the geotechnical consultant, the client, and the regulatory agency.

9.2. The contractor is responsible for the stability of temporary excavations. Recommendations by the geotechnical consultant pertaining to temporary excavations are made in consideration of stability of the finished project and, therefore, shall not be considered to preclude the responsibilities of the contractor. Recommendations by the geotechnical consultant shall also not be considered to preclude more restrictive requirements by the applicable regulatory agencies.

9.3. Precautions shall be taken during the performance of site clearing, excavation, and grading to protect the site from flooding, ponding, or inundation by surface runoff. Temporary provisions shall be made during the rainy season so that surface runoff is away from and off the working site. Where low areas cannot be avoided, pumps shall be provided to remove water as needed during periods of rainfall.

9.4. During periods of rainfall, plastic sheeting shall be used as needed to reduce the potential for unprotected slopes to become saturated. Where needed, the contractor shall install check dams, desilting basins, riprap, sandbags or other appropriate devices or methods to reduce erosion and provide recommended conditions during inclement weather.

9.5. During periods of rainfall, the geotechnical consultant shall be kept informed by the contractor of the nature of remedial or precautionary work being performed on site (e.g., pumping, placement of sandbags or plastic sheeting, other labor, dozing, etc.).

9.6. Following periods of rainfall, the contractor shall contact the geotechnical consultant and arrange a walk-over of the site in order to visually assess rain-related damage. The geotechnical consultant may also recommend excavation and testing in order to aid in the evaluation. At the request of the geotechnical consultant, the contractor shall make excavations in order to aid in evaluation of the extent of rain-related damage.

9.7. Rain or irrigation related damage shall be considered to include, but may not be limited to, erosion, silting, saturation, swelling, structural distress, and other adverse conditions noted by the geotechnical consultant. Soil adversely affected shall be classified as "Unsuitable Material" and shall be subject to overexcavation and replacement with compacted fill or to other remedial grading as recommended by the geotechnical consultant.

9.8. Relatively level areas where saturated soils and/or erosion gullies exist to depths greater than 1 foot shall be overexcavated to competent materials as evaluated by the geotechnical consultant. Where adverse conditions extend to less than 1 foot in depth, saturated and/or eroded materials may be processed in-place. Overexcavated or in-place processed materials shall be moisture conditioned and compacted in accordance with the recommendations provided in Section 5. If the desired results are not achieved, the affected materials shall be overexcavated, moisture conditioned, and compacted until the specifications are met.

9.9. Slope areas where saturated soil and/or erosion gullies exist to depths greater than 1 foot shall be overexcavated and replaced as compacted fill in accordance with the applicable specifications. Where adversely affected materials exist to depths of I foot or less below proposed finished grade, remedial grading by moisture conditioning in-place and compaction in accordance with the appropriate specifications may be attempted. If the desired results are not achieved, the affected materials shall be overexcavated, moisture conditioned, and compacted until the specifications are met. As conditions dictate, other slope repair procedures may also be recommended by the geotechnical consultant.

9.10. During construction, the contractor shall grade the site to provide positive drainage away from structures and to keep water from ponding adjacent to structures. Water shall not be allowed to damage adjacent properties. Positive drainage shall be maintained by the contractor until permanent drainage and erosion reducing devices are installed in accordance with project plans.

Appendix E

ASFE Information about Geotechnical Report

Important Information About Your

Geotechnical Engineering Report

Subsurface problems are a principal cause of construction delays, cost overruns, claims, and disputes

The following information is provided to help you manage your risks.

Geotechnical Services Are Performed for Specific Purposes, Persons, and Projects

Geotechnical engineers structure their services to meet the specific needs of their clients. A geotechnical engineering study conducted for a civil engineer may not fulfill the needs of a construction contractor or even another civil engineer. Because each geotechnical engineering study is unique, each geotechnical engineering report is unique, prepared *solely* for the client. No one except you should rely on your geotechnical engineering report without first conferring with the geotechnical engineer who prepared it. *And no one - not even you* - should apply the report for any purpose or project except the one originally contemplated.

Read the Full Report

Serious problems have occurred because those relying on a geotechnical engineering report did not read it all. Do not rely on an executive summary. Do not read selected elements only.

A Geotechnical Engineering Report Is Based on A Unique Set of Project-Specific Factors

Geotechnical engineers consider a number of unique, project-specific factors when establishing the scope of a study. Typical factors include: the client's goals, objectives, and risk management preferences; the general nature of the structure involved, its size, and configuration; the location of the structure on the site; and other planned or existing site improvements, such as access roads, parking lots, and underground utilities. Unless the geotechnical engineer who conducted the study specifically indicates otherwise, do not rely on a geotechnical engineering report that was:

- not prepared for you,
- not prepared for your project,
- not prepared for the specific site explored, or
- completed before important project changes were made.

Typical changes that can erode the reliability of an existing geotechnical engineering report include those that affect:

- the function of the proposed structure, as when it's changed from a parking garage to an office building, or from alight industrial plant to a refrigerated warehouse,
- elevation, configuration, location, orientation, or weight of the proposed structure,
- composition of the design team, or
- project ownership.

As a general rule, *always* inform your geotechnical engineer of project changes - even minor ones - and request an assessment of their impact. *Geotechnical engineers cannot accept responsibility or liability for problems that occur because their reports do not consider developments of which they were not informed.*

Subsurface Conditions Can Change

A geotechnical engineering report is based on conditions that existed at the time the study was performed. *Do not rely on a geotechnical engineering report* whose adequacy may have been affected by: the passage of time; by man-made events, such as construction on or adjacent to the site; or by natural events, such as floods, earthquakes, or groundwater fluctuations. *Always* contact the geotechnical engineer before applying the report to determine if it is still reliable. A minor amount of additional testing or analysis could prevent major problems.

Most Geotechnical Findings Are Professional Opinions

Site exploration identifies subsurface conditions only at those points where subsurface tests are conducted or samples are taken. Geotechnical engineers review field and laboratory data and then apply their professional judgment to render an opinion about subsurface conditions throughout the site. Actual subsurface conditions may differ-sometimes significantly from those indicated in your report. Retaining the geotechnical engineer who developed your report to provide construction observation is the most effective method of managing the risks associated with unanticipated conditions.

A Report's Recommendations Are *Not* Final

Do not overrely on the construction recommendations included in your report. *Those recommendations are not final*, because geotechnical engineers develop them principally from judgment and opinion. Geotechnical engineers can finalize their recommendations only by observing actual

subsurface conditions revealed during construction. The geotechnical engineer who developed your report cannot assume responsibility or liability for the report's recommendations if that engineer does not perform construction observation.

A Geotechnical Engineering Report Is Subject to Misinterpretation

Other design team members' misinterpretation of geotechnical engineering reports has resulted in costly problems. Lower that risk by having your geotechnical engineer confer with appropriate members of the design team after submitting the report. Also retain your geotechnical engineer to review pertinent elements of the design team's plans and specifications. Contractors can also misinterpret a geotechnical engineering report. Reduce that risk by having your geotechnical engineer participate in prebid and preconstruction conferences, and by providing construction observation.

Do Not Redraw the Engineer's Logs

Geotechnical engineers prepare final boring and testing logs based upon their interpretation of field logs and laboratory data. To prevent errors or omissions, the logs included in a geotechnical engineering report should *never* be redrawn for inclusion in architectural or other design drawings. Only photographic or electronic reproduction is acceptable, *but recognize that separating logs from the report can elevate risk.*

Give Contractors a Complete Report and Guidance

Some owners and design professionals mistakenly believe they can make contractors liable for unanticipated subsurface conditions by limiting what they provide for bid preparation. To help prevent costly problems, give contractors the complete geotechnical engineering report, *but* preface it with a clearly written letter of transmittal. In that letter, advise contractors that the report was not prepared for purposes of bid development and that the report's accuracy is limited; encourage them to confer with the geotechnical engineer who prepared the report (a modest fee may be required) and/or to conduct additional study to obtain the specific types of information they need or prefer. A prebid conference can also be valuable. *Be sure contractors have sufficient time* to perform additional study. Only then might you be in a position to give contractors the best information available to you, while requiring them to at least share some of the financial responsibilities stemming from unanticipated conditions.

Read Responsibility Provisions Closely

Some clients, design professionals, and contractors do not recognize that geotechnical engineering is far less exact than other engineering disciplines. This lack of understanding has created unrealistic expectations that have led to disappointments, claims, and disputes. To help reduce the risk of such outcomes, geotechnical engineers commonly include a variety of explanatory provisions in their reports. Sometimes labeled "limitations" many of these provisions indicate where geotechnical engineers' responsibilities begin and end, to help others recognize their own responsibilities and risks. *Read these provisions closely.* Ask questions. Your geotechnical engineer should respond fully and frankly.

Geoenvironmental Concerns Are Not Covered

The equipment, techniques, and personnel used to perform a *geoenvironmental* study differ significantly from those used to perform a *geotechnical* study. For that reason, a geotechnical engineering report does not usually relate any geoenvironmental findings, conclusions, or recommendations; e.g., about the likelihood of encountering underground storage tanks or regulated contaminants. *Unanticipated environmental problems have led to numerous project failures.* If you have not yet obtained your own geoenvironmental information, ask your geotechnical consultant for risk management guidance. *Do not rely on an environmental report prepared for someone else.*

Obtain Professional Assistance To Deal with Mold

Diverse strategies can be applied during building design, construction, operation, and maintenance to prevent significant amounts of mold from growing on indoor surfaces. To be effective, all such strategies should be devised for the express purpose of mold prevention, integrated into a comprehensive plan, and executed with diligent oversight by a professional mold prevention consultant. Because just a small amount of water or moisture can lead to the development of severe mold infestations, a number of mold prevention strategies focus on keeping building surfaces dry. While groundwater, water infiltration, and similar issues may have been addressed as part of the geotechnical engineering study whose findings are conveyed in-this report, the geotechnical engineer in charge of this project is not a mold prevention consultant; ***none of the services performed in connection with the geotechnical engineer's study were designed or conducted for the purpose of mold prevention. Proper implementation of the recommendations conveyed in this report will not of itself be sufficient to prevent mold from growing in or on the structure involved.***

Rely on Your ASFE-Member Geotechnical Engineer For Additional Assistance

Membership in ASFE/The Best People on Earth exposes geotechnical engineers to a wide array of risk management techniques that can be of genuine benefit for everyone involved with a construction project. Confer with your ASFE-member geotechnical engineer for more information.

ASFE
The Best People on Earth

8811 Colesville Road/Suite G106, Silver Spring, MD 20910
Telephone:' 301/565-2733 Facsimile: 301/589-2017
e-mail: info@asfe.org www.asfe.org

Copyright 2004 by ASFE, Inc. Duplication, reproduction, or copying of this document, in whole or in part, by any means whatsoever, is strictly prohibited, except with ASFE's specific written permission. Excerpting, quoting, or otherwise extracting wording from this document is permitted only with the express written permission of ASFE, and only for purposes of scholarly research or book review. Only members of ASFE may use this document as a complement to or as an element of a geotechnical engineering report. Any other firm, individual, or other entity that so uses this document without being anASFE member could be committing negligent or intentional (fraudulent) misrepresentation.

IIGER06045.0M

CONSTRUCTION PLANS
CITY OF EL CENTRO
WASTEWATER TREATMENT PLANT
UV DISINFECTION IMPROVEMENTS
JUNE 2024

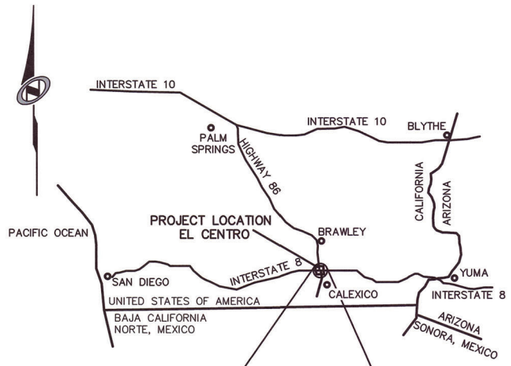

VICINITY MAP
NOT TO SCALE

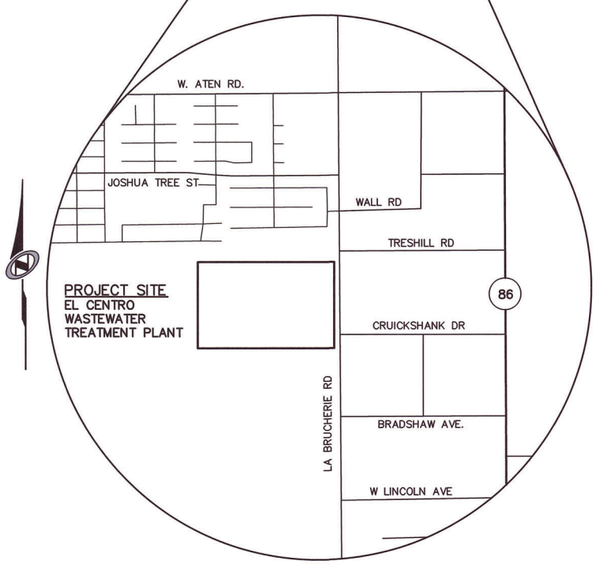

LOCATION MAP
NOT TO SCALE

INDEX OF SHEETS

SHEET NO.	DWG. NO.	TITLE
1	T-01	TITLE SHEET
2	G-01	GENERAL NOTES AND SITE MAP
3	D-01	UV UNITS – DEMOLITION PLAN
4	M-01	UV UNITS – MECHANICAL PLAN
5	S-01	STRUCTURAL NOTES
6	S-02	STRUCTURAL PLAN
7	S-03	STRUCTURAL SECTIONS
8	S-04	STRUCTURAL DETAILS
9	E-01	ELECTRICAL SYMBOLS, LEGEND, & PHASING
10	E-02	SITE ELECTRICAL PLAN
11	E-03	PHASE 1 DEMOLITION PLAN
12	E-04	SINGLE LINE DIAGRAM PHASE 1 DEMOLITION PLAN
13	E-05	PHASE 2 DEMOLITION PLAN
14	E-06	SINGLE LINE DIAGRAM PHASE 2 DEMOLITION PLAN
15	E-07	POWER AND SIGNAL PLAN PHASE 1
16	E-08	SINGLE LINE DIAGRAM PHASE 1
17	E-09	POWER AND SIGNAL PLAN PHASE 2
18	E-10	SINGLE LINE DIAGRAM PHASE 2
19	E-11	OVERAL SINGLE LINE SIGNAL PLAN
20	E-12	PANEL SCHEDULE
21	E-13	ELECTRICAL DIAGRAMS AND POWER ONE LINE DIAGRAM

UTILITIES

CABLE
ADELPHIA COMMUNICATIONS
313 NORTH 8TH STREET
EL CENTRO, CA. 92243
(760) 352-8835

GAS
SOUTHERN CALIFORNIA GAS COMPANY
1981 W. LUGONIA AVENUE
REDLANDS, CA. 92374
(909) 335-7507

THE GAS COMPANY
1111 W. MAIN STREET
EL CENTRO, CA. 92243

POTABLE WATER AND SEWER
CITY OF EL CENTRO
PUBLIC WORKS
320 ORANGE AVE.1029 SOUTH
EL CENTRO, CA. 92243
(760) 337-4505

TELEPHONE
PACIFIC BELL TELEPHONE
1029 SOUTH 2ND STREET, RM. 7
EL CENTRO, CA. 92243

AT&T PHONE COMPANY
227 CAPILLO AVENUE
CALEXICO, CA. 92231

WATER AND POWER
IMPERIAL IRRIGATION DISTRICT
333 EAST BARIONI BLVD.
IMPERIAL, CA. 92251

APPROVED: _____ DATE: 10/28/24
CITY ENGINEER

DATE: 6/21/24 TIME: 10:58:12 AM
SERVER: LAYOUT:
PATH: N:\21-0001309-05\CADD\CIVIL
DRAWING NAME: T-01.DWG
PAGE SETUP: 24x36_PDF-NoMerge
DESIGNER: APS PROJ. MGR: JOP

NO.	BY	DATE	REVISIONS:

CAUTION: The engineer preparing these plans will not be responsible for, or liable for, unauthorized changes to or uses of these plans. All changes to the plans must be in writing and must be approved by the preparer of these plans.

REGISTERED PROFESSIONAL ENGINEER
JULIAN O. PALACIOS
No. C-67335
Exp. 06/30/25
CIVIL
STATE OF CALIFORNIA

NV5
15092 AVENUE OF SCIENCE, SUITE 200
SAN DIEGO, CA 92128
P: 858.385.0500 WWW.NV5.COM

EL CENTRO WWTP - UV DISINFECTION IMPROVEMENTS
TITLE SHEET

PREPARED FOR: CITY OF EL CENTRO
DATE SUBMITTED: JUNE 2024

DRAWING NUMBER
T-01
OF 21 SHEETS
SCALE
VERTICAL: 1"= ####
HORIZONTAL: 1"= ####
JOB NUMBER
227521-0001309.05

GENERAL NOTES:

1. THE UNDERGROUND UTILITIES SHOWN HAVE BEEN LOCATED FROM EXISTING DRAWINGS. THE ENGINEER OR THE OWNER MAKES NO GUARANTEE THAT THE UNDERGROUND UTILITIES SHOWN COMPRISE ALL SUCH UTILITIES IN THE AREA, EITHER IN SERVICE OR ABANDONED. THE ENGINEER FURTHER DOES NOT WARRANT THAT THE UNDERGROUND UTILITIES SHOWN ARE IN THE EXACT LOCATION INDICATED ALTHOUGH THE ENGINEER DOES CERTIFY THAT THEY ARE LOCATED AS ACCURATELY AS POSSIBLE FROM INFORMATION AVAILABLE. THE ENGINEER HAS NOT PHYSICALLY LOCATED THE UNDERGROUND UTILITIES. IT IS THE CONTRACTOR'S RESPONSIBILITY TO INVESTIGATE THE AREA OF THE PROPOSED CONSTRUCTION PRIOR TO BEGINNING ANY EXCAVATION, TO LOCATE ALL UNDERGROUND UTILITIES, SHOWN OR NOT ON THESE DRAWINGS.
2. THE CONTRACTOR SHALL REPLACE ALL EXISTING PAVEMENT, SIDEWALKS, CURBS AND ALL OTHER EXISTING FACILITIES ABOVE OR BELOW GROUND THAT ARE DAMAGED DURING CONSTRUCTION OF THE IMPROVEMENTS TO THE WASTEWATER TREATMENT PLANT.
3. THE CONTRACTOR AGREES THAT HE SHALL ASSUME COMPLETE RESPONSIBILITY FOR JOB SITE CONDITIONS DURING THE CONSTRUCTION, INCLUDING THE SAFETY OF ALL PERSONS AND PROPERTY. THIS REQUIREMENT SHALL APPLY CONTINUOUSLY AND NOT BE LIMITED TO NORMAL WORKING HOURS. THE CONTRACTOR SHALL DEFEND, INDEMNIFY AND HOLD THE OWNER AND ENGINEER HARMLESS FROM ANY AND ALL LIABILITY, REAL OR ALLEGED, IN CONNECTION WITH THE PERFORMANCE OF WORK ON THIS PROJECT, EXCEPTING LIABILITY ARISING FROM THE SOLE NEGLIGENCE OF THE OWNER OR THE ENGINEER.
4. ALL EXISTING MANWAYS, VAULTS, STRUCTURES, EQUIPMENT AND PIPING ARE TO BE PROTECTED IN PLACE UNLESS OTHERWISE SHOWN.
5. CONTRACTOR SHALL OBTAIN ALL CONSTRUCTION PERMITS AND PAY ALL FEES.
6. ALL CONSTRUCTION SHALL BE IN ACCORDANCE WITH LOCAL CODES AND REGULATIONS, EXCEPT AS MODIFIED IN THE PLANS AND SPECIFICATIONS.
7. CONTRACTOR IS RESPONSIBLE FOR DUST, EROSION CONTROL, DRAINAGE, AND DEWATERING FOR THE DURATION OF THE PROJECT.
8. AS-BUILT DRAWINGS SHALL BE SUBMITTED TO THE CITY OF EL CENTRO PRIOR TO ACCEPTANCE OF THIS PROJECT.

GENERAL DEMOLITION NOTES

1. THE SCOPE OF DEMOLITION WORK SHALL NOT BE LIMITED TO THOSE ITEMS DEFINED ON THE DEMOLITION DRAWINGS BUT SHALL ALSO INCLUDE FIXTURES, CONDUITS, WIRING, MECHANICAL EQUIPMENT, MISCELLANEOUS CONCRETE, RUBBISH, AND ANY OTHER ITEMS OR MATERIAL NECESSARY FOR THE PERFORMANCE OF THIS CONTRACT.
2. THE CONTRACTOR SHALL PROTECT FROM DAMAGE ANY EXISTING STRUCTURES, PIPING OR EQUIPMENT NOT SUBJECT TO REMOVAL.
3. THE CONTRACTOR SHALL BE RESPONSIBLE TO COORDINATE WITH THE OWNER FOR WHICH EQUIPMENT AND APPURTENANCES SHALL BE SALVAGED OR DISPOSED OF AND TO VERIFY THAT ALL ITEMS TO BE SALVAGED ARE IDENTIFIED HEREIN. ITEMS TO BE SALVAGED SHALL BE DISCONNECTED, HANDLED WITH CARE SO AS TO AVOID DAMAGE, AND DELIVERED TO THE OWNER. DAMAGE TO ITEMS TO BE SALVAGED THAT IS DIRECTLY ATTRIBUTED TO THE CONTRACTOR'S OPERATIONS SHALL BE REPAIRED OR REPLACED AT THE CONTRACTOR'S EXPENSE.
4. THE CONTRACTOR SHALL BE REQUIRED TO COORDINATE HIS DEMOLITION WORK WITH THE OPERATION OF THE WWTP. THE CONTRACTOR SHALL BE RESPONSIBLE FOR ALL COSTS ASSOCIATED WITH THIS COORDINATION. THE DEMOLITION WORK FOR THIS PROJECT SHALL ALSO INCLUDE THE REMOVAL AND OFF-SITE DISPOSAL OR SALVAGE OR RELOCATION OF CONCRETE, SIGNAGE, PIPING EQUIPMENT, AND OTHER NON-NATIVE MATERIALS FOR THE CONSTRUCTION OF THE IMPROVEMENTS.

GRADING NOTES:

1. CONTRACTOR SHALL CLEARLY DELINEATE ALL PROPERTY CORNERS IN THE FIELD PRIOR TO COMMENCEMENT OF ANY CONSTRUCTION/GRADING.
2. DURING ROUGH GRADING OPERATIONS AND PRIOR TO CONSTRUCTION OF PERMANENT DRAINAGE STRUCTURES, TEMPORARY DRAINAGE CONTROL SHOULD BE PROVIDED TO PREVENT PONDING WATER AND DAMAGE TO ADJACENT PROPERTIES.
3. DUST SHALL BE CONTROLLED BY WATERING OR OTHER APPROVED METHODS.
4. NO FILL SHALL BE PLACED ON EXISTING GROUND UNTIL THE GROUND HAS BEEN CLEARED OF WEEDS, DEBRIS, TOPSOIL AND OTHER DELETERIOUS MATERIAL.
5. "NO OBSTRUCTION OF FLOOD PLAINS OR NATURAL WATER COURSES SHALL BE PERMITTED."
6. ALL EXISTING DRAINAGE COURSES ON THE PROJECT SITE MUST CONTINUE TO FUNCTION, ESPECIALLY DURING STORM CONDITIONS. PROTECTIVE MEASURES AND TEMPORARY DRAINAGE PROVISIONS MUST BE USED TO PROTECT ADJOINING PROPERTIES DURING GRADING OPERATIONS.
7. ALL GRADING SHALL BE DONE IN CONFORMANCE WITH RECOMMENDATIONS OF THE REPORT OF SUBSURFACE EXPLORATION.
8. ALL GRADING SHALL BE DONE UNDER THE SUPERVISION OF A COMPETENT SOILS ENGINEER WHO SHALL CERTIFY THAT ALL FILL HAS BEEN PROPERLY PLACED AND WHO SHALL SUBMIT A FINAL COMPACTION REPORT FOR ALL FILLS OVER 1' DEEP.

NOTIFICATIONS:

NOTE: THE CONTRACTOR SHALL NOTIFY THE FOLLOWING UTILITIES OR AGENCIES 48 HOURS PRIOR TO STARTING CONSTRUCTION OR EXCAVATION:

CITY OF EL CENTRO (760) 337-4522
(ATTN: WWTP SUPERVISOR)

UNDERGROUND SERVICE ALERT (DIGALERT): 8-1-1

CONTRACTORS RESPONSIBILITY:

CONTRACTOR AGREES THAT HE SHALL ASSUME SOLE AND COMPLETE RESPONSIBILITY FOR JOB SITE CONDITIONS DURING THE COURSE OF CONSTRUCTION OF THIS PROJECT. INCLUDING SAFETY OF ALL PERSONS AND PROPERTY; THAT THIS REQUIREMENT SHALL APPLY CONTINUOUSLY AND NOT BE LIMITED TO NORMAL WORKING HOURS; AND THAT THE CONTRACTOR SHALL DEFEND, INDEMNIFY AND HOLD THE OWNER AND THE ENGINEER HARMLESS FROM ANY AND ALL LIABILITY, REAL OR ALLEGED, IN CONNECTION WITH THE PERFORMANCE OF WORK ON THIS PROJECT, EXCEPTING FOR LIABILITY ARISING FROM THE SOLE NEGLIGENCE OF THE OWNER OR THE ENGINEER.

BASIS OF BEARINGS:

BEARINGS ARE REFERENCED TO GRID NORTH AS DEFINED BY THE CALIFORNIA COORDINATE SYSTEM 1983, ZONE VI AND ARE BASED ON THE CALCULATED LINE FROM CORS STATION P494 OF PUBLISHED NGS PID DN 7401 TO POINT OCTILLO OF PUBLISHED NGS PID DN0110.
i.e. SOUTH 83°19'16" EAST.

BASIS OF COORDINATES:

a.a. THE COORDINATES ARE REFERENCED TO THE NORTH AMERICAN DATUM OF 1983 AT EPOCH 2007, AND ARE EXPRESSED IN TERMS OF THE CALIFORNIA COORDINATE SYSTEM 1983, ZONE VI, AND ARE BASED ON COR STATION P494. THE RESULTING GRID VALUE FOR POINT P494 = N_1856571.56 SFT, E_6720901.11 SFT.

BASIS OF ELEVATION:

ELEVATION IS REFERENCED TO NAVD88, UTILIZING GEOID 12A AND DETERMINED LOCALLY BY A POINT W 90 PER NGS PID DB0807. NAVD88 ELEVATION=186.42 SFT.

[NAVD88 ELEVATION (FT)] + 100.0 FT = DESIGN ELEVATION (FT)

ABBREVIATIONS

AC	ASPHALT CONCRETE
CA	CALIFORNIA
CL OR ℄	CENTERLINE, CLASS
CONC	CONCRETE
DEG	DEGREE
DEMO	DEMOLISH/DEMOLITION
DET	DETAIL
DWG(S)	DRAWING(S)
E	EAST
EA	EACH
ELEC	ELECTRIC
EX./EXIST.	EXISTING
FLG	FLANGE
FO	FIBER OPTIC
FRP	FIBER REINFORCED PLASTIC
FT (OR ')	FEET
IN (OR ")	INCHES
LF	LINEAR FEET
MAX	MAXIMUM
MIN	MINIMUM
N	NORTH
N/A	NOT APPLICABLE
NO.	NUMBER
NTS	NOT TO SCALE
OSHA	OCCUPATIONAL SAFETY AND HEALTH ADMINISTRATION
PIP	PROTECT IN PLACE
PR OR PROP	PROPOSED
PVC	POLYVINYL CHLORIDE
S	SOUTH
SF	SQUARE FEET
SHT	SHEET
SPECS	SPECIFICATIONS
SS, SST	STAINLESS STEEL
SSPWC	STANDARD SPECIFICATIONS FOR PUBLIC WORKS CONSTRUCTION
TYP	TYPICAL
UV	ULTRAVIOLET
W	WEST
WL	WATER LEVEL
WWTP	WASTEWATER TREATMENT PLANT

LEGEND:

- PROPERTY LINE
- CENTER LINE
- SECTION OUTLINE, BOUNDARY OR FUTURE EQUIPMENT AND MATERIALS
- NEW PIPING
- EXISTING PIPING, EQUIPMENT OR STRUCTURES
- EXISTING PIPING TO BE ABANDONED OR REMOVED UNDER THIS CONTRACT. ABANDONED WHEN NOT IN CONFLICT WITH NEW CONSTRUCTION WORK.
- EXIST EQUIPMENT OR MATERIALS TO BE REMOVED UNDER THIS CONTRACT

NOTES:

1. ELECTRICAL SYMBOLS SHOWN ON ELECTRICAL SHEETS.
2. FOR WELDING SYMBOLS USE AMERICAN WELDING SOCIETY STANDARD SYMBOLS. SEE AMERICAN INSTITUTE OF STEEL CONSTRUCTION MANUAL.

SECTION AND DETAIL DESIGNATION

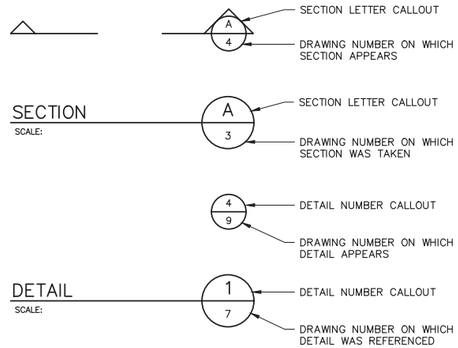

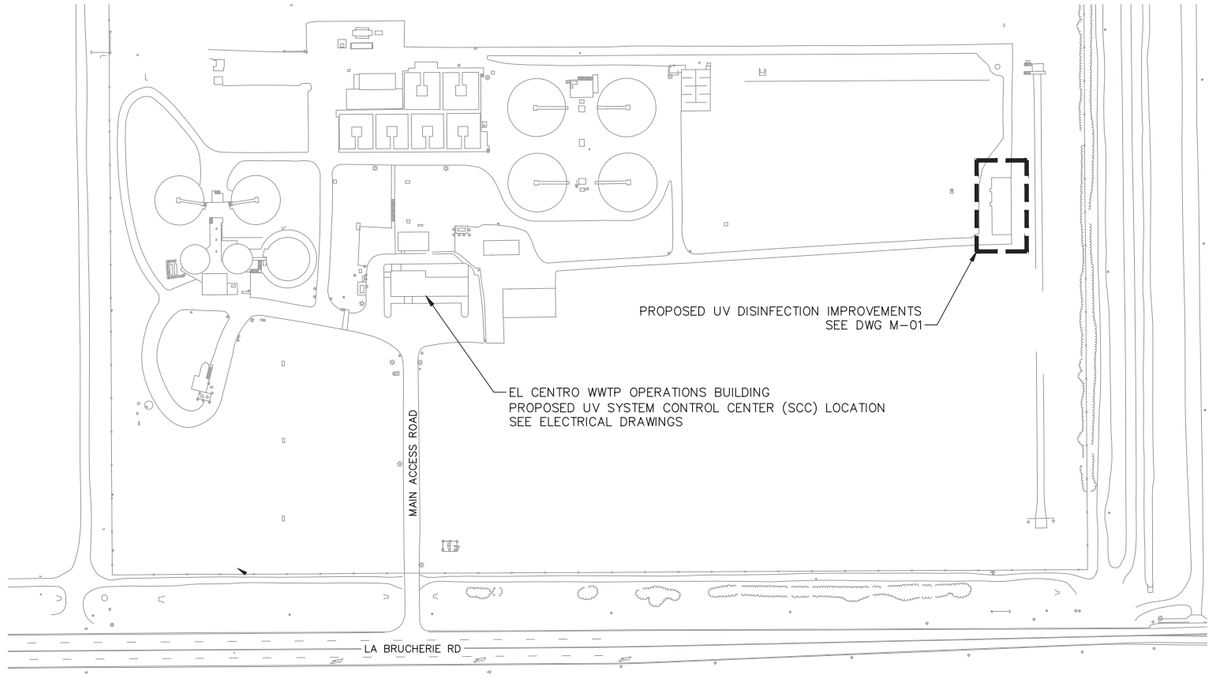

GRAPHIC SCALE
0' 50' 100' 150' 200' 300' 400'
SCALE 1"= 100'

SITE MAP
SCALE: 1"= 100'

DATE: 6/21/24 TIME: 10:58:45 AM
SERVER: LAYOUT:
PATH: N:\21-0001309-05\CADD\CIVIL
DRAWING NAME: G-01.DWG
PAGE SETUP: 24x36_PDF-NoMerge
DESIGNER: APS PROJ. MGR: JOP

NO.	BY	DATE	REVISIONS:

CAUTION: The engineer preparing these plans will not be responsible for, or liable for, unauthorized changes to or uses of these plans. All changes to the plans must be in writing and must be approved by the preparer of these plans.

REGISTERED PROFESSIONAL ENGINEER JULIA M. PARKS No. 93035 Exp. 06/30/25 CIVIL STATE OF CALIFORNIA

NV5
15092 AVENUE OF SCIENCE, SUITE 200
SAN DIEGO, CA 92128
P: 858.385.0500 WWW.NV5.COM

EL CENTRO WWTP - UV DISINFECTION IMPROVEMENTS
GENERAL NOTES AND SITE MAP

PREPARED FOR: CITY OF EL CENTRO DATE SUBMITTED: JUNE 2024

DRAWING NUMBER G-01
OF 21 SHEETS
SCALE
VERTICAL: 1"= ####
HORIZONTAL: 1"= ####
JOB NUMBER 227521-0001309.05

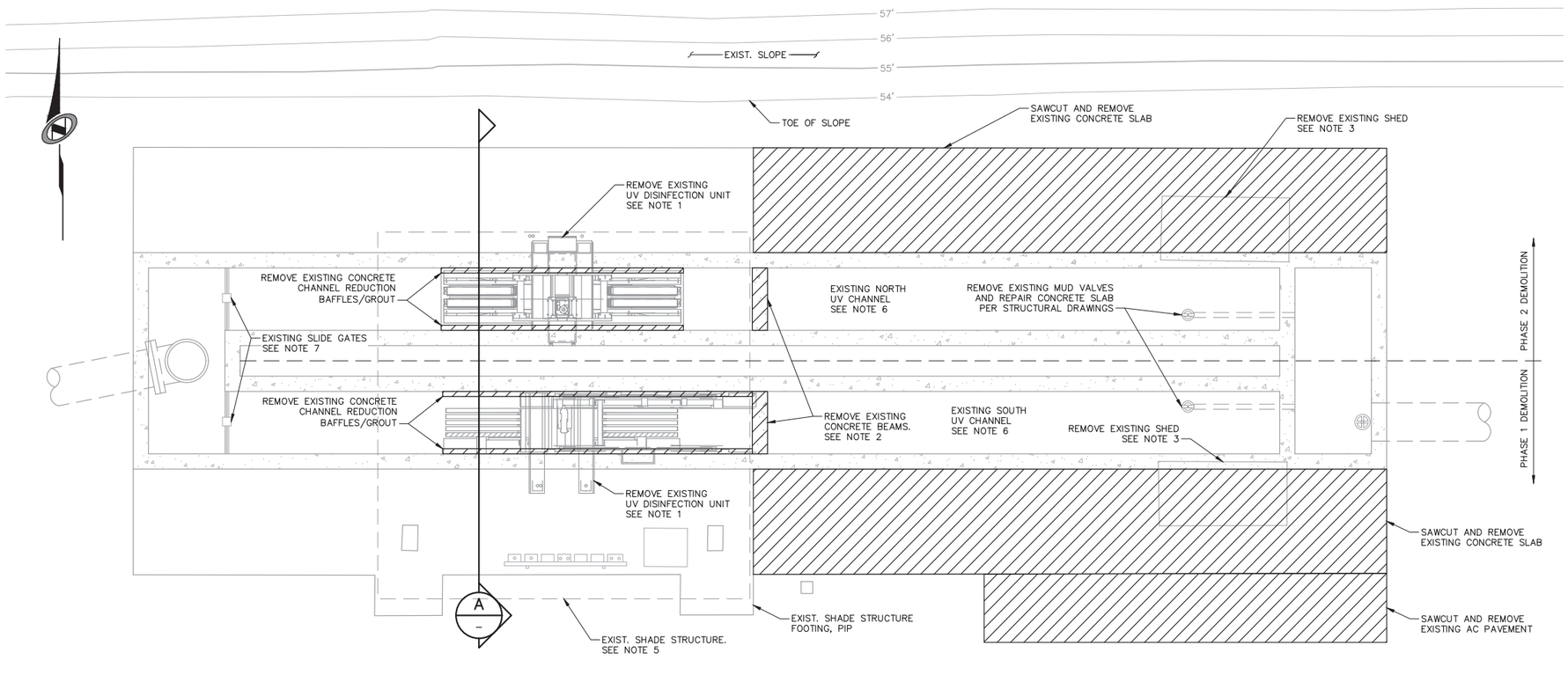

UV DISINFECTION CHANNEL DEMOLITION PLAN

SCALE: 1/4"= 1'-0"

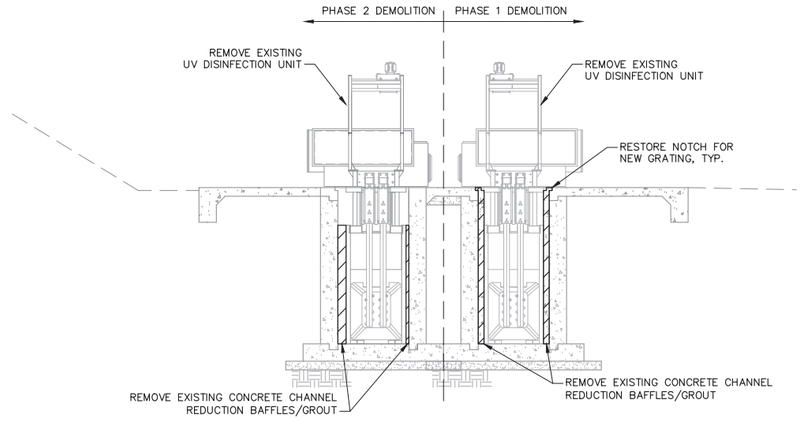

A — UV DISINFECTION CHANNEL DEMOLITION SECTION

SCALE: 1/4"= 1'-0"

NOTES

1. SEE SPECIFICATIONS FOR CONSTRUCTION SEQUENCE. AT LEAST ONE UV DISINFECTION UNIT MUST BE IN SERVICE AT ALL TIMES DURING CONTRUCTION.
2. CONTRACTOR SHALL CONSTRUCT NEW CHANNEL BEAM PER STRUCTURAL DRAWINGS PRIOR TO DEMOLITION OF EXISTING BEAM.
3. CONTRACTOR SHALL SALVAGE THE EXISTING WATER LEVEL (FLOW) CONTROLLERS AND THE EXISTING REFRIGERATED WATER SAMPLERS LOCATED INSIDE THE EXISTING SHEDS, AND SHALL SALVAGE THE EXISTING WATER LEVEL (FLOW) SENSORS LOCATED IN THE UV CHANNELS AND WIRING BETWEEN THE SENSORS AND THE CONTROLLERS. SEE MECHANICAL DRAWINGS FOR NEW LOCATIONS.
4. SEE ELECTRICAL DRAWINGS FOR ELECTRICAL DEMOLITION WORK.
5. CONTRACTOR SHALL REMOVE AND RE-INSTALL THE EXISTING SHADE STRUCTURE AS NEEDED FOR PROPOSED IMPROVEMENTS.
6. CONTRACTOR SHALL DEWATER, REMOVE SLUDGE, AND THOROUGHLY CLEAN EACH UV CHANNEL PRIOR TO DEMOLITION WORK.
7. CONTRACTOR SHALL ANTICIPATE NUISANCE (LEAKAGE) WATER FROM EXISTING SLIDE GATES AND SHALL PROVIDE TEMPORARY MEASURES TO CONTROL THE NUISANCE WATER.

DATE: 6/27/24 TIME: 10:41:32 AM
SERVER: LAYOUT:
PATH: N:\21-0001309-05\CADD\CIVIL
DRAWING NAME: D-01.DWG
PAGE SETUP: ----
DESIGNER: APS PROJ. MGR: JOP

NO.	BY	DATE	REVISIONS:

CAUTION: *The engineer preparing these plans will not be responsible for, or liable for, unauthorized changes to or uses of these plans. All changes to the plans must be approved by the preparer of these plans.*

REGISTERED PROFESSIONAL ENGINEER JOSEPH P. DEVLIN No. C 76025 Exp. 06/30/25 CIVIL STATE OF CALIFORNIA

NV5
15092 AVENUE OF SCIENCE, SUITE 200
SAN DIEGO, CA 92128
P: 858.385.0500 WWW.NV5.COM

EL CENTRO WWTP - UV DISINFECTION IMPROVEMENTS

UV UNITS - DEMOLITION PLAN

PREPARED FOR: CITY OF EL CENTRO **DATE SUBMITTED: JUNE 2024**

DRAWING NUMBER
D-01
OF 21 SHEETS

SCALE
VERTICAL: 1"= ####
HORIZONTAL: 1"= ####

JOB NUMBER
227521-0001309.05

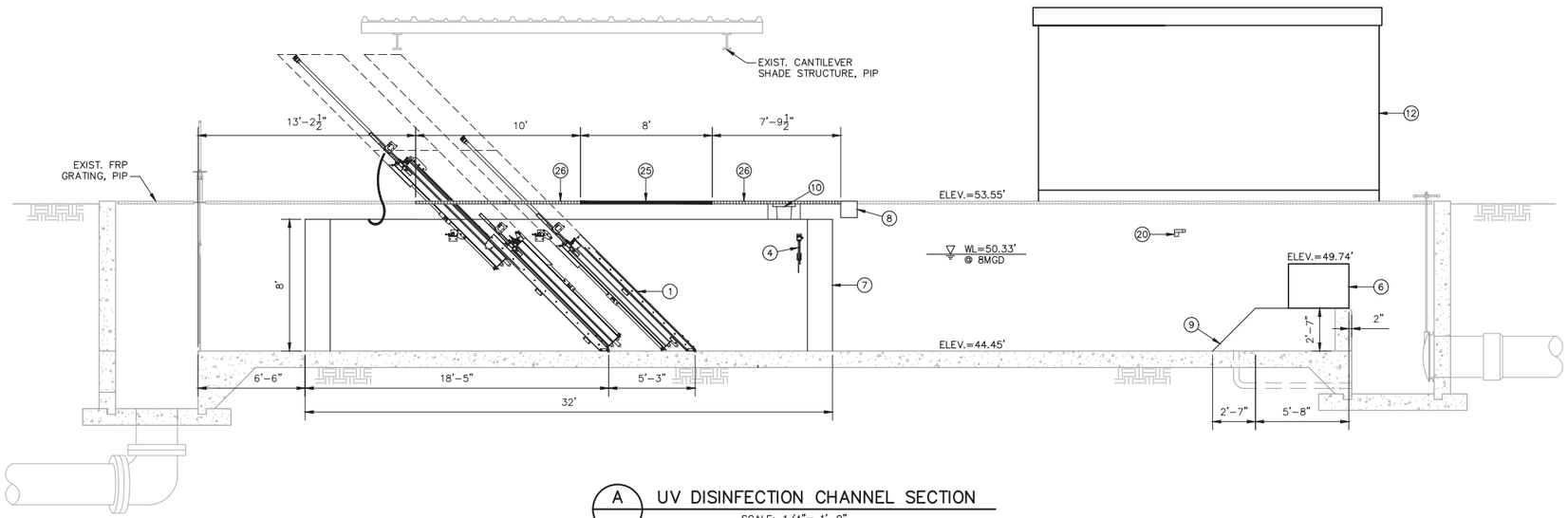

A UV DISINFECTION CHANNEL SECTION

SCALE: 1/4"= 1'-0"

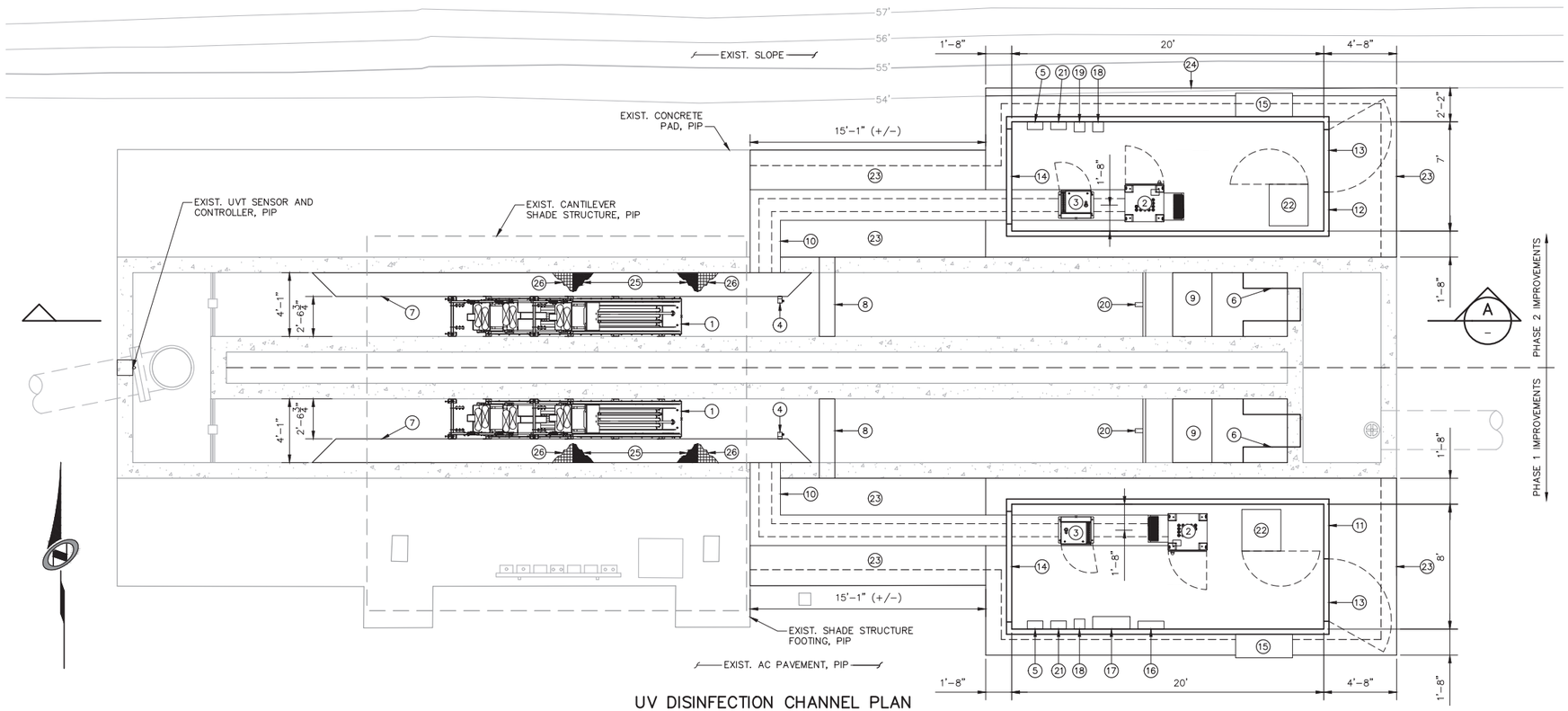

UV DISINFECTION CHANNEL PLAN

SCALE: 1/4"= 1'-0"

MATERIALS LIST

1. TROJANUVSIGNA DISINFECTION UNIT, BY TROJAN, SEE NOTES 1 AND 2
2. UV POWER DISTRIBUTION CENTER (PDC), BY TROJAN, SEE NOTE 2
3. UV HYDRAULIC SYSTEM CENTER (HSC), BY TROJAN, SEE NOTE 2
4. LOW WATER LEVEL SENSOR, BY TROJAN, SEE NOTE 2
5. LOW WATER LEVEL SENSOR CONTROL BOX, BY TROJAN, SEE NOTE 2
6. 304 SS LEVEL CONTROL WEIR WITH 137" WEIR LENGTH, SEE NOTE 3
7. CONCRETE CHANNEL REDUCTION BAFFLE, SEE STRUCTURAL DRAWINGS
8. RELOCATED CONCRETE BEAM, SEE STRUCTURAL DRAWINGS
9. CONCRETE RAMP/PAD, SEE STRUCTURAL DRAWINGS AND SEE NOTE 3
10. PRECAST CONCRETE TRENCH, SEE DETAIL 1, THIS SHEET
11. PRE-ENGINEERED BUILDING, 8' X 20' INSIDE DIMENSIONS
12. PRE-ENGINEERED BUILDING, 7' X 20' INSIDE DIMENSIONS
13. 4' WIDE X 7' TALL EXTERIOR DOOR WITH WINDOW, BY BUILDING MANUFACTURER
14. 6' LONG X 4' TALL WINDOW, BY BUILDING MANUFACTURER
15. AIR CONDITIONING UNIT, ROOF OR WALL MOUNTED, BY BUILDING MANUFACTURER
16. 480V ELECTRICAL PANEL BY BUILDING MANUFACTURER, SEE ELECTRICAL DRAWINGS
17. MINI POWER CENTER BY BUILDING MANUFACTURER, SEE ELECTRICAL DRAWINGS
18. COMMUNICATIONS JUNCTION BOX, SEE ELECTRICAL DRAWINGS
19. ELECTRICAL JUNCTION BOX, SEE ELECTRICAL DRAWINGS
20. RELOCATED WATER LEVEL (FLOW) SENSOR. SEE NOTE 4
21. RELOCATED WATER LEVEL (FLOW) SENSOR CONTROLLER. SEE NOTE 4
22. RELOCATED REFRIGERATED WATER SAMPLER
23. CONCRETE SLAB, SEE STRUCTURAL DRAWINGS AND NOTE 5.
24. 6" CONCRETE CURB, SEE STRUCTURAL DRAWINGS
25. REPLACE FRP GRATING WITH SOLID FRP COVER. MATCH EXISTING GRATING DIMENSIONS.
26. REPLACE FRP GRATING. MATCH EXISTING GRATING DIMENSIONS.

NOTES

1. SEE SPECIFICATIONS FOR CONSTRUCTION SEQUENCE. AT LEAST ONE UV DISINFECTION UNIT MUST BE IN SERVICE AT ALL TIMES DURING CONTRUCTION.
2. CONTRACTOR SHALL INSTALL ALL UV EQUIPMENT SUPPLIED BY TROJAN PER SPECIFICATIONS AND TROJAN INSTALLATION INSTRUCTIONS.
3. CONTRACTOR SHALL FIELD VERIFY EXISTING STRUCTURE DIMENSIONS PRIOR TO FABRICATION OF WEIR AND CONSTRUCTION OF RAMP. WEIR SHALL BE BY TROJAN OR AN APPROVED EQUAL.
4. CONTRACTOR SHALL REMOVE AND RE-INSTALL THE EXISTING WATER LEVEL (FLOW) SENSORS AND CONTROLLERS. FIELD VERIFY NEW LOCATION OF SENSORS WITH CITY'S FLOW INSTRUMENTATION CONSULTANT. MOUNT SENSORS ON NEW 316 SS UNISTRUT WITH 316 SS ANCHORS/HARDWARE.
5. REFER TO SPECIFICATION SECTION 02200 (EARTHWORK) FOR STRUCTURE EXCAVATION, BACKFILL, AND COMPACTION REQUIREMENTS.

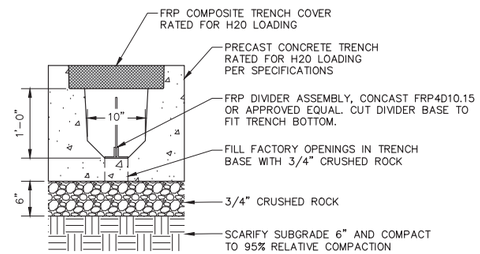

NOTE:
CONTRACTOR SHALL INSTALL ALL UV LAMP CABLES AND HYDRAULIC HOSES (NOT SHOWN) IN TRENCH PER TROJAN INSTALLATION INSTRUCTIONS.

PRECAST CONCRETE TRENCH

SCALE: 1"= 1'-0"

1

DATE: 6/27/24 TIME: 10:06:10 AM
SERVER: LAYOUT:
PATH: N:\21-0001309-05\CADD\CIVIL
DRAWING NAME: M-01.DWG
PAGE SETUP: ----
DESIGNER: APS PROJ. MGR: JOP

NO.	BY	DATE	REVISIONS:

CAUTION: The engineer preparing these plans will not be responsible for, or liable for, unauthorized changes to or uses of these plans. All changes to the plans must be in writing and must be approved by the preparer of these plans.

REGISTERED PROFESSIONAL ENGINEER JUSTIN G. PACKOS No. C 85025 Exp. 06/30/25 CIVIL STATE OF CALIFORNIA

NV5
15092 AVENUE OF SCIENCE, SUITE 200
SAN DIEGO, CA 92128
P: 858.385.0500 WWW.NV5.COM

EL CENTRO WWTP - UV DISINFECTION IMPROVEMENTS

UV UNITS - MECHANICAL PLAN

PREPARED FOR: CITY OF EL CENTRO

DATE SUBMITTED: JUNE 2024

DRAWING NUMBER M-01 OF 21 SHEETS

SCALE
VERTICAL: 1"= ####
HORIZONTAL: 1"= ####

JOB NUMBER 227521-0001309.05

STANDARD STRUCTURAL NOTES:

GENERAL NOTES:

1. NOTIFY THE OWNER OF ANY DISCREPANCIES FOUND BEFORE PROCEEDING WITH THE WORK.
2. THE CONTRACTOR SHALL NOTIFY THE OWNER OF ANY SITE CONDITIONS NOT REFLECTED ON THE DRAWINGS; OF DISCREPANCIES IN EXISTING DIMENSIONS INDICATED, CONFLICT IN GRADES, EXTENTS OF BAD SOIL, HEIGHT OF GROUNDWATER, DEPTHS OF FOUNDATIONS, ETC., AND ESPECIALLY OF UNCOVERED AND UNEXPECTED UTILITY LINES.
3. DIMENSIONS, LOCATIONS, AND SIZES OF OPENINGS IN FLOORS AND WALLS SHALL BE COORDINATED BY THE CONTRACTOR WITH ALL APPLICABLE DRAWINGS. ALL PENETRATIONS MAY NOT BE INDICATED ON STRUCTURAL DRAWINGS.
4. ALL WORK NOT DETAILED OR NOTED SHALL BE CONSTRUCTED IN ACCORDANCE WITH OTHER SIMILAR WORK SHOWN ON THE DRAWINGS AND TYPICAL DETAILS.
5. NO PIPES OR DUCTS SHALL BE PLACED IN SLABS OR WALLS UNLESS SPECIFICALLY DETAILED OR APPROVED BY THE OWNER.
6. DRAWINGS AND SPECIFICATIONS REPRESENT THE FINISHED STRUCTURE. THE CONTRACTOR SHALL BE RESPONSIBLE FOR MEANS AND METHODS OF CONSTRUCTION INCLUDING SHORING, FORMING, AND TEMPORARY BRACING. HE SHALL UNDERTAKE ALL NECESSARY MEASURES TO INSURE SAFETY OF ALL PERSONS AND STRUCTURES AT THE SITE. OBSERVATION VISITS TO THE SITE BY THE OWNER SHALL NOT INCLUDE REVIEW OF THESE MEASURES.
7. UNLESS OTHERWISE SHOWN, LOCATION OF ALL CONSTRUCTION JOINTS SHALL HAVE THE APPROVAL OF THE ENGINEER. IN FLUID RETAINING STRUCTURES, PVC WATERSTOPS SHALL BE PROVIDED IN ALL CONSTRUCTION JOINTS.

CONCRETE:

1. CONCRETE WORK SHALL CONFORM TO THE REQUIREMENTS OF CHAPTER 19 OF THE CBC, 2022 EDITION.
2. REFER TO STRUCTURAL, MECHANICAL, PLUMPING, AND ELECTRICAL DRAWINGS FOR ALL MOLDS, GROOVES, ETC., TO BE CAST IN CONCRETE.
3. REFER TO STRUCTURAL , MECHANICAL, PLUMBING, AND ELECTRICAL DRAWINGS FOR THE LOCATION OF SLEEVES, INSERTS, ETC. IN CONCRETE.
4. ALL REINFORCING BARS, ANCHOR BOLTS, AND INSERTS SHALL BE WELL SECURED PRIOR TO PLACING CONCRETE.
5. ALL HILTI ANCHOR BOLTS SHALL BE AS SPECIFIED OR EQUAL APPROVED BY THE ENGINEER. AN APPROVED EQUAL MAY BE SUBSTITUTED FOR THE HILTI ANCHOR BOLTS SPECIFIED. THE APPROVED EQUAL SHALL BE EQUAL IN MATERIALS, STRENGTH, AND INTENDED USE.
6. THE CONTRACTOR SHALL ASSURE THAT WALL REINFORCEMENT IS NOT DAMAGED BY THE INSTALLATION OF ANCHOR BOLTS.
7. STRUCTURAL CONCRETE COMPRESSIVE STRENGTH AT 28 DAYS SHALL BE AS FOLLOWS: 4000 PSI
8. ALL EXPOSED CONCRETE EDGES SHALL HAVE 3/4" CHAMFER.
9. SPECIAL INSPECTION SHALL BE REQUIRED FOR THE INSTALLATION OF ALL ANCHOR BOLTS AS SPECIFIED IN SECTION 1701 OF THE CBC, 2022 EDITION.
10. SPECIAL INSPECTION SHALL BE PROVIDED BY THE CONTRACTOR FOR ALL CONCRETE CONSTRUCTION AS SPECIFIED BY SECTION 1701 OF THE CBC, 2022 EDITION.

STRUCTURAL AND MISCELLANEOUS STEEL:

1. STEEL WORK SHALL CONFORM TO THE REQUIREMENTS OF CHAPTER 22 OF THE CBC, 2022 EDITION.
2. ALL STEEL SHAPES SHALL CONFORM TO ASTM A36 UNLESS NOTED OTHERWISE.
3. ANCHOR BOLTS NOT SPECIFIED SHALL BE 5/8" DIA. AND CONFORM TO THE MATERIAL REQUIREMENTS IN THE CONTRACT SPECIFICATIONS.
4. ALL STEEL WHICH WILL BE PERMANENTLY EXPOSED TO MOISTURE SHALL BE HOT-DIP ZINC COATED AFTER FABRICATION.
5. ALL STEEL ANCHOR BOLTS PERMANENTLY EXPOSED TO MOISTURE SHALL BE GALVANIZED, UNLESS OTHERWISE NOTED.
6. ALL WELDING DONE AFTER HOT-DIP ZINC COATING SHALL BE PROTECTED WITH TWO COATS OF ZINC – DUST OXIDE COATING.
7. STEEL FABRICATORS SHALL VERIFY ALL DIMENSIONS SHOWN ON THE STRUCTURAL PLANS AND OTHER APPLICABLE DRAWINGS.

WELDING:

A. STRUCTURAL AND MISCELLANEOUS STEEL:

1. ALL WELDING OF STRUCTURAL AND MISCELLANEOUS STEEL SHALL BE IN ACCORDANCE WITH THE PROVISIONS OF THE AMERICAN WELDING SOCIETY CODE, AWS D1.1 LATEST EDITION.
2. WELDING ELECTRODES SHALL BE E70XX LOW HYDROGEN, UNLESS OTHERWISE NOTED.
3. SPECIAL INSPECTION SHALL BE REQUIRED FOR ALL SHOP AND FIELD WELDING AS SPECIFIED IN SECTION 1701 OF THE CBC, 2022 EDITION.

REINFORCING STEEL:

1. DETAILING, FABRICATION, AND PLACEMENT OF REINFORCING BARS (UNLESS OTHERWISE NOTED) MUST FOLLOW THE AMERICAN CONCRETE INSTITUTE (ACI) MANUAL OF STANDARD PRACTICE FOR DETAILING REINFORCING CONCRETE STRUCTURES, ACI 315, LATEST EDITION.
2. ALL REINFORCING BARS SHALL CONFORM TO THE STANDARD SPECIFICATION FOR DEFORMED STEEL BARS FOR CONCRETE REINFORCEMENT, ASTM A615, GRADE 60.
3. LAP ALL SPLICES IN CONCRETE AS "CLASS B" SPLICES MINIMUM, UNLESS OTHERWISE SHOWN.
4. REINFORCING STEEL SHALL HAVE A MINIMUM CONCRETE COVER AS TABULATED BELOW UNLESS OTHERWISE NOTED.

A.	FOOTINGS AND SLABS CAST AGAINST SOIL.....	3-IN.
B.	WALLS EXPOSED TO SOIL.....	3-IN.
C.	FLUID RETAINING STRUCTURES SLABS AND BEAMS.....	3-IN.
D.	FLUID RETAINING STRUCTURES WALLS AND BAFFLES.....	3-IN.

5. WHERE CONTINUOUS BARS ARE CALLED OUT, PROVIDE CONTACT SPLICES (AS REQUIRED) IN ACCORDANCE WITH REINFORCING STEEL NOTE NO. 3.
6. ALL WELDING OF MILD STEEL SHALL BE DONE IN ACCORDANCE WITH THE LATEST AWS SPECIFICATIONS.
7. BOTTOM REINFORCEMENT OF SLABS AND BEAMS SHALL BE SUPPORTED OFF OF THE EARTH OR FORMS BY PRECAST CONCRETE BLOCKS WIRE TIED TO THE REINFORCEMENT.

ABBREVIATION LIST:

AB	ANCHOR BOLT
AC	ASPHALT CONCRETE
ALUM.	ALUMINUM
CONC.	CONCRETE
CONT.	CONTINUOUS
DIA.	DIAMETER
EL.	ELEVATION
EMB	EMBEDMENT
EXIST.	EXISTING
FRP	FIBERGLASS REINFORCED PLASTIC
FND	FOUNDATION
GA	GAUGE
GALV.	GALVANIZED
MAX	MAXIMUM
MIN	MINIMUM
N.T.S.	NOT TO SCALE
O.C.	ON CENTER
PL	PLATE
TYP.	TYPICAL
W/	WITH

SOIL AND FOUNDATIONS:

1. REFERENCE: SPECIFICATION SECTION 02200 (EARTHWORK) AND PRELIMINARY GEOTECHNICAL INVESTIGATION REPORT BY NV5, DATED MAY 3, 2017 PREPARED FOR PROPOSED BAR SCREEN STRUCTURE.
2. ALLOWABLE SOIL BEARING PRESSURE: 1500 PSI
3. NO CONCRETE OR REBAR SHALL BE PLACED IN ANY FOUNDATION UNTIL THE EXCAVATION HAS BEEN INSPECTED BY THE OWNER.
4. ALL SLEEVES THROUGH FOUNDATION WALLS OR SLABS AND UNDER FOUNDATIONS OR SLABS SHALL BE INSTALLED PRIOR TO CONCRETE PLACEMENT.
5. FOUNDATIONS AND SLABS HAVE BEEN DESIGNED IN REFERENCE TO NOTES 1 & 2 AND ARE ASSUMED TO REST ON SUITABLE BEARING MATERIALS. THE ACTUAL ADEQUACY OF THE BEARING MATERIAL SHALL BE DETERMINED BY THE OWNER'S REPRESENTATIVE PRIOR TO PLACING REINFORCEMENT OR CASTING CONCRETE.

DESIGN CRITERIA:

1. DESIGN CODE: 2022 CALIFORNIA BUILDING CODE (CBC).
2. LIVE LOADS: HS-20 LOADING OR 250 PSF.
3. SEISMIC:

   SITE CLASS: E
   RISK CATEGORY: III
   S_{DS} = 0.969
   I = 1.25

4. WIND:

   BASIC WIND SPEED = 105 MPH
   EXPOSURE C
   I = 1.25

SPECIAL INSPECTION:

1. SPECIAL INSPECTION SHALL BE PROVIDED BY THE CONTRACTOR AS SPECIFIED BY SECTION 1701 OF THE CBC, 2022 EDITION FOR:

   A. ALL CONCRETE WORK.
   B. ALL ANCHOR BOLT INSTALLATIONS INTO CONCRETE.
   C. ALL SHOP AND FIELD WELDING.

DATE: 10/28/24 TIME: 10:34:41 AM
SERVER: LAYOUT:
PATH: N:\21-0001309-05\CADD\STRUCTURE
DRAWING NAME: S-01.DWG
PAGE SETUP: ----
DESIGNER: KJM PROJ. MGR: JOP

NO.	BY	DATE	REVISIONS:

CAUTION: The engineer preparing these plans will not be responsible for, or liable for, unauthorized changes to or uses of these plans. All changes to the plans must be in writing and must be approved by the preparer of these plans.

REGISTERED PROFESSIONAL ENGINEER JACK L. ABCARIAN No. 40459 CIVIL STATE OF CALIFORNIA

NV5
15092 AVENUE OF SCIENCE, SUITE 200
SAN DIEGO, CA 92128
P: 858.385.0500 WWW.NV5.COM

EL CENTRO WWTP - UV DISINFECTION IMPROVEMENTS
STRUCTURAL NOTES

PREPARED FOR: CITY OF EL CENTRO DATE SUBMITTED: JUNE 2024

DRAWING NUMBER S-01
OF 21 SHEETS
SCALE
VERTICAL: 1"= N/A
HORIZONTAL: 1"= N/A
JOB NUMBER 227521-0001309.05

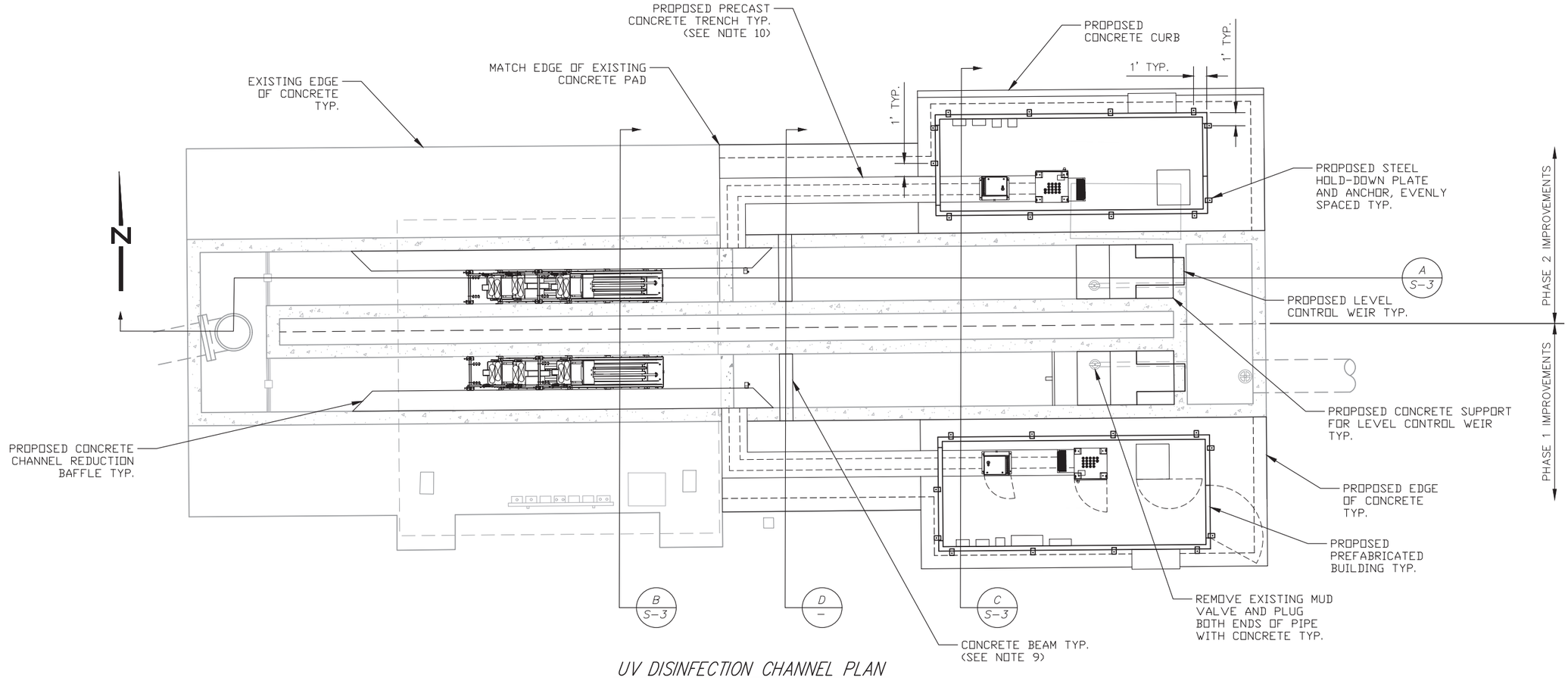

UV DISINFECTION CHANNEL PLAN

SCALE 1/4"=1'-0"

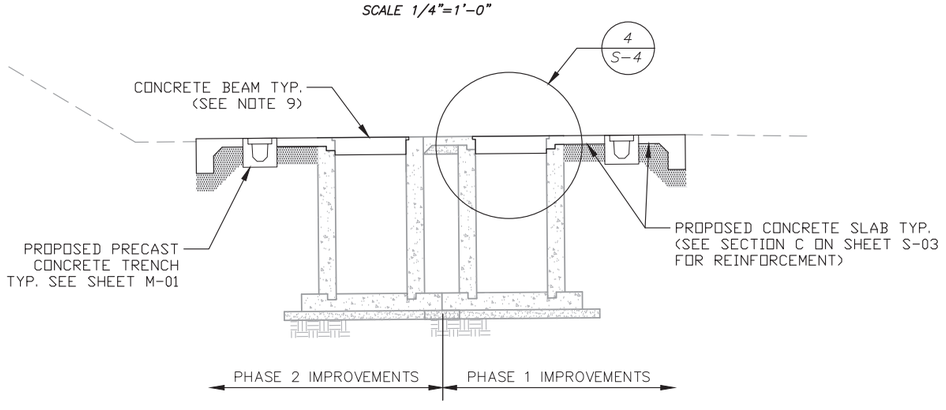

SECTION D –

SCALE 1/4"=1'-0"

NOTES:

1. *FOR REINFORCING AND ANCHORAGE DETAILS, SEE SHEETS S-03 & S-04.*
2. *SEE SHEET D-01 FOR DEMOLITION PLAN.*
3. *FOR INFORMATION AND DIMENSIONS NOT SHOWN, SEE SHEET M-01 MECHANICAL PLAN.*
4. *SEE ELECTRICAL SHEETS FOR POWER AND CONTROL CONNECTIONS.*
5. *SEE SPECIFICATIONS FOR CONSTRUCTION SEQUENCE. AT LEAST ONE UV DISINFECTION UNIT MUST BE IN SERVICE AT ALL TIMES DURING CONSTRUCTION.*
6. *CONTRACTOR SHALL INSTALL ALL UV EQUIPMENT SUPPLIED BY TROJAN PER SPECIFICATIONS AND TROJAN INSTALLATION INSTRUCTIONS.*
7. *CONTRACTOR SHALL FIELD VERIFY EXISTING STRUCTURE DIMENSIONS PRIOR TO FABRICATION OF WEIR AND CONSTRUCTION OF RAMP. WEIR SHALL BE BY TROJAN OR AN APPROVED EQUAL.*
8. *CONTRACTOR SHALL REMOVE AND RE-INSTALL THE EXISTING WATER LEVEL (FLOW) SENSORS AND CONTROLLERS. FIELD VERIFY NEW LOCATION OF SENSORS WITH CITY'S FLOW INSTRUMENTATION CONSULTANT. MOUNT SENSORS ON NEW 316 SS UNISTRUT WITH 316 SS ANCHORS/HARDWARE.*
9. *THE NEW CONCRETE BEAM MUST BE CONSTRUCTED PRIOR TO DEMOLITION OF THE EXISTING CONCRETE BEAM.*
10. *THE PRECAST CONCRETE TRENCH SHALL BE INSTALLED PRIOR TO PLACING THE PROPOSED CONCRETE SLAB. THE CONTRACTOR SHALL ENSURE THAT NO CONCRETE GETS INTO THE PRECAST TRENCH WHILE POURING SLAB CONCRETE.*

UTILITY WARNING

THE UNDERGROUND UTILITIES SHOWN HAVE BEEN LOCATED FROM EXISTING DRAWINGS AND INFORMATION FROM CITY PERSONNEL. THE ENGINEER MAKES NO GUARANTEE THAT THE UNDERGROUND UTILITIES SHOWN COMPRISE ALL SUCH UTILITIES IN THE AREA, EITHER IN SERVICE OR ABANDONED. THE ENGINEER FURTHER DOES NOT WARRANT THAT THE UNDERGROUND UTILITIES SHOWN ARE IN THE EXACT LOCATION INDICATED ALTHOUGH THE ENGINEER DOES CERTIFY THAT THEY ARE LOCATED AS ACCURATELY AS POSSIBLE FROM INFORMATION AVAILABLE. THE ENGINEER HAS NOT PHYSICALLY LOCATED THE UNDERGROUND UTILITIES. IT IS THE CONTRACTOR'S RESPONSIBILITY TO INVESTIGATE THE AREA OF THE PROPOSED CONSTRUCTION PRIOR TO BEGINNING ANY EXCAVATION, TO LOCATE ALL UNDERGROUND UTILITIES, SHOWN OR NOT SHOWN ON THESE DRAWINGS.

DATE: 10/28/24 TIME: 10:34:46 AM
SERVER: LAYOUT:
PATH: N:\21-0001309-05\CADD\STRUCTURE
DRAWING NAME: S-02.DWG
PAGE SETUP: ----
DESIGNER: KJM PROJ. MGR: JOP

NO.	BY	DATE	REVISIONS:

CAUTION: The engineer preparing these plans will not be responsible for, or liable for, unauthorized changes to or uses of these plans. All changes to the plans must be in writing and must be approved by the preparer of these plans.

REGISTERED PROFESSIONAL ENGINEER JACK L. ABCARIAN No. 40459 CIVIL STATE OF CALIFORNIA

NV5
15092 AVENUE OF SCIENCE, SUITE 200
SAN DIEGO, CA 92128
P: 858.385.0500 WWW.NV5.COM

EL CENTRO WWTP - UV DISINFECTION IMPROVEMENTS
STRUCTURAL PLAN

PREPARED FOR: CITY OF EL CENTRO **DATE SUBMITTED: JUNE 2024**

DRAWING NUMBER **S-02** OF **21** SHEETS
SCALE VERTICAL: 1"= N/A HORIZONTAL: 1"= N/A
JOB NUMBER **227521-0001309.05**

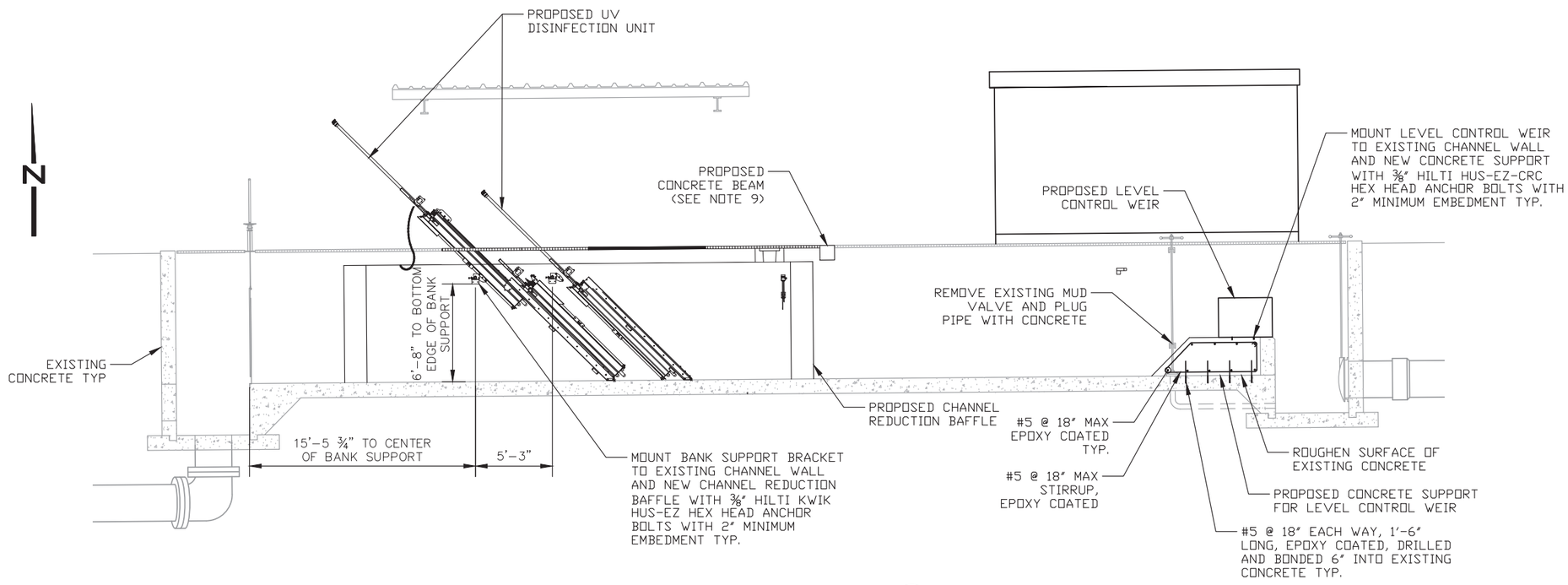

UV DISINFECTION CHANNEL SECTION (A / S-2)

SCALE 1/4"=1'-0"

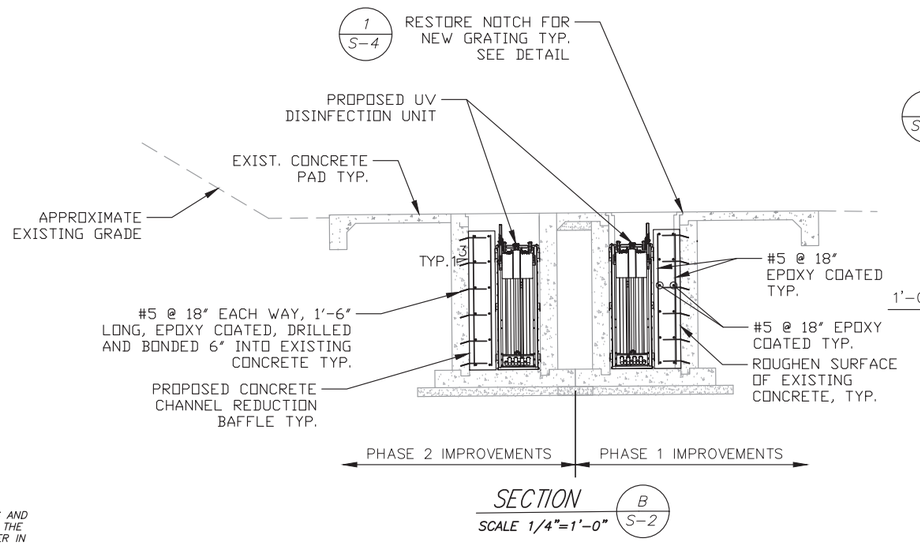

SECTION (B / S-2)

SCALE 1/4"=1'-0"

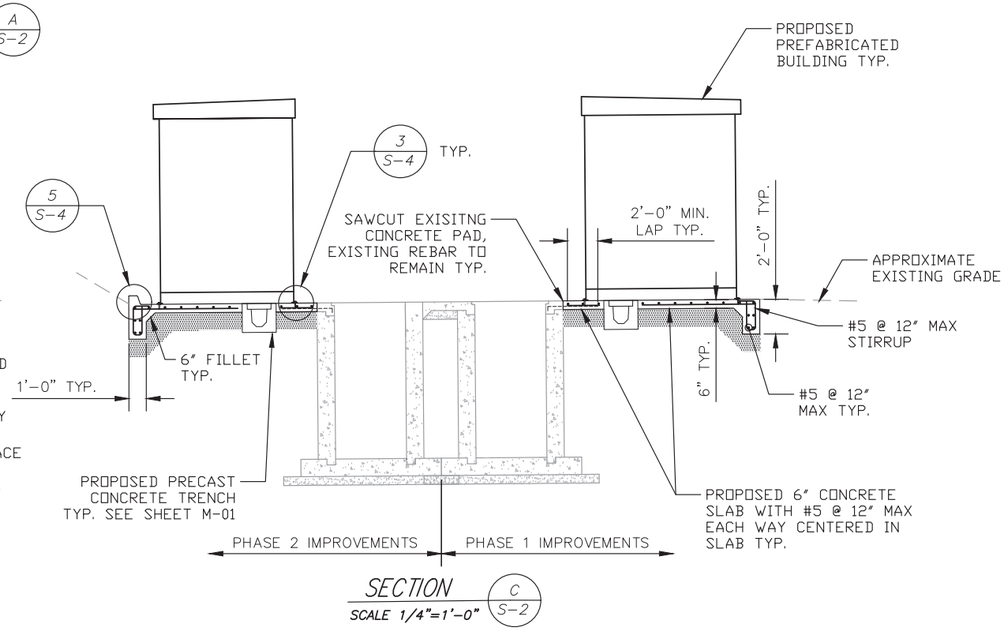

SECTION (C / S-2)

SCALE 1/4"=1'-0"

NOTES:

1. *FOR REINFORCING AND ANCHORAGE DETAILS NOT SHOWN, SEE SHEET S-04.*
2. *SEE SHEET D-01 FOR DEMOLITION PLAN.*
3. *FOR INFORMATION AND DIMENSIONS NOT SHOWN, SEE SHEET M-01 MECHANICAL PLAN.*
4. *SEE ELECTRICAL SHEETS FOR POWER AND CONTROL CONNECTIONS.*
5. *SEE SPECIFICATIONS FOR CONSTRUCTION SEQUENCE. AT LEAST ONE UV DISINFECTION UNIT MUST BE IN SERVICE AT ALL TIMES DURING CONSTRUCTION.*
6. *CONTRACTOR SHALL INSTALL ALL UV EQUIPMENT SUPPLIED BY TROJAN PER SPECIFICATIONS AND TROJAN INSTALLATION INSTRUCTIONS.*
7. *CONTRACTOR SHALL FIELD VERIFY EXISTING STRUCTURE DIMENSIONS PRIOR TO FABRICATION OF WEIR AND CONSTRUCTION OF RAMP. WEIR SHALL BE BY TROJAN OR AN APPROVED EQUAL.*
8. *CONTRACTOR SHALL REMOVE AND RE-INSTALL THE EXISTING WATER LEVEL (FLOW) SENSORS AND CONTROLLERS. FIELD VERIFY NEW LOCATION OF SENSORS WITH CITY'S FLOW INSTRUMENTATION CONSULTANT. MOUNT SENSORS ON NEW 316 SS UNISTRUT WITH 316 SS ANCHORS/HARDWARE.*
9. *THE NEW CONCRETE BEAM MUST BE CONSTRUCTED PRIOR TO DEMOLITION OF THE EXISTING CONCRETE BEAM.*
10. *THE PRECAST CONCRETE TRENCH SHALL BE INSTALLED PRIOR TO PLACING THE PROPOSED CONCRETE SLAB. THE CONTRACTOR SHALL ENSURE THAT NO CONCRETE GETS INTO THE PRECAST TRENCH WHILE POURING SLAB CONCRETE.*

UTILITY WARNING

THE UNDERGROUND UTILITIES SHOWN HAVE BEEN LOCATED FROM EXISTING DRAWINGS AND INFORMATION FROM CITY PERSONNEL. THE ENGINEER MAKES NO GUARANTEE THAT THE UNDERGROUND UTILITIES SHOWN COMPRISE ALL SUCH UTILITIES IN THE AREA, EITHER IN SERVICE OR ABANDONED. THE ENGINEER FURTHER DOES NOT WARRANT THAT THE UNDERGROUND UTILITIES SHOWN ARE IN THE EXACT LOCATION INDICATED ALTHOUGH THE ENGINEER DOES CERTIFY THAT THEY ARE LOCATED AS ACCURATELY AS POSSIBLE FROM INFORMATION AVAILABLE. THE ENGINEER HAS NOT PHYSICALLY LOCATED THE UNDERGROUND UTILITIES. IT IS THE CONTRACTOR'S RESPONSIBILITY TO INVESTIGATE THE AREA OF THE PROPOSED CONSTRUCTION PRIOR TO BEGINNING ANY EXCAVATION, TO LOCATE ALL UNDERGROUND UTILITIES, SHOWN OR NOT SHOWN ON THESE DRAWINGS.

DATE: 10/28/24 TIME: 10:34:52 AM
SERVER: LAYOUT:
PATH: N:\21-0001309-05\CADD\STRUCTURE
DRAWING NAME: S-03.DWG
PAGE SETUP: ----
DESIGNER: KJM PROJ. MGR: JOP

NO.	BY	DATE	REVISIONS:

CAUTION: The engineer preparing these plans will not be responsible for, or liable for, unauthorized changes to or uses of these plans. All changes to the plans must be in writing and must be approved by the preparer of these plans.

REGISTERED PROFESSIONAL ENGINEER — JASON L. ABCARIAN — No. 40459 — CIVIL — STATE OF CALIFORNIA

NV5
15092 AVENUE OF SCIENCE, SUITE 200
SAN DIEGO, CA 92128
P: 858.385.0500 WWW.NV5.COM

EL CENTRO WWTP - UV DISINFECTION IMPROVEMENTS

STRUCTURAL SECTIONS

PREPARED FOR: CITY OF EL CENTRO

DATE SUBMITTED: JUNE 2024

DRAWING NUMBER S-03
OF 21 SHEETS
SCALE
VERTICAL: 1"= N/A
HORIZONTAL: 1"= N/A
JOB NUMBER 227521-0001309.05

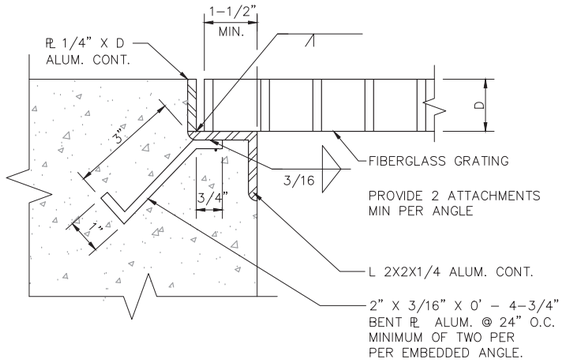

GRATING SUPPORT DETAIL 1/—

N.T.S.

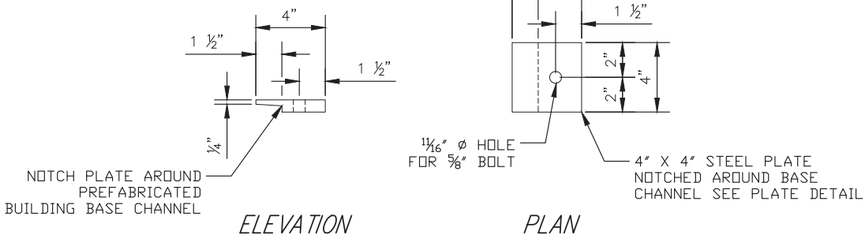

ELEVATION PLAN

PLATE DETAIL 2/—

SCALE 2" = 1'-0"

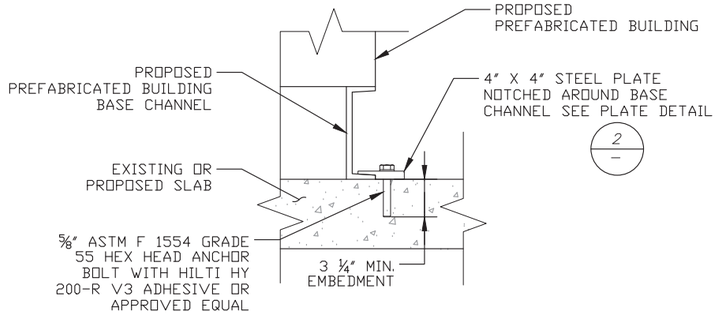

PREFABRICATED BUILDING ANCHORAGE DETAIL 3/S-3

SCALE 2" = 1'-0"

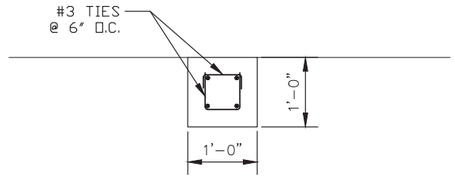

SECTION A/—

SCALE 1" = 1'-0"

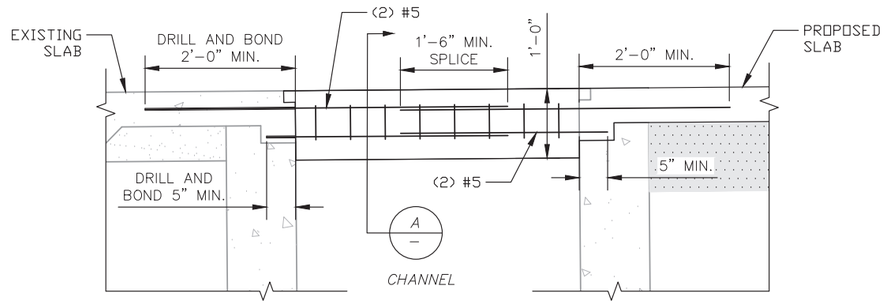

NOTE: SOUTH UV CHANNEL BEAM SHOWN,
NORTH UV CHANNEL BEAM SIMILAR.

UV DISINFECTION UNIT CROSS BEAM DETAILS 4/S-2

SCALE 1" = 1'-0"

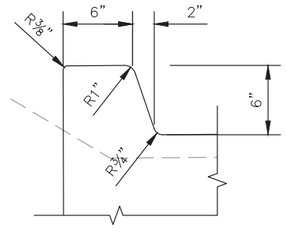

CURB DETAIL 5/S-2

SCALE 2" = 1'-0"

DATE: 10/28/24 TIME: 10:35:01 AM
SERVER: LAYOUT:
PATH: N:\21-0001309-05\CADD\STRUCTURE
DRAWING NAME: S-04.DWG
PAGE SETUP: ----
DESIGNER: KJM PROJ. MGR: JOP

NO.	BY	DATE	REVISIONS:

CAUTION: The engineer preparing these plans will not be responsible for, or liable for, unauthorized changes to or uses of these plans. All changes to the plans must be approved by the preparer of these plans.

REGISTERED PROFESSIONAL ENGINEER JACK J. ABCARIUS No. 40459 CIVIL STATE OF CALIFORNIA

NV5
15092 AVENUE OF SCIENCE, SUITE 200
SAN DIEGO, CA 92128
P: 858.385.0500 WWW.NV5.COM

EL CENTRO WWTP - UV DISINFECTION IMPROVEMENTS
STRUCTURAL DETAILS

PREPARED FOR: CITY OF EL CENTRO DATE SUBMITTED: JUNE 2024

DRAWING NUMBER S-04
OF 21 SHEETS
SCALE
VERTICAL: 1"= N/A
HORIZONTAL: 1"= N/A
JOB NUMBER 227521-0001309.05

LIGHTING LEGEND

	LIGHTING FIXTURE – SURFACE (CEILING)
	LIGHTING FIXTURE – RECESSED
	WALL MOUNTED FIXTURE
	2x2 RECESSED FIXTURE
	2x4 RECESSED FIXTURE
	1x4 RECESSED FIXTURE
	2x2 SURFACE MOUNTED FIXTURE
	2x4 SURFACE MOUNTED FIXTURE
	1X4 SURFACE MOUNTED FIXTURE
	PENDANT MOUNTED FIXTURE
	WALL MOUNTED FIXTURE
	STRIP FIXTURE
	TRACK LIGHTING SYSTEM
	POLE MOUNTED AREA LIGHT
	EXIT SIGN – CEILING MOUNTED (SOLID INDICATES EXIT SIGN FACING)
	EXIT SIGN – WALL MOUNTED (SOLID INDICATES EXIT SIGN FACING)
	EMERGENCY LIGHT
	EMERGENCY LIGHT REMOTE HEAD
	LIGHT FIXTURE W/ EMERGENCY BATTERY
	PHOTOCELL, AS NOTED
$	SINGLE POLE SWITCH +48" U.O.N.
$K	KEY OPERATED SWITCH +48" U.O.N.
$D	DIMMER SWITCH, AS NOTED, +48" U.O.N.
$3 $4	3–WAY & 4–WAY SWITCH +48" U.O.N.
$PL	SINGLE POLE SWITCH W/ PILOT LIGHT (PL "ON" WHEN LIGHT IS "OFF" – U.O.N.) + 48" U.O.N.
$OS2	OCCUPANCY SENSOR – WALL MOUNTED (2 INDICATES DUAL – CIRCUIT)
OS	OCCUPANCY SENSOR – CEILING MOUNTED
OS	OCCUPANCY SENSOR – WALL MOUNTED

POWER LEGEND

	ELECTRIC METER
	PANELBOARD
M	MOTOR CONNECTION
G	GENERATOR
$T	FRACTIONAL HP MOTOR DISCONNECT SWITCH W/INTEGRAL THERMAL PROTECTION
	DISCONNECT SWITCH
	FUSED DISCONNECT SWITCH
	COMBINATION MOTOR STARTER DISCONNECT
	EQUIPMENT CONNECTION
T	TRANSFORMER

WIRING DEVICES LEGEND

	RECEPTACLE – SINGLE +18" U.O.N.
	RECEPTACLE – DUPLEX +18" U.O.N.
	RECEPTACLE – QUAD +18" U.O.N.
	RECEPTACLE – SPLIT WIRED +18" U.O.N.
GFCI	RECEPTACLE – GFCI OR ON GFI CIRCUIT
GFCI	RECEPTACLE – QUAD – GFCI ON GFI CIRCUIT +18" U.O.N.
	RECEPTACLE – 220V +18" U.O.N.
	RECEPTACLE – HIGH VOLTAGE
	RECEPTACLE – SPECIAL +18" U.O.N.
	RECEPTACLE – FLOOR MOUNTED
	RECEPTACLE – CEILING MOUNTED
	JUNCTION BOX
	PUSH BUTTON
W	PLUG MOLD
	POWER POLE

WIRING CIRCUITS LEGEND

	CONDUIT – CONCEALED
	CONDUIT – EXPOSED
	CONDUIT – UNDERGROUND
	CONDUIT – FLEX
A–2	HOMERUN (PANEL AND CIRCUIT #)
	CONDUIT STUB–UP
	CONDUIT STUB–DN

FIRE ALARM SYSTEM LEGEND

F	FA MANUAL PULL STATION
	FA HORN STROBE
	FA STROBE
M	MAGNETIC DOOR HOLD OPEN
135°F	FA HEAT DETECTOR (FIXED TEMP. NOTED)
I	SMOKE DETECTOR – IONIZATION TYPE
P/CO/A	SMOKE /CO DETECTOR – PHOTO ELECTRIC TYPE W/AUDIO
P	SMOKE DETECTOR – PHOTO ELECTRIC TYPE
P	SMOKE DETECTOR – DUCT MOUNTED
S	FA SPEAKER
FACP	FIRE ALARM CONTROL PANEL
FAAP	FIRE ALARM ANNUNCIATOR PANEL

COMMUNICATIONS LEGEND

	TELECOM OUTLET, 2 JACKS UON
	TELECOM OUTLET – FLOOR MOUNTED, 2 JACKS UON
	TELECOM OUTLET – CEILING MOUNTED, 2 JACKS UON
	EXISTING TELECOM AND/OR DATA OUTLET
TV	TELEVISION OUTLET
S	SPEAKER – WALL MOUNTED
S	SPEAKER – CEILING MOUNTED
	BELL
S C	SPEAKER / CLOCK
	CLOCK – WALL MOUNTED
	CLOCK – CEILING MOUNTED
TTB	TELEPHONE TERMINAL BOARD

SECURITY LEGEND

	WALL MOUNT CCTV
	RECESSED CEILING MOUNT CCTV WITH DOME
	CEILING MOUNT DOME
	RACK
G	GLASS BREAK SENSOR
D	MAGNETIC DOOR SENSOR
M	MOTION SENSOR
KP K	KEYPAD
RIM	REMOTE ALARM INPUT MODULE
CR	CARD READER
ACU	NETWORKED INTELLIGENT CONTROLLER

LINE TYPE LEGEND

———	EXISTING
———	NEW
– – – – –	DEMOLITION

THIS IS A STANDARD (TYPICAL) SYMBOLS LIST. NOT ALL SYMBOLS ARE NECESSARILY USED ON THIS PROJECT. ALSO, ADDITIONAL SYMBOLS MAY BE INTRODUCED ON DRAWINGS AND DEFINED THEREIN.

GENERAL ELECTRICAL NOTES

(APPLICABLE TO ALL ELECTRICAL DRAWINGS)

A. CONTRACTOR IS STRONGLY ENCOURAGED TO VISIT AND CAREFULLY EXAMINE THOSE PORTIONS OF THE SITE AFFECTED BY THIS WORK BEFORE SUBMITTING PROPOSALS, SO AS TO BECOME FAMILIAR WITH EXISTING CONDITIONS AND DIFFICULTIES THAT WILL AFFECT EXECUTION OF THE WORK.

B. ALL ELECTRICAL WORK AND MATERIALS MUST CONFORM TO THE LATEST STANDARDS FOR THE NATIONAL ELECTRICAL CODE AND ANY OTHER APPLICABLE CODES. MATERIALS SHALL BE LISTED BY THE UNDERWRITER'S LABORATORIES, INC. SHOULD PLANS AND CODES CONFLICT, THE CODE TAKES PREFERENCE. MAKE NO CHANGES, EVEN IN CASE OF CONFLICT, WITHOUT FIRST OBTAINING APPROVAL OF THE ELECTRICAL ENGINEER.

C. PROVIDE AS USED HERE ON THE DRAWINGS, PROVIDE IS AN ALL–INCLUSIVE TERM REQUIRING CONTRACTOR TO FURNISH, INSTALL, WIRE AND CONNECT ALL SPECIFIED EQUIPMENT AS WELL AS COMPONENTS, ACCESSORIES, WIRING, AND MOUNTING HARDWARE TO INSURE THAT SPECIFIED EQUIPMENT FUNCTIONS TO MEET SYSTEM(S) REQUIREMENTS.

D. UNLESS OTHERWISE NOTED, ALL POWER CIRCUIT CONDUCTORS SHALL BE COPPER AND MINIMUM #12 AWG IN 3/4" EMT CONDUIT.

E. A GREEN, COPPER GROUND WIRE SHALL BE INSTALLED IN ALL CONDUIT SYSTEMS AND SHALL BE BONDED TO ALL ENCLOSURES, BOXES, AND EQUIPMENT.

F. EXISTING CONDITIONS AND UTILITIES INDICATED ARE TAKEN FROM EXISTING CONSTRUCTION DOCUMENTS, VARIOUS SURVEYS, AND FIELD INVESTIGATIONS.

G. IT SHALL BE THE RESPONSIBILITY OF THE CONTRACTOR TO PROTECT EXISTING UTILITIES FROM DAMAGE. THE CONTRACTOR SHALL BEAR ALL EXPENSE FOR REPAIR OR REPLACEMENT OF UTILITIES OR OTHER PROPERTY DAMAGED BY OPERATIONS IN CONJUNCTION WITH THE COMPLETION OF THIS WORK.

PHASING OF PROJECT

DUE TO THE NATURE OF WORK THAT IS TO BE DONE, THIS PROJECT WILL HAVE TO BE DONE IN PHASES. THERE ARE CURRENTLY TWO CHANNELS WITH AN EXISTING REACTOR IN EACH. THERE WILL NEED TO BE ONE REACTOR ON AT ALL TIMES TO ENSURE CONTINUED WASTEWATER TREATMENT. A MAXIMUM OF 72 HOURS, AT THE CONSENT OF THE OWNER, WILL BOTH REACTORS BE ALLOWED TO BE OFFLINE AT THE SAME TIME. IF MORE TIME IS NEEDED, THE OWNER WILL NEED TO AGREE TO THE TIMELINE PRIOR TO TAKING BOTH REACTORS OFFLINE. THE TWO PHASES OF WORK WILL BE PHASE 1 AND PHASE 2. PHASE 1 WILL CONSIST OF THE DEMOLITION OF ALL THE CORRESPONDING ELECTRICAL COMPONENTS RELATED TO THE EXISTING SOUTH SIDE REACTOR AND THE CONSTRUCTION OF THE NEW DISTRIBUTION SYSTEM WHICH WILL POWER THE NEW REACTOR FOR THE SOUTH SIDE CHANNEL. THE EXISTING NORTH SIDE REACTOR WILL BE ONLINE AND OPERATIONAL DURING PHASE 1. PHASE 2 WILL CONSIST OF THE DEMOLITION OF ALL THE CORRESPONDING ELECTRICAL COMPONENTS RELATED TO THE EXISTING NORTH SIDE REACTOR AND THE ROUTING AND TRENCHING OF THE NEW POWERING EQUIPMENT WHICH WILL POWER THE NEW REACTOR FOR THE NORTH SIDE CHANNEL. THE NEW SOUTH SIDE REACTOR WILL BE ONLINE AND OPERATIONAL DURING THIS TIME.

DATE: _____ TIME: _____
SERVER: _____ LAYOUT: _____
PATH: _____
DRAWING NAME: _____
PAGE SETUP: _____
DESIGNER: _____ PROJ. MGR: _____

NO.	BY	DATE	REVISIONS:

CAUTION: *The engineer preparing these plans will not be responsible for, or liable for, unauthorized changes to or uses of these plans. All changes to the plans must be in writing and must be approved by the preparer of these plans.*

REGISTERED PROFESSIONAL ENGINEER — John Maffett — No. 22658 — Exp. 03/31/25 — ELECTRICAL — STATE OF CALIFORNIA

NV5
15092 AVENUE OF SCIENCE, SUITE 200
SAN DIEGO, CA 92128
P: 858.385.0500 WWW.NV5.COM

EL CENTRO WWTP – UV DISINFECTION IMPROVEMENTS

ELECTRICAL SYMBOLS LEGEND & PHASING

PREPARED FOR: CITY OF EL CENTRO

DATE SUBMITTED: JUNE 2024

DRAWING NUMBER E-01
OF 21 SHEETS
SCALE
VERTICAL: 1"=
HORIZONTAL: 1"=
JOB NUMBER 227521-0001309.05

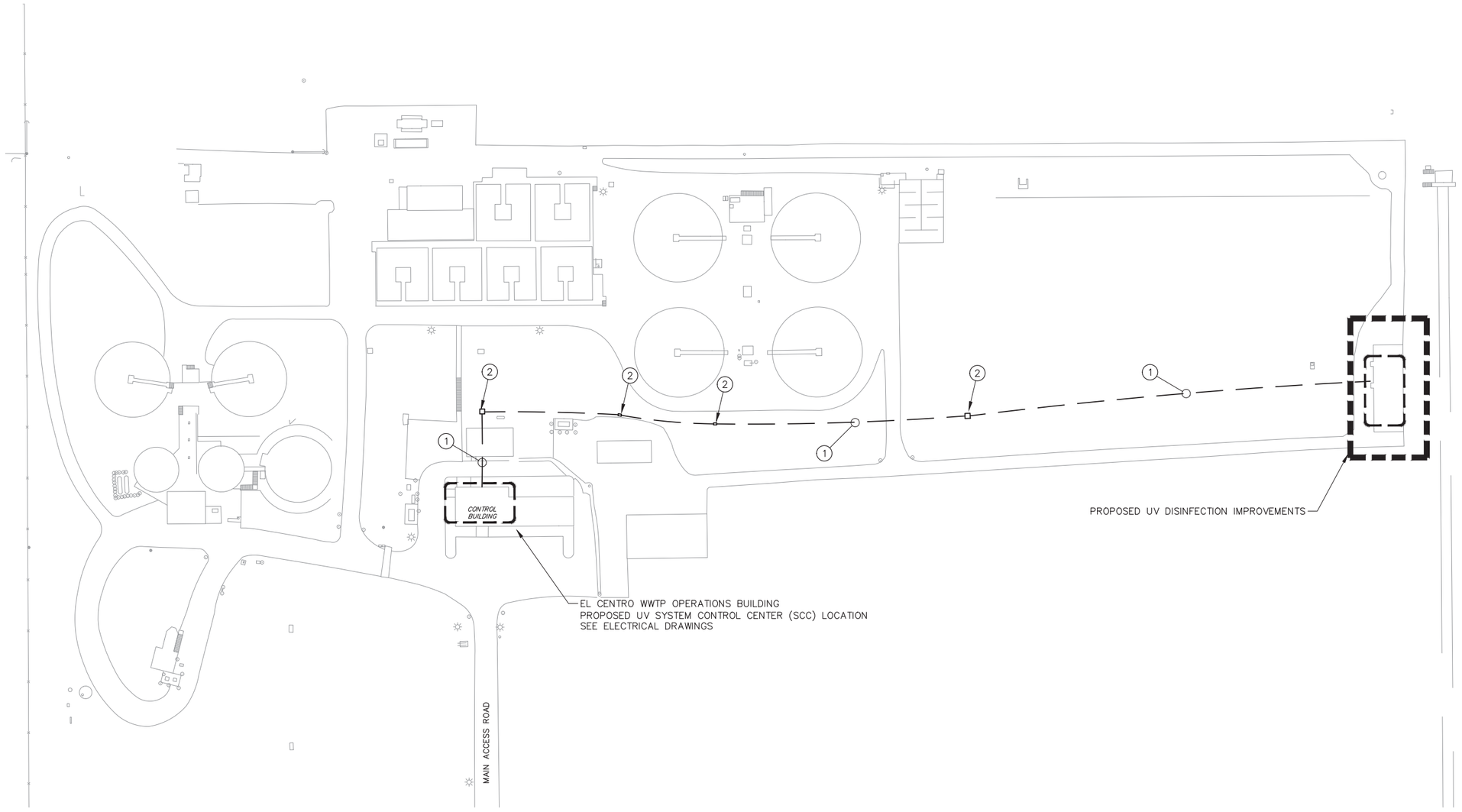

SITE MAP

SCALE: 1"= 50'

KEYED NOTES

1. EXISTING ELECTRICAL SERVICE AND COMMUNICATIONS CONDUIT (2) 3 ½" POWER AND (2) 2" COMM, SHALL REMAIN AND BE MAINTAINED AS IS UNLESS OTHERWISE NOTED.
2. EXISTING ELECTRICAL SERVICE AND COMMUNICATIONS MANHOLES AND JUNCTION BOXES SHALL REMAIN AND BE MAINTAINED AS IS UNLESS OTHERWISE NOTED.

DATE: _____ TIME: _____
SERVER: _____ LAYOUT: _____
PATH: _____
DRAWING NAME: _____
PAGE SETUP: _____
DESIGNER: _____ PROJ. MGR: _____

NO.	BY	DATE	REVISIONS:

CAUTION: The engineer preparing these plans will not be responsible for, or liable for, unauthorized changes to or uses of these plans. All changes to the plans must be in writing and must be approved by the preparer of these plans.

REGISTERED PROFESSIONAL ENGINEER
JOHN L. MOFFATT
No. 22635
Exp. 03/31/25
ELECTRICAL
STATE OF CALIFORNIA

NV5
15092 AVENUE OF SCIENCE, SUITE 200
SAN DIEGO, CA 92128
P: 858.385.0500 WWW.NV5.COM

EL CENTRO WWTP – UV DISINFECTION IMPROVEMENTS
SITE ELECTRICAL PLAN

PREPARED FOR: CITY OF EL CENTRO
DATE SUBMITTED: JUNE 2024

DRAWING NUMBER E-02
OF 21 SHEETS
SCALE
VERTICAL: 1"=
HORIZONTAL: 1"=
JOB NUMBER 227521-0001309.05

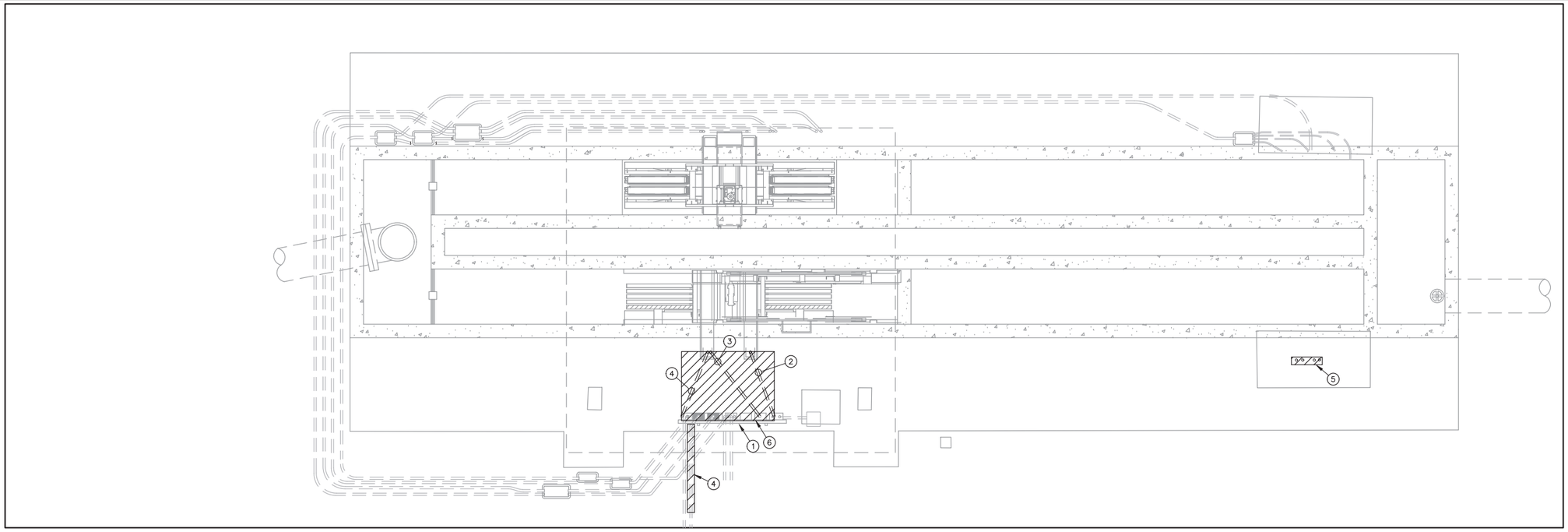

DISINFECTION FACILITY PHASE 1 DEMOLITION PLAN

SCALE: 1/4" = 1'-0"

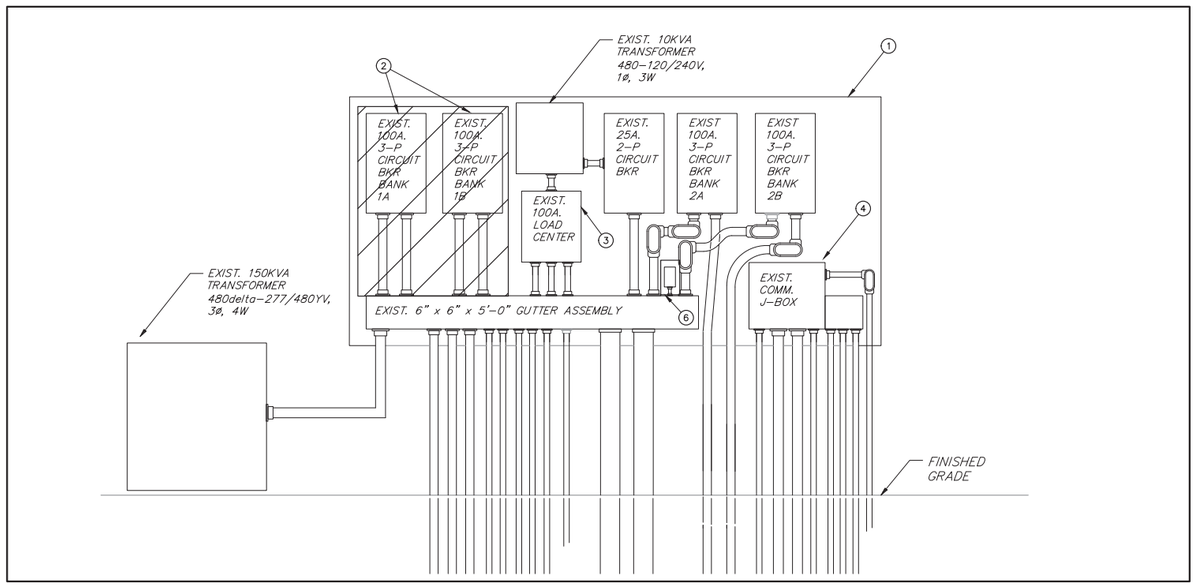

DISINFECTION SERVICE BACKBOARD ELECTRICAL ELEVATION PHASE 1 DEMOLITION DETAIL

SCALE: NTS

KEYED NOTES

1. EXISTING ELECTRICAL SERVICE BACKBOARD AND DISTRIBUTION EQUIPMENT SHALL REMAIN AND BE MAINTAINED AS IS UNLESS OTHERWISE NOTED.
2. EACH EXISTING 100A CIRCUIT BREAKER IS TO BE DEMOLISHED AND REMOVED. WIRE AND CONDUIT TO BE REMOVED BACK TO SOURCE. ALL UNDERGROUND CONDUIT SHALL BE ABANDONED IN PLACE AND EXPOSED CONDUIT WILL BE TRIMMED TO FINISHED GRADE.
3. ALL EXISTING CIRCUIT BREAKERS IN THE LOAD CENTER CONNECTING TO THE EXISTING SOUTH SIDE REACTOR MECHANICAL CONTROLS SHALL BE DEMOLISHED AND REMOVED. WIRE AND CONDUIT TO BE REMOVED BACK TO SOURCE. ALL UNDERGROUND CONDUIT SHALL BE ABANDONED IN PLACE AND EXPOSED CONDUIT WILL BE TRIMMED TO FINISHED GRADE. PRIOR TO REMOVING WIRE AND CONDUIT, IT MUST BE CONFIRMED THAT THE WIRE IS FOR THE SOUTH SIDE REACTOR MECHANICAL CONTROLS. ALL OTHER EXISTING WIRING IN THE LOAD CENTER SHALL REMAIN AND BE MAINTAINED AS IS UNLESS OTHERWISE NOTED.
4. EXISTING COMMUNICATIONS JUNCTION BOX. THE EXISTING COMMUNICATION WIRE FOR THE EXISTING SOUTH SIDE REACTOR IS TO BE REMOVED BACK TO SYSTEM CONTROL CENTER (SCC). PRIOR TO REMOVING COMMUNICATION WIRE, IT MUST BE CONFIRMED THAT THE WIRE IS FOR THE SOUTH SIDE REACTOR.
5. EXISTING POWER AND COMMUNICATION WIRE IN THE EXISTING SOUTH SIDE BUILDING IS TO BE REMOVED BACK TO SOURCE. PRIOR TO DEMOLITION, CONFIRM THE WIRING IN THE EXISTING SOUTH BUILDING IS FED FROM THE EXISTING ELECTRICAL SERVICE BACKBOARD.
6. REMOVE EXISTING RECEPTACLE AND REMOVE CONNECTING WIRE BACK TO SOURCE. THE WIRING FOR THE EXISTING LIGHTING FOR THE SHADER WILL NOT BE REMOVED BUT IT WILL BE CONNECTED TO THE NEW CIRCUIT GOING TO THE NEW PANEL BOARD IN THE NEW SOUTH BUILDING.

DATE: _____ TIME: _____
SERVER: _____ LAYOUT: _____
PATH: _____
DRAWING NAME: _____
PAGE SETUP: _____
DESIGNER: _____ PROJ. MGR: _____

NO.	BY	DATE	REVISIONS:

CAUTION: The engineer preparing these plans will not be responsible for, or liable for, unauthorized changes to or uses of these plans. All changes to the plans must be approved by the preparer of these plans.

REGISTERED PROFESSIONAL ENGINEER — John Mollett — No. 22658 — Exp. 03/31/25 — ELECTRICAL — STATE OF CALIFORNIA

NV5
15092 AVENUE OF SCIENCE, SUITE 200
SAN DIEGO, CA 92128
P: 858.385.0500 WWW.NV5.COM

EL CENTRO WWTP – UV DISINFECTION IMPROVEMENTS
PHASE 1 DEMOLITION PLAN

PREPARED FOR: CITY OF EL CENTRO

DATE SUBMITTED: JUNE 2024

DRAWING NUMBER E-03
OF 21 SHEETS
SCALE
VERTICAL: 1"=
HORIZONTAL: 1"=
JOB NUMBER 227521-0001309.05

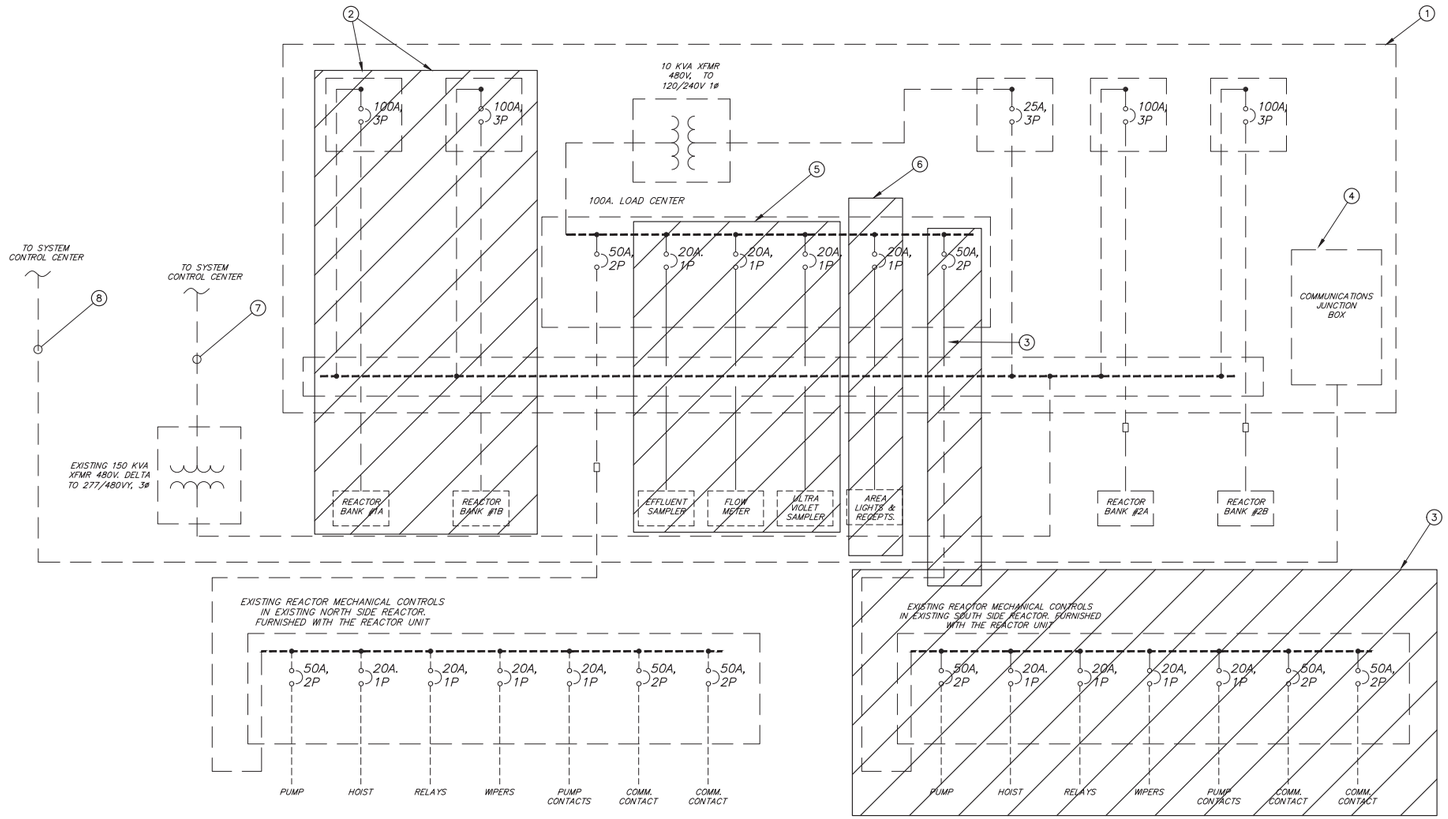

DISINFECTION FACILITY ELECTRICAL PHASE 1 DEMOLITION SINGLE LINE DIAGRAM

SCALE: NTS

KEYED NOTES

1. EXISTING ELECTRICAL SERVICE BACKBOARD AND DISTRIBUTION EQUIPMENT SHALL REMAIN AND BE MAINTAINED AS IS UNLESS OTHERWISE NOTED.
2. EACH EXISTING 100A CIRCUIT BREAKER IS TO BE DEMOLISHED AND REMOVED. WIRE AND CONDUIT TO BE REMOVED BACK TO SOURCE. ALL UNDERGROUND CONDUIT SHALL BE ABANDONED IN PLACE AND EXPOSED CONDUIT WILL BE TRIMMED TO FINISHED GRADE.
3. ALL EXISTING CIRCUIT BREAKERS IN THE LOAD CENTER CONNECTING TO THE EXISTING SOUTH SIDE REACTOR MECHANICAL CONTROLS SHALL BE DEMOLISHED AND REMOVED. WIRE AND CONDUIT TO BE REMOVED BACK TO SOURCE. ALL UNDERGROUND CONDUIT SHALL BE ABANDONED IN PLACE AND EXPOSED CONDUIT WILL BE TRIMMED TO FINISHED GRADE. PRIOR TO REMOVING WIRE AND CONDUIT, IT MUST BE CONFIRMED THAT THE WIRE IS FOR THE SOUTH SIDE REACTOR MECHANICAL CONTROLS. ALL OTHER EXISTING WIRING IN THE LOAD CENTER SHALL REMAIN AND BE MAINTAINED AS IS UNLESS OTHERWISE NOTED.
4. EXISTING COMMUNICATIONS JUNCTION BOX. THE EXISTING COMMUNICATION WIRE FOR THE EXISTING SOUTH SIDE REACTOR IS TO BE REMOVED BACK TO SYSTEM CONTROL CENTER (SCC). PRIOR TO REMOVING COMMUNICATION WIRE, IT MUST BE CONFIRMED THAT THE WIRE IS FOR THE SOUTH SIDE REACTOR.
5. EXISTING POWER AND COMMUNICATION WIRE IN THE EXISTING SOUTH SIDE BUILDING IS TO BE REMOVED BACK TO SOURCE. PRIOR TO DEMOLITION, CONFIRM THE WIRING IN THE EXISTING SOUTH BUILDING IS FED FROM THE EXISTING ELECTRICAL SERVICE BACKBOARD.
6. REMOVE EXISTING RECEPTACLE AND REMOVE WIRE BACK TO SOURCE. THE WIRING FOR THE EXISTING LIGHTING FOR THE SHADER CONNECTING WILL NOT BE REMOVED BUT IT WILL BE CONNECTED TO THE NEW CIRCUIT GOING TO THE NEW PANEL BOARD IN THE NEW SOUTH BUILDING.
7. EXISTING (2) 3 ½" POWER CONDUIT
8. EXISTING (2) 2" COMMUNICATION CONDUIT

DATE: _____ TIME: _____
SERVER: _____ LAYOUT: _____
PATH: _____
DRAWING NAME: _____
PAGE SETUP: _____
DESIGNER: _____ PROJ. MGR: _____

NO.	BY	DATE	REVISIONS:

CAUTION: The engineer preparing these plans will not be responsible for, or liable for, unauthorized changes to or uses of these plans. All changes to the plans must be in writing and must be approved by the preparer of these plans.

REGISTERED PROFESSIONAL ENGINEER JOHN L. MOFFATT No. 22658 Exp. 03/31/25 ELECTRICAL STATE OF CALIFORNIA

NV5
15092 AVENUE OF SCIENCE, SUITE 200
SAN DIEGO, CA 92128
P: 858.385.0500 WWW.NV5.COM

EL CENTRO WWTP – UV DISINFECTION IMPROVEMENTS
SINGLE LINE DIAGRAM PHASE 1 DEMOLITION PLAN

PREPARED FOR: CITY OF EL CENTRO
DATE SUBMITTED: JUNE 2024

DRAWING NUMBER E-04
OF 21 SHEETS
SCALE
VERTICAL: 1"=
HORIZONTAL: 1"=
JOB NUMBER 227521-0001309.05

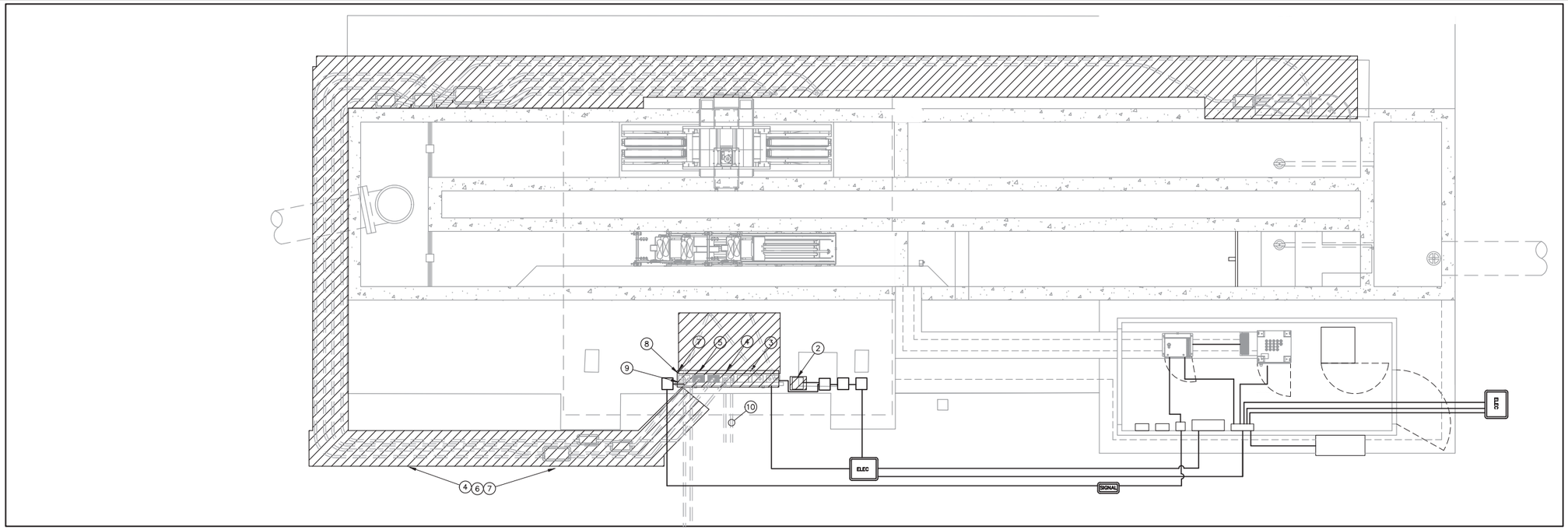

DISINFECTION FACILITY DEMOLITION PLAN PHASE 2

SCALE: 1/4" = 1'-0"

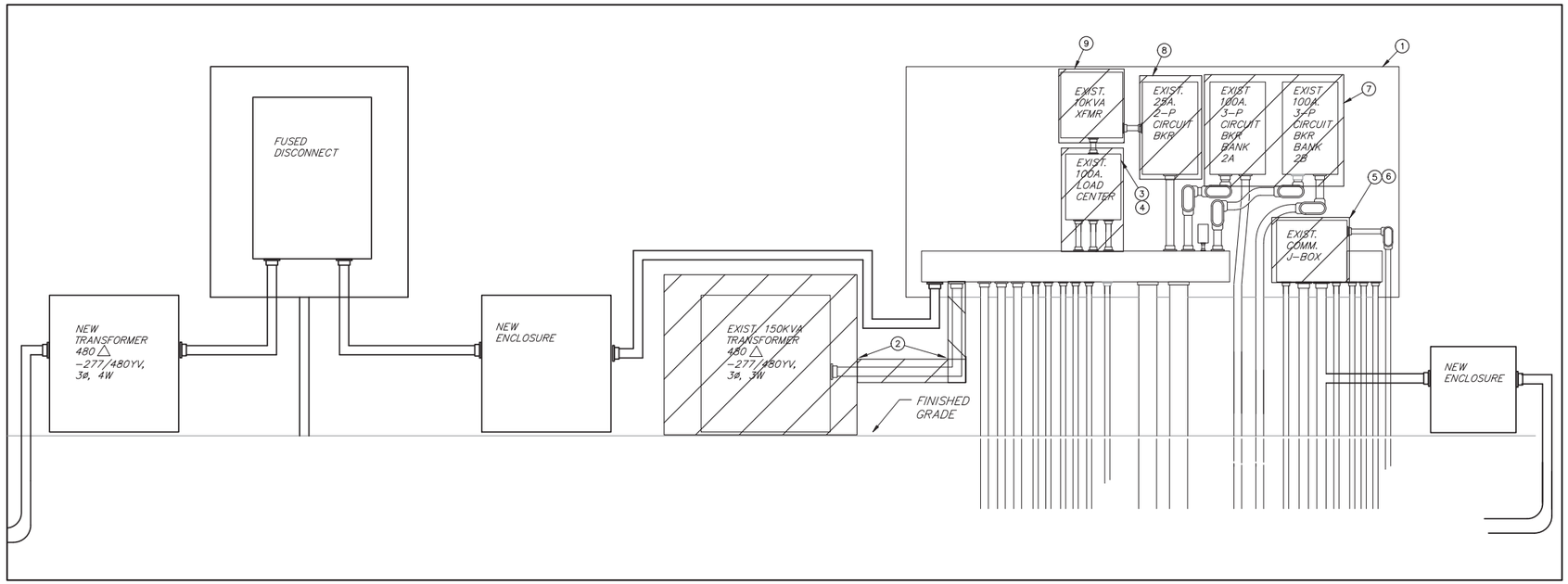

DISINFECTION SERVICE BACKBOARD DEMOLITION PLAN PHASE 2

SCALE: NTS

KEYED NOTES

1. EXISTING ELECTRICAL SERVICE BACKBOARD AND DISTRIBUTION EQUIPMENT SHALL REMAIN AND BE MAINTAINED AS IS UNLESS OTHERWISE NOTED.
2. EXISTING TRANSFORMER TO BE DEMOLISHED AND REMOVED. WIRE AND CONDUIT TO BE REMOVED BACK TO SOURCE.
3. ALL EXISTING CIRCUIT BREAKERS IN THE LOAD CENTER CONNECTING TO THE EXISTING SOUTH SIDE REACTOR MECHANICAL CONTROLS ARE TO BE ALREADY REMOVED PER DEMOLITION PHASE 1. SEE SHEET E-03 AND E-04.
4. ALL EXISTING CIRCUIT BREAKERS AND WIRE IN THE LOAD CENTER CONNECTING TO THE EXISTING NORTH SIDE REACTOR MECHANICAL CONTROLS ARE TO BE REMOVED BACK TO SOURCE. ALL UNDERGROUND CONDUIT SHALL BE ABANDONED IN PLACE AND EXPOSED CONDUIT WILL BE TRIMMED TO FINISHED GRADE. PRIOR TO REMOVING WIRE AND CONDUIT. IT MUST BE CONFIRMED THAT THE WIRE IS FOR THE NORTH SIDE REACTOR MECHANICAL CONTROLS.
5. EXISTING COMMUNICATIONS JUNCTION BOX. THE EXISTING SOUTH SIDE COMMUNICATION WIRE IS TO ALREADY BE REMOVED BACK TO SYSTEM CONTROL CENTER (SCC) PER DEMOLITION PHASE 1. SEE SHEET E-03 AND E-04.
6. EXISTING COMMUNICATIONS JUNCTION BOX. THE EXISTING NORTH SIDE COMMUNICATION WIRE TO BE REMOVED BACK TO SYSTEM CONTROL CENTER (SCC). PRIOR TO REMOVING COMMUNICATION WIRE, IT MUST BE CONFIRMED THAT THE WIRE IS FOR THE NORTH SIDE REACTOR.
7. EACH EXISTING 100A CIRCUIT BREAKER IS TO BE DEMOLISHED AND REMOVED. WIRE AND CONDUIT TO BE REMOVED BACK TO SOURCE. ALL UNDERGROUND CONDUIT CAN BE ABANDONED IN PLACE AND EXPOSED CONDUIT WILL BE TRIMMED TO FINISHED GRADE.
8. EXISTING 25A CIRCUIT BREAKER IS TO BE DEMOLISHED AND REMOVED. WIRE AND CONDUIT TO BE REMOVED BACK TO SOURCE
9. EXISTING 10KVA TRANSFORMER TO BE DEMOLISHED AND REMOVED. WIRE AND CONDUIT TO BE REMOVED BACK TO SOURCE
10. PLEASE REMOVE EXISTING SOURCE POWER CABLES THAT CONNECT FROM THE SCC TO THE UV AREA. THIS CABLE WILL HAVE ALREADY BEEN DISCONNECTED AFTER IT BEING REPLACED WITH A NEW ONE IN PHASE 1.

DATE: _____ TIME: _____
SERVER: _____ LAYOUT: _____
PATH: _____
DRAWING NAME: _____
PAGE SETUP: _____
DESIGNER: _____ PROJ. MGR: _____

NO.	BY	DATE	REVISIONS:

CAUTION: The engineer preparing these plans will not be responsible for, or liable for, unauthorized changes to or uses of these plans. All changes to the plans must be in writing and must be approved by the preparer of these plans.

REGISTERED PROFESSIONAL ENGINEER JOHN L. MOFFATT No. 22658 Exp. 03/31/25 ELECTRICAL STATE OF CALIFORNIA

NV5
15092 AVENUE OF SCIENCE, SUITE 200
SAN DIEGO, CA 92128
P: 858.385.0500 WWW.NV5.COM

EL CENTRO WWTP – UV DISINFECTION IMPROVEMENTS
PHASE 2 DEMOLITION PLAN

PREPARED FOR: CITY OF EL CENTRO
DATE SUBMITTED: JUNE 2024

DRAWING NUMBER E-05
OF 21 SHEETS
SCALE
VERTICAL: 1"=
HORIZONTAL: 1"=
JOB NUMBER 227521-0001309.05

KEYED NOTES

1. EXISTING ELECTRICAL SERVICE BACKBOARD AND DISTRIBUTION EQUIPMENT SHALL REMAIN AND BE MAINTAINED AS IS UNLESS OTHERWISE NOTED.
2. EXISTING COMMUNICATIONS JUNCTION BOX. THE EXISTING NORTH SIDE COMMUNICATION WIRE TO BE REMOVED BACK TO SYSTEM CONTROL CENTER (SCC). PRIOR TO REMOVING COMMUNICATION WIRE, IT MUST BE CONFIRMED THAT THE WIRE IS FOR THE NORTH SIDE REACTOR.
3. ALL EXISTING CIRCUIT BREAKERS AND WIRE IN THE LOAD CENTER CONNECTING TO THE EXISTING NORTH SIDE REACTOR MECHANICAL CONTROLS ARE TO BE REMOVED BACK TO SOURCE. ALL UNDERGROUND CONDUIT SHALL BE ABANDONED IN PLACE AND EXPOSED CONDUIT WILL BE TRIMMED TO FINISHED GRADE. PRIOR TO REMOVING WIRE AND CONDUIT. IT MUST BE CONFIRMED THAT THE WIRE IS FOR THE NORTH SIDE REACTOR MECHANICAL CONTROLS.
4. EACH EXISTING 100A CIRCUIT BREAKER IS TO BE DEMOLISHED AND REMOVED. WIRE AND CONDUIT TO BE REMOVED BACK TO SOURCE. ALL UNDERGROUND CONDUIT CAN BE ABANDONED IN PLACE AND EXPOSED CONDUIT WILL BE TRIMMED TO FINISHED GRADE.
5. EXISTING 25A CIRCUIT BREAKER IS TO BE DEMOLISHED AND REMOVED. WIRE AND CONDUIT TO BE REMOVED BACK TO SOURCE
6. EXISTING 10KVA TRANSFORMER TO BE DEMOLISHED AND REMOVED. WIRE AND CONDUIT TO BE REMOVED BACK TO SOURCE
7. EXISTING TRANSFORMER TO BE DEMOLISHED AND REMOVED. WIRE AND CONDUIT TO BE REMOVED BACK TO SOURCE.
8. EXISTING (2) 3 ½" POWER CONDUIT
9. EXISTING (2) 2" COMMUNICATION CONDUIT
10. PLEASE REMOVE EXISTING SOURCE POWER CABLES THAT CONNECT FROM THE SCC TO THE UV AREA. THIS CABLE WILL HAVE ALREADY BEEN DISCONNECTED AFTER IT BEING REPLACED WITH A NEW ONE IN PHASE 1.
11. PROVIDE (1) 1" FMC CONDUIT WITH (3) #8 THWN, CU & (1) #10 CU, GND TO THE PDC
12. PROVIDE (1) ¾" FMC CONDUIT WITH (3) #10 THWN, CU & (1) #10 CU, GND TO THE HSC
13. PROVIDE (1) ¾" FMC CONDUIT WITH (3) #10 THWN, CU & (1) #10 CU GND TO NEW HVAC UNIT

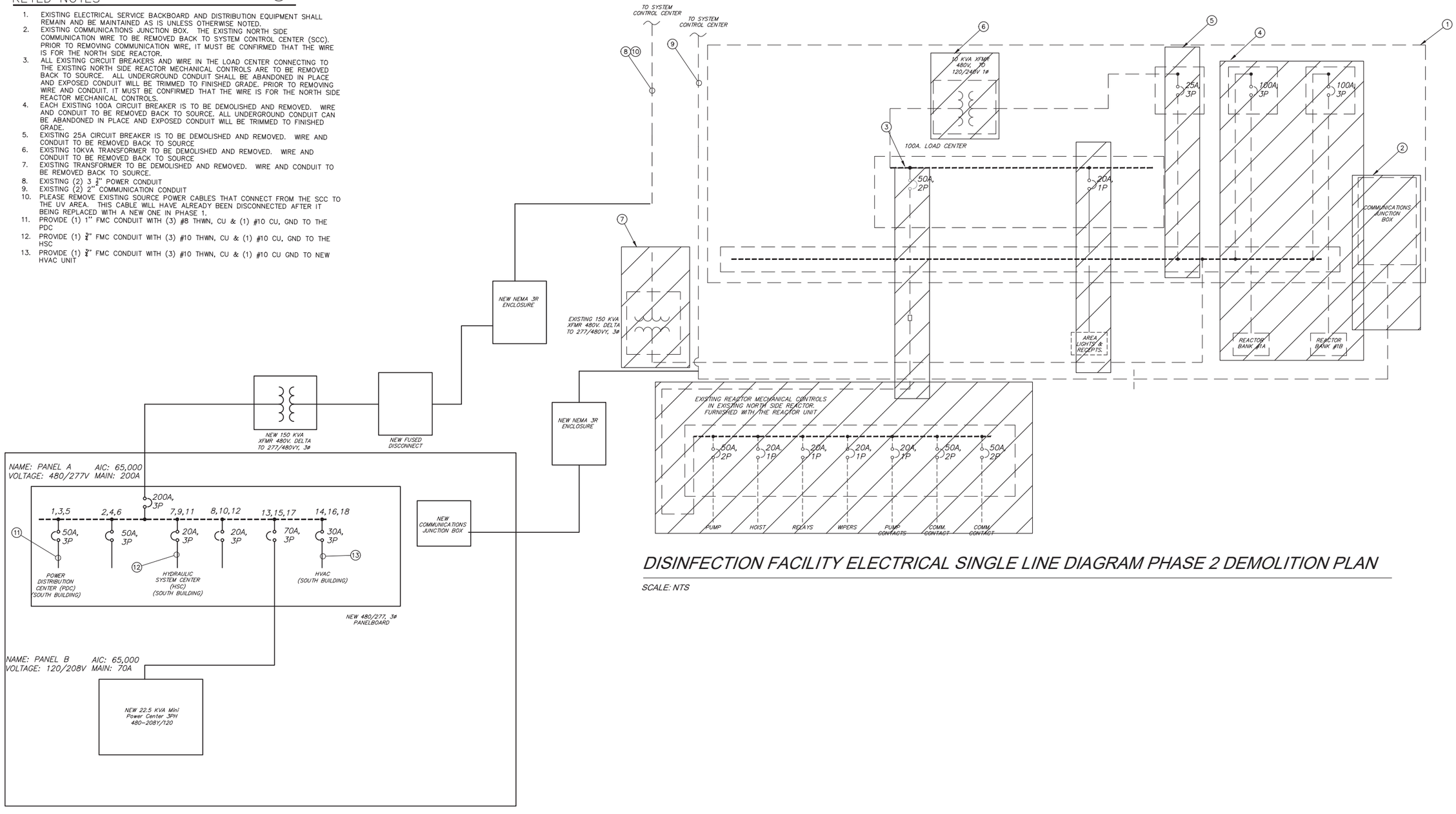

DISINFECTION FACILITY ELECTRICAL SINGLE LINE DIAGRAM PHASE 2 DEMOLITION PLAN

SCALE: NTS

DATE: _____ TIME: _____				
SERVER: _____ LAYOUT: _____				
PATH: _____				
DRAWING NAME: _____				
PAGE SETUP: _____				
DESIGNER: _____ PROJ. MGR: _____				

NO.	BY	DATE	REVISIONS:

CAUTION: The engineer preparing these plans will not be responsible for, or liable for, unauthorized changes to or uses of these plans. All changes to the plans must be in writing and must be approved by the preparer of these plans.

REGISTERED PROFESSIONAL ENGINEER — JOHN L. MOFFATT — No. 22658 Exp. 03/31/25 — ELECTRICAL — STATE OF CALIFORNIA

NV5
15092 AVENUE OF SCIENCE, SUITE 200
SAN DIEGO, CA 92128
P: 858.385.0500 WWW.NV5.COM

EL CENTRO WWTP – UV DISINFECTION IMPROVEMENTS
SINGLE LINE DIAGRAM PHASE 2 DEMOLITION PLAN

PREPARED FOR: CITY OF EL CENTRO DATE SUBMITTED: JUNE 2024

DRAWING NUMBER E-06
OF 21 SHEETS
SCALE VERTICAL: 1"= HORIZONTAL: 1"=
JOB NUMBER 227521-0001309.05

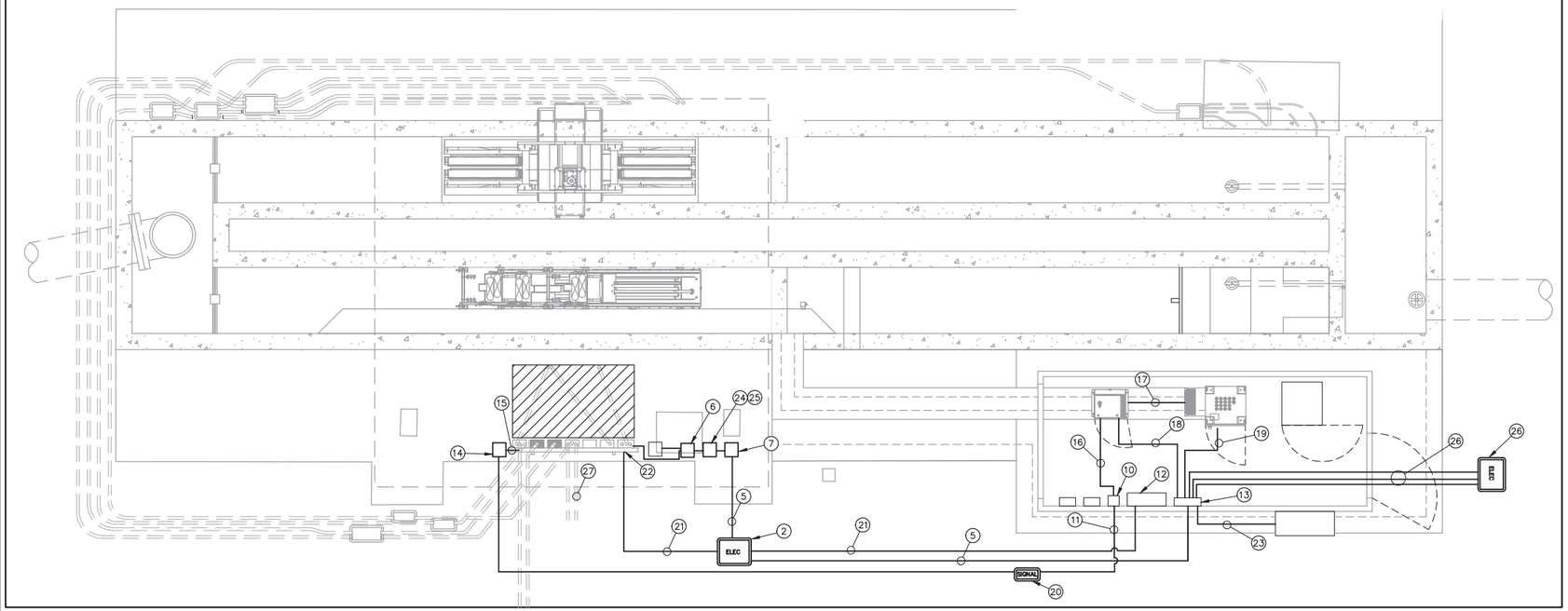

DISINFECTION FACILITY POWER & SIGNAL PLAN PHASE 1

SCALE: 1/4" = 1'-0"

KEYED NOTES

1. EXISTING ELECTRICAL SERVICE BACKBOARD AND DISTRIBUTION EQUIPMENT SHALL REMAIN AND BE MAINTAINED AS IS UNLESS OTHERWISE NOTED.
2. PROVIDE NEW TIER 22 12'X22" PRECAST CONCRETE PULL BOX, WITH BOLT-DOWN COVER ENGRAVED "ELECTRICAL POWER".
3. PROVIDE ALL EXISTING CIRCUIT BREAKERS AND WIRE CONNECTING TO THE EXISTING SOUTH SIDE REACTOR MECHANICAL CONTROLS ARE TO ALREADY BE REMOVED PER PHASE 1 DEMOLITION PLAN. SEE SHEET E-03 AND E-04.
4. EXISTING COMMUNICATIONS JUNCTION BOX. ALL EXISTING COMMUNICATION WIRE RELATED TO THE SOUTH SIDE REACTOR TO ALREADY BE REMOVED PER PHASE 1 DEMOLITION PLAN. SEE SHEET E-03 AND E-04.
5. PROVIDE (1) 3 1/2" PVC, SCHEDULE 40 CONDUIT WITH (4) 350 MCM, THWN, CU & (1) 1/0, CU, GND, FROM NEW TRANSFORMER TO NEW 480/277V PANEL BOARD IN THE NEW SOUTH BUILDING. SEE E-08 FOR SINGLE LINE DIAGRAM.
6. PROVIDE NEMA 3R ENCLOSURE FOR POWER WIRING. SIZE THE ENCLOSURE PER NEC 314.
7. PROVIDE NEW 3 PHASE 150KVA 480 DELTA-480Y/277V TRANSFORMER
8. RE-ROUTING OF NEW SOURCE POWER TO NEW ENCLOSURE. PROVIDE (1) 3" LFMC CONDUIT WITH (3) 350 MCM, THWN, CU & (1) #6 CU GND. CONTRACTOR TO CONFIRM SOURCE POWER IS FROM NEW CABLE FROM THE SCC. THE NORTH SIDE IS TO STILL BE POWERED AND ON AND OPERATING FROM EXISTING SOURCE POWER. THE RE-ROUTING IS A TEMPORARY CONFIGURATION UNTIL PHASE 2 OF THIS PROJECT IS COMPLETE.
9. NEW ROUTING FROM NEW ENCLOSURE TO NEW FUSED DISCONNECT. PROVIDE (1) 3" LFMC CONDUIT WITH (3) 350 MCM, THWN, CU & (1) #6 CU GND.
10. PROVIDE NEW COMMUNICATIONS JUNCTION BOX IN NEW SOUTH SIDE BUILDING.
11. PROVIDE (1) 2" PVC, SCHEDULE 40, CONDUIT WITH BELDEN 3106A. RUN IN NEW DUCT BANK TO NEW REACTOR EQUIPMENT. CONNECT NEW CONDUIT TO NEW NEMA ENCLOSURE FOR COMMUNICATIONS WIRING.
12. PROVIDE NEW 480Y – 120/208V MINI POWER CENTER IN NEW SOUTH SIDE BUILDING
13. PROVIDE NEW 480/277V PANEL BOARD IN NEW SOUTH SIDE BUILDING
14. PROVIDE NEMA 3R ENCLOSURE FOR COMMUNICATIONS WIRING. SIZE THE ENCLOSURE PER NEC 314.
15. PROVIDE (1) 2" LFMC CONDUIT WITH COMM. SIGNAL AND MONITORING CABLE. CONNECT CONDUIT FROM NEW ENCLOSURE TO CONDUIT INITIALLY FEEDING THE EXISTING COMMUNICATION WIRE FOR THE SOUTH SIDE REACTOR TO THE SCC. THIS EXISTING CONDUIT IS NOW EMPTY PER PHASE 1 DEMOLITION PLAN. SEE SHEET E-03 AND E-04 FOR REFERENCE. THE RE-ROUTING IS A TEMPORARY CONFIGURATION UNTIL PHASE 2 OF THIS PROJECT IS COMPLETE.
16. PROVIDE (1) 2" FMC CONDUIT WITH BELDEN 3106A.
17. COMMUNICATION WIRE DAISY CHAINED BETWEEN THE HSC AND PDC
18. PROVIDE (1) 3/4" FMC CONDUIT WITH (3) #10, THWN, CU & (1) #10 CU, GND TO THE HSC
19. PROVIDE (1) 1" FMC CONDUIT WITH (3) #8, THWN, CU & (1) #18 CU, GND TO THE PDC
20. PROVIDE NEW TIER 22 9'X16" PRECAST CONCRETE PULL BOX, WITH BOLT-DOWN COVER ENGRAVED "SIGNAL"
21. PROVIDE (1) 1" SCHEDULE 40 CONDUIT WITH (2) #10, THWN, CU & (1) #10 CU, GND TO THE RECEPTACLE AND LIGHTING FOR THE SHADER
22. ACTUAL PLACEMENT OF NEW RECEPTACLE AND ROUTING OF POWER CIRCUIT TO LIGHTING TO BE FIELD VERIFIED AND CONFIRMED BY OWNER
23. PROVIDE (1) ¾" FMC CONDUIT WITH (3) #10, THWN, CU & (1) #10 CU, GND TO NEW HVAC UNIT
24. NEW 225A FUSED DISCONNECT
25. NEW BACKBOARD FOR NEW DISCONNECT. IT IS RECOMMENDED TO SPPORT WITH GALVANIZED STEEL
26. CONDUIT SHALL BE INSTALLED FROM NEW PANELBOARD TO NEW HANDHOLE WITH PULL STRING. THIS IS FOR FUTURE PHASE 2 WORK. SEE SHEET E-09 FOR CONDUIT SIZE.
27. PROVIDE NEW (3) 350 THWN CU FROM SCC TO NEW ELECTRICAL CIRCUIT FOR THE SOUTH SIDE REACTOR. COORDINATION WILL NEED TO BE DONE TO ENSURE THAT BOTH UV UNITS ARE OFFLINE FOR A SHORT PERIOD OF TIME DURING THE SWITCHING ON OF THE SOUTH SIDE REACTOR AND THE DISCONNECTING OF THE NORTH SIDE REACTOR. THE AMOUNT OF TIME NEEDED TO HAVE BOTH UNITS OFFLINE WILL NEED TO BE APPROVED BY THE OWNER. PRIOR TO PULLING THE NEW WIRE, THE CONTRACTOR SHALL ENSURE THE CONDUIT IS CLEAN AND FREE OF ANY DEBRIS. ALSO, THE CONTRACTOR WILL PULL A FLEXIBLE MANDREL THROUGH THE CONDUIT.

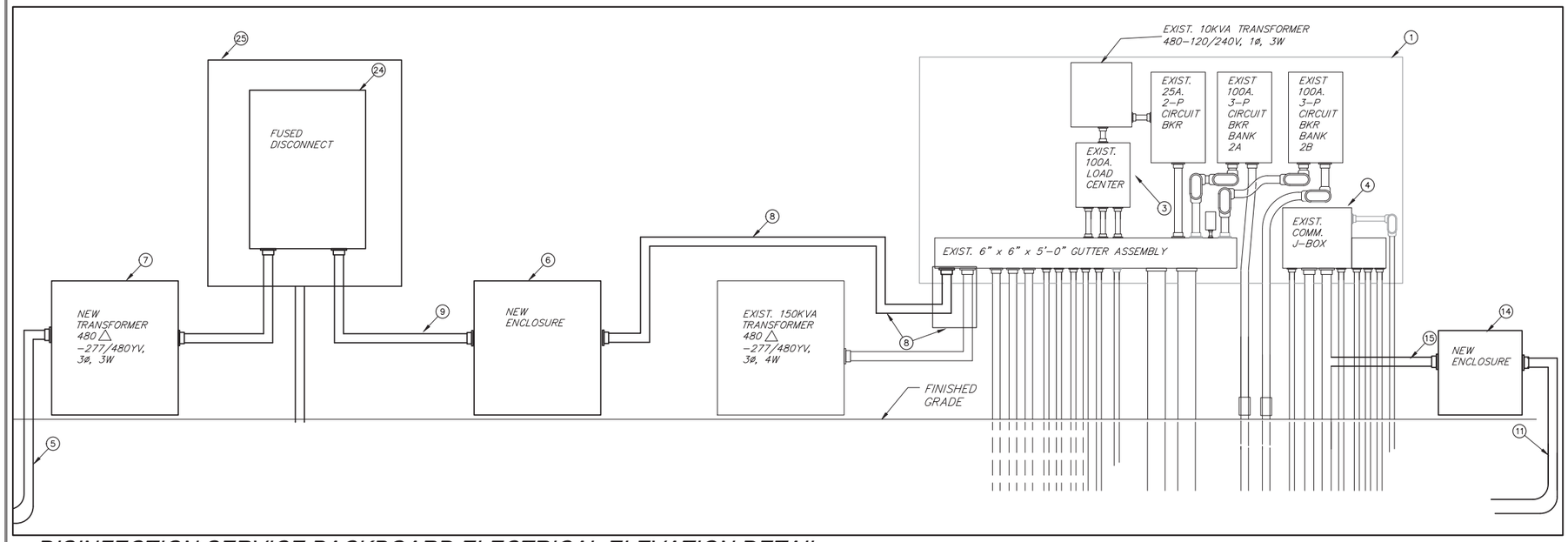

DISINFECTION SERVICE BACKBOARD ELECTRICAL ELEVATION DETAIL

SCALE: NTS

DATE: _____ TIME: _____
SERVER: _____ LAYOUT: _____
PATH: _____
DRAWING NAME: _____
PAGE SETUP: _____
DESIGNER: _____ PROJ. MGR: _____

NO.	BY	DATE	REVISIONS:

CAUTION: The engineer preparing these plans will not be responsible for, or liable for, unauthorized changes to or uses of these plans. All changes to the plans must be in writing and must be approved by the preparer of these plans.

REGISTERED PROFESSIONAL ENGINEER — John L. McIntyre — No. 22658 — Exp. 03/31/25 — ELECTRICAL — STATE OF CALIFORNIA

NV5
15092 AVENUE OF SCIENCE, SUITE 200
SAN DIEGO, CA 92128
P: 858.385.0500 WWW.NV5.COM

EL CENTRO WWTP – UV DISINFECTION IMPROVEMENTS
POWER AND SIGNAL PLAN PHASE 1

PREPARED FOR: CITY OF EL CENTRO
DATE SUBMITTED: JUNE 2024

DRAWING NUMBER E-07
OF 21 SHEETS
SCALE
VERTICAL: 1"=
HORIZONTAL: 1"=
JOB NUMBER 227521-0001309.05

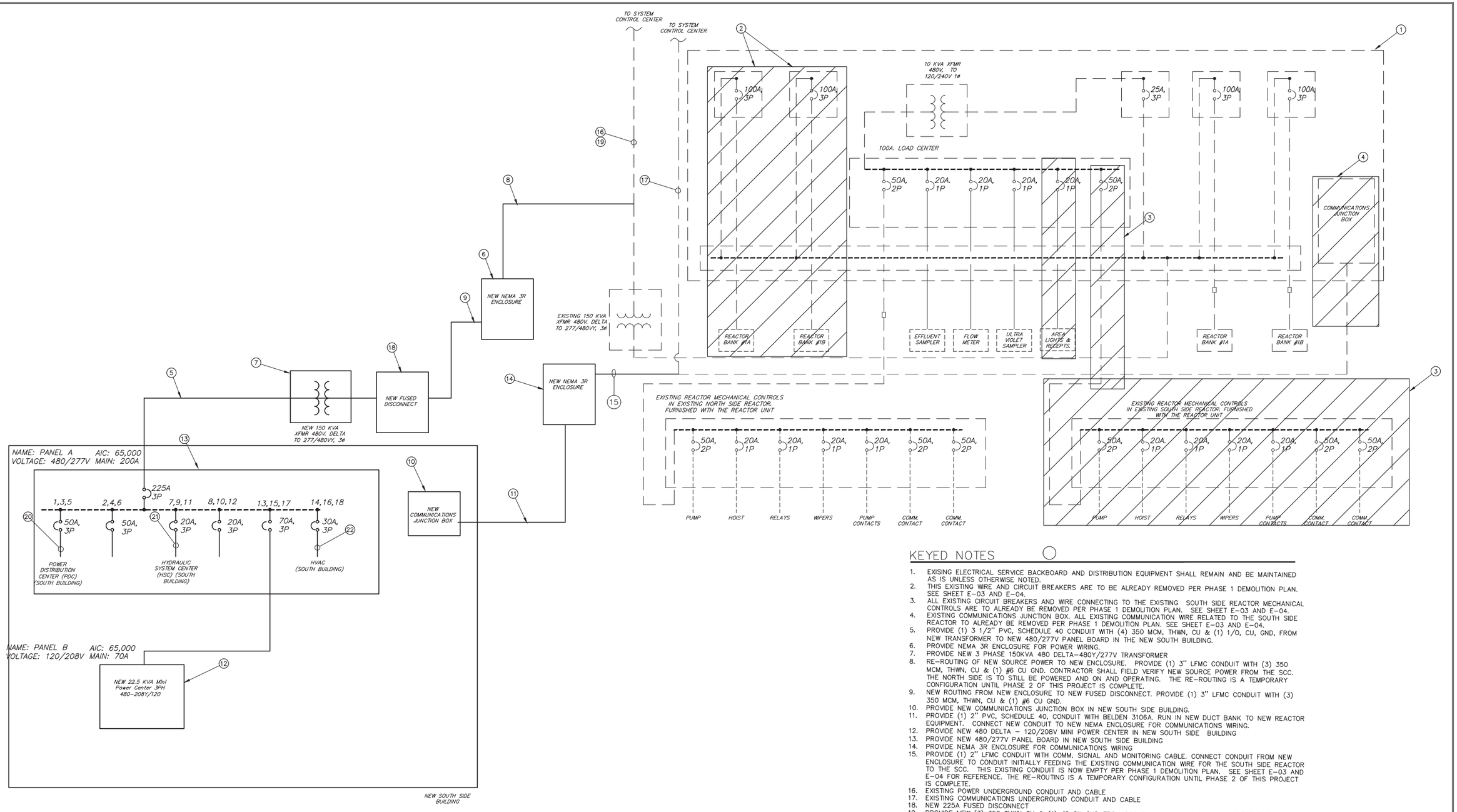

DISINFECTION FACILITY ELECTRICAL SINGLE LINE DIAGRAM PHASE 1

SCALE: NTS

KEYED NOTES

1. EXISING ELECTRICAL SERVICE BACKBOARD AND DISTRIBUTION EQUIPMENT SHALL REMAIN AND BE MAINTAINED AS IS UNLESS OTHERWISE NOTED.
2. THIS EXISTING WIRE AND CIRCUIT BREAKERS ARE TO BE ALREADY REMOVED PER PHASE 1 DEMOLITION PLAN. SEE SHEET E-03 AND E-04.
3. ALL EXISTING CIRCUIT BREAKERS AND WIRE CONNECTING TO THE EXISTING SOUTH SIDE REACTOR MECHANICAL CONTROLS ARE TO ALREADY BE REMOVED PER PHASE 1 DEMOLITION PLAN. SEE SHEET E-03 AND E-04.
4. EXISTING COMMUNICATIONS JUNCTION BOX. ALL EXISTING COMMUNICATION WIRE RELATED TO THE SOUTH SIDE REACTOR TO ALREADY BE REMOVED PER PHASE 1 DEMOLITION PLAN. SEE SHEET E-03 AND E-04.
5. PROVIDE (1) 3 1/2" PVC, SCHEDULE 40 CONDUIT WITH (4) 350 MCM, THWN, CU & (1) 1/0, CU, GND, FROM NEW TRANSFORMER TO NEW 480/277V PANEL BOARD IN THE NEW SOUTH BUILDING.
6. PROVIDE NEMA 3R ENCLOSURE FOR POWER WIRING.
7. PROVIDE NEW 3 PHASE 150KVA 480 DELTA-480Y/277V TRANSFORMER
8. RE-ROUTING OF NEW SOURCE POWER TO NEW ENCLOSURE. PROVIDE (1) 3" LFMC CONDUIT WITH (3) 350 MCM, THWN, CU & (1) #6 CU GND. CONTRACTOR SHALL FIELD VERIFY NEW SOURCE POWER FROM THE SCC. THE NORTH SIDE IS TO STILL BE POWERED AND ON AND OPERATING. THE RE-ROUTING IS A TEMPORARY CONFIGURATION UNTIL PHASE 2 OF THIS PROJECT IS COMPLETE.
9. NEW ROUTING FROM NEW ENCLOSURE TO NEW FUSED DISCONNECT. PROVIDE (1) 3" LFMC CONDUIT WITH (3) 350 MCM, THWN, CU & (1) #6 CU GND.
10. PROVIDE NEW COMMUNICATIONS JUNCTION BOX IN NEW SOUTH SIDE BUILDING.
11. PROVIDE (1) 2" PVC, SCHEDULE 40, CONDUIT WITH BELDEN 3106A. RUN IN NEW DUCT BANK TO NEW REACTOR EQUIPMENT. CONNECT NEW CONDUIT TO NEW NEMA ENCLOSURE FOR COMMUNICATIONS WIRING.
12. PROVIDE NEW 480 DELTA – 120/208V MINI POWER CENTER IN NEW SOUTH SIDE BUILDING
13. PROVIDE NEW 480/277V PANEL BOARD IN NEW SOUTH SIDE BUILDING
14. PROVIDE NEMA 3R ENCLOSURE FOR COMMUNICATIONS WIRING
15. PROVIDE (1) 2" LFMC CONDUIT WITH COMM. SIGNAL AND MONITORING CABLE. CONNECT CONDUIT FROM NEW ENCLOSURE TO CONDUIT INITIALLY FEEDING THE EXISTING COMMUNICATION WIRE FOR THE SOUTH SIDE REACTOR TO THE SCC. THIS EXISTING CONDUIT IS NOW EMPTY PER PHASE 1 DEMOLITION PLAN. SEE SHEET E-03 AND E-04 FOR REFERENCE. THE RE-ROUTING IS A TEMPORARY CONFIGURATION UNTIL PHASE 2 OF THIS PROJECT IS COMPLETE.
16. EXISTING POWER UNDERGROUND CONDUIT AND CABLE
17. EXISTING COMMUNICATIONS UNDERGROUND CONDUIT AND CABLE
18. NEW 225A FUSED DISCONNECT
19. PROVIDE NEW (3) 350 THWN CU & (1) #6 CU GND FROM SCC TO NEW ELECTRICAL CIRCUIT FOR THE SOUTH SIDE REACTOR. COORDINATION WILL NEED TO BE DONE TO ENSURE THAT BOTH UV UNITS ARE OFFLINE FOR A SHORT PERIOD OF TIME DURING THE SWITCHING ON OF THE SOUTH SIDE REACTOR AND THE DISCONNECTING OF THE NORTH SIDE REACTOR. THE AMOUNT OF TIME NEEDED TO HAVE BOTH UNITS OFFLINE WILL NEED TO BE APPROVED BY THE OWNER. PRIOR TO PULLING THE NEW WIRE, THE CONTRACTOR SHALL ENSURE THE CONDUIT IS CLEAN AND FREE OF ANY DEBRIS. ALSO, THE CONTRACTOR WILL PULL A FLEXIBLE MANDREL THROUGH THE CONDUIT.
20. PROVIDE (1) 1" FMC CONDUIT WITH (3) #8 THWN, CU & (1) #10 CU, GND TO THE PDC
21. PROVIDE (1) ¾" FMC CONDUIT WITH (3) #10 THWN, CU & (1) #10 CU, GND TO THE HSC
22. PROVIDE (1) ¾" FMC CONDUIT WITH (3) #10 THWN, CU & (1) #10 CU GND TO NEW HVAC UNIT

DATE: _____ TIME: _____
SERVER: _____ LAYOUT: _____
PATH: _____
DRAWING NAME: _____
PAGE SETUP: _____
DESIGNER: _____ PROJ. MGR: _____

NO.	BY	DATE	REVISIONS:

CAUTION: The engineer preparing these plans will not be responsible for, or liable for, unauthorized changes to or uses of these plans. All changes to the plans must be in writing and must be approved by the preparer of these plans.

REGISTERED PROFESSIONAL ENGINEER — ROBERT L. MOTT — No. 22658 — Exp. 03/31/25 — ELECTRICAL — STATE OF CALIFORNIA

NV5
15092 AVENUE OF SCIENCE, SUITE 200
SAN DIEGO, CA 92128
P: 858.385.0500 WWW.NV5.COM

EL CENTRO WWTP – UV DISINFECTION IMPROVEMENTS
SINGLE LINE DIAGRAM PHASE 1

PREPARED FOR: CITY OF EL CENTRO DATE SUBMITTED: JUNE 2024

DRAWING NUMBER E-08
OF 21 SHEETS
SCALE
VERTICAL: 1"=
HORIZONTAL: 1"=
JOB NUMBER 227521-0001309.05

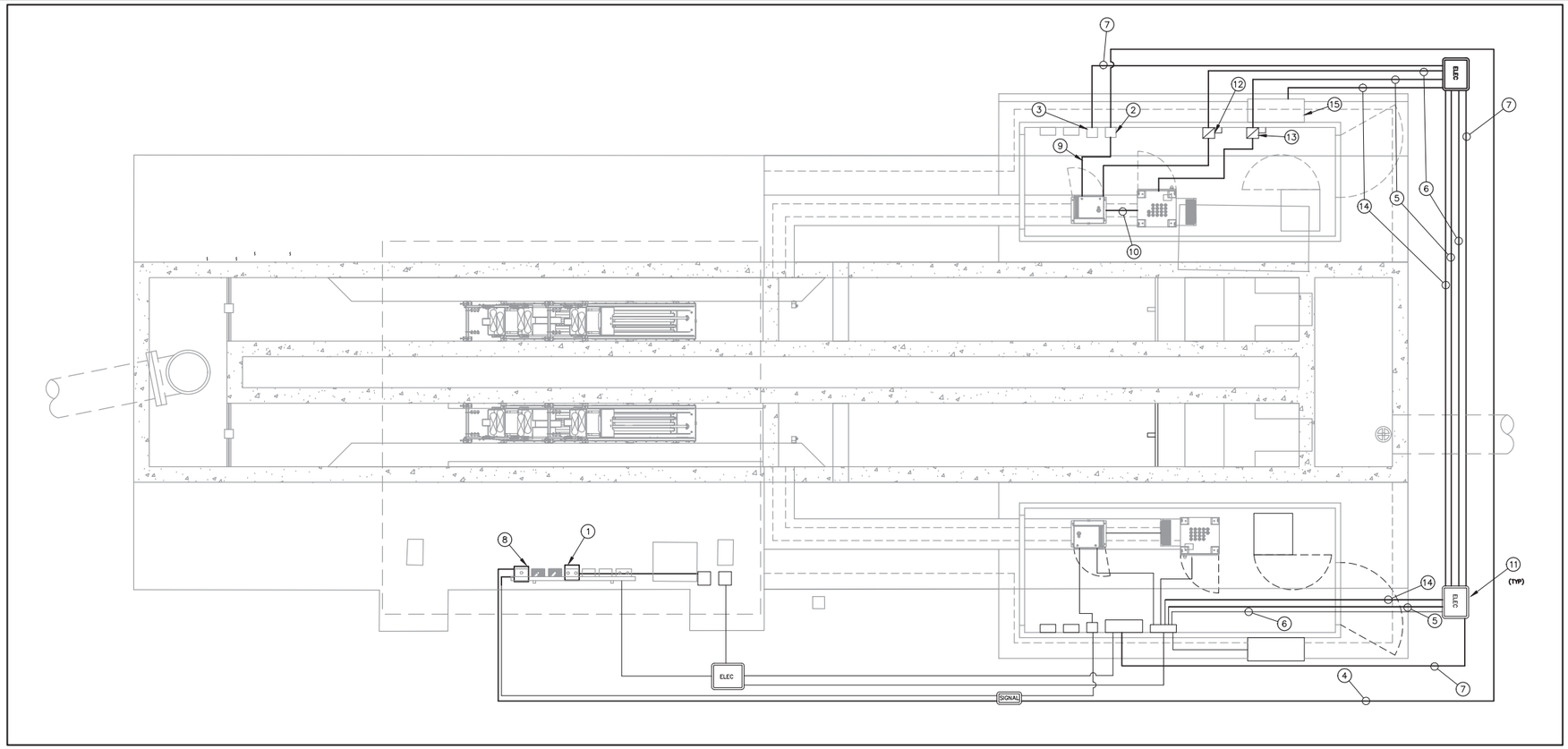

DISINFECTION FACILITY POWER & SIGNAL PLAN PHASE 2

SCALE: 1/4" = 1'-0"

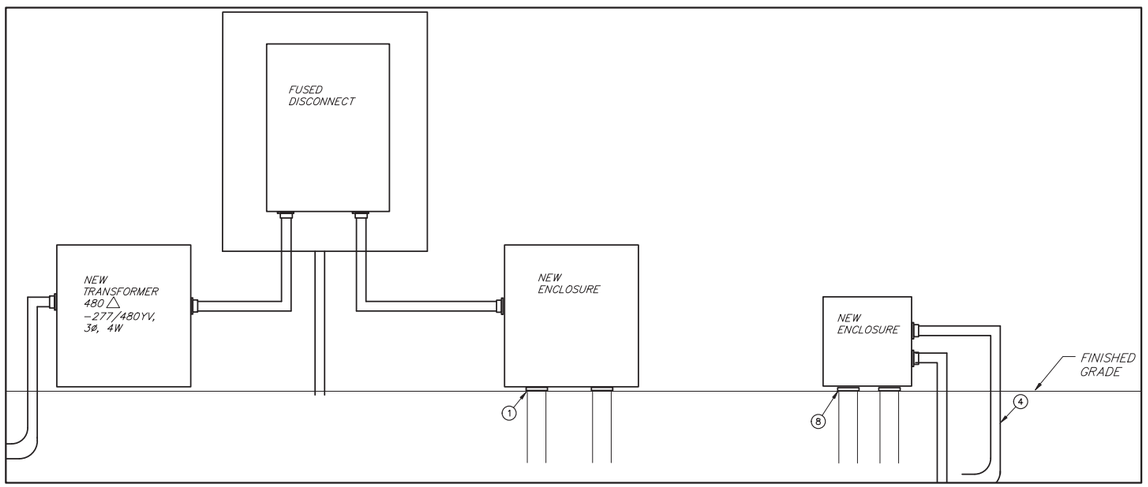

DISINFECTION SERVICE BACKBOARD ELECTRICAL ELEVATION DETAIL PHASE 2

SCALE: NTS

KEYED NOTES

1. ENCLOSURE IS TO BE MOVED OVER THE EXITING POWER CONDUITS
2. NEW COMMUNICATIONS JUNCTION BOX. SIZE THE BOX PER NEC 314.
3. PROVIDE NEW 208/120V ELECTRICAL JUNCTION BOX
4. PROVIDE (1) 2" PVC, SCHEDULE 40, CONDUIT WITH BELDEN 3106A AND MONITORING CABLE RUN IN NEW DUCT BANK TO NEW REACTOR EQUIPMENT. CONNECT NEW CONDUIT TO NEW NEMA 3R ENCLOSURE WHICH ULTIMATELY CONNECTS TO EXISTING CONDUIT THAT IS EMPTY DUE TO PULLING OF WIRE FOR PHASE 2 DEMOLITION PLAN, PER SHEET E-05 AND E-06.
5. CONNECTION TO POWER DISTRIBUTION CENTER (PDC) IN NEW NORTH BUILDING. PROVIDE (1) 1 ½" PVC, SCHEDULE 40 CONDUIT WITH (4) #8 THWN, CU & (1) #8, CU GND,
6. CONNECTION TO HYDRAULIC SYSTEM CENTER (HSC) IN NEW NORTH BUILDING. PROVIDE (1) 1" PVC, SCHEDULE 40 CONDUIT WITH (3) #10 THWN, CU & (1) #10, CU, GND
7. CONNECTION TO 208/120V JUNCTION BOX IN NEW NORTH BUILDING. PROVIDE (1) 1" PVC, SCHEDULE 40 CONDUIT WITH (2) #12 THWN, CU FOR LOW LEVEL SENSOR, (2) #12 THWN, CU FOR INTERIOR AND EXTERIOR LIGHTING, (2) #12 THWN, CU FOR EMERGENCY EXIT, (2) #12 THWN, CU FOR INTERIOR AND EXTERIOR RECEPTACLES AND (2) #12 THWN, CU FOR THE REFRIDGERATED WATER SAMPLER & (1) #12, CU, GND
8. ENCLOSURE IS TO BE MOVED OVER THE EXISTING COMMUNICATION CONDUITS GOING BACK TO SCC.
9. PROVIDE (1) 2" FMC CONDUIT WITH BELDEN 3106A.
10. COMMUNICATION WIRE DAISY CHAINED BETWEEN THE HSC AND PDC
11. NEW ELECTRICAL HANDHOLE
12. NEW 30A FUSED DISCONNECT WITH A 20A FUSE FOR HSC
13. NEW 60A FUSED DISCONNECT WITH A 50A FUSE FOR PDC
14. PROVIDE (1) 1" PVC, SCHEDULE 40 CONDUIT WITH (3) #10 THWN, CU & (1) #10, CU, GND
15. NEW HVAC UNIT. ACTUAL LOCATION TO BE VERIFIED BY BUILDING MANUFACTURER.

DATE: _____ TIME: _____
SERVER: _____ LAYOUT: _____
PATH: _____
DRAWING NAME: _____
PAGE SETUP: _____
DESIGNER: _____ PROJ. MGR: _____

NO.	BY	DATE	REVISIONS:

CAUTION: The engineer preparing these plans will not be responsible for, or liable for, unauthorized changes to or uses of these plans. All changes to the plans must be in writing and must be approved by the preparer of these plans.

REGISTERED PROFESSIONAL ENGINEER — JOHN L. MOFFATT — No. 22658 — Exp. 03/31/25 — ELECTRICAL — STATE OF CALIFORNIA

NV5
15092 AVENUE OF SCIENCE, SUITE 200
SAN DIEGO, CA 92128
P: 858.385.0500 WWW.NV5.COM

EL CENTRO WWTP – UV DISINFECTION IMPROVEMENTS

POWER & SIGNAL PLAN PHASE 2

PREPARED FOR: CITY OF EL CENTRO

DATE SUBMITTED: JUNE 2024

DRAWING NUMBER
E-09
OF 21 SHEETS

SCALE
VERTICAL: 1"=
HORIZONTAL: 1"=

JOB NUMBER
227521-0001309.05

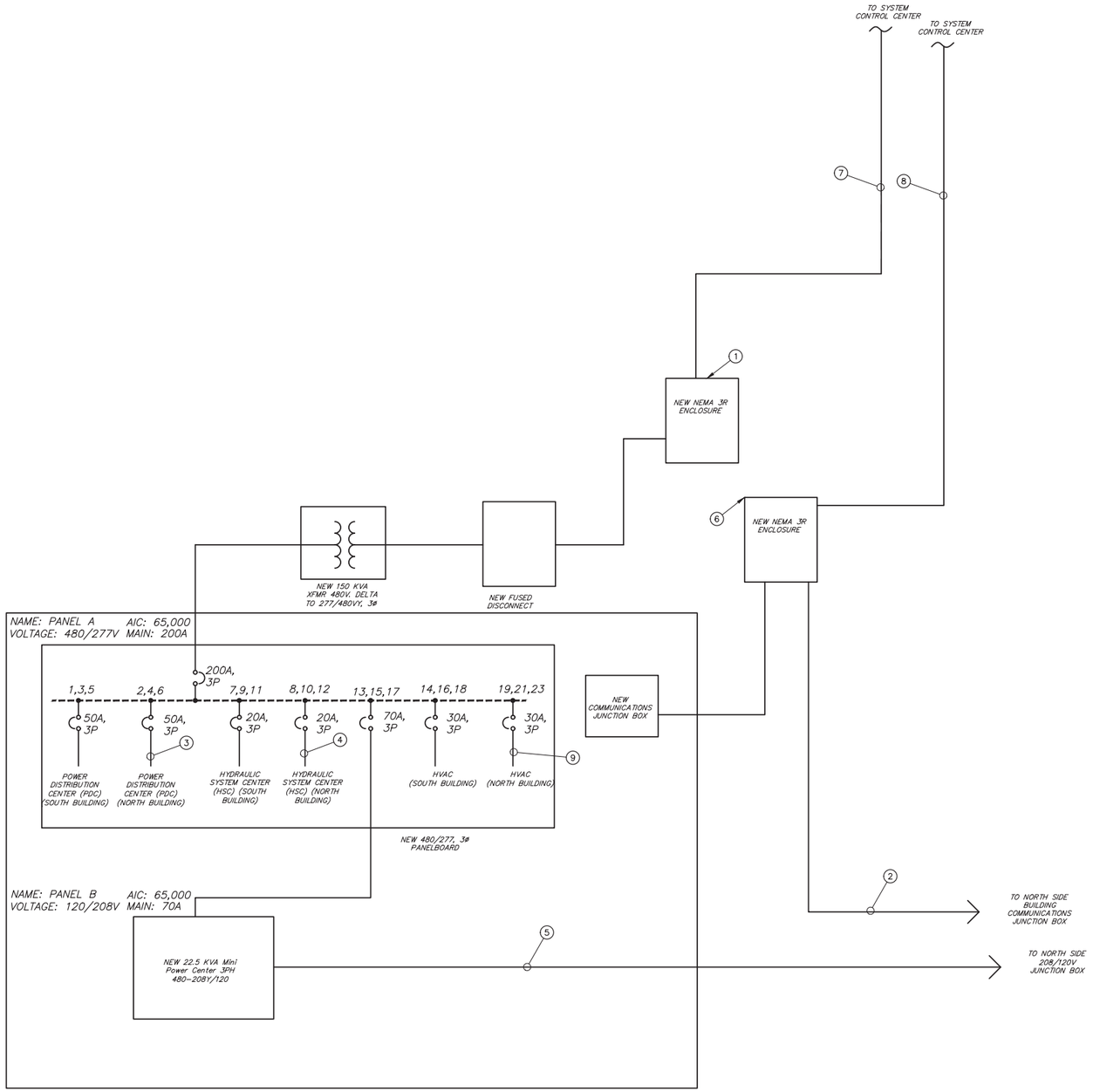

KEYED NOTES

1. ENCLOSURE IS TO BE MOVED OVER THE EXISTING POWER CONDUITS.
2. PROVIDE (1) 2" PVC, SCHEDULE 40, CONDUIT WITH BELDEN 3106A AND MONITORING CABLE RUN IN NEW DUCT BANK TO NEW REACTOR EQUIPMENT. CONNECT NEW CONDUIT TO NEW NEMA 3R ENCLOSURE WHICH ULTIMATELY CONNECTS TO EXISTING CONDUIT THAT IS EMPTY DUE TO PULLING OF WIRE FOR PHASE 2 DEMOLITION PLAN, PER SHEET E-05 AND E-06.
3. CONNECTION TO POWER DISTRIBUTION CENTER (PDC) IN NEW NORTH BUILDING. PROVIDE (1) 1 ½" PVC, SCHEDULE 40 CONDUIT WITH (4) #8 THWN, CU & (1) #8, CU GND,
4. CONNECTION TO HYDRAULIC SYSTEM CENTER (HSC) IN NEW NORTH BUILDING. PROVIDE (1) 1" PVC, SCHEDULE 40 CONDUIT WITH (3) #10 THWN, CU & (1) #8, CU, GND
5. CONNECTION TO 208/120V JUNCTION BOX IN NEW NORTH BUILDING. PROVIDE (1) 1" PVC, SCHEDULE 40 CONDUIT WITH (2) #12 THWN, CU FOR LOW LEVEL SENSOR, (2) #12 THWN, CU FOR INTERIOR AND EXTERIOR LIGHTING, (2) #12 THWN, CU FOR EMERGENCY EXIT, (2) #12 THWN, CU FOR INTERIOR AND EXTERIOR RECEPTACLES AND (2) #12 THWN, CU FOR THE REFRIDGERATED WATER SAMPLER & (1) #12, CU, GND
6. ENCLOSURE IS TO BE MOVED OVER THE EXISTING COMMUNICATION CONDUITS GOING BACK TO SCC.
7. EXISTING POWER UNDERGROUND CONDUIT
8. EXISTING COMMUNICATIONS UNDERGROUND CONDUIT
9. PROVIDE (1) ¾" FMC CONDUIT WITH (3) #10 THWN, CU & (1) #10 CU GND TO NEW HVAC UNIT

DISINFECTION FACILITY ELECTRICAL SINGLE LINE DIAGRAM PHASE 2

SCALE: NTS

DATE: _____ TIME: _____
SERVER: _____ LAYOUT: _____
PATH: _____
DRAWING NAME: _____
PAGE SETUP: _____
DESIGNER: _____ PROJ. MGR: _____

NO.	BY	DATE	REVISIONS:

CAUTION: The engineer preparing these plans will not be responsible for, or liable for, unauthorized changes to or uses of these plans. All changes to the plans must be in writing and must be approved by the preparer of these plans.

REGISTERED PROFESSIONAL ENGINEER — JOHN L. MORRETT — No. 22658 — Exp. 03/31/25 — ELECTRICAL — STATE OF CALIFORNIA

NV5
15092 AVENUE OF SCIENCE, SUITE 200
SAN DIEGO, CA 92128
P: 858.385.0500 WWW.NV5.COM

EL CENTRO WWTP – UV DISINFECTION IMPROVEMENTS
SINGLE LINE DIAGRAM PHASE 2

PREPARED FOR: CITY OF EL CENTRO DATE SUBMITTED: JUNE 2024

DRAWING NUMBER E-10
OF 21 SHEETS
SCALE
VERTICAL: 1"=
HORIZONTAL: 1"=
JOB NUMBER 227521-0001309.05

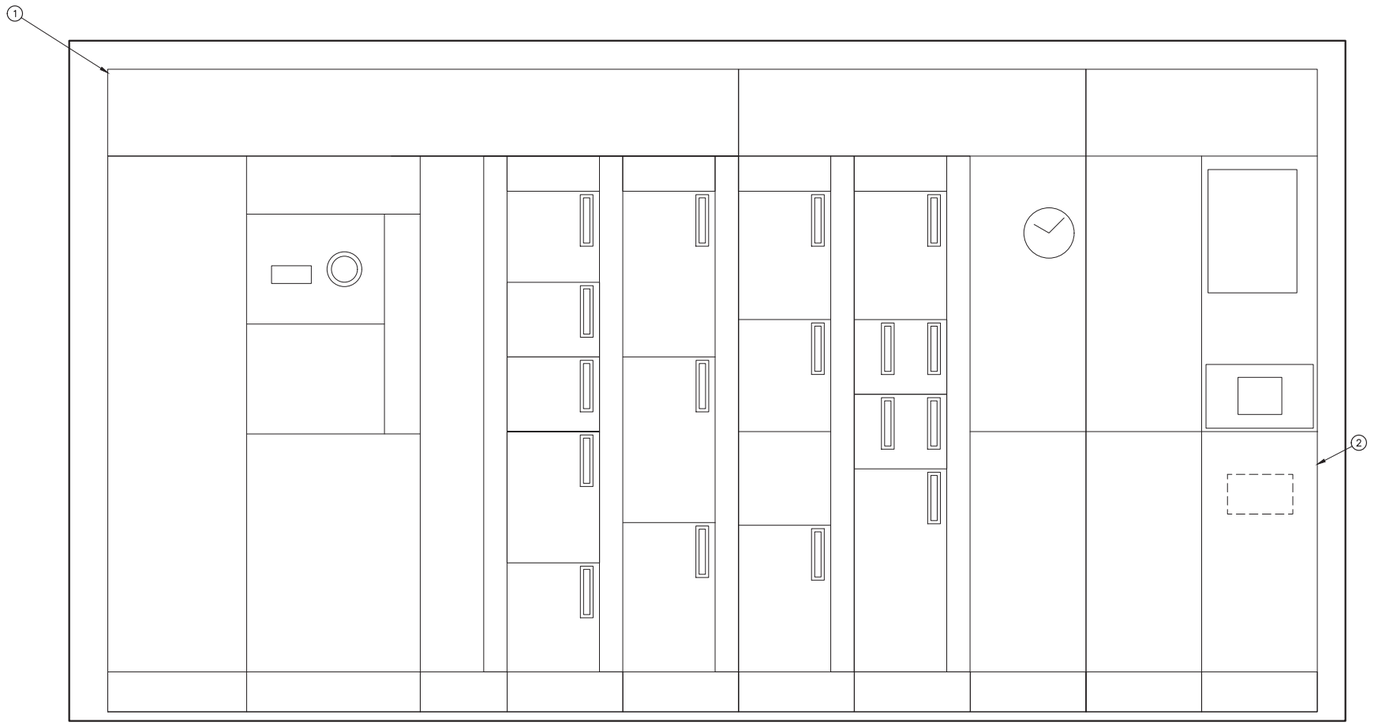

GENERAL NOTES

A. THE CONTRACTOR SHALL ROUTE THE EXISTING UV TRANSMITTANCE (UVT) 4–20MA ANALOG SIGNAL FROM SCADA TO THE PROPOSED SCC VIA THERNET OR ANALOG WIRING. THE CONTRACTOR SHALL INVESTIGATE AND COORDINATE WITH THE CITY TO DETERMINE NECESSARY IMPROVEMENTS.

KEYED NOTES

1. EXISTING ELECTRICAL SERVICE MAIN METER SWTCHBOARD "SYSTEM CONTROL CENTER" AND DISTRIBUTION EQUIPMENT SHALL REMAIN AND BE MAINTAINED AS IS UNLESS OTHERWISE NOTED
2. INSTALL NEW SCC IN EXISTING EMPTY CABINET. AFTER COMMISSIONING OF NEW SCC, THE OLD SCC WILL BE DEMOLISHED AND REMOVED.
3. WIRING FROM THE SCC TO HSC TO PDC SHOULD BE BELDEN 3106A (ONE LINE PER CHANNEL
4. THE WIRING FROM THE SCC TO SCADA WILL BE ETHERNET CAT 5E CABLE WITH RJ45 CONNECTOR. CONTRACTOR WILL FIELD VERIFY BEST ROUTING.
5. COMMUNICATION WIRE DAISY CHAINED BETWEEN THE HSC AND PDC

SYSTEMS CONTROL CENTER ELEVATION DETAIL

SCALE: NTS

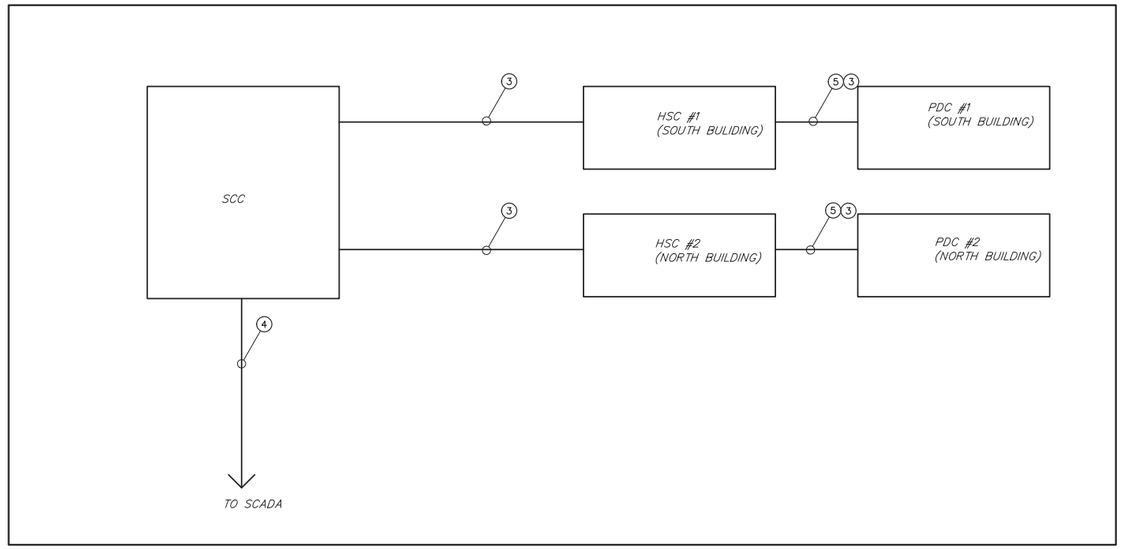

OVERALL SINGLE LINE SIGNAL PLAN

SCALE: NTS

DATE: _____ TIME: _____
SERVER: _____ LAYOUT: _____
PATH: _____
DRAWING NAME: _____
PAGE SETUP: _____
DESIGNER: _____ PROJ. MGR: _____

NO.	BY	DATE	REVISIONS:

CAUTION: The engineer preparing these plans will not be responsible for, or liable for, unauthorized changes to or uses of these plans. All changes to the plans must be in writing and must be approved by the preparer of these plans.

REGISTERED PROFESSIONAL ENGINEER — JOHN L. MOLLETT — No. 22658 — Exp. 03/31/25 — ELECTRICAL — STATE OF CALIFORNIA

NV5
15092 AVENUE OF SCIENCE, SUITE 200
SAN DIEGO, CA 92128
P: 858.385.0500 WWW.NV5.COM

EL CENTRO WWTP – UV DISINFECTION IMPROVEMENTS
OVERALL SINGLE LINE SIGNAL PLAN

PREPARED FOR: CITY OF EL CENTRO
DATE SUBMITTED: JUNE 2024

DRAWING NUMBER
E–11
OF 21 SHEETS

SCALE
VERTICAL: 1"=
HORIZONTAL: 1"=

JOB NUMBER
227521–0001309.05

PANEL 'A'

VOLTAGE:	480/277V	**FRAME:**	400A FRAME	**MIN AIC RATING:**	65,000		
PHASE:	3 PHASE	**MAIN:**	200A	**CIRCUITS:**	42		
WIRE:	4 WIRE	**ENCLOSURE:**	NEMA 3R	**MOUNTING:**	SURFACE		
FEED:	BOTTOM	**LOCATION:**	SOUTH BUILDING				

CKT NO	BKR RTNG	LOAD DESCRIPTION	VA	CONNECTED VA LOAD A	B	C	VA	LOAD DESCRIPTION	BKR RTNG	CKT NO
1	50A/3P	POWER DISTRIBUTION CENTER (PDC) (SOUTH BUILDING)	9133	18266			9133	POWER DISTRIBUTION CENTER (PDC) (NORTH BUILDING)	50A/3P	2
3			9133		18266		9133			4
5			9133			18266	9133			6
7	20A/3P	HYDRAULIC SYSTEM CENTER (HSC) (SOUTH BUILDING)	833	1666			833	HYDRAULIC SYSTEM CENTER (HSC) (NORTH BUILDING)	20A/3P	8
9			833		1666		833			10
11			833			1666	833			12
13	70A/3P	PANEL 'B'	7500	10500			3000	HVAC FOR SOUTH BUILDING	20A/3P	14
15			7500		10500		3000			16
17			7500			10500	3000			18
19	20A/3P	HVAC FOR NORTH BUILDING	3000	3000				SPARE		20
21			3000		3000			SPARE		22
23			3000			3000		SPARE		24
25		SPARE		0				SPARE		26
27					0					28
29						0				30
31				0						32
33					0					34
35						0				36
37				0						38
39					0					40
41						0				42
		CONNECTED LOAD (VA) PER PHASE	33432	33432	33432		**100296**	**TOTAL CONNECTED LOAD (VA)**		
							120.8	**TOTAL CONNECTED LOAD (AMPS)**		

PANEL 'B'

VOLTAGE:	120/208V	**FRAME:**	70A FRAME	**MIN AIC RATING:**	65,000		
PHASE:	3 PHASE	**MAIN:**	70A	**CIRCUITS:**	18		
WIRE:	4 WIRE	**ENCLOSURE:**	NEMA 3R	**MOUNTING:**	SURFACE		
FEED:	BOTTOM	**LOCATION:**	SOUTH BUILDING				

CKT NO	BKR RTNG	LOAD DESCRIPTION	VA	CONNECTED VA LOAD A	B	C	VA	LOAD DESCRIPTION	BKR RTNG	CKT NO
1	20A/1P	LOW LEVEL SENSOR LCP (SOUTH BUILDING)	120	240			120	LOW LEVEL SENSOR LCP (LCP NORTH BUILDING)	20A/1P	2
3	20A/1P	INTERIOR AND EXTERIOR LIGHTING (SOUTH BUILDING)	240		540		300	SHADER LIGHTING AND RECEPTACLE UNDER SHADER	20A/1P	4
5	20A/1P	REFRIDGERATED WATER SAMPLER (SOUTH BUILDING)	180			420	240	INTERIOR AND EXTERIOR LIGHTING (NORTH BUILDING)	20A/1P	6
7	20A/1P	INTERIOR (2) AND EXTERIOR (1) RECEPTACLES (SOUTH BUILDING)	540	660			120	EMERGENCY EXIT (NORTH BUILDING)	20A/1P	8
9	20A/1P	EMERGENCY EXIT (SOUTH BUILDING)	120		660		540	INTERIOR (2) AND EXTERIOR (1) RECEPTACLES (NORTH BUILDING)	20A/1P	10
11		SPARE				180	180	REFRIDGERATED WATER SAMPLER (NORTH BUILDING)	20A/1P	12
13		SPARE		0				SPARE		14
15		SPARE			0			SPARE		16
17		SPARE				0		SPARE		18
		CONNECTED LOAD (VA) PER PHASE	900	1200	600		**2700**	**TOTAL CONNECTED LOAD (VA)**		
							7.5	**TOTAL CONNECTED LOAD (AMPS)**		

DATE: _____ TIME: _____
SERVER: _____ LAYOUT: _____
PATH: _____
DRAWING NAME: _____
PAGE SETUP: _____
DESIGNER: _____ PROJ. MGR: _____

NO.	BY	DATE	REVISIONS:

CAUTION: The engineer preparing these plans will not be responsible for, or liable for, unauthorized changes to or uses of these plans. All changes to the plans must be in writing and must be approved by the preparer of these plans.

REGISTERED PROFESSIONAL ENGINEER — JOHN L. MOFFATT — No. 22658 — Exp. 03/31/25 — ELECTRICAL — STATE OF CALIFORNIA

NV5
15092 AVENUE OF SCIENCE, SUITE 200
SAN DIEGO, CA 92128
P: 858.385.0500 WWW.NV5.COM

EL CENTRO WWTP – UV DISINFECTION IMPROVEMENTS
PANEL SCHEDULE

PREPARED FOR: CITY OF EL CENTRO DATE SUBMITTED: JUNE 2024

DRAWING NUMBER E-12
OF 21 SHEETS
SCALE
VERTICAL: 1"=
HORIZONTAL: 1"=
JOB NUMBER 227521-0001309.05

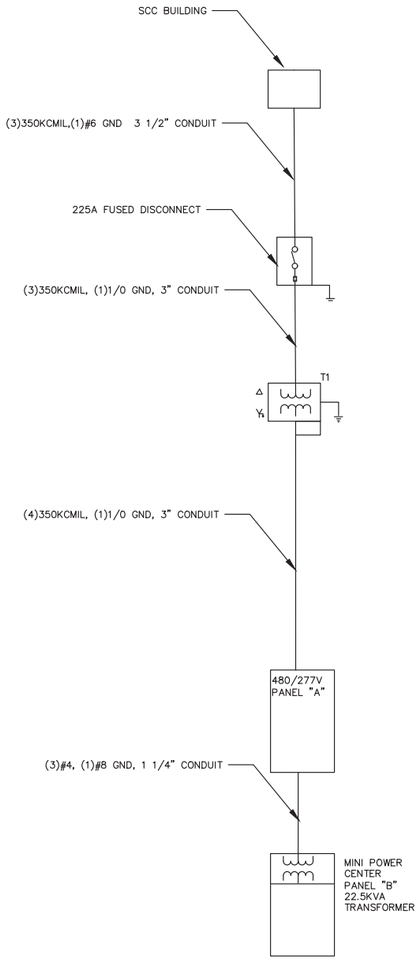

B1 POWER ONE-LINE DIAGRAM
SCALE: NONE

NOTES:

1. BOND NEUTRAL OF TRANSFORMER SECONDARY TO TRANSFORMER CASE WITH BONDING JUMPER SIZED IN ACCORDANCE WITH NATIONAL ELECTRIC CODE, TABLE 250-66, GROUNDING BAR SHALL BE SUITABLY CONNECTED TO CABINET (SIZE AND NUMBER OF CONNECTIONS TO SUIT APPLICATION).
2. GREEN INSULATED GROUNDING CONDUCTOR (EQUIPMENT GROUND), NEC TABLE 250-122.
   a. REFER TO DRY TYPE TRANSFORMER SCHEDULE FOR GROUND CONDUCTOR SIZE.
   b. DRY TYPE TRANSFORMERS FED DIRECTLY FROM MAIN SWITCHBOARD SHALL HAVE THEIR EQUIPMENT GROUND CONDUCTOR CONNECTED TO MAIN SWITCHBOARD GROUND BUS.
3. PROVIDE GROUNDING ELECTRODE CONDUCTOR IN CONDUIT FROM XO TERMINAL TO GROUND BUS IN ACCORDANCE WITH NEC TABLE 250-66.

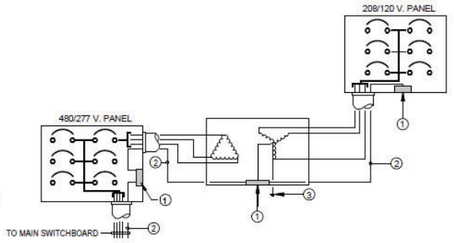

D2 GROUNDING DIAGRAM
SCALE: NONE

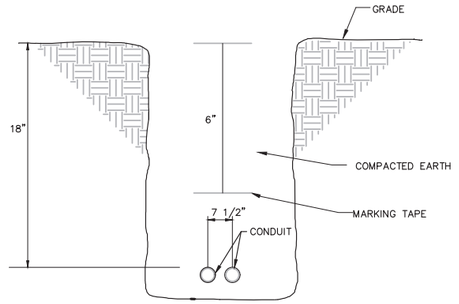

C2 TRENCH DETAIL
SCALE: NONE

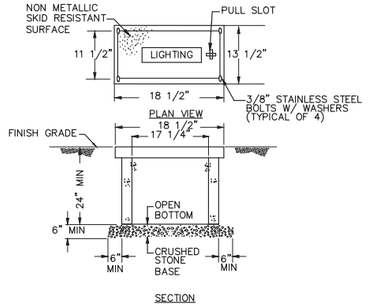

SECTION

NOTES:
1. THIS IS A TYPICAL DETAIL. REFER TO DRAWING FOR ACTUAL DIMENSIONS OF HANDHOLE WHICH MAY DEVIATE FROM THESE DIMENSIONS. REFER TO THE SITE PLAN FOR QUANTITY OF CONDUITS AND THE "SERVICE" REQUIRED ON THE COVER.

2. THIS HANDHOLE IS INTENDED FOR NON-DELIBERATE VEHICULAR TRAFFIC ONLY, ANSI TIER 22 (22,500 POUND DESIGN LOAD)

3. HANDHOLE SHALL BE PREFABRICATED POLYMER CONCRETE AGGREGATE EQUAL TO QUAZITE OR EQUAL PRE CAST CONCRETE CONSTRUCTION.

A2 TYPICAL PREFABRICATED HANDHOLE DETAIL
SCALE: NONE

DATE: _____ TIME: _____
SERVER: _____ LAYOUT: _____
PATH: _____
DRAWING NAME: _____
PAGE SETUP: _____
DESIGNER: _____ PROJ. MGR: _____

NO.	BY	DATE	REVISIONS:

CAUTION: The engineer preparing these plans will not be responsible for, or liable for, unauthorized changes to or uses of these plans. All changes to the plans must be in writing and must be approved by the preparer of these plans.

REGISTERED PROFESSIONAL ENGINEER
JOHN L. MOFFATT
No. 22650
Exp. 03/31/25
ELECTRICAL
STATE OF CALIFORNIA

NV5
15092 AVENUE OF SCIENCE, SUITE 200
SAN DIEGO, CA 92128
P: 858.385.0500 WWW.NV5.COM

EL CENTRO WWTP – UV DISINFECTION IMPROVEMENTS
ELECTRICAL DIAGRAMS AND POWER ONE LINE DIAGRAM

PREPARED FOR: CITY OF EL CENTRO
DATE SUBMITTED: JUNE 2024

DRAWING NUMBER
E-13
OF 21 SHEETS

SCALE
VERTICAL: 1"=
HORIZONTAL: 1"=

JOB NUMBER
227521-0001309.05

City Council of the City of El Centro
1275 W. Main Street
El Centro, CA 92243
SUBMITTED
ACTION ITEM (ID # 2024-197)

Item: 7.
Meeting: 11/5/2024 11:30 AM
Department:
Category: Action Item
Prepared by: Felix DeLeon , Senior Engineer
Department Head: Abraham Campos
DOC ID: 2024-197

Granting of an Easement to the Imperial Irrigation District at the City of El Centro Police Station.

CITY MANAGER'S RECOMMENDATION:
Approve a grant of easement in favor of Imperial Irrigation District and direct the City Manager to execute the grant of easement and any necessary supporting documents.

FISCAL IMPACT:
N/A

STRATEGIC PLANNING PROGRAM 2022-2027 RELATION:
Community Health, Safety & Welfare

DUE DILIGENCE CHECK FOR CONTRACTORS/CONSULTANTS: DID THE DEPARTMENT VERIFY CURRENT EL CENTRO BUSINESS LICENSE, CONTRACTOR'S LICENSE, REFERENCE CHECKES, INSURANCE, ETC.:
N/A

BACKGROUND:
In construction of the new City of El Centro Police Station, a new electrical service for the station will be required for permanent power of the new El Centro Police Station. As part of the process to power the new Police Station, Imperial Irrigation District requires an easement to be established for the new service equipment to be installed within the property line of the City of El Centro Police Station.

DISCUSSION:
Staff has reviewed the grant of easement and agrees with the scope.

CONCLUSION:
Approve a grant of easement in favor of Imperial Irrigation District and direct the City Manager to execute the grant of easement and any necessary supporting documents.

ATTACHMENTS:
1. Exhibit A and B IID Easement - El Centro Police Station
2. Grant of Easement (IID) - El Centro Police Station

EXHIBIT "A"

EL CENTRO POLICE STATION

ELECTRICAL EASEMENT

LEGAL DESCRIPTION:

BEING PORTION OF THE EAST HALF OF LOT 3, BLOCK 11 OF MAP NO. 239, CITY OF EL CENTRO, COUNTY OF IMPERIAL, ON FILE IN BOOK 4, PAGE 11 OF OFFICIAL MAPS IN THE IMPERIAL COUNTY RECORDERS OFFICE, DESCRIBED AS FOLLOWS;

BEGINNING AT THE SOUTHEAST CORNER OF THE INTERSECTION OF THE SOUTH RIGHT OF WAY LINE OF BROADWAY AVENUE WITH THE EAST RIGHT OF WAY LINE OF N. 12TH STREET;

THENCE SOUTH 00° 42' 40" EAST, ALONG THE EAST RIGHT OF WAY LINE OF N. 12TH STREET, A DISTANCE OF 174.00 FEET TO THE **TRUE POINT OF BEGINNING;**

THENCE ALONG THE FOLLOWING COURSES:

1. EAST, 23.14 FEET;
2. SOUTH 10.00 FEET;
3. WEST 23.00 FEET
4. NORTH 00° 42' 40" WEST, 10.00 FEET TO THE **TRUE POINT OF BEGINNING.**

10/08/24

RAUL O. MORENO DATE
PLS 9694

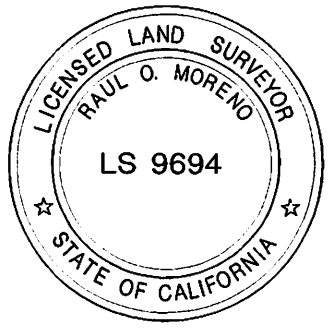

EXHIBIT "B"

EL CENTRO POLICE STATION ELECTRICAL EASEMENT

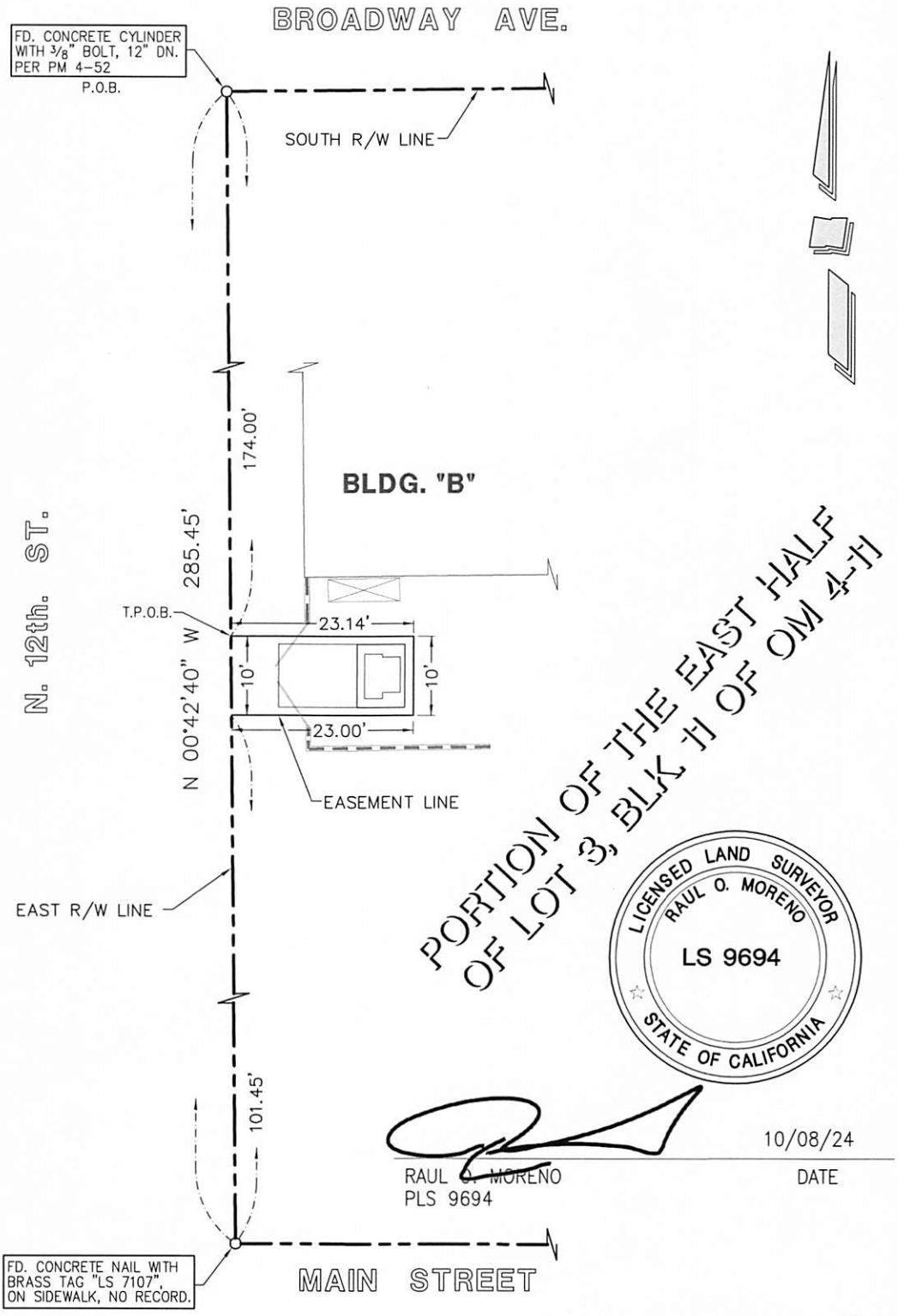

PAGE 1 OF 1

23-135

Recording Requested By
Imperial Irrigation District

And When Recorded Mail To:

Imperial Irrigation District
Attn: Real Estate Section
P.O. Box 937
Imperial, CA 92251

Space Above This Line For Recorder's Use

APN: 053-191-001

Documentary Transfer Tax $ R& T §11922; Gov Code §6103
_____Computed on Full Value of Property conveyed, or
_____Computed on Full Value less liens & encumbrances
remaining thereon at time of sale

_____
Signature of Declarant or Agent Determining Tax – Firm Name

EASEMENT

THE CITY OF EL CENTRO, a municipal corporation and charter city of the State of California hereby grants to the **IMPERIAL IRRIGATION DISTRICT**, an irrigation district organized and existing under the laws of the State of California, an easement and right-of-way in, upon, over, under and across the lands hereinafter described, to erect, construct, change the size of, improve, reconstruct, relocate, repair, maintain and use facilities consisting of:

1. Underground/Overhead facilities and appurtenances for the transmission and distribution of electricity.

2. Communication facilities and appurtenances.

The above facilities will be installed at such locations and elevations upon, along, over and under the hereinafter described easement as Grantee may now or hereafter deem convenient or necessary. Grantee also has the right of ingress and egress, to, from and along this easement in, upon, over and across the hereinafter described lands. Grantee has the right to require the easement be kept clear from explosives, buildings, structures, and materials that Grantee considers incompatible for which this easement is granted.

The property in which this easement and right-of-way is hereby granted is situated in the County of Imperial, State of California, described as follows:

See attached "Exhibit A" legal description

The easement in the aforesaid property shall be a strip of land, including all the area lying between the exterior sidelines, which sidelines, measured at right angles, on each exterior side of each and every facility installed, as shown on Exhibit "B", attached hereto and made a part hereof.

Grantor shall not erect, place or construct, nor permit to be erected, placed or constructed, any building or other structure, plant any tree, drill or dig any well, within this easement.

Grantor shall not increase or decrease the ground surface elevations within this easement after installation of Grantee's facilities, without prior written consent of Grantee, which consent shall not unreasonably be withheld.

Grantor further grants to Grantee the right to assign any or all of the rights granted in this easement in whole or in part to other companies providing utility or communication facilities/services.

Grantee shall have the right but not the duty, to trim or remove trees and brush along or adjacent to this easement and remove roots for within this easement whenever Grantee deems it necessary. Said right shall not relieve Grantor of the duty as owner to trim or remove trees and brush to prevent danger or hazard to property or persons.

CONDUITS CARRY HIGH VOLTAGE ELECTRICAL CONDUCTORS, therefore Grantor shall not make or allow any excavation or fill to be made within this easement WITHOUT FIRST NOTIFYING IMPERIAL IRRIGATION DISTRICT by calling 1-800-DIGALERT (Underground Alert), and OBTAINING PERMISSION.

This easement shall be binding upon and inure to the benefit of successors, heirs, executors, administrators, permittees, licensees, agents or assigns of Grantor and Grantee.

IN WITNESS WHEREOF, Grantor executed this instrument this _____ day of _____, 20____.

CITY OF EL CENTRO, a Municipal Corporation and charter city of the State of California

By: _____
Name: _____
Its: _____

File# 2985

EXHIBIT "A"

EL CENTRO POLICE STATION

ELECTRICAL EASEMENT

LEGAL DESCRIPTION:

BEING PORTION OF THE EAST HALF OF LOT 3, BLOCK 11 OF MAP NO. 239, CITY OF EL CENTRO, COUNTY OF IMPERIAL, ONFILEINBOOK4, PAGE **11** OF OFFICIAL MAPS IN THE IMPERIAL COUNTY RECORDERS OFFICE, DESCRIBED AS FOLLOWS;

BEGINNING AT THE SOUTHEAST CORNER OF THE INTERSECTION OF THE SOUTH RIGHT OF WAY LINE OF BROADWAY AVENUE WITH THE EAST RIGHT OF WAY LINE OF N. 12TH STREET;

THENCE SOUTH 00° 42' 40" EAST, ALONG THE EAST RIGHT OF WAY LINE OF N. 12TH STREET, A DISTANCE OF 174.00 FEET TO THE **TRUE POINT OF BEGINNING;**

THENCE ALONG THE FOLLOWING COURSES:

1. EAST, 23.14 FEET;
2. SOUTH 10.00 FEET;
3. WEST 23.00 FEET
4. NORTH 00° 42' 40" WEST, 10.00 FEET TO THE **TRUE POINT OF BEGINNING.**

EXHIBIT "B"

EL CENTRO POLICE STATION ELECTRICAL EASEMENT

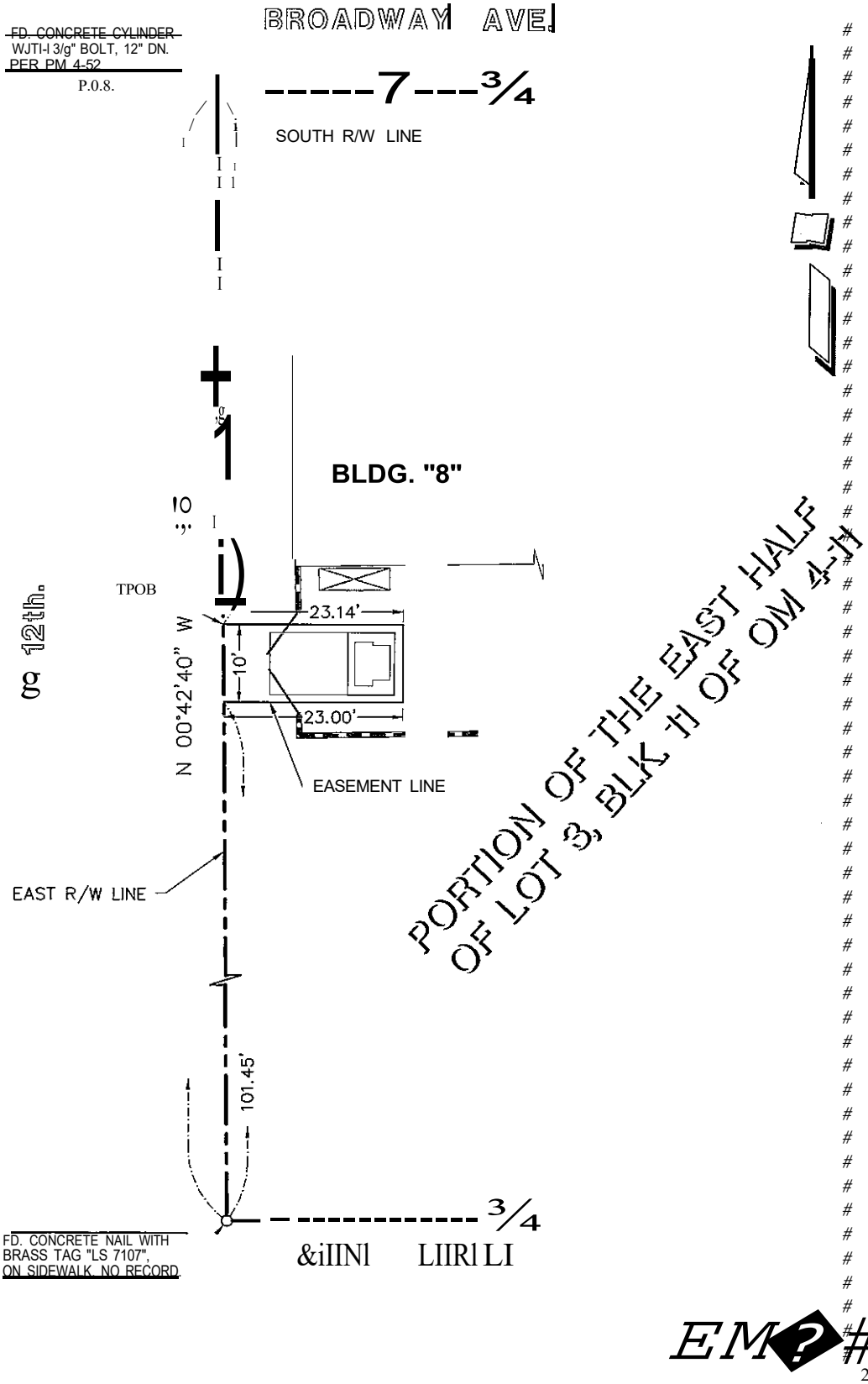

23-135

Adopt Resolution. 24- , RESOLUTION OF THE CITY COUNCIL AUTHORIZING THE EL CENTRO POLICE DEPARTMENT TO PARTICIPATE IN THE DEPARTMENT OF ALCOHOLIC BEVERAGE CONTROL GRANT PROGRAM.

CITY MANAGER'S RECOMMENDATION:
Adopt Resolution. 24- , RESOLUTION OF THE CITY COUNCIL AUTHORIZING THE EL CENTRO POLICE DEPARTMENT TO PARTICIPATE IN THE DEPARTMENT OF ALCOHOLIC BEVERAGE CONTROL GRANT PROGRAM.

FISCAL IMPACT:
With the acceptance of the Alcoholic Beverage Control Grant Program, a corresponding budget reimbursement account of $39,500 will be processed and included as part of the adjusted Fiscal Year 2024/2025 Budget. No match by the City is required.

STRATEGIC PLANNING PROGRAM 2022-2027 RELATION:
Community Health, Safety & Welfare

DUE DILIGENCE CHECK FOR CONTRACTORS/CONSULTANTS: DID THE DEPARTMENT VERIFY CURRENT EL CENTRO BUSINESS LICENSE, CONTRACTOR'S LICENSE, REFERENCE CHECKES, INSURANCE, ETC.:

BACKGROUND:
The Department of Alcoholic Beverage Control (ABC) has conditionally approved the city's application for funding under the ABC Grant Program in the amount of $39,500. Our ABC grant will provide the El Centro Police Department with funding to address quality of life issues that include the illegal purchasing and distribution of alcoholic beverages by and to minors. Additionally, our efforts will focus on inspections and education of ABC license holders.

DISCUSSION:
The Department of Alcoholic Beverage Control (ABC) provides grant funding to local Police Departments and Sheriff's Departments to reduce alcohol-related harm in California. ABC grants enable the selected agencies to expand their present efforts in addressing alcohol-related problems through a comprehensive ABC program that will encompass a wide range of strategies. Local law enforcement officers assigned to the project work closely with ABC agents and receive training in ABC law, alcohol enforcement strategies, and community resources.

The program's success can be measured quantitatively by the reduction in alcohol-related arrests, crimes, and calls for services in many jurisdictions. Further quantitative measures include the number of administrative accusations registered, arrests and citations, decoy programs, and community outreach meetings. Qualitative measures include declarations

of satisfaction from local officers and community members, and visible improvements in the physical conditions of targeted communities.
The main success of the program has been its effectiveness in strengthening the working relationship between ABC and the various local law enforcement agencies in California. This State and local partnership results in a more effective use of human resources, a reduction in crime, and a more efficient use of taxpayer funds. Of great interest have been the many businesses which voluntarily take active steps to eliminate loitering, litter, graffiti, drug paraphernalia, and excessive signage in windows.

The results have reduced calls for police service and improved conditions in neighborhoods impacted negatively by liquor stores and bars. Also, of note is the program's success in working with communities sponsoring large special events, which have in the past resulted in violence and crime, with alcohol being one of the root causes.

CONCLUSION:

Adopt Resolution. 24- , RESOLUTION OF THE CITY COUNCIL AUTHORIZING THE EL CENTRO POLICE DEPARTMENT TO PARTICIPATE IN THE DEPARTMENT OF ALCOHOLIC BEVERAGE CONTROL GRANT PROGRAM

ATTACHMENTS:

1. FY24 ABC Grant Resolution
2. FY24 ABC Grant Award Notification

RESOLUTION NO 24-

RESOLUTION OF THE CITY COUNCIL AUTHORIZING
THE EL CENTRO POLICE DEPARTMENT TO PARTICIPATE IN THE
DEPARTMENT OF ALCOHOLIC BEVERAGE CONTROL GRANT PROGRAM

WHEREAS, the Department of Alcoholic Beverage Control ("ABC") provides funds to aid in the enforcement and education of laws related to the possession, purchase, and sale of alcoholic beverages, and the El Centro Police Department has submitted a grant application; and

WHEREAS, ABC has awarded thirty-nine thousand, five hundred dollars ($39,500) to the El Centro Police Department for the purpose of conducting minor decoy operations, shoulder tap operations, impact inspections and holiday enforcement operations and the El Centro Police Department is required to execute a certificate of acceptance for that grant; and

WHEREAS, such funding will allow for reimbursement of operational overtime, and authorized travel for grant activities; and

NOW, THEREFORE THE CITY COUNCIL OF THE CITY OF EL CENTRO, CALIFORNIA, DOES HEREBY RESOLVE AS FOLLOWS;

1. That the foregoing is true, correct and adopted.

2. That the City Council hereby accepts the grant funds of thirty-nine thousand, five hundred dollars ($39,500) for the Program.

3. That the City's Police Chief or City Manager is authorized to execute, on behalf of the City, the grant award agreement, if any, for the Program, a copy of which will be on file in the Office of the City Clerk, including any extensions, or amendments thereof.

4. That the City agrees to comply with all requirements for the Program (including any extensions or amendments thereof) and that funds will be appropriated as required thereby.

5. That grant funds received hereunder shall not be used to supplant expenditures controlled by this body.

PASSED AND ADOPTED at a regular meeting of the City Council of the City of El Centro held on the day of , 2024

CITY OF EL CENTRO

By _____
Sylvia Marroquin, Mayor

ATTEST:

By _____
Norma Wyles, City Clerk

APPROVED AS TO FORM:

Office of the City Attorney

By _____
Elizabeth Martyn, City Attorney

STATE OF CALIFORNIA)
COUNTY OF IMPERIAL) ss
CITY OF EL CENTRO)

I, Norma Wyles, City Clerk of the City of El Centro, California, do hereby certify that the foregoing Resolution No. 24- was duly and regularly adopted at a regular meeting of the City Council of the City of El Centro, California, held on the day of , 2024, by the following vote:

AYES:
NOES:
ABSENT:
ABSTAINED:

By _____
Norma Wyles, City Clerk

DEPARTMENT OF ALCOHOLIC BEVERAGE CONTROL
3927 Lennane Drive, Suite 100
Sacramento, CA 95834
(916) 419-2500

September 26, 2024

Commander Rene McNish
El Centro Police Department
150 N. 11th Street
El Centro, CA 92243

Re: ABC-OTS Grant Program

Dear Commander McNish:

Congratulations. Your agency has been selected to participate in the Department of Alcoholic Beverage Control's ABC-OTS Grant Program. Funding for this project is provided by the Office of Traffic Safety through the National Highway Traffic Safety Administration.

We anticipate operations to begin upon completion of the one-day mandatory training class for your operations officer. Fiscal Officers will be contacted by our Fiscal Coordinator; Kristine Okino for training how to submit claims for reimbursement.

Since the grant starts October 1, 2024, you can make pre-paid travel arrangements on or after that date for your operations officer to attend the training. Pre-paid travel purchased prior to October 1st will not be reimbursed. The information regarding the date, location and authorized per diem rates are enclosed.

To expedite the issuance of your contract, please review and complete the enclosed ABC-OTS Grant Program Information Sheet. In addition, we will also need a resolution from your agency's governing body. Since these resolutions must be put on calendar, we ask that you do so as soon as possible.

Please mail, fax, or email this information to our Grant Coordinator; Diana Fouts-Guter, at 3927 Lennane Drive, Suite 100, Sacramento, CA 95834, Fax: (916) 928-7625, or at Diana.fouts-guter@abc.ca.gov.

If you have questions, please contact Supervising Daniel Sumida via email at daniel.sumida@abc.ca.gov.

We appreciate your prompt response and look forward to working with your agency.

Sincerely,

J. McCullough

Joseph McCullough
Director

Enclosures

ABC-OTS Grant Trainings

PRE-PAID TRAVEL ARRANGEMENTS TO BE MADE ON OR AFTER OCTOBER 1, 2024

Pre-paid travel purchased prior to Oct. 1 will not be reimbursed.

ABC will reimburse one person to attend

Operations Officers must be in attendance

Tuesday, October 15, 2024
10:00 am – 3:00 pm
Dept. of Alcoholic Beverage Control
3927 Lennane Drive, #100
Sacramento, CA 95834
(916)419-2500

Sacramento Lodging:
(Must be 50 miles or more from office)
$150.00 & tax per night
Some suggestions that have previously offered the State rate:
Homewood Suites Sacramento Airport Natomas, Hampton Inn & Suites Sacramento Airport and Hilton Garden Inn So. Natomas

Mileage: .67 per mile (requires maps)

NO MEAL REIMBURSEMENT ON TRAVEL WITHIN 50 MILES OF OFFICE

When travel status is		Maximum reimbursement for actual expenses is
More than 12 but less than 24 hours		Up to 75% of the applicable M&IE standard rate for each calendar day in a travel status.
24 hours or more, on	The day of departure	Up to 75% of the applicable M&IE standard rate.
	Full days of travel	Up to 100% of the applicable M&IE standard rate.
	The last day of travel	Up to 75% of the applicable M&IE standard rate.
Travel less than 12 hours		Not eligible for M&IE reimbursement

GSA Standard M&IE Rates 2025 Federal Fiscal Year:

M&IE Total	Breakfast	Lunch	Dinner	Incidental Expenses	First & Last Day of Travel
Up to $68	$16	$19	$28	$5	Up to $51.00

RECEIPTS REQUIRED FOR EVERY EXPENSE, (I.E, BREAKFAST, DINNER, HOTEL, AIRFARE)

State of California
Department of Alcoholic Beverage Control
ABC-OTS Grant Program Information Sheet

Contract will be between: The Department of Alcoholic Beverage Control and
The City of El Centro through the El Centro Police Department

Mailing Address: 150 N. 11th Street, El Centro, CA 92243

Funding Amount: $ 39,500

Authority to Sign Contract Name/Title: _____

Address if different from above: _____

Federal Tax ID Number: _____

Operations Officer: **Attending Training (Circle)**
YES/NO

Print Name: _____

Telephone Number: _____

Email Address: _____

Fiscal Officer (responsible for preparing billings to ABC):

Print Name: _____

Telephone Number: _____

Email Address: _____

RETURN COMPLETED FORM TO:

Diana Fouts-Guter
Grant Coordinator
Department of Alcoholic Beverage Control
3927 Lennane Drive, Suite #100
Sacramento, CA 95834
Diana.fouts-guter@abc.ca.gov
Fax: (916)928-7625
Office: (916)928-9807

Community Sponsorship - Soroptimist International of El Centro

CITY MANAGER'S RECOMMENDATION:
Discussion and any necessary action regarding the community sponsorship request

FISCAL IMPACT:
Funding is available from the Community Sponsorship Fund 1201-610139. The available balance is $1,627.00.

STRATEGIC PLANNING PROGRAM 2022-2027 RELATION:

DUE DILIGENCE CHECK FOR CONTRACTORS/CONSULTANTS: DID THE DEPARTMENT VERIFY CURRENT EL CENTRO BUSINESS LICENSE, CONTRACTOR'S LICENSE, REFERENCE CHECKES, INSURANCE, ETC.:
N/A

BACKGROUND:
Since 1940, Soroptimist International of El Centro has served the needs of El Centro, as well as the Imperial Valley's women and girls, by helping them achieve their individual and collective potential. They are a non-profit organization dedicated to the vision that women and girls receive resources and opportunities to reach their full potential and live their dreams. They are a global volunteer organization that provides women and girls with access to the education they need to achieve economic empowerment. It is through their vision and core values that they serve El Centro and the greater Imperial Valley.

Their most important program that meets the needs of the Imperial Valley women and girls is the Live Your Dream: Education & Training Awards for Women, which is a unique education award for women who provide the primary financial support for their families and is a resource that they use to improve their education, skills and employment prospects. Every year, more than $3,000 in education grants are distributed to women in El Centro and Imperial Valley. These funds offset the costs associated with their plans to achieve their higher education. This includes transportation, housing, children, food and tuition.

DISCUSSION:
The Afternoon Tea Party was created to help raise funds to provide a memorable holiday experience for over 250 children throughout the Imperial Valley. This year, they have extended the invite to children from the North of Imperial Valley, which includes Calipatria, Niland, Bombay Beach, and surrounding areas. The majority of these children have never been to a movie theater, so the project, "Christmas at the Movies", was created.

Proceeds from the Afternoon Tea Party will help fund this project, which will provide more families with a memorable experience this December, as well as programs and projects

that provide women and girls with resources to reach their full potential, and help Soroptomist International continue their mission.

The City Manager's Office has reviewed the application and the requirements of the policy statement have been met. The Mayor has reviewed the request and recommends that the Council consider a sponsorship in the amount of $500.

CONCLUSION:
Staff seek direction and necessary action regarding the requested cash sponsorship.

ATTACHMENTS:
1. Sponsor Application
2. Sponsorship Form

CITY MANAGER
'24 OCT 1 AM9:08

CITY OF EL CENTRO
COMMUNITY SPONSORSHIP PROGRAM
APPLICATION

APPLICANT INFORMATION:
(Applicant is the contact person for City officials and must be at least 18 years of age.)

Organization Name: Soroptimist International of El Centro

Non-Profit ID # / 501(C) 3 #: 95-698092

Contact Person: Ivonne Sotomayor, President

Address: 619 Flying Cloud Dr, Imperial CA, 92251
(Street Number) (Street Name) (City) (State) (Zip Code)

Phone: 760-587-5223 **Cell / Pager:** same

E-mail: ivonne_sotomayor123@hotmail.com

Amount Requesting From Community Sponsorship Fund: $ 750 - Empress Catherine of Russia Sponsorship

TYPE OF EVENT:
(*check one*)

- ☐ **Promotional Event**
- ☐ **Cultural Event**
- ☐ **Athletic Event**
- ☐ **Educational Event**
- ☐ **Entertainment Event**
- ☒ **Other** Charitable

EVENT INFORMATION:

Event Name: Soroptimist International of El Centro Afternoon Tea Party Annual Fundraiser

Event Date: November 17, 2024 **Time of event:** 12:00 PM (Begin) 4:00 PM (End)

Event Address: Lisa Tucker Center Parking Lot - 447 W Aten Rd, Imperial, CA 92251
(Location Name) (Street Number) (Street Name) (City)

EVENT DESCRIPTION:

Purpose: Charitable event for SI of El Centro's Annual "Christmas At The Movies" Project for CASA, WomenHaven & Imperial Valley North End children.

Activities Planned: Tea Party and luncheon

Amount of People Expected: 350

Other Information:

I declare under penalty of perjury under the laws of the State of California that the foregoing is true and correct.

Applicant's signature: Ivonne Sotomayor Date: 09/26/2024

CITY OF EL CENTRO
COMMUNITY SPONSORSHIP PROGRAM
APPLICATION CHECK LIST

DOCUMENTS THAT MUST BE INCLUDED WITH APPLICATION:

☒ **Pre-Program Financial Affidavit**
(Indicating proposed profit or loss, income from all sources, all expenditures, in-kind contributions, all sponsorship contributions, volunteers etc…) ***NOTE - See Pre-Program Affidavit that shows Estimated Profit & Loss and last year's Profit and Loss - event was not free to public.***

☒ **Statement from Authorizing Agent**
(Indicating that admission to the event is free and open to the public, and explaining how the program will benefit El Centro residents.) ***NOTE - See Pre-Program Affidavit that shows Estimated Profit & Loss and last year's Profit and Loss - event was not free to public.***

☒ ***Current Proof of 501(C) 3***
(Or proof that a 501(C) 3 organization is a recipient of the program proceeds.)

☒ ***Program Sponsorship Package or Statement***
(Indicating the City of El Centro's sponsorship benefits.)

Organization's Mission Statement
(Purpose and goals of the organization.)

DOCUMENTS THAT MUST BE SUBMITTED AT LEAST 45 DAYS BEFORE THE PROGRAM:

☐ **Proof of all Permits, Clearances, Insurances, and Program Authorizations**
(Within time restraints in compliance with the Code of the City of El Centro, policies and Special Event Policy requirements.)

NOTE - Permits will be pulled are from the City of Imperial, some permits are only to be submitted less than 30 days from event.

DOCUMENTS THAT MUST BE SUBMITTED WITHIN 30 DAYS AFTER THE PROGRAM:

☐ ***Post Program Financial Affidavit***
(Indicating actual profit or loss, income from all sources, all expenditures, In-Kinds contributions, all sponsorship contributions, volunteers etc…)

FOR CITY OF EL CENTRO
OFFICIAL USE ONLY

COMMUNITY SPONSORSHIP PROGRAM
APPLICATION REVIEW FORM

Program Name: Afternoon Tea Party Annual Fundraiser

Program Date: 11-17-24 **City Manager's Review Date:** 10-1-24

DOCUMENTS SUBMITTED:

Documents that must be included with application:

- ☑ Pre-Program Financial Affidavit
- ☑ Statement from Authorizing Agent
- ☑ Current Proof of 501(C) 3 (other)
- ☑ Program Sponsorship Package
- ☑ Mission Statement
- ☐ Copy of Current Business License N/A

Documents that must be submitted 45 days before program:

- ☐ Proof of Permits _____
- ☐ Proof of Clearances _____
- ☐ Proof of Insurance _____
- ☐ Program Authorizations _____
- ☐ Other _____

MAYOR'S REVIEW:

- ☒ **Approved**
  Forward to City Council for Consideration
- ☐ **Denied**
  Reason: _____

Comments: The Mayor recommends $500.00

Sylvia Marroquin, signed by Cindy DeZilva — 10/8/24

Mayor's Authorization Signature **Date**

CITY SPONSORSHIP SUMMARY:

City Council Date: 11-5-24 ☐ Approved ☐ Denied

Cash Sponsorship Amount: $_____

Requisition Process Date: _____ P.O #: _____

Rev 03/2020

Pre-Program Financial Affidavit

	Current Year - Projected		Previous Year	
Income		Totals		Totals
Ticket Sales	$9,214.00		$4,067.74	
Sponsorships	$12,550.00		$7,460.00	
Donations	$200.00		$600.00	
Bar Income	$2,000.00		$2,328.00	
Raffle Income	$1,000.00		$705.00	
Teacup Sales	$0.00	$24,964.00	$270.00	$15,430.74
Expenses				
Permits	$275.00		$60.00	
Advertising	$100.00		$58.19	
Teacups	$2,000.00		$1,392.86	
Backdrops	$0.00		$214.81	
Tea Supplies	$900.00		$219.24	
Raffle Item Supplies	$100.00		$170.81	
Costumes	$0.00		$100.15	
Printing	$90.00		$980.16	
Bar Supplies	$2,500.00		$375.36	
Entertainment	$1,250.00		$450.00	
Photographer	$400.00		$150.00	
Event Staff	$200.00		$200.00	
Food	$6,000.00			
Venue	$4,189.00		$6,902.40	
Bank Transaction Fees	$100.00	$18,104.00	$1,056.99	$12,330.97

The Soroptimist Intl. of El Centro

Afternoon Tea Party

ANNUAL FUNDRAISER

PRICING & SPONSORSHIP INFORMATION

Sunday, November 17, 2024 | Noon - 4pm
Lisa Tucker Center - 447 W Aten Rd, Imperial, CA
All Ages | Afternoon Tea Dress Code

******SALES CLOSING DATE - OCTOBER 15, 2024 ******

TICKETS

- ☐ **TICKET - $60**
  General Admission with tea service and teacup with saucer.
- ☐ **TICKET ADULT & CHILD (Ages 3-12) - $75**
  General Admission for (2) with tea service and teacup with saucer.
- ☐ **ADDITIONAL CHILD (Ages 3-12) - $10**
- ☐ **TABLE - $480**
  General Admission for (8) with tea service and teacups with saucers.
- ☐ **DRINK TICKET WRISTBAND - $30**
  Pre-purchased tab wristband for 3 discounted drink tickets . Must be 21 + to purchase.

ADVERTISING

- ☐ **DIGITAL PROGRAM ADVERTISING - VARIOUS**
  1/4 Page $250 | 1/2 Page - $500 | Full Page - $750.

SPONSORSHIPS

- ☐ **FRIEND OF SOROPTIMIST - $100**
  1 reserved seat | Name on event slideshow, name listed on website for one year & verbal acknowledgment during event.
- ☐ **DUCHESS ANNE OF BEDFORD PATRONAGE - $300**
  Reserved seating for 2 | 2 raffle tickets | Logo on event slideshow, social media promotion, digital program (1/4 page ad) & verbal acknowledgment during event.
- ☐ **QUEEN CATHERINE OF BRAGANZA PATRONAGE - $500**
  Reserved seating for 4 | 4 raffle tickets. | Logo on event slideshow, social media promotion, digital program (1/2 page ad) & verbal acknowledgment during event.
- ☐ **EMPRESS CATHERINE OF RUSSIA PATRONAGE - $750**
  Reserved seating for 8 | 4 drink wristbands | Logo on event slideshow, social media promotion, digital program (Full page ad) & verbal acknowledgment during event.

CONTACT INFORMATION

NAME _____

BUSINESS NAME _____

ADVERTISING/SPONSOR DISPLAY NAME _____

PHONE # _____

EMAIL _____

STREET ADDRESS _____

CITY _____ STATE _____ ZIP _____

PAYMENT MADE BY:

- ☐ Zeffy.com
  (Scan QR code to right)
- ☐ Cash
- ☐ Check # _____

Payable to: ***Soroptimist International of El Centro***
Mail - PO Box 23, El Centro, CA 92244

For More Information Please Contact
IVONNE SOTOMAYOR
ivonne_sotomayor123@hotmail.com | 760-587-5223

All Artwork, including Logos must be received by October 15, 2024. Preferred format PNG with 300 DPI or higher - Email to: SIELCENTRO@SOROPTIMIST.NET

Soroptimist International of El Centro is a 501(c)3 non-profit organization. Federal Tax ID: 95-6098092.
Please consult your tax advisor regarding deductibility of your donation.

The Soroptimist Int'l. of El Centro
Afternoon Tea Party
ANNUAL FUNDRAISER

SOROPTIMIST INTERNATIONAL OF EL CENTRO
PO Box 23 | El Centro, CA 92244| www.sielcentro.com

BOARD OF DIRECTORS
2024-2026

IVONNE SOTOMAYOR
President

JESSIE VILLANUEVA
Co-President

VALENTINA ESTES
1st Vice President

MARTHA CARDENAS-SINGH
2nd Vice President

ELVIRA GONZALEZ
Treasurer

MARLENA RENTERIA
1ST Secretary

VANESSA LANDEROS
2nd Secretary

LYDIA ROBLES
2nd Co-Secretary

AJ GADDIS
Two Year Director

MIA HERNANDEZ
One Year Director

September 1, 2024

Dear Friend of Soroptimist International of El Centro,

We are excited to announce the 2024 annual "***Afternoon Tea Party***" fundraiser and we invite you to play an important part. The event will be held on **Sunday, November 17th, 2024**, from **Noon to 4:00 p.m.** at the **Lisa Tucker Center in Imperial, CA**. More than 200 people attended last year's event and we are looking forward to another wonderful year as we expect to have more than 300 attendees join us in this delightful family event.

The ***Afternoon Tea Party*** was created to help raise funds to provide a memorable holiday experience for over 250 children throughout the Imperial Valley. This year we plan to extend the invite to children from the North end of our Imperial Valley which includes Calipatria, Niland, Bombay Beach and surrounding areas. The majority of these children had never been to a movie theater before this event, and with your help, we will provide many more families with a memorable "***Christmas At The Movies***" experience this December.

Since 1940, SI El Centro has been serving the needs of the Imperial Valley's women and girls by helping women and girls achieve their individual and collective potential, realize aspirations and have an equal voice in creating strong, peaceful communities worldwide.

We could not have gotten this far without your support, and we can only continue our mission with your help. Proceeds of the ***Afternoon Tea Party*** will go to fund the "***Christmas At The Movies***" project, and any remainder will be used to fund SI El Centro's programs and projects that provide women and girls with resources and opportunities to reach their full potential and help us continue our mission.

We invite you to become a sponsor of this joyous event, Please see the attached information for more details. Should you have any questions or require additional information, please feel free to contact me at (760) 587-5223 (call or text) and/or by email at ivonne_sotomayor123@hotmail.com. I look forward to hearing from you and answering any questions you may have.

Sincerely,

Ivonne Sotomayor
2024-2025 President
Soroptimist International of El Centro
ivonne_sotomayor123@hotmail.com

Jessie Villanueva
2024-2025 Co-President
Soroptimist International of El Centro
jessiev86@gmail.com

SOROPTIMIST
Investing in Dreams

Soroptimist International of El Centro is a 501(c)3 non-profit organization.
Federal Tax ID: 95-6098092. Please consult your tax advisor regarding deductibility of your donation.

Ratify Letter of Support - Workforce Accelerator Grant Project in Imperial Valley

CITY MANAGER'S RECOMMENDATION:
Ratify letter of support request received from the Institute of Local Government for the Workforce Accelerator Grant Project in the Imperial Valley

FISCAL IMPACT:
N/A

STRATEGIC PLANNING PROGRAM 2022-2027 RELATION:
Economic Opportunity
Financial & Governance Stability & Sustainability
Environmental Sustainability & Infrastructure
Community Health, Safety & Welfare

DUE DILIGENCE CHECK FOR CONTRACTORS/CONSULTANTS: DID THE DEPARTMENT VERIFY CURRENT EL CENTRO BUSINESS LICENSE, CONTRACTOR'S LICENSE, REFERENCE CHECKES, INSURANCE, ETC.:
N/A

BACKGROUND:
The Institute of Local Government (ILG) has been serving local officials' information needs for 65 years. Founded in 1955, local agencies were beginning to recognize the need for cities and counties to cooperate on regional issues. Through its research capacity, publications and training programs, the Institute has been a leader in addressing topics that ultimately have become urgent public issues. The Institute has also responded in a timely way to current issues of concern for cities and counties.

ILG's mission is to empower local government leaders and deliver real-world expertise to help them navigate complex issues, increase their capacity, and build trust in their communities. Their vision is a California where all local government leaders are trusted by the people they serve because of exceptional leadership and an endless pursuit towards thriving and resilient communities in which to live and work.

DISCUSSION:
The Workforce Accelerator Fund is a program that supports projects that create and implement innovative workforce service models. Since 2014, the Workforce Accelerator Fund has supported new and exciting projects that design, develop, and implement innovative workforce service models that lead to quality jobs and accelerate employment among California workers. The fund is a collaboration between the California Workforce Development Board (CWDB), Employment Development Department (EDD), and the California Labor & Workforce Development Agency (LWDA). The fund's goals include: Improving labor market and skills outcomes, accelerating employment, bridging education

and workforce gaps, and implementing and scaling up successful innovations.

The City of El Centro started working with ILG through its BOOST (Build-Organize-Optimize-Strengthen-Transform) Program in 2019. ILG has facilitated training and discussions that helped the City develop a strategic plan and improve community engagement. ILG continues to be a valuable partner to the City as we enter a new phase of the BOOST Program, focused on the local agencies in the Imperial Valley.

This grant program would offer leadership training for mid-career professionals in Imperial Valley's government sector to help upskill existing staff on management and leadership skills to better prepare them to step into more senior management positions. This will focus on foundational local government functions such as municipal finance, collaborative governance, planning, community engagement, and technological adaptation to meet the challenge of a modern workforce.

CONCLUSION:

Ratify letter of support that was submitted to ILG on Monday, October 28, 2024, per their deadline to submit their proposal.

ATTACHMENTS:

1. Letter of Support - ILG Workforce Accelerator Grant Proj IV
2. ILG IV Workforce Proposal

October 28, 2024

Cedric Ceseña
City Manager
City of El Centro
1275 West Main Street
El Centro, CA 92243
ccesena@cityofelcentro.org

Dear Workforce Accelerator Board,

Please accept this letter of support for the Institute for Local Government's Workforce Accelerator Grant Project in the Imperial Valley.

The City of El Centro first started working with ILG through its BOOST Program in 2019. Through that program, ILG facilitated trainings and discussions that helped the City of El Centro develop a strategic plan, improve our community engagement, and design a community-driven grant for an affordable housing project. ILG continues to be a valuable partner to the City of El Centro as we enter our new phase of the BOOST Program, specifically focused on the local agencies in the Imperial Valley.

The grant funding received through the Workforce Accelerator Grant will help ILG develop a local government leadership training program and a resident academy that will build a new pipeline to public service and improve the work-based learning infrastructure to support the needs of employers and workers already employed in local government agencies in the Imperial Valley. The need for programs such as this is great in the Imperial Valley. We constantly struggle to find qualified applicants to fill our vacant positions.

Because of our remote location, we often find it difficult to recruit from outside of the area. I am confident that developing home-grown public servants will dramatically assist Imperial Valley cities in providing quality services for our residents and uplifting the region by fostering a diverse and vibrant economy. I believe that with the right resources and support, we can empower our workforce and drive meaningful change in the Imperial Valley.

Thank you for your support of the Imperial Valley, and your consideration of this important project. Please feel free to contact me for further information or assistance.

Sincerely,

Cedric Ceseña
City Manager

The Imperial Valley is a forgotten region in the southern-most part of the state, which is now receiving renewed attention because of its abundance of Lithium. As corporations and state agencies swarm in excitement over the opportunities for jobs and economic vitality that the new industry might bring, the local agencies continue to be overwhelmed, understaffed, and unable to engage in a way that could possibly bring sustainable prosperity to the region.

The Institute for Local Government's Big Idea not only builds a sustainable workforce pipeline but also aligns with the Workforce Accelerator Fund's focus on addressing systemic barriers, promoting equity, and advancing job quality in underserved regions like Imperial Valley, with a two-pronged approach that will build a new pipeline to public service and improve the work-based learning infrastructure to support the needs of employers and workers already employed in local government agencies.

A New Local Government Pipeline- Introduction to Local Government Jobs through Resident Academies

This program would create a regional **resident academy** for recent high school and college graduates, providing them with a structured pathway into local government roles such as city management, public works, and planning. The academy would focus on building skills through **hands-on projects, mentorship from experienced government leaders,** and **rotational assignments** across departments in various local agencies. By focusing on entry-level positions, the academy will align with immediate local government staffing needs, addressing specific skills gaps. The academy participants will learn about the career opportunities in local government and work on real-world projects like public engagement, disaster preparedness, housing initiatives, and infrastructure improvements, allowing them to apply academy learning directly in local contexts.

Leadership Development for Mid-Career Professionals

In parallel, the program would offer leadership training for mid-career professionals in Imperial Valley's government sector to help upskill existing staff on management and leadership skills to better prepare them to step into more senior management positions. This will focus on foundational local government functions such as municipal finance, collaborative governance, planning, community engagement, and technological adaptation to meet the challenges of a modern workforce. Using a hybrid model (combining online learning and local workshops), the leadership program will build resilience and innovation capacity within the local government workforce.

Cross-departmental problem-solving sessions will encourage leadership participants to work together, fostering collaboration and innovation in tackling regional issues like economic development, renewable energy opportunities, and public health. Training in data-driven decision-making and emerging technologies like Geographic Information Systems (GIS) and

emergency management software will position local government employees to lead future initiatives with the necessary technical expertise.

Ongoing Support through a Regional Collaborative Hub

ILG will develop a workforce development Hub/Community Forum as part of this Workforce Accelerator Fund initiative. Our Hub/Forum will act as a centralized resource for skills training, leadership development, and job placement. Local government entities, educational institutions, and workforce development boards can coordinate to deliver ongoing training on public sector management, budgeting, and community engagement- so that the Imperial Valley continues to be supported long after this grant expires.

By pooling and sharing resources across municipalities and agencies in Imperial Valley, the Hub will provide a cost-effective means of sharing opportunities, discussing recruitment strategies, and aligning regional priorities such as economic development, agriculture, and sustainability.

The Hub will offer virtual training platforms, using remote learning technology to reduce travel barriers and increase accessibility for government employees and residents across Imperial Valley.

Library Department Presentation

CITY MANAGER'S RECOMMENDATION:
This is an informational item only.

FISCAL IMPACT:
No fiscal impact. Informational presentation only.

STRATEGIC PLANNING PROGRAM 2022-2027 RELATION:
Recreation & Lifelong Learning

DUE DILIGENCE CHECK FOR CONTRACTORS/CONSULTANTS: DID THE DEPARTMENT VERIFY CURRENT EL CENTRO BUSINESS LICENSE, CONTRACTOR'S LICENSE, REFERENCE CHECKES, INSURANCE, ETC.:
N/A

BACKGROUND:
This presentation involves the actions and events that have taken place in the Library in the last year.

DISCUSSION:
This presentation involves the actions and events that have taken place in the Library in the last year.

CONCLUSION:
This presentation involves the actions and events that have taken place in the Library in the last year.

ATTACHMENTS:
1. Library Updates

El Centro Library

El Centro Library Mission

The mission of the El Centro Library is to provide quality materials and programs to meet the educational, informational, cultural, and recreational needs of our diverse community.

The library is committed to supporting lifelong learning using a broad and relevant selection of print and media resources along with access to information through current technology.

A staff dedicated to providing information and assistance in friendly and welcoming environment.

Policies Created

Fine Free Library

This year the El Centro Library became fine free. The goal was to remove barriers to equitable access. Many people were not returning to the library due to their inability to pay the fines.

Circulation

Circulation policies determine how library materials are circulated, including which patrons can borrow what materials, for how long, and with what fees.

Collection Development & Challenge Form

Collection development policies include guidelines for selecting, acquiring, weeding, and challenged materials.

Grants

ESL

$98,844 in total was allocated to the library, but will be divided over the next **3 years**. **$32,948** will be used each year to help run our new literacy center.

Adult Literacy

$98,841 in total was allocated to the library, but will be divided over the next **3 years**. **$32,947** will be used each year to help run our new literacy center.

Lunch at the Library

$32,100 in total was given to the library. The lunch at the Library program helps libraries like ours provide free summer programs.

Zipbooks

$16,091 in total was given to the library this grant period. The Zip Books program provides library users with speedy access to books that are not available at their local library.

Hiking Backpacks

The Southern California Library Cooperative grant provided **21 hiking backpacks**. The hiking backpacks include: trekking poles, binoculars, compass, survival equipment, and various other hiking necessities.

Stargazing Kits

The California State Parks, and the California State Library provided a funding opportunity to provide stargazing kits. They will include a telescope, carrying case, portable stool, compass, flashlight, and field guides.

EL CENTRO LIBRARY

READS

LITERACY PROGRAM

The creation of the El Centro Literacy center was fully funded by a California State Library Grant totaling **$197,685**.

The grand opening of the center was on October 1st.

Currently there are 40 registered students who take classes twice a week.

There are approximately 60 people on a waitlist.

New Book Collection

As of March of 2023 a total of **5,075** items have been added to our library collection!

DVDs	162
Adult Spanish	374
Children Spanish	428
Home Schooling	40
NOLO	43

AWE Computers

The Library recently purchased 3 brand new AWE computers to replace the 13 year old AWE computers we previously had.

The AWE Station offers children a safe, standalone computer not connected to the Internet that is age-appropriate, engaging, and academically relevant for children. It is designed to support school readiness and technology access while making learning exciting and engaging.

2024 Summer Reading Program

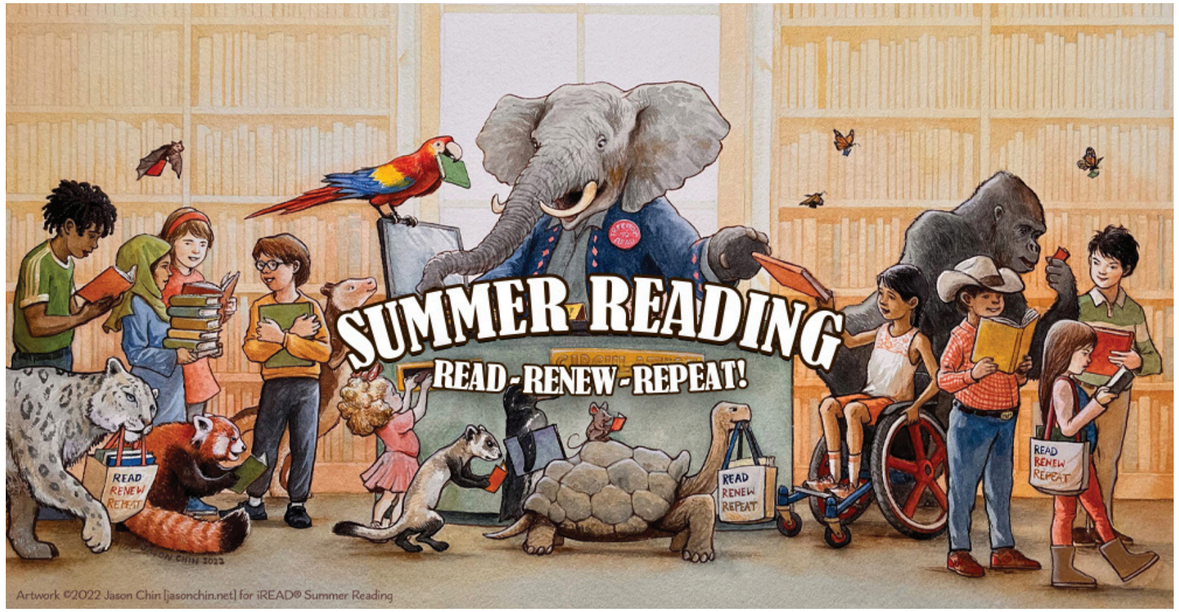

The Summer Reading Program took place from **June 17th-July 26th,** and the theme was Read, Renew, Repeat!

The attendance during the Summer Reading Program was a grand total of **39, 316.**

Adult Summer Reading Program

Sip & Paint Class

This activity took place on **June 17th**, and had a total of **25 participants.**

Vision Board Class

This activity took place on **June 24th**, and had a total of **19 participants.**

Fan Painting Class

This activity took place on **July 1st**, and had a total of **25 participants.**

Scrapbooking Class

This activity took place on **July 8th**, and had a total of **25 participants.**

Composting Class

This activity took place on **July 11th**, and had a total of **26 participants.**

Christmas in July Wreath Making

This activity took place on **July 15th**, and had a total of **27 participants.**

Sound Bath

This activity took place on **July 18th**, and had a total of **13 participants.**

Teen Summer Reading Program

Acrylic Painting Class

This activity took place on **June 17th**, and had a total off **15 participants.**

Tie Dye Class

This activity took place on **June 24th**, and had a total of **19 participants.**

Bracelet Making

This activity took place on **July 1st**, and had a total of **10 participants.**

Scrapbooking Class

This activity took place on **July 8th**, and had a total of **16 participants.**

Composting Class

This activity took place on **July 11th**, and had a total of **26 participants.**

Acrylic Paint Pour Class

This activity took place on **July 15th**, and had a total of **18 participants.**

Kids Summer Reading Program

Summer Shades Class

This activity was held on **June 20th**, and had a total of **111 participants.**

Bracelet Making

This activity was held on **June 27th,** and had a total of **90 participants.**

Clay Pot Decorating

This activity was held on **July 11th**, and had a total of **100 participants**.

Open Activities

June 21st	**42 Participants**
June 28th	**40 Participants**
July 5th	**26 Participants**
July 12th	**25 Participants**
July 19th	**25 Participants**
July 26th	**27 Participants**

Summer Reading Program Presentations

Wild Wonders

We had two different presentations by Wild Wonders at the library. The first was on **June 18th**, and had a total of **331 participants**. The second was on **July 25th**, and had a total of **188 participants.**

EC PD Obstacle Course

This activity took place on **June 20th**, and had a total of **352 participants.**

Mr. Trivia

This activity took place on **June 25th**, and had a total of **150 participants.**

EC FD Obstacle Course

This activity took on **June 27th**, and had a total of **215 participants.**

Magic Show: Arty Loon

This activity took place on **July 3rd**, and had a total of **280 participants.**

Dragon Dancers

This activity took place on **July 10th**, and had a total of **186 participants.**

Kidz Party Pals

We had two different presentations by Kidz Party Pals at the library. The first was on **June 26th**, and had a total of **370 participants**. The second was on **July 17th**, and had a total of **245 participants**.

IID: Dippy Duck

This activity took place on **July 18th**, and had a total of **101 participants.**

Dr. Seuss Family Night

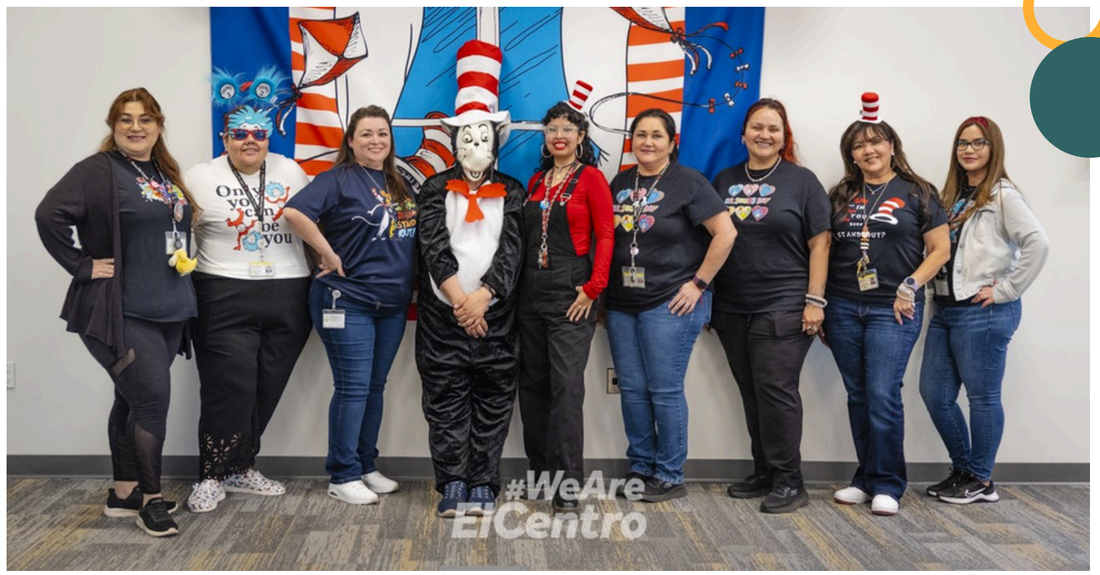

On March 3rd, 2023, and March 6th, 2024 the Library held its annual Dr. Seuss family night with a combined total of 596 participants.

Halloween Family Night

On **October 26, 2023** and **October 10, 2024** the Library hosted its annual Halloween family nights with **543** and **603** participants respectively.

Christmas Family Night

In 2023 the Library had its annual Christmas family night on December 14, and had **625 participants**.

This year the Christmas family night will be held on December 12 from 4:00pm-6:00 pm.

Reading with a Firefighter

On June 29th, 2023 the El Centro Fire Department teamed up with the library to do a program on fire safety. Not only did they do a fire safety presentation , but they also read a book titled *Fire Truck to the Rescue,* and gave a tour of their firetruck.

Reading with then Mayor

On July 20th, 2023 the Library hosted a pet food and donation drive to help the Imperial Valley Humane Society. Then Mayor Martha Cardenas-Singh was present at the event, and spoke to the public about the importance of Brinley, and read a book titled *Helping Dogs*.

Story Time with Brinley

On November 7th, 2023 the El Centro Police Department joined our story time with Brinley.

City Council of the City of El Centro
1275 W. Main Street
El Centro, CA 92243
SUBMITTED
ACTION ITEM (ID # 2024-168)

Item: 12.
Meeting: 11/5/2024 11:30 AM
Department:
Category: Informational Items
Prepared by: Norma Valenzuela, Secretarial Assistant
Department Head: Norma Valenzuela
DOC ID: 2024-168

Received and referred to Community Development Department, Application for Alcoholic Beverage License Patriot Gas Inc. 2420 S. 4TH St El Centro, CA 92243-6003

CITY MANAGER'S RECOMMENDATION:

FISCAL IMPACT:

STRATEGIC PLANNING PROGRAM 2022-2027 RELATION:

DUE DILIGENCE CHECK FOR CONTRACTORS/CONSULTANTS: DID THE DEPARTMENT VERIFY CURRENT EL CENTRO BUSINESS LICENSE, CONTRACTOR'S LICENSE, REFERENCE CHECKES, INSURANCE, ETC.:

BACKGROUND:

DISCUSSION:

CONCLUSION:

ATTACHMENTS:
1. Application for Alcoholic Beverage License Patriot Gas INC_

Department of Alcoholic Beverage Control

State of California

PCUD CITY CLERK'S
OCT 15 2024 AM11:10

APPLICATION FOR ALCOHOLIC BEVERAGE LICENSE

ABC 211 (6/99)

TO: Department of Alcoholic Beverage Control
34-160 GATEWAY DR.
STE 120
PALM DESERT, CA 92211
(760) 324-2027

File Number: **663926**
Receipt Number: **2940340**
Geographical Code: **1304**
Copies Mailed Date: **October 10, 2024**
Issued Date:

DISTRICT SERVING LOCATION: **PALM DESERT**

First Owner: **PATRIOT GAS INC**

Name of Business:

Location of Business: **2420 S 4TH ST**
EL CENTRO, CA 92243-6003

County: **IMPERIAL**

Is Premises inside city limits: **Yes**

Census Tract: **0117.00**

Mailing Address: (If different from premises address)

Type of license(s): **20**

Dropping Partner: Yes___ No___

Transferor's license/name: **516948 / 7 ELEVEN INC**

License Type	Transaction Type	Master	Secondary LT And Count
20 - Off-Sale Beer And Wine	PER	Y	

License Type	Transaction Description	Fee Code	Dup	Date	Fee
Application Fee	PERSON TO PERSON TRF	NA	0	10/10/24	$395.00
20 - Off-Sale Beer And Wine	ANNUAL FEE	NA	0	10/10/24	$470.00
				Total	$865.00

Have you ever been convicted of a felony? **No**
Have you ever violated any provisions of the Alcoholic Beverage Control Act, or regulations of the Department pertaining to the Act? **No**

STATE OF CALIFORNIA County of IMPERIAL Date: October 10, 2024

Applicant Name(s)

PATRIOT GAS INC

Old City Library Electrical Emergency Repairs

CITY MANAGER'S RECOMMENDATION:
Information item only

FISCAL IMPACT:
No impact to the General Fund. The project will be paid with budgeted Measure P funds for the demolition of Valley Center Point buildings. A total of $300,000 has been allocated for said project this fiscal year and these electrical repairs are expected to be under that amount.

STRATEGIC PLANNING PROGRAM 2022-2027 RELATION:
Environmental Sustainability & Infrastructure

DUE DILIGENCE CHECK FOR CONTRACTORS/CONSULTANTS: DID THE DEPARTMENT VERIFY CURRENT EL CENTRO BUSINESS LICENSE, CONTRACTOR'S LICENSE, REFERENCE CHECKES, INSURANCE, ETC.:
NA

BACKGROUND:
The existing electrical meter and transformers supporting the old library site is located within the old mall area of the Valley Center Point development. The electrical area has been vandalized beyond repair resulting in loss of electrical power to the old library site, including HVAC and alarm systems. For the Health and Safety of the Public, electrical power must be restored to current code standards.

Public Works has worked with a consultant to complete plans and specifications for the demolition of the Valley Center Point buildings, which includes the old Mervyn's, Miller's Outpost and center mall hallway area where the shops were located. Part of the work included relocating the power source to the old library that is to remain within the old Sears building, currently shared between the City and Imagine school. This emergency has resulted in the acceleration of the electrical relocation part of the work as power cannot be restored via the existing vandalized obsolete system.

On May 7, City Council approved an Emergency Resolution to complete the repairs to the electrical system.

DISCUSSION:
UPDATE:
Staff is currently working with IID, Tom Watson Electrical and Nicklaus Engineering to define the scope and obtain proposals for the needed repairs.

CONCLUSION:

Information Item Only

ATTACHMENTS:
None